www.bergab.ru Берг АБ bergab@ya.ru Тел. (495)-228-06-21, факс (495) 223-3071

# NON-CONTACT SEALS

GMN

www.bergab.ru Берг АБ bergab@ya.ru Тел. (495)-228-06-21, факс (495) 223-3071

www.bergab.ru Берг АБ bergab@ya.ru Тел. (495)-228-06-21, факс (495) 223-3071

## Non-Contact Seals

GMN offers two different systems of non-contact seals for wear free sealing of fast turning machine components.

The GMN labyrinth seals are made from steel and aluminium by a special and very sophisticated production process which results in absolute identity of the inner and outer rings labyrinth profile.

The GMN gap seals with return drain are made from high quality, highly resistant plastic material.

## Freewheel-Clutches

Freewheels are unidirectional couplings, transmitting or supporting torque in one direction by friction and allowing idling in the opposite direction.

GMN manufactures sprag type clutches of two different sprag sizes to be used as idexing devices, backstops or overrunning clutches.
Roller ramp supplements are available too.

## High Precision Ball Bearings

GMN produces high precision ball bearings in precision class P4 (ABEC7) or better as spindle bearings (angular contact bearings), radial deep groove ball bearings as well as hybrid bearings and special bearings.

In addition GMN offers complete bearing units.

A variety of solid lubricant coating is available for operation under vacuum.

## Spindles

GMN machine spindles represent more than 70 years of experience in development, production and application. They are used for precision as well as for HSC high-speed processing.
A close-knit network of dealers and repair service workshops guarantees comprehensive service and expert advice.

GMN optospindles, air bearings and scanners are setting new standards in image projection. They have been developed for maximum running accuracy as well as stability in rotational speed and phase.

GMN

**In Nürnberg, GMN Paul Müller Industrie GmbH & Co. KG produces with an experience of more than 90 years high precision ball bearings, machining spindles, free-wheel clutches and non-contact seals for a wide scope.**

**Most of the products are made for special applications on customer requests.**

**A world wide net of service stations support all demands of our customers.**

**GMN** is the trademark of
Paul Müller Industrie GmbH & Co. KG.

This catalog reflects the latest design features at the time of printing.
The company reserves the right to change designs and specifications at any time.

Reprint, photomechanical reproductions as well as reproduction from clippings only with license of
Paul Müller Industrie GmbH & Co. KG.

www.bergab.ru Берг АБ bergab@ya.ru Тел. (495)-228-06-21, факс (495) 223-3071

www.bergab.ru Берг АБ bergab@ya.ru Тел. (495)-228-06-21, факс (495) 223-3071

# Paul Müller Industrie GmbH & Co. KG

# Catalog
# Non Contact Seals

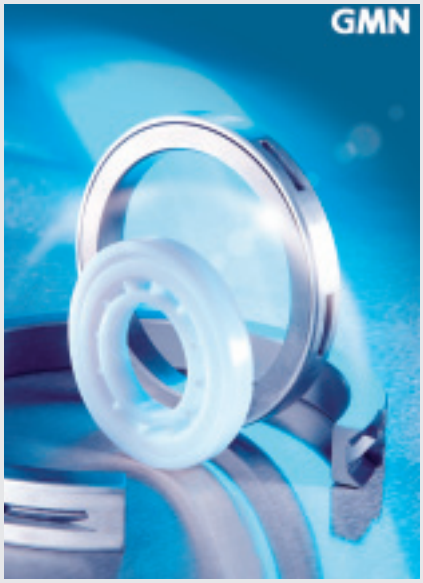


Catalogue No. 8051 05/04 E

www.bergab.ru Берг АБ bergab@ya.ru Тел. (495)-228-06-21, факс (495) 223-3071

www.bergab.ru Берг АБ bergab@ya.ru Тел. (495)-228-06-21, факс (495) 223-3071




| | |
|---|---|
| Contents – Both Systems | 4 |
| General Information – Benefits – Applications | 5 |
| Comparison of Contact Seals and Non-Contact Seals | 6 |
| General Information – Labyrinth Seals | 7 |
| General Information – Gap Seals | 9 |
| Mating Parts | 12 |
| Mounting Instructions for Both Systems | 13 |
| Table of Dimensions – Labyrinth Seals | 14 |
| Table of Dimensions – Gap Seals | 15 – 17 |
| Typical Applications | 18 – 21 |
| Tolerance Table | 22 |
| Technical Advice – The new production program | 23 |

## The GMN Labyrinth Seal

This seal is manufactured from steel and aluminium. The high accuracy of inner and outer rings labyrinth profile is achieved by a special production process. By this process, the non-separable connection of the steel inner ring and the aluminum outer ring is achieved.

## The GMN Gap Seal

It is produced of high quality plastic material, which provides remarkable resistance to a wide variety of chemicals. The material is bacteriastatic and fungistatic and therefore utilized frequently in the Food Processing Industry.

www.bergab.ru Берг АБ bergab@ya.ru Тел. (495)-228-06-21, факс (495) 223-3071

www.bergab.ru Берг АБ bergab@ya.ru Тел. (495)-228-06-21, факс (495) 223-3071



## General Information

Modern design, with respect to minimum loss of energy, requires long life and lowest power loss due to friction of all components. One of GMN's answers to this challenge is a wide range of high quality and high precision ball bearings. Another answer is producing non-contact seals of two different types.

GMN have designed complete units ready for mounting. They give economic solutions for many sealing problems, which allow non-contact sealing of rotating machine parts.

GMN Labyrinth Seals are produced from metallic material, inner ring – steel; outer ring – aluminium, by a special and patented production process, which guarantees the total identity of inner rings and outer rings labyrinth profile. Thus a highly efficient seal against splashing liquids and/or coarse and fine granular contaminants is achieved. GMN Seals can be used for many applications under extreme conditions, high speed and high temperatures. The standard model can be used up to temperatures of 170 C (340 F) at the aluminium outer ring. Temperature of the shaft and seal's inner ring may be higher. If a non-contact seal in needed for higher temperatures please contact our technical staff.

The GMN Gap Seal
For the standard model a high quality plastic material is used which provides remarkable resistance to a wide variety of chemicals. This material enables the seal to be used in a broad range of applications. It is often used in the Food Processing Industries. The plastic material which is of a high strength can be used for temperatures of –40 C to 60 C (–40 F to 140 F).

A very high accuracy of the labyrinth gap is achieved by turning the molded inner and outer ring of the seal with the same tool. The very smooth surface achieved by this turning process is a prerequisite for the high efficiency the GMN Gap Seal.

## Main benefits

**Compact design**
Dimension equal or similar to those of antifriction bearings or contact seals.

**No contact**
No wear and no heat caused by the seal. No friction power loss.

**Almost unlimited life**
No costs for maintenance and replacement.

**Low cost for mating parts and mounting fits**
Large tolerances allowed for shaft and housing. Hardening and grinding is not necessary for customers parts.

**Metallic material**
Almost no speed limit – applicable at temperatures up to 170 C (340 F)

**Plastic material up to 200 mm outer diameter of the seal**
Resistance against many types of chemicals, bacteria and fungi. Therefore GMN Gap Seals are ideal for the Food Processing Industry at temperatures up to 60 C (140 F).

**Independent from sense of rotation**
Not influenced by reversal of rotation.

**High standard sealing efficiency at reasonable cost**
Design of labyrinth gap and the above mentioned benefits allow the use of GMN Non-Contact Seals even for applications which have been solved with contact seals or with home designed, expensive, labyrinth profiles.

GMN Non-Contact Seals can be used for inner ring and/or outer ring rotation.

## Applications

GMN Non-Contact Seals are supplied to the manufacturers of the following types of machines and equipment:

- Machine Tool Industry
- Testing Equipment
- Packaging Machines
- Textile Machines
- Food Processing Machines
- Driving Units
- Mechanical Conveying Equipment

www.bergab.ru Берг АБ bergab@ya.ru Тел. (495)-228-06-21, факс (495) 223-3071

www.bergab.ru Берг АБ bergab@ya.ru Тел. (495)-228-06-21, факс (495) 223-3071



Due to technical progress nowadays it is necessary to find the best solution for every component used on newly designed machinery to save costs on energy and maintenance. An important machine element is the sealing system which has to fulfil a huge variety of requirements.

Non-Contact Seals could be used for a large number of applications. Quite often a special labyrinth seal is too expensive: It is necessary to manufacture 14 fits to get a seal with only 3 labyrinth steps and very often the mounting space of custom made labyrinth seals is very large.

The GMN Non-Contact Seal has become famous for its compact design. Please see the comparison with standard contact seals in the table below. The main benefits of GMN Non-Contact Seals are:
- Low cost
- Small mounting space
- Ease of mounting
- Reliable sealing against splashing liquids and granular contaminants.

Sometimes a combination of contact seal and non-contact seal may solve very difficult sealing problems. For example if a gear box is lubricated with large amounts of oil – oil level higher than the sealing diameter – and bearings have to be protected against very coarse contamination. For this type of application a GMN Non-Contact Seal could be used to protect the contact seal and increase the lifetime of the whole system.

## Comparison of contact seals and Non-Contact Seals

| Topic | Contact Seal-Lip Seal | Non-Contact Seal |
|---|---|---|
| Wear | sliding friction | no wear |
| Power loss | friction loss | no power loss – savings of energy, smaller driving units |
| Temperature | see diagram below | see diagram below |
| Speed limit | depending on material | High speed limit – see diagrams pages 7/8 |
| Lifetime | depending on wear | no limit for the life |
| Lubrication | at sealing location | no lubricant necessary |
| Mating parts | hardening and grinding necessary for shafts due to wear | no hardening and grinding necessary for the mating parts |
| Temperature limit | low – caused by material used: rubber or plastic | Labyrinth Seal: 170 C (340 F)<br>Gap Seal: 60 C (140 F) |
| Space requirements | small | previously: large (custom made labyrinths)<br>today: small (GMN Non-Contact Seal) |
| To be applied with | grease lubrication | grease lubrication |
| | oil lubrication | oil lubrication<br>(oil level has to be under sealing diameter) |
| | water may cause problems because water lubrication at the sealing location will increase wear | Water – if corrosion proof material is used and water level is under the sealing diameter – will cause no problems |
| | fine or coarse granular contaminants will increase wear. | fine or coarse granular contaminants can be sealed reliably. |

www.bergab.ru Берг АБ bergab@ya.ru Тел. (495)-228-06-21, факс (495) 223-3071

# Labyrinth Seals

www.bergab.ru Берг АБ bergab@ya.ru Тел. (495)-228-06-21, факс (495) 223-3071



## Design

GMN Labyrinth Seals are complete units of two rings with built in labyrinth: The inner ring is made of steel the outer ring is made of aluminium. They are ready for mounting but inseparable. The profile shows at least three labyrinth peaks. Standard models are supplied with widths of 10, 15 and 20 mm depending on seal diameter. For a wide range of applications GMN offers two different designs:

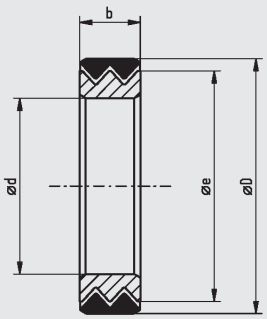


*Figure 1*

The basic “L” Type against coarse and fine granular contamination and light splashing liquids.

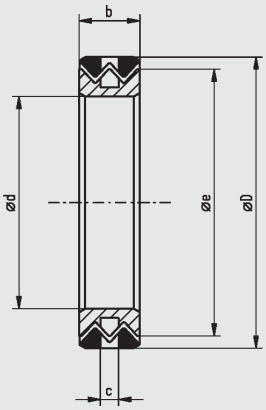


*Figure 2*

The “M”-Type against coarse and fine granular contamination and heavy splashing liquids.

The "M” Type seal is designed with peripheral grooves which allow liquids splashed into the first labyrinth gap to be centrifuged into a circular groove of customers mating part. The liquid may flow back via a drain hole to the reservoir or to the outside. The correct dimensioning of the circular groove and the drain hole is a necessary requirement for high sealing efficiency.

The maximum efficiency of non-contact seals is achieved during rotation. When heavy splashing liquids are expected while machine parts are stationary care should be taken that splashing directly onto the seal does not occur. This could be achieved easily by a disc or a shield which should be mounted on the shaft. Please see also pages 14 to 17 for more details and examples.

## Labyrinth Gap

The precision of the rings and accuracy of the gap are essential for the efficiency of the seal which could be guaranteed for every single GMN Labyrinth Seal with a special production process.

The catalog information on axial end play “Sa” in the tables refers to the total axial movement of the seal’s inner and outer ring in relation to each other; from one end position to the other. Normally the seal should be installed in flush position - thus the axial allowance would be half the value in either direction. Axial and radial clearance are almost of the same size, and do interfere each other.

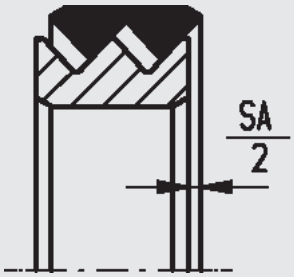


*Figure 3*

Axial end play

## Special Designs

An additional solution for high requirements of axial clearance can be offered by special produced seals with increased end play by factor 1.5. If aggressive of corrosive mediums have to be sealed GMN labyrinth seals could be made from different materials. Please contact our technical staff at the earliest stage of your design to discuss solutions.

## Speed Limit

GMN Labyrinth seals are pressed onto the shaft with a certain press fit. Due to centrifugal forces the inner ring could lift off of the shaft. The diagram below shows the speed limit depending on the size.

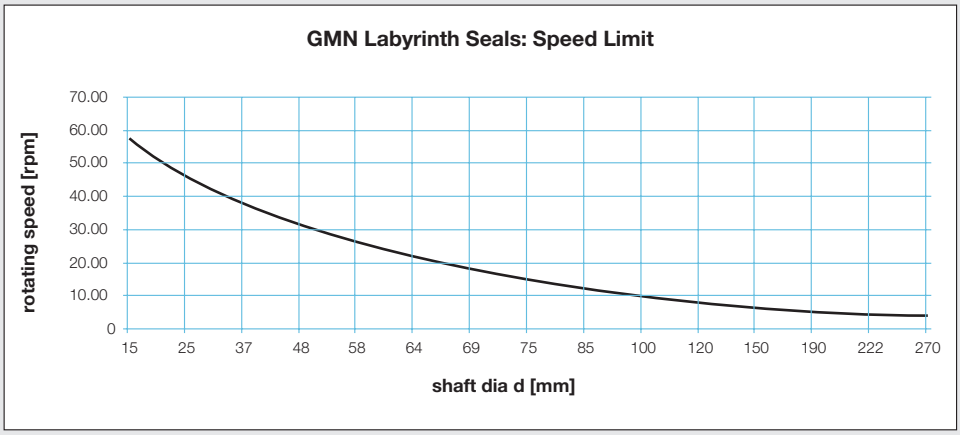


www.bergab.ru Берг АБ bergab@ya.ru Тел. (495)-228-06-21, факс (495) 223-3071

# Gap Seals

www.bergab.ru Берг АБ bergab@ya.ru Тел. (495)-228-06-21, факс (495) 223-3071



### Design
The GMN Gap Seal is mounted from two plastic parts, which create a zig zag shaped gap based on a conic envelope, thus the diameter of the sealing gaps are increased step by step from e1 on the dry side to e2 on the side facing the contaminant. Peaks and valleys of the inner and outer rings profiles (turned by the same tool) merge with each other so that they may be snapped together during the mounting process at GMN but are shipped as an inseparable unit.

Material: Polyacetal resin TK – AD;
Delrin 100
Temperature limits:
–40 C to 60 C
–40 F to 140 F.

### Chemical Resistance
The acetalresin our seals are made of is resistant against a large variety of chemicals as: the most of the common organic solvents, alcoholes, esters, ketones, aliphatic and aromatic hydrocarbonats, greases and oils. Alcaloid water and base even at higher temperature do not harm the material.
On the other hand this material may not be used to seal against oxidators and organic and anorganic acids (pH < 4).
Another advantage of this material is the very low value of water pickup (max. 0.8%).
Detailed information about the resistance against certain chemicals could be found in the internet in the section seals/gap seals/technology: www.gmn.de

### Sealing principle
The basic principle of a labyrinth seal is based on the geometric shape of the labyrinth which causes some turns of the contaminant on its way to penetrate the seal. With the GMN Gap Seal the efficiency of the centrifugal force to accelerate the contaminant radially to throw it away from the sealing gap is increased by the conic envelope of the labyrinth. To penetrate the seal the contaminant has to overcome the centrifugal force by creeping from the larger labyrinth diameter facing the contaminant to the smaller diameter on the “dry” side of the seal. Particles penetrating the first steps of the conic labyrinth are expelled by the centrifugal force and led back to the side of the seal facing the contaminant.

There is no chance for a Gap Seal to protect against higher liquid levels and a pressure gradient between inside and outside of a Non-Contact Seal. Pressure gradients may be reduced or throttled but not sealed.

### The right mounting direction
Care should be taken to install the Gap Seal the right way – the larger labyrinth diameter has to point to the contaminant.

### Axial and radial clearance
The axial end play refers to the total axial movement of the seal’s inner and outer ring in relation to each other; from one end position to the other. Axial and radial clearance of the seal are almost the same – approximately 0.5 mm. Both interfere each other. Normally the seal should be installed in flush position – thus the axial allowance would be half the value in either direction.

### Protection against dust
For this type of requirement the Gap Seal may be filled with grease before the mounting to increase the sealing efficiency against dusty environment. Please mark your order “pre-greased”. A certain amount of the grease may be moved out

### Heavy splashing liquids
There should be enough free space in front of the seal to allow free dropping or flowing of the splashing liquid. – In addition the “Sa Type” for rotating shafts or the “Si Type” for rotating housings could be used.

### Speed Limit
GMN Labyrinth seals are pressed onto the shaft with a certain press fit. Due to centrifugal forces the inner ring could lift off of the shaft. The diagram below shows the speed limit depending on the size.

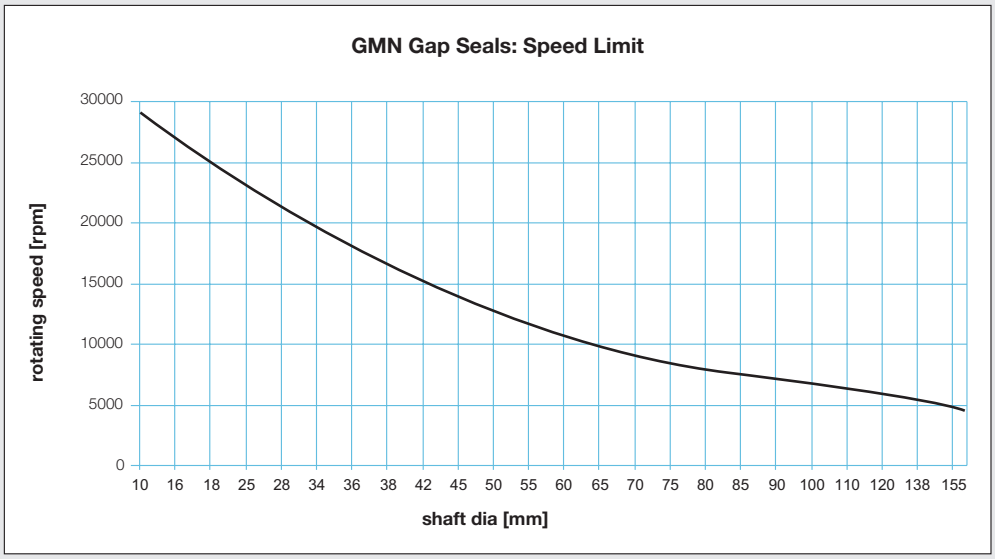


www.bergab.ru Берг АБ bergab@ya.ru Тел. (495)-228-06-21, факс (495) 223-3071

www.bergab.ru Берг АБ bergab@ya.ru Тел. (495)-228-06-21, факс (495) 223-3071



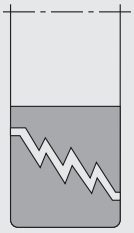

*Figure 4*

## Type Ⓢ

This is the basic design which can be used against light splashing of liquids and/or fine or coarse granular contamination. For either inner ring rotation or outer ring rotation.

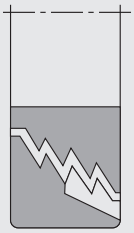

*Figure 5*

## Type Ⓢa

This design with a drain at the outer ring can be used against heavy splashing of liquids and/or fine or coarse granular contaminants.
**For inner ring rotation only!**

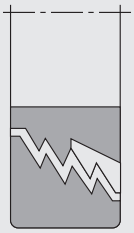

*Figure 6*

## Type Ⓢi

This design with a drain at the inner ring can be used against heavy splashing of liquids and/or fine or coarse granular contaminants.
**For outer ring rotation only!**

The three drawings shown above are guides for the best choice of GMN Gap Seals. The most efficient design depends on whether the shaft of the housing rotates.

## Mounting instructions

One of the prerequisites for the best performance of the seal is the correct mounting of the seal. Below we list some guidelines.

**Mounting Position**
It is very important that the GMN Gap Seal is mounted correctly. The bigger labyrinth diameter must be pointing to the contaminant. If the seal is used for two sealing functions to prevent infiltration of contaminants into a unit and to retain the lubricant inside the unit, two GMN Gap Seals should be used in opposite directions. A spacing ring between the two inner rings would be necessary. Minimum width of spacing ring is 2 mm.
See page 20, figure 21.
With the Ⓢa Type and the ⓈiType care should be taken that the built in drain is at the lowest point of the stationary part of the GMN Gap Seal.

**Radial Clearance**
Loose radial clearance must be avoided by accurate bearing support. Out of roundness of shafts and housings have a large influence on the sealing function – they must be kept to a minimum.

**Axial Clearance**
GMN Gap Seals allow an axial clearance of .5 mm (.020 inch) in total that means .25 mm (.010 inch) in each direction from the flush position of the inner and outer rings of the seal.

**Axial Wobbling**
To prevent axial wobbling of the rotating ring it should be mounted against a shoulder. The shoulder should be square to the shaft and be within a close tolerance.

## Material

The high quality plastic material used for the standard model of GMN Gap Seals is well known for its stability and chemical resistance in a large number of applications in the capital goods and consumer goods industries. Due to its resistance to bacteria and fungi this material can be used in Food Processing and Food Conveying Industries.

The temperature range for using this material covers –40 C (-40 F) and +60 C (140 F).

The chemical resistance includes for example:
alcohol's, aldehydes, esters, ethers, hydrocarbons (motor oils, gasoline), agricultural chemicals, weak acids and bases.
For extremely high temperatures and/or speeds the inner ring could be made from a different material (plastic or metallic).

## Special – customer oriented seals

On request we will be pleased to suggest and produce special seals for special applications, e.g. special dimensions. For slightly higher temperatures than the limit of 60 C up to 80 C (175 F/194 F) we offer a special design with "O"-rings at the inner and/or outer ring to increase the reliability of the press fit. Please contact our technical staff at no obligation.

*Figure 7*

For some applications the efficiency of GMN Gap Seal Ⓢ Type is increased when filled with grease. This greasing can be done at the GMN plant. Please mark your order "pregreased".

Also state the brand name if a special grease is needed depending on your contaminant.

Pregreasing is possible for GMN Gap Seal Ⓢ Type only.

www.bergab.ru Берг АБ bergab@ya.ru Тел. (495)-228-06-21, факс (495) 223-3071

www.bergab.ru Берг АБ bergab@ya.ru Тел. (495)-228-06-21, факс (495) 223-3071



## Mating Parts

The dimensions of GMN Non-Contact Seals are close to antifriction bearing or contact seal standards. On request we will produce seals with special dimensions. If in doubt please contact our technical staff.

Contact seals, especially at higher speeds require hardening of the shaft as well as a high surface finish at the sealing location. With the use of GMN Non-Contact Seals, hardening and grinding of the mating parts is not necessary. Tolerances of the seal have been designed so that mounting fits usual for antifriction bearings can be accepted.

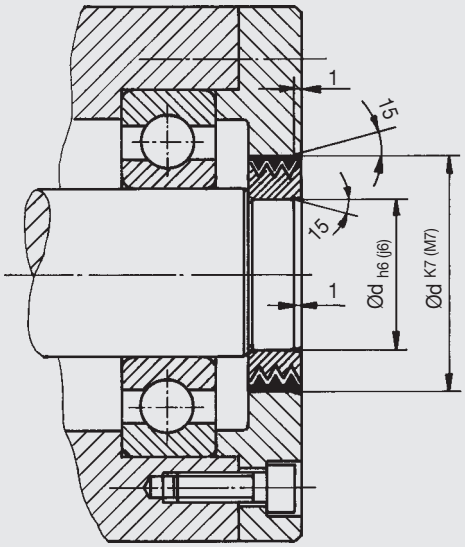


*Fig. 8*

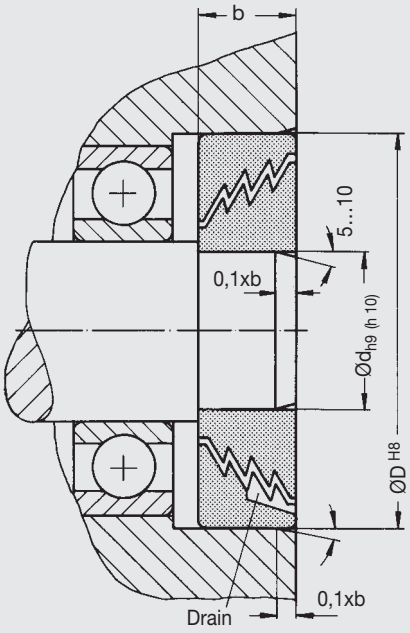


*Fig. 9*

## Mounting fits

For **GMN Labyrinth Seals:**

| | |
|---|---|
| Housing | K7 |
| Shaft | h6 |

In any event the necessary press fit will be obtained. Additional bonding elements normally will not be necessary.

If it's necessary to decrease the press fit due to the design of the whole assembly, fits H7, G7 respectively g6 and f7 can be used. With these fits industrial glues for additional bonding of the GMN Labyrinth Seal onto the shaft and into the housing should be used. Surface finish $R_Z \leq 6{,}3$ µm. The outer ring might be 0,1 mm wider than the inner ring.

For **GMN Gap Seals** the following mounting fits are required:

| | |
|---|---|
| Housing | H7 |
| Shaft | h7 |
| Surface finish | $R_Z \leq 6.3$ µm |

The length "l" of the chamfered edge of shaft or housing depends on the width "b" of the seal. L = 0,1 x b.

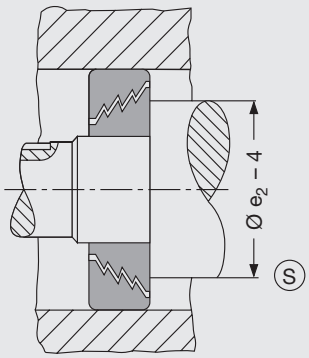


*Fig. 10a*

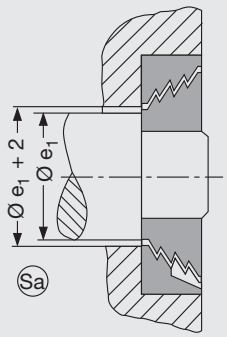


*Fig. 10b*

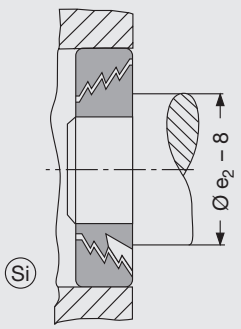


*Fig. 10c*

**Mounting Dimensions**
The drawings left are a guide for the design of mating parts. To achieve the best function of GMN Gap Seals the connecting diameters should not exceed minimum or maximum sizes.

www.bergab.ru Берг АБ bergab@ya.ru Тел. (495)-228-06-21, факс (495) 223-3071

www.bergab.ru Берг АБ bergab@ya.ru Тел. (495)-228-06-21, факс (495) 223-3071



## Mounting Instructions

One of the most important requirements for the mounting of GMN Labyrinth Seals is to guarantee wobble free running of the inner ring. Therefore we recommend that the inner ring should be pressed against a solid shoulder of the shaft as shown in the section “Typical Applications” see page 18, figure 14. The shoulder and the shaft must be square and within a close tolerance. Three different methods which are commonly used for mounting are shown below.

**Method I**
(Face mounting position)
For these applications we recommend mounting by a mounting bushing, which covers the inner and outer ring, see figure 4. Due to the fact that both rings are almost of the same width they will be located in the working position after mounting. The difference of width, 0.1 mm in total, does not matter for normal applications. The outer ring will be, at maximum, 0.1 mm wider than the inner ring.

For high precision units or when axial clearance has to be used totally a recess could be a machined on the mounting bushing and thus put the two rings into the position required.

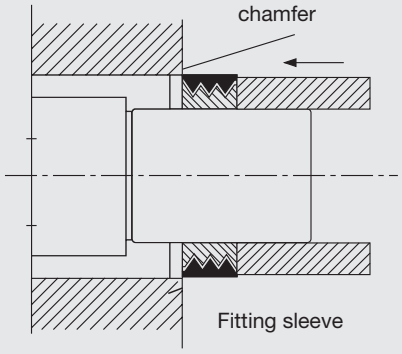


*Fig. 11*

With the GMN Gap-Seals basically the same mounting instructions are applicable. The only difference would be the fact that both – inner and outer ring – are of the same width.

**Method II**
(Mounting position inside the unit)
For assemblies where face mounting is not possible due to the design, GMN- Labyrinth Seals my be installed the following way, see figures 12a, 12b, 12c.

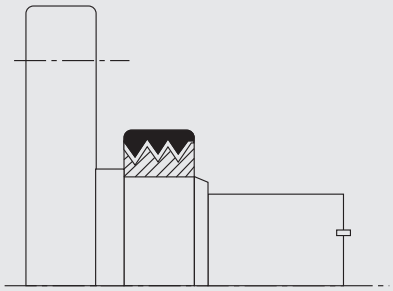

*Fig. 12a*

GMN Labyrinth Seal preassembled on the shaft.

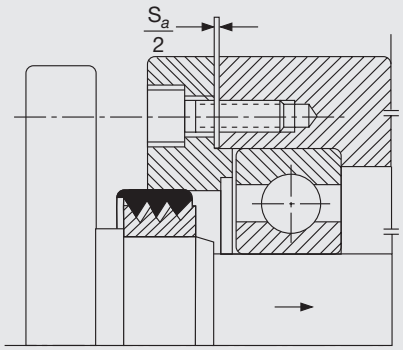


*Fig. 12b*

The shaft is slowly pushed into the bearing housing. The bearing flange is held in the correct position by a split shim of width Sa/2.

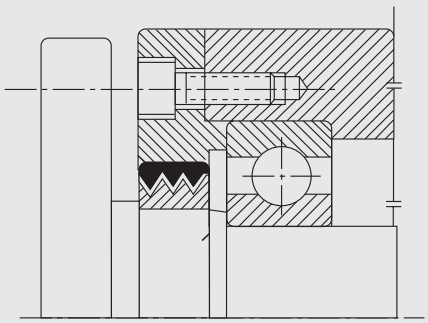

*Fig. 12c*

The shim is removed and the flange is fixed by screws. Now the labyrinth ring is installed in the correct position for operation.

**Method III**
This method can be used when neither face mounting nor preassembly on the shaft is possible, see figures 13a and 13b.

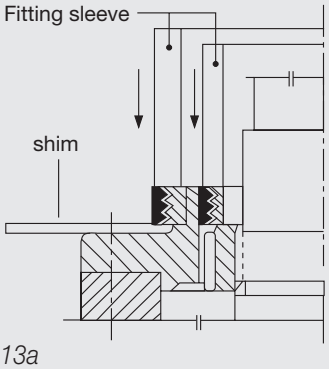


*Fig. 13a*

GMN Labyrinth Seal preassembled inside the housing flange.

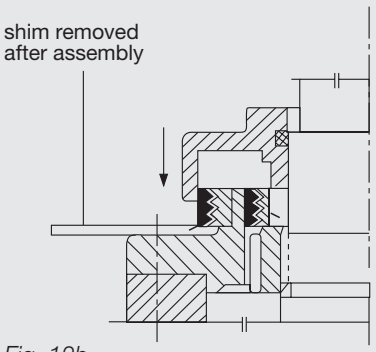


*Fig. 13b*

The shaft is slowly pushed into the bearing’s housing while the outer ring of the labyrinth seal is held in the right position by a split shim of high accuracy.
After mounting the shim is removed and both rings of the seal are in the correct position.

www.bergab.ru Берг АБ bergab@ya.ru Тел. (495)-228-06-21, факс (495) 223-3071

www.bergab.ru Берг АБ bergab@ya.ru Тел. (495)-228-06-21, факс (495) 223-3071



## Type »L«

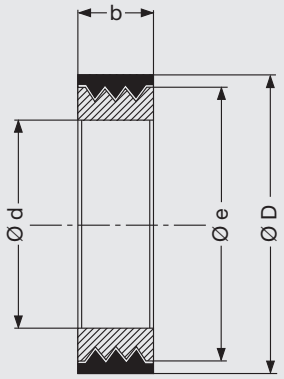


For sealing against coarse or fine granular contaminants and light splashing liquids.

## Type »M«

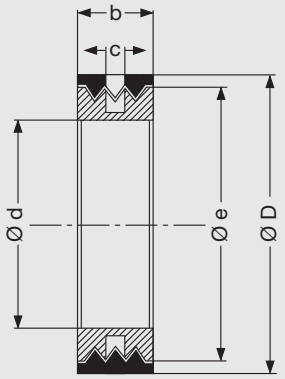


For sealing against coarse or fine granular contaminants and heavy splashing liquids.

Simply specify seal type and dimensions.

Special dimensions on request.

$S_a$ = end play in mounted position (total axial movement of both rings from one end position to the other)

| Type »L« »M« | d mm | D mm | b mm | c mm | e mm | $S_a$ mm |
|---|---|---|---|---|---|---|
| 15 x 26 x 8 | 15 | 26 | 8 | 2,5 | 24 | 0,35 |
| 18 x 28 x 10 | 18 | 28 | 10 | 3 | 26 | 0,38 |
| 20 x 28 x 10 | 20 | 28 | 10 | 3 | 26 | 0,38 |
| 20 x 30 x 10 | 20 | 30 | 10 | 3 | 28 | 0,38 |
| 22 x 30 x 10 | 22 | 30 | 10 | 3 | 28 | 0,38 |
| 25 x 37 x 10 | 25 | 37 | 10 | 3 | 34 | 0,38 |
| 28 x 39 x 10 | 28 | 39 | 10 | 3 | 36 | 0,38 |
| 30 x 42 x 10 | 30 | 42 | 10 | 3 | 39 | 0,38 |
| 32 x 45 x 10 | 32 | 45 | 10 | 3 | 42 | 0,4 |
| 35 x 47 x 10 | 35 | 47 | 10 | 3 | 44 | 0,4 |
| 40 x 52 x 10 | 40 | 52 | 10 | 3 | 49 | 0,4 |
| 42 x 55 x 10 | 42 | 55 | 10 | 3 | 52 | 0,4 |
| 45 x 55 x 10 | 45 | 55 | 10 | 3 | 52 | 0,4 |
| 45 x 62 x 10 | 45 | 62 | 10 | 3 | 59 | 0,4 |
| 48 x 62 x 10 | 48 | 62 | 10 | 3 | 59 | 0,4 |
| 50 x 62 x 10 | 50 | 62 | 10 | 3 | 59 | 0,4 |
| 52 x 68 x 10 | 52 | 68 | 10 | 3 | 65 | 0,4 |
| 55 x 68 x 10 | 55 | 68 | 10 | 3 | 65 | 0,4 |
| 58 x 72 x 10 | 58 | 72 | 10 | 3 | 68,5 | 0,4 |
| 60 x 72 x 10 | 60 | 72 | 10 | 3 | 68,5 | 0,4 |
| 60 x 80 x 10 | 60 | 80 | 10 | 3 | 76 | 0,4 |
| 63 x 80 x 10 | 63 | 80 | 10 | 3 | 76 | 0,4 |
| 65 x 80 x 10 | 65 | 80 | 10 | 3 | 76 | 0,4 |
| 65 x 85 x 10 | 65 | 85 | 10 | 3 | 81 | 0,42 |
| 68 x 85 x 10 | 68 | 85 | 10 | 3 | 81 | 0,42 |
| 70 x 85 x 10 | 70 | 85 | 10 | 3 | 81 | 0,42 |
| 70 x 90 x 10 | 70 | 90 | 10 | 3 | 86 | 0,42 |
| 72 x 90 x 10 | 72 | 90 | 10 | 3 | 86 | 0,42 |
| 75 x 90 x 10 | 75 | 90 | 10 | 3 | 86 | 0,42 |
| 80 x 100 x 10 | 80 | 100 | 10 | 3 | 95 | 0,42 |
| 90 x 110 x 10 | 90 | 110 | 10 | 3 | 105 | 0,42 |
| 100 x 120 x 10 | 100 | 120 | 10 | 3 | 115 | 0,42 |

| Type »L« »M« | d mm | D mm | b mm | c mm | e mm | $S_a$ mm |
|---|---|---|---|---|---|---|
| 100 x 120 x 14 | 100 | 120 | 14 | 4 | 115 | 0,7 |
| 110 x 130 x 15 | 110 | 130 | 15 | 5 | 125 | 0,7 |
| 120 x 140 x 15 | 120 | 140 | 15 | 5 | 135 | 0,7 |
| 130 x 150 x 15 | 130 | 150 | 15 | 5 | 145 | 0,7 |
| 140 x 170 x 15 | 140 | 170 | 15 | 5 | 165 | 0,7 |
| 150 x 180 x 15 | 150 | 180 | 15 | 5 | 175 | 0,7 |
| 160 x 190 x 20 | 160 | 190 | 20 | 5 | 184,5 | 0,8 |
| 170 x 210 x 20 | 170 | 210 | 20 | 5 | 204,5 | 0,8 |
| 180 x 210 x 20 | 180 | 210 | 20 | 5 | 204,5 | 0,8 |
| 190 x 230 x 20 | 190 | 230 | 20 | 5 | 224,5 | 0,8 |
| 200 x 230 x 20 | 200 | 230 | 20 | 5 | 224,5 | 0,8 |
| 210 x 250 x 22 | 210 | 250 | 22 | 5 | 244,5 | 1,0 |
| Special sizes for spindle noses | | | | | | |
| 69,83 x 85 x 10 | 69,83 | 85 | 10 | 3 | 81 | 0,42 |
| 88,88 x 108 x 10 | 88,88 | 108 | 10 | 3 | 103 | 0,42 |
| 101,60 x 120 x 10 | 101,60 | 120 | 10 | 3 | 115 | 0,42 |

**Mounting fits:**
Housing K7
Shaft h6
See tolerance table page 22.

**Remark:** Mounting fits H7; G7 respectively g6, f7, can be used, but then the GMN Labyrinth Seal should be fixed with special industrial glue (e.g. Loctite) into the housing and onto the shaft.

Design and dimensions are subject to changes.

www.bergab.ru Берг АБ bergab@ya.ru Тел. (495)-228-06-21, факс (495) 223-3071

www.bergab.ru Берг АБ bergab@ya.ru Тел. (495)-228-06-21, факс (495) 223-3071



Simply specify seal type and dimensions.

Special dimensions on request.

$S_a$ = end play in mounted position (total axial movement of both rings from one end position to the other)

$S_a$ = 0.5 mm (0.02") for all sizes

Dimensions

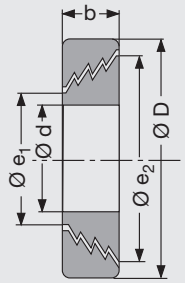


Mounting Dimensions

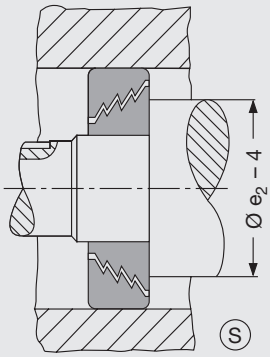


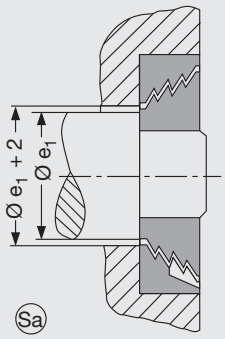


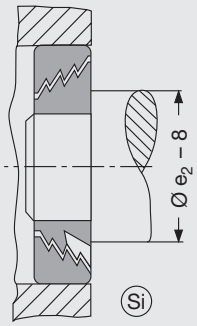


| Type Ⓢ – Ⓢa – Ⓢi | d mm | D mm | b mm | $e_1$ mm | $e_2$ mm |
|---|---|---|---|---|---|
| 10 x 30 x 10 | 10 | 30 | 10 | 14 | 25 |
| 10 x 32 x 10 | 10 | 32 | 10 | 14 | 25 |
| 12 x 30 x 10 | 12 | 30 | 10 | 14 | 25 |
| 12 x 32 x 10 | 12 | 32 | 10 | 14 | 25 |
| 12 x 35 x 10 | 12 | 35 | 10 | 19 | 30 |
| 12 x 37 x 10 | 12 | 37 | 10 | 19 | 30 |
| 15 x 35 x 10 | 15 | 35 | 10 | 19 | 30 |
| 15 x 37 x 10 | 15 | 37 | 10 | 19 | 30 |
| 15 x 40 x 10 | 15 | 40 | 10 | 24 | 35 |
| 15 x 42 x 10 | 15 | 42 | 10 | 24 | 35 |
| 16 x 35 x 10 | 16 | 35 | 10 | 19 | 30 |
| 16 x 37 x 10 | 16 | 37 | 10 | 19 | 30 |
| 16 x 40 x 10 | 16 | 40 | 10 | 24 | 35 |
| 16 x 42 x 10 | 16 | 42 | 10 | 24 | 35 |
| 17 x 35 x 10 | 17 | 35 | 10 | 19 | 30 |
| 17 x 37 x 10 | 17 | 37 | 10 | 19 | 30 |
| 17 x 40 x 10 | 17 | 40 | 10 | 24 | 35 |
| 17 x 42 x 10 | 17 | 42 | 10 | 24 | 35 |
| 17 x 47 x 10 | 17 | 47 | 10 | 31 | 42 |
| 17 x 52 x 10 | 17 | 52 | 10 | 31 | 42 |
| 18 x 40 x 10 | 18 | 40 | 10 | 24 | 35 |
| 18 x 42 x 10 | 18 | 42 | 10 | 24 | 35 |
| 20 x 40 x 10 | 20 | 40 | 10 | 24 | 35 |
| 20 x 42 x 10 | 20 | 42 | 10 | 24 | 35 |
| 20 x 47 x 10 | 20 | 47 | 10 | 31 | 42 |
| 20 x 52 x 10 | 20 | 52 | 10 | 31 | 42 |
| 22 x 40 x 10 | 22 | 40 | 10 | 24 | 35 |
| 22 x 42 x 10 | 22 | 42 | 10 | 24 | 35 |
| 22 x 47 x 10 | 22 | 47 | 10 | 31 | 42 |
| 22 x 52 x 10 | 22 | 52 | 10 | 31 | 42 |
| 25 x 47 x 10 | 25 | 47 | 10 | 31 | 42 |
| 25 x 52 x 10 | 25 | 52 | 10 | 31 | 42 |
| 25 x 62 x 10 | 25 | 62 | 10 | 46 | 57 |
| 25 x 65 x 10 | 25 | 65 | 10 | 46 | 57 |
| 26 x 47 x 10 | 26 | 47 | 10 | 31 | 42 |
| 26 x 52 x 10 | 26 | 52 | 10 | 31 | 42 |
| 27 x 47 x 10 | 27 | 47 | 10 | 31 | 42 |
| 27 x 52 x 10 | 27 | 52 | 10 | 31 | 42 |
| 28 x 47 x 10 | 28 | 47 | 10 | 31 | 42 |
| 28 x 52 x 10 | 28 | 52 | 10 | 31 | 42 |

| Type Ⓢ – Ⓢa – Ⓢi | d mm | D mm | b mm | $e_1$ mm | $e_2$ mm |
|---|---|---|---|---|---|
| 28 x 62 x 10 | 28 | 62 | 10 | 46 | 57 |
| 28 x 65 x 10 | 28 | 65 | 10 | 46 | 57 |
| 30 x 62 x 10 | 30 | 62 | 10 | 46 | 57 |
| 30 x 65 x 10 | 30 | 65 | 10 | 46 | 57 |
| 30 x 68 x 10 | 30 | 68 | 10 | 47 | 62 |
| 30 x 72 x 10 | 30 | 72 | 10 | 47 | 62 |
| 30 x 75 x 10 | 30 | 75 | 10 | 47 | 62 |
| 32 x 62 x 10 | 32 | 62 | 10 | 46 | 57 |
| 32 x 65 x 10 | 32 | 65 | 10 | 46 | 57 |
| 34 x 62 x 10 | 34 | 62 | 10 | 46 | 57 |
| 34 x 65 x 10 | 34 | 65 | 10 | 46 | 57 |
| 35 x 62 x 10 | 35 | 62 | 10 | 46 | 57 |
| 35 x 65 x 10 | 35 | 65 | 10 | 46 | 57 |
| 35 x 68 x 10 | 35 | 68 | 10 | 47 | 62 |
| 35 x 72 x 10 | 35 | 72 | 10 | 47 | 62 |
| 35 x 75 x 10 | 35 | 75 | 10 | 47 | 62 |
| 35 x 80 x 10 | 35 | 80 | 10 | 60 | 74 |
| 35 x 85 x 10 | 35 | 85 | 10 | 60 | 74 |
| 35 x 90 x 10 | 35 | 90 | 10 | 60 | 74 |
| 36 x 62 x 10 | 36 | 62 | 10 | 46 | 57 |
| 36 x 65 x 10 | 36 | 65 | 10 | 46 | 57 |
| 36 x 68 x 10 | 36 | 68 | 10 | 47 | 62 |
| 36 x 72 x 10 | 36 | 72 | 10 | 47 | 62 |
| 36 x 75 x 10 | 36 | 75 | 10 | 47 | 62 |
| 37 x 62 x 10 | 37 | 62 | 10 | 46 | 57 |
| 37 x 65 x 10 | 37 | 65 | 10 | 46 | 57 |
| 38 x 62 x 10 | 38 | 62 | 10 | 46 | 57 |
| 38 x 65 x 10 | 38 | 65 | 10 | 46 | 57 |
| 38 x 68 x 10 | 38 | 68 | 10 | 47 | 62 |
| 38 x 72 x 10 | 38 | 72 | 10 | 47 | 62 |
| 38 x 75 x 10 | 38 | 75 | 10 | 47 | 62 |
| 40 x 62 x 10 | 40 | 62 | 10 | 46 | 57 |
| 40 x 65 x 10 | 40 | 65 | 10 | 46 | 57 |
| 40 x 68 x 10 | 40 | 68 | 10 | 47 | 62 |
| 40 x 72 x 10 | 40 | 72 | 10 | 47 | 62 |
| 40 x 75 x 10 | 40 | 75 | 10 | 47 | 62 |
| 40 x 80 x 10 | 40 | 80 | 10 | 60 | 74 |
| 40 x 85 x 10 | 40 | 85 | 10 | 60 | 74 |
| 40 x 90 x 10 | 40 | 90 | 10 | 60 | 74 |

Mounting fits see page 12 – Tolerance Table page 22.

www.bergab.ru Берг АБ bergab@ya.ru Тел. (495)-228-06-21, факс (495) 223-3071

www.bergab.ru Берг АБ bergab@ya.ru Тел. (495)-228-06-21, факс (495) 223-3071



Simply specify seal type and dimensions.

Special dimensions on request.

$S_a$ = end play in mounted position (total axial movement of both rings from one end position to the other)

$S_a$ = 0.5 mm (0.02") for all sizes

Dimensions

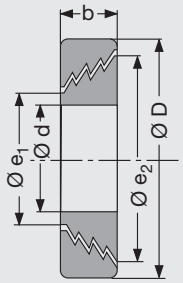


Mounting Dimensions

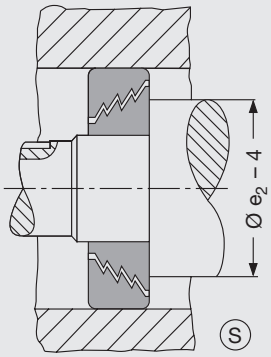


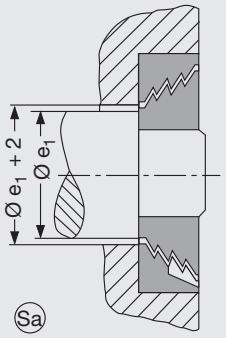


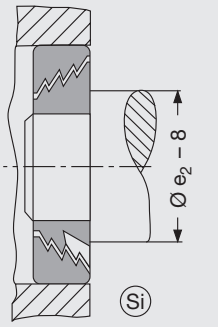


| Type Ⓢ – Ⓢa – Ⓢi | d mm | D mm | b mm | $e_1$ mm | $e_2$ mm |
|---|---|---|---|---|---|
| 42 x 62 x 10 | 42 | 62 | 10 | 46 | 57 |
| 42 x 65 x 10 | 42 | 65 | 10 | 46 | 57 |
| 42 x 68 x 10 | 42 | 68 | 10 | 47 | 62 |
| 42 x 72 x 10 | 42 | 72 | 10 | 47 | 62 |
| 42 x 75 x 10 | 42 | 75 | 10 | 47 | 62 |
| 44 x 62 x 10 | 44 | 62 | 10 | 46 | 57 |
| 44 x 65 x 10 | 44 | 65 | 10 | 46 | 57 |
| 45 x 80 x 10 | 45 | 80 | 10 | 60 | 74 |
| 45 x 85 x 10 | 45 | 85 | 10 | 60 | 74 |
| 45 x 90 x 10 | 45 | 90 | 10 | 60 | 74 |
| 45 x 95 x 12 | 45 | 95 | 12 | 72 | 89 |
| 45 x 100 x 12 | 45 | 100 | 12 | 72 | 89 |
| 48 x 80 x 10 | 48 | 80 | 10 | 60 | 74 |
| 48 x 85 x 10 | 48 | 85 | 10 | 60 | 74 |
| 48 x 90 x 10 | 48 | 90 | 10 | 60 | 74 |
| 50 x 80 x 10 | 50 | 80 | 10 | 60 | 74 |
| 50 x 85 x 10 | 50 | 85 | 10 | 60 | 74 |
| 50 x 90 x 10 | 50 | 90 | 10 | 60 | 74 |
| 50 x 95 x 12 | 50 | 95 | 12 | 72 | 89 |
| 50 x 100 x 12 | 50 | 100 | 12 | 72 | 89 |
| 50 x 110 x 12 | 50 | 110 | 12 | 87 | 104 |
| 50 x 115 x 12 | 50 | 115 | 12 | 87 | 104 |
| 52 x 80 x 10 | 52 | 80 | 10 | 60 | 74 |
| 52 x 85 x 10 | 52 | 85 | 10 | 60 | 74 |
| 52 x 90 x 10 | 52 | 90 | 10 | 60 | 74 |
| 55 x 80 x 10 | 55 | 80 | 10 | 60 | 74 |
| 55 x 85 x 10 | 55 | 85 | 10 | 60 | 74 |
| 55 x 90 x 10 | 55 | 90 | 10 | 60 | 74 |
| 55 x 95 x 12 | 55 | 95 | 12 | 72 | 89 |
| 55 x 100 x 12 | 55 | 100 | 12 | 72 | 89 |
| 55 x 120 x 15 | 55 | 120 | 15 | 96 | 114 |
| 55 x 125 x 15 | 55 | 125 | 15 | 96 | 114 |
| 55 x 130 x 15 | 55 | 130 | 15 | 96 | 114 |
| 56 x 80 x 10 | 56 | 80 | 10 | 60 | 74 |
| 56 x 85 x 10 | 56 | 85 | 10 | 60 | 74 |
| 56 x 90 x 10 | 56 | 90 | 10 | 60 | 74 |
| 60 x 95 x 12 | 60 | 95 | 12 | 72 | 89 |
| 60 x 100 x 12 | 60 | 100 | 12 | 72 | 89 |
| 60 x 110 x 12 | 60 | 110 | 12 | 87 | 104 |
| 60 x 115 x 12 | 60 | 115 | 12 | 87 | 104 |

| Type Ⓢ – Ⓢa – Ⓢi | d mm | D mm | b mm | $e_1$ mm | $e_2$ mm |
|---|---|---|---|---|---|
| 60 x 120 x 15 | 60 | 120 | 15 | 96 | 114 |
| 60 x 125 x 15 | 60 | 125 | 15 | 96 | 114 |
| 60 x 130 x 15 | 60 | 130 | 15 | 96 | 114 |
| 62 x 95 x 12 | 62 | 95 | 12 | 72 | 89 |
| 62 x 100 x 12 | 62 | 100 | 12 | 72 | 89 |
| 65 x 95 x 12 | 65 | 95 | 12 | 72 | 89 |
| 65 x 100 x 12 | 65 | 100 | 12 | 72 | 89 |
| 65 x 120 x 15 | 65 | 120 | 15 | 96 | 114 |
| 65 x 125 x 15 | 65 | 125 | 15 | 96 | 114 |
| 65 x 130 x 15 | 65 | 130 | 15 | 96 | 114 |
| 65 x 140 x 15 | 65 | 140 | 15 | 116 | 134 |
| 65 x 145 x 15 | 65 | 145 | 15 | 116 | 134 |
| 67 x 110 x 12 | 67 | 110 | 12 | 87 | 104 |
| 67 x 115 x 12 | 67 | 115 | 12 | 87 | 104 |
| 68 x 95 x 12 | 68 | 95 | 12 | 72 | 89 |
| 68 x 100 x 12 | 68 | 100 | 12 | 72 | 89 |
| 70 x 110 x 12 | 70 | 110 | 12 | 87 | 104 |
| 70 x 115 x 12 | 70 | 115 | 12 | 87 | 104 |
| 70 x 120 x 15 | 70 | 120 | 15 | 96 | 114 |
| 70 x 125 x 15 | 70 | 125 | 15 | 96 | 114 |
| 70 x 130 x 15 | 70 | 130 | 15 | 96 | 114 |
| 70 x 150 x 15 | 70 | 150 | 15 | 126 | 144 |
| 70 x 160 x 15 | 70 | 160 | 15 | 126 | 144 |
| 72 x 110 x 12 | 72 | 110 | 12 | 87 | 104 |
| 72 x 115 x 12 | 72 | 115 | 12 | 87 | 104 |
| 75 x 110 x 12 | 75 | 110 | 12 | 87 | 104 |
| 75 x 115 x 12 | 75 | 115 | 12 | 87 | 104 |
| 75 x 120 x 15 | 75 | 120 | 15 | 96 | 114 |
| 75 x 125 x 15 | 75 | 125 | 15 | 96 | 114 |
| 75 x 130 x 15 | 75 | 130 | 15 | 96 | 114 |
| 75 x 150 x 15 | 75 | 150 | 15 | 126 | 144 |
| 75 x 160 x 15 | 75 | 160 | 15 | 126 | 144 |
| 76 x 110 x 12 | 76 | 110 | 12 | 87 | 104 |
| 76 x 115 x 12 | 76 | 115 | 12 | 87 | 104 |
| 78 x 110 x 12 | 78 | 110 | 12 | 87 | 104 |
| 78 x 115 x 12 | 78 | 115 | 12 | 87 | 104 |
| 80 x 110 x 12 | 80 | 110 | 12 | 87 | 104 |
| 80 x 115 x 12 | 80 | 115 | 12 | 87 | 104 |
| 80 x 120 x 15 | 80 | 120 | 15 | 96 | 114 |
| 80 x 125 x 15 | 80 | 125 | 15 | 96 | 114 |

Mounting fits see page 12 – Tolerance Table page 22.

www.bergab.ru Берг АБ bergab@ya.ru Тел. (495)-228-06-21, факс (495) 223-3071

www.bergab.ru Берг АБ bergab@ya.ru Тел. (495)-228-06-21, факс (495) 223-3071



Simply specify seal type and dimensions.

Special dimensions on request.

$S_a$ = end play in mounted position (total axial movement of both rings from one end position to the other)

$S_a$ = 0.5 mm (0.02") for all sizes

| Type Ⓢ – Ⓢa – Ⓢi | d mm | D mm | b mm | $e_1$ mm | $e_2$ mm |
|---|---|---|---|---|---|
| 80 x 130 x 15 | 80 | 130 | 15 | 96 | 114 |
| 80 x 140 x 15 | 80 | 140 | 15 | 116 | 134 |
| 80 x 145 x 15 | 80 | 145 | 15 | 116 | 134 |
| 80 x 170 x 15 | 80 | 170 | 15 | 146 | 164 |
| 80 x 180 x 15 | 80 | 180 | 15 | 146 | 164 |
| 82 x 110 x 12 | 82 | 110 | 12 | 87 | 104 |
| 82 x 115 x 12 | 82 | 115 | 12 | 87 | 104 |
| 85 x 120 x 15 | 85 | 120 | 15 | 96 | 114 |
| 85 x 125 x 15 | 85 | 125 | 15 | 96 | 114 |
| 85 x 130 x 15 | 85 | 130 | 15 | 96 | 114 |
| 85 x 150 x 15 | 85 | 150 | 15 | 126 | 144 |
| 85 x 160 x 15 | 85 | 160 | 15 | 126 | 144 |
| 85 x 170 x 15 | 85 | 170 | 15 | 146 | 164 |
| 85 x 180 x 15 | 85 | 180 | 15 | 146 | 164 |
| 90 x 120 x 15 | 90 | 120 | 15 | 96 | 114 |
| 90 x 125 x 15 | 90 | 125 | 15 | 96 | 114 |
| 90 x 130 x 15 | 90 | 130 | 15 | 96 | 114 |
| 90 x 140 x 15 | 90 | 140 | 15 | 116 | 134 |
| 90 x 145 x 15 | 90 | 145 | 15 | 116 | 134 |
| 90 x 150 x 15 | 90 | 150 | 15 | 126 | 144 |
| 90 x 160 x 15 | 90 | 160 | 15 | 126 | 144 |
| 90 x 190 x 15 | 90 | 190 | 15 | 166 | 184 |
| 90 x 200 x 15 | 90 | 200 | 15 | 166 | 184 |
| 95 x 140 x 15 | 95 | 140 | 15 | 116 | 134 |
| 95 x 145 x 15 | 95 | 145 | 15 | 116 | 134 |
| 95 x 170 x 15 | 95 | 170 | 15 | 146 | 164 |
| 95 x 180 x 15 | 95 | 180 | 15 | 146 | 164 |
| 95 x 190 x 15 | 95 | 190 | 15 | 166 | 184 |
| 95 x 200 x 15 | 95 | 200 | 15 | 166 | 184 |
| 100 x 140 x 15 | 100 | 140 | 15 | 116 | 134 |
| 100 x 145 x 15 | 100 | 145 | 15 | 116 | 134 |
| 100 x 150 x 15 | 100 | 150 | 15 | 126 | 144 |
| 100 x 160 x 15 | 100 | 160 | 15 | 126 | 144 |
| 100 x 190 x 15 | 100 | 190 | 15 | 166 | 184 |
| 100 x 200 x 15 | 100 | 200 | 15 | 166 | 184 |
| 105 x 140 x 15 | 105 | 140 | 15 | 116 | 134 |
| 105 x 145 x 15 | 105 | 145 | 15 | 116 | 134 |
| 105 x 150 x 15 | 105 | 150 | 15 | 126 | 144 |
| 105 x 160 x 15 | 105 | 160 | 15 | 126 | 144 |
| 110 x 140 x 15 | 110 | 140 | 15 | 116 | 134 |

| Type Ⓢ – Ⓢa – Ⓢi | d mm | D mm | b mm | $e_1$ mm | $e_2$ mm |
|---|---|---|---|---|---|
| 110 x 145 x 15 | 110 | 145 | 15 | 116 | 134 |
| 110 x 150 x 15 | 110 | 150 | 15 | 126 | 144 |
| 110 x 160 x 15 | 110 | 160 | 15 | 126 | 144 |
| 110 x 170 x 15 | 110 | 170 | 15 | 146 | 164 |
| 110 x 180 x 15 | 110 | 180 | 15 | 146 | 164 |
| 110 x 190 x 15 | 110 | 190 | 15 | 166 | 184 |
| 110 x 200 x 15 | 110 | 200 | 15 | 166 | 184 |
| 115 x 150 x 15 | 115 | 150 | 15 | 126 | 144 |
| 115 x 160 x 15 | 115 | 160 | 15 | 126 | 144 |
| 120 x 150 x 15 | 120 | 150 | 15 | 126 | 144 |
| 120 x 160 x 15 | 120 | 160 | 15 | 126 | 144 |
| 120 x 170 x 15 | 120 | 170 | 15 | 146 | 164 |
| 120 x 180 x 15 | 120 | 180 | 15 | 146 | 164 |
| 125 x 170 x 15 | 125 | 170 | 15 | 146 | 164 |
| 125 x 180 x 15 | 125 | 180 | 15 | 146 | 164 |
| 130 x 170 x 15 | 130 | 170 | 15 | 146 | 164 |
| 130 x 180 x 15 | 130 | 180 | 15 | 146 | 164 |
| 130 x 190 x 15 | 130 | 190 | 15 | 166 | 184 |
| 130 x 200 x 15 | 130 | 200 | 15 | 166 | 184 |
| 135 x 170 x 15 | 135 | 170 | 15 | 146 | 164 |
| 135 x 180 x 15 | 135 | 180 | 15 | 146 | 164 |
| 138 x 170 x 15 | 138 | 170 | 15 | 146 | 164 |
| 138 x 180 x 15 | 138 | 180 | 15 | 146 | 164 |
| 140 x 170 x 15 | 140 | 170 | 15 | 146 | 164 |
| 140 x 180 x 15 | 140 | 180 | 15 | 146 | 164 |
| 140 x 190 x 15 | 140 | 190 | 15 | 166 | 184 |
| 140 x 200 x 15 | 140 | 200 | 15 | 166 | 184 |
| 148 x 190 x 15 | 148 | 190 | 15 | 166 | 184 |
| 148 x 200 x 15 | 148 | 200 | 15 | 166 | 184 |
| 150 x 190 x 15 | 150 | 190 | 15 | 166 | 184 |
| 150 x 200 x 15 | 150 | 200 | 15 | 166 | 184 |
| 155 x 190 x 15 | 155 | 190 | 15 | 166 | 184 |
| 155 x 200 x 15 | 155 | 200 | 15 | 166 | 184 |
| 160 x 190 x 15 | 160 | 190 | 15 | 166 | 184 |
| 160 x 200 x 15 | 160 | 200 | 15 | 166 | 184 |

Design and dimensions are subject to changes

Dimensions

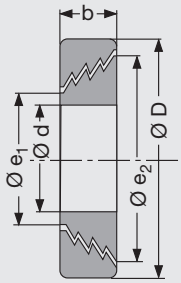


Mounting Dimensions

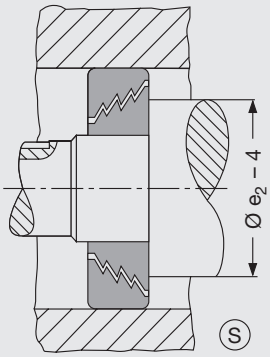


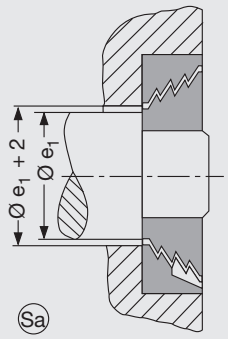


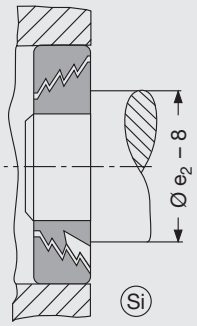


Mounting fits see page 12 – Tolerance Table page 22.

www.bergab.ru Берг АБ bergab@ya.ru Тел. (495)-228-06-21, факс (495) 223-3071

www.bergab.ru Берг АБ bergab@ya.ru Тел. (495)-228-06-21, факс (495) 223-3071



## Double sealing of a spindle

The application shown in figure 15 requires two sealing functions against two different heavy splashing liquids. The solution is to use two GMN Labyrinth Seals “M” Type.

One seal is used to prevent penetration of the cutting oil from the outside.

Liquid splashed into the first gap is centrifuged by the peripheral grooves of the “M” Type seal into a circular groove of at least 5 mm depth.

The cutting oil can flow back to the outside via a drain hole. Using the same system oil lubricant will be led back to the reservoir by the second seal.

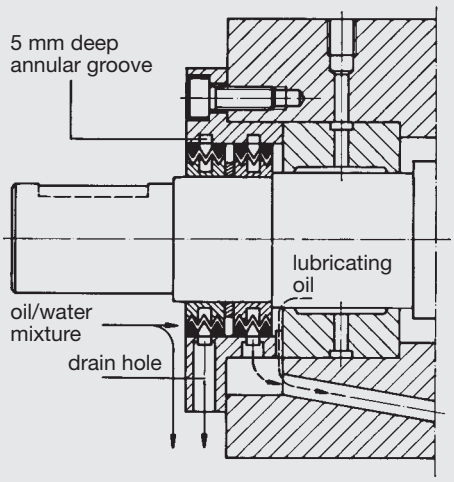


*Figure 14*

## Sealing the axle of a special vehicle

The combined seal shown in figure 16 is just a proposal, not an economic product. If there is more space a stock item lip seal and a non-contact seal can be used.

The GMN Labyrinth Seal “L” Type protects the lip seal against coarse and fine granular contamination as well as against heavy splashing water.

If some water penetrates the seal when the axle is immersed into water for a short time the grease lubricated bearings are protected by the lip seal.

This combination of contact and non-contact seals increases the life of the entire unit.

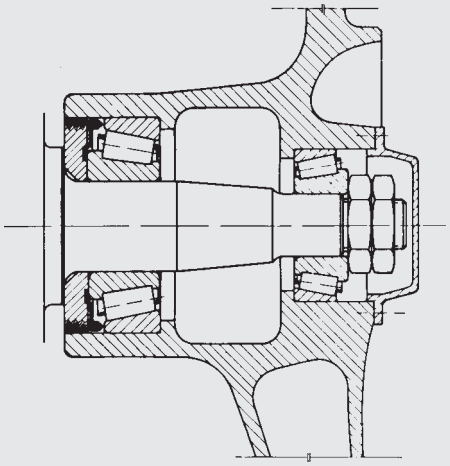

*Figure 15*

## Sealing an electric motor

Two GMN Labyrinth Seals, “L” Type, of special design prevent entry of dust and loss of grease.

The spacing ring usually placed between the ball bearing and the fan wheel is integrated in the seal inner ring.

Thus an economical solution for high volume production quantities is achieved.

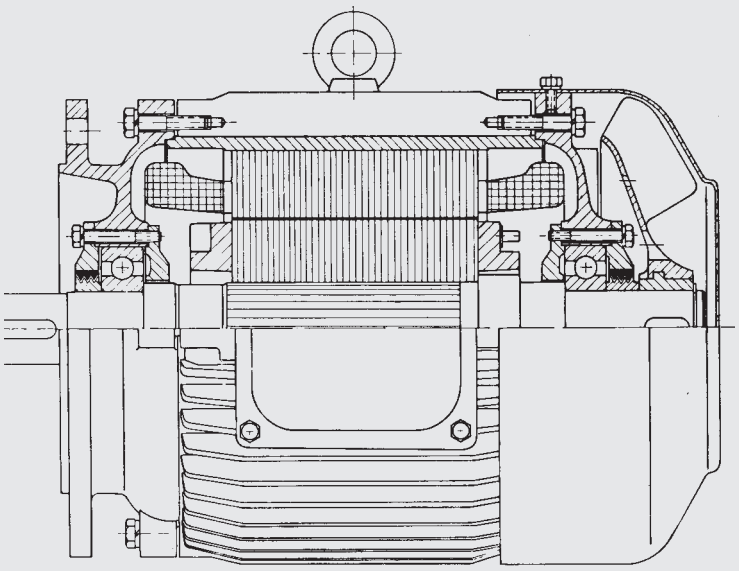

*Figure 16*

www.bergab.ru Берг АБ bergab@ya.ru Тел. (495)-228-06-21, факс (495) 223-3071

www.bergab.ru Берг АБ bergab@ya.ru Тел. (495)-228-06-21, факс (495) 223-3071



## Sealing a high frequency grinding spindle

The GMN Labyrinth Seal “L” Type has to protect the high precision bearings against grinding chips and lightly splashing liquids.

The excess pressure caused by the oil mist lubrication increases the sealing efficiency. To protect the seal against splashing liquids when the spindle is stationary an additional front plate should be used.

*Figure 17*

## Sealing a drilling sleeve

The grease lubricated bearings have to be protected against cutting oil and chips. Due to the vertical mounting position the flange must be designed correctly because it is not possible to protect the inside against vertical splashing liquids by an uncovered non-contact seal.

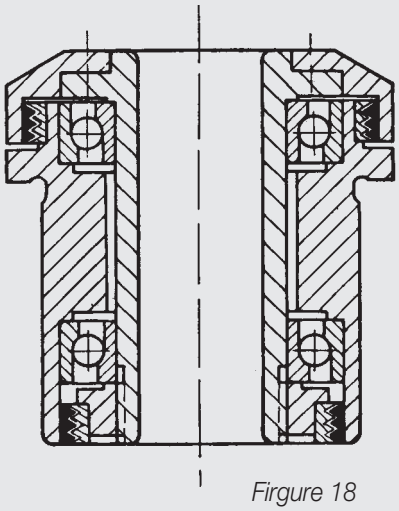

*Firgure 18*

## Sealing a conveyer roller

The grease lubricated ball bearing of the roller has to be protected against dust and coarse granular contamination from the outside.

**Mounting**
For mounting a bushing is used to push the seal onto the shaft and into the housing in one operation. To reach wobblefree running make sure that the inner ring is square against the shoulder of the shaft.

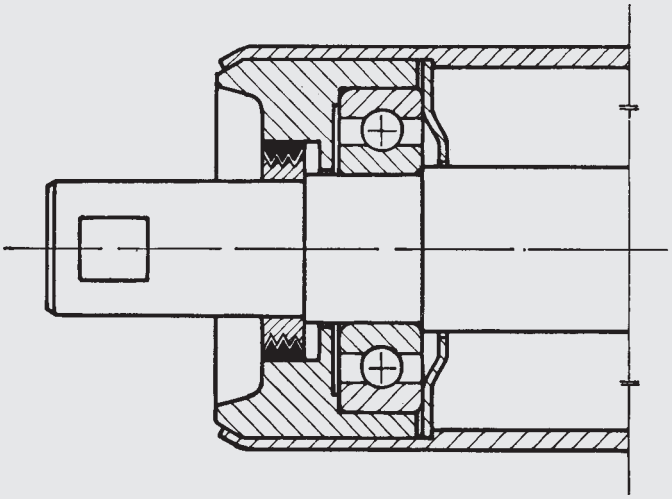

*Figure 19*

www.bergab.ru Берг АБ bergab@ya.ru Тел. (495)-228-06-21, факс (495) 223-3071

www.bergab.ru Берг АБ bergab@ya.ru Тел. (495)-228-06-21, факс (495) 223-3071



## Sealing a gearbox with oil-level up to the middle of the shaft

With this application it is absolutely necessary to use a contact seal to keep the lubricant inside the gearbox. It is impossible to use a non-contact seal if the level of the lubricant is higher than the sealing diameter.
A GMN Gap Seal is used to protect the lip seal against rough contamination and to increase the life of the whole sealing system.

**Mounting:**
There is no axial limitation for the mounting depth of the GMN Gap Seal. Therefore it is necessary to true the face of the seal to the face of the housing. The face of the housing has to be square to the housing bore.

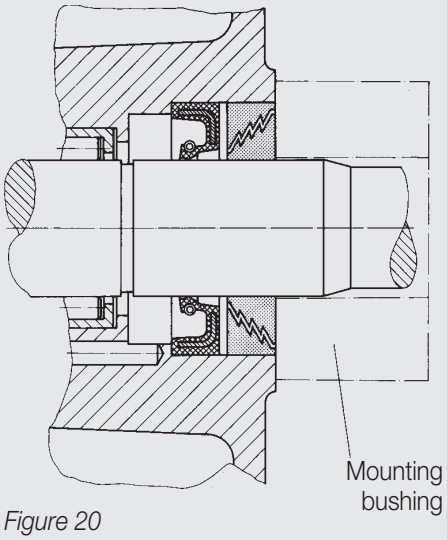


*Figure 20*

## Sealing a spindle bearing (machine tool)

This figure shows an application, where two GMN Gap Seals are used with opposite sealing directions. One is protecting the bearing against penetration of coolant and dust. The other one is used to keep the grease inside the spindle. To obtain the best sealing function a spacing ring on the shaft with at least 2 mm width should be used.

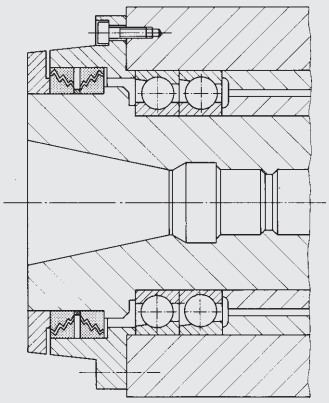

*Figure 21*

## Sealing a grease lubricated antifriction bearing

To keep the grease inside the unit and to prevent penetration of dust, coarse granular contamination and light splashing liquids, two GMN Gap Seals in opposite sealing directions can be used. One facing the lubricant, the other facing the contaminant. To get the best sealing function a spacing ring is placed between the two inner rings.

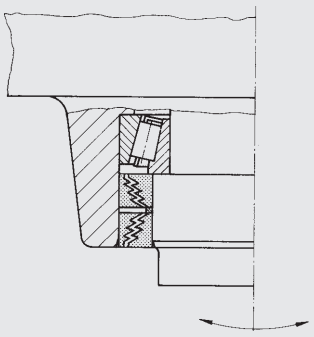

*Figure 22*

## Sealing a conveyer roller

Conveyer rollers have to fulfill the same requirements as transport cylinders.
Figure 24 shows a specially designed GMN Gap Seal Ⓢ Type protecting grease lubricated antifriction bearings against splashing fluids, dirt or dust.

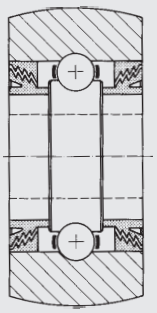

*Figure 23*

www.bergab.ru Берг АБ bergab@ya.ru Тел. (495)-228-06-21, факс (495) 223-3071

## Sealing a spindle bearing (machine tool)

Against heavy splashing coolant the spindle bearing of a machine tool is protected by a GMN Gap Seal (Sa) Type with drain. To protect the seal against splashing coolant while the spindle is stationary a cover plate can be placed in front of the seal.
Please allow for a drain hole in the housing.

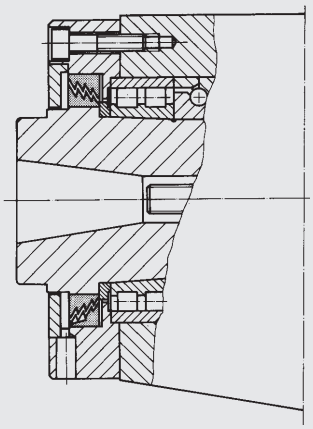

*Figure 24*

## Sealing an automotive wheel bearing

For this application we recommend a GMN Gap Seal (S) Type filled with grease as additional sealing to prevent the penetration by splashing liquids, dirt and dust. Ease of mounting for car repair purposes is achieved by this design.

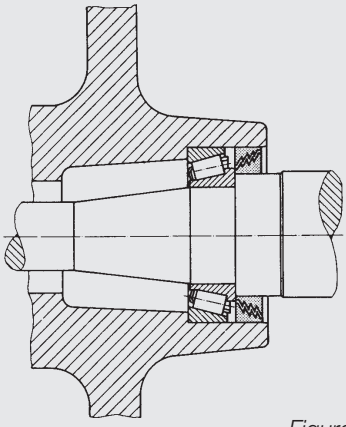

*Figure 25*

## Sealing a work spindle

(two different working positions)

A work spindle should be used for two applications with minimum change of parts. Only the cover plate and the seal housing are to change.

Figure 27a shows an application with the sealing location on the bottom. The cover plate is designed with drain holes for centrifuging out penetrating liquids.

Figure 27b shows the design of the cover plate without drain holes if heavy splashing liquids are applied to a seal on top of the assembly.

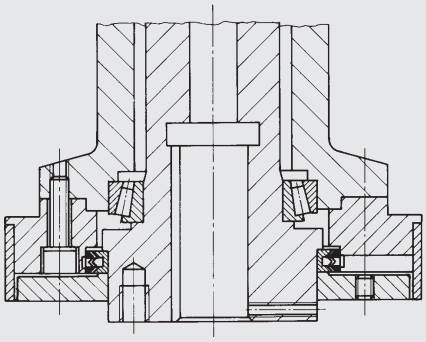

*Figure 26a*

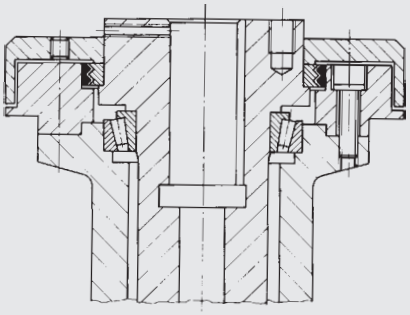

*Figure 26b*

www.bergab.ru Берг АБ bergab@ya.ru Тел. (495)-228-06-21, факс (495) 223-3071



## Housing

| Housing | | Extract of DIN ISO 286-2 | | | | | | |
|---|---|---|---|---|---|---|---|---|
| Normal size in mm | above | Housing tolerance in 0.0001 inches (0.001 mm) | | | | | | |
| | to | 10<br>18 | 18<br>30 | 30<br>50 | 50<br>80 | 80<br>120 | 120<br>180 | 180<br>250 |
| K7 | | + 2 ( 6)<br>– 5 (12) | + 2 ( 6)<br>– 6 (15) | + 3 ( 7)<br>– 7 (18) | + 4 ( 9)<br>– 8 (21) | + 4 (10)<br>– 10 (25) | + 5 (12)<br>– 11 (28) | + 5 (13)<br>– 13 (33) |
| M7 | | 0<br>– 7 (18) | 0<br>– 8 (21) | 0<br>– 10 (25) | 0<br>– 12 (30) | 0<br>– 14 (35) | 0<br>– 16 (40) | 0<br>– 18 (46) |
| N7 | | – 2 ( 5)<br>– 9 (23) | – 3 ( 7)<br>– 11 (28) | – 3 ( 8)<br>– 11 (33) | – 3 ( 9)<br>– 13 (39) | – 4 (10)<br>– 15 (45) | – 5 (12)<br>– 20 (52) | – 6 (14)<br>– 24 (60) |
| H7 | additional glueing of the aluminium outer ring necessary | + 7 (18)<br>0 | + 8 (21)<br>0 | + 10 (25)<br>0 | + 12 (30)<br>0 | + 14 (35)<br>0 | + 16 (40)<br>0 | + 18 (46)<br>0 |
| G7 | additional glueing of the aluminium outer ring necessary | + 9 (24)<br>+ 2 ( 6) | + 11 (28)<br>+ 3 ( 7) | + 13 (34)<br>+ 4 ( 9) | + 16 (40)<br>+ 4 (10) | + 18 (47)<br>+ 5 (12) | + 21 (54)<br>+ 6 (14) | + 24 (61)<br>+ 6 (15) |

## Shaft

| Shaft | | Extract of DIN ISO 286-2 | | | | | | |
|---|---|---|---|---|---|---|---|---|
| Normal size in mm | above | Shaft tolerance in 0.0001 inches (0.001 mm) | | | | | | |
| | to | 10<br>18 | 18<br>30 | 30<br>50 | 50<br>80 | 80<br>120 | 120<br>180 | 180<br>250 |
| h6 | | 0<br>– 4 (11) | 0<br>– 5 (13) | 0<br>– 6 ( 16) | 0<br>– 7 ( 19) | 0<br>– 9 (22) | 0<br>– 10 (25) | 0<br>– 11 (29) |
| h7 | | 0<br>– 7 (18) | 0<br>– 8 (21) | 0<br>– 9 (25) | 0<br>– 11 (30) | 0<br>– 13 (35) | 0<br>– 15 (40) | 0<br>– 18 (46) |
| k6 | | + 5 (12)<br>+ 0 ( 1) | + 6 (15)<br>+ 1 ( 2) | + 7 ( 18)<br>+ 1 ( 2) | + 8 ( 21)<br>+ 1 ( 2) | + 10 (25)<br>+ 1 ( 3) | + 11 (28)<br>+ 1 ( 3) | + 13 (33)<br>+ 2 ( 4) |
| g6 | additional glueing of the steel inner ring necessary | – 2 ( 6)<br>– 7 (17) | – 3 ( 7)<br>– 8 (20) | – 4 ( 9)<br>– 10 ( 25) | – 4 ( 10)<br>– 11 ( 29) | – 5 (12)<br>– 13 (34) | – 6 (14)<br>– 15 (39) | – 5 (15)<br>– 17 (44) |
| f7 | additional glueing of the steel inner ring necessary | – 6 (16)<br>– 13 (34) | – 8 (20)<br>– 16 (41) | – 10 ( 25)<br>– 20 ( 50) | – 12 ( 30)<br>– 24 ( 60) | – 14 (36)<br>– 28 (71) | – 17 (43)<br>– 33 (83) | – 20 (50)<br>– 38 (96) |

www.bergab.ru Берг АБ bergab@ya.ru Тел. (495)-228-06-21, факс (495) 223-3071

# More information about our extensive delivery program could be found in the Internet:

# www.gmn.de

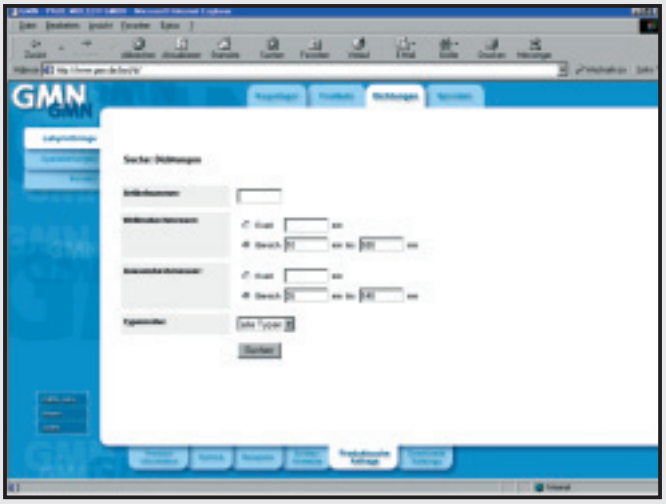

- Data sheets
- dxf – Files
- Inquiry by e-mail

- Download area
- Local representatives
- Product search

## On request we produce customer oriented specials in many variations based on the users requirements. Please contact our technical staff:

Paul Müller Industrie GmbH & Co. KG
Äußere Bayreuther Str. 230
90411 Nürnberg

E-mail: vertrieb.at@gmn.de
Telefax: +49 (0) 911/5691-569
Phone: +49 (0) 911/5691-0

Driving Technologie

Contact:
Product manager: Herr Karl -417

R & D: Herr Elbacher -414
Herr Studtrucker -243

**Sales:**
Wälzlager-Vertriebs GmbH Nürnberg
Generalvertretung
Emmericher Straße 31
90411 Nürnberg

Phone: + 49(0) 911/59 776-0
Telefax: + 49(0) 911/59 84 313
E-mail: info@waelag.de
Internet: www.waelag.de

www.bergab.ru Берг АБ bergab@ya.ru Тел. (495)-228-06-21, факс (495) 223-3071

GMN

GMN

GMN Paul Müller Industrie GmbH & Co. KG

**Driving Technology – Antriebstechnik**

Äußere Bayreuther Straße 230
D-90411 Nürnberg
Phone: (09 11) 56 91-417
Telefax: (09 11) 56 91-569
e-mail: vertrieb.at@gmn.de
Internet: http://www.gmn.de

The contents of this catalog have been checked very carefully. It may not result in any warranty, if we missed any mistake.
Changes based on technical progress reserved.
Printed in Germany 8351 05/04 E

www.bergab.ru Берг АБ bergab@ya.ru Тел. (495)-228-06-21, факс (495) 223-3071