www.bergab.ru Берг АБ skf@bergab.ru Тел. (495)-228-06-21, факс (495) 223-30-71

ROLLON®

LinearEvolution

CURVILINE

www.rollon.com

www.bergab.ru Берг АБ skf@bergab.ru Тел. (495)-228-06-21, факс (495) 223-30-71

About Rollon

Development of global business

1975 Parent company, Rollon S.r.l., founded in Italy

1991 Founding of Rollon GmbH in Germany

1995 Expansion of headquarters to new 4,000 m² factory
Assembly starts in Germany
Quality management certified to ISO 9001

1998 Rollon B.V. in the Netherlands and Rollon Corporation in the USA are founded
Expansion of German branch to new 1,000 m² plant

1999 Founding of Rollon S.A.R.L. in France
Environmental management certified to ISO 14001

2000 Rollon s.r.o. founded in Czech Republic

2001 Expansion of headquarters to new 12,000 m² manufacturing plant

2007 Restructuring of the GmbH and alignment of production in Germany to customer-specific adaptations
Takeover of the assets of a manufacturer of linear rail systems

2008 Expansion of sales network in Eastern Europe and Asia

Continual expansion and optimization of the portfolio

Founded in 1975, Rollon manufactured high-precision linear roller bearings for the machine tool industry. Early on, Rollon started manufacturing linear bearings based on the bearing-cage design. In 1979, the Compact Rail self-aligning linear bearings joined the Telescopic Rail industrial drawer slides and Easy Rail linear bearings and became the basis of the strong foundation on which the company is building upon today. Continuing optimization of these core products still remains one of the most important goals at Rollon. The development of the patented Compact Rail linear bearing, which uses different proprietary rail profiles and high-precision radial ball bearing sliders, enables the compensation of height and angle mounting defects in applications, and is only one example of the continuing efforts to innovative the development of our existing product families. In the same manner, we continually introduce innovative new product familiesdisplaying our continuing product development and optimization in the industry. These include:

- 1994 Light Rail - full and partial extension telescopic in lightweight design
- 1996 Uniline - belt driven linear actuators
- 2001 Ecoline - economical aluminum linear actuators
- 2002 X-Rail - inexpensive formed steel linear guides
- 2004 Curviline - curved monorail profile rail guide with roller carriages
- 2007 Monorail - miniature sizes and full sized

Each further innovation of our linear bearings is built upon the our extensive knowledge of the nine product families in production today as well as on the current market demands. Rollon is the ultimate linear technology for any application needs.

www.bergab.ru Берг АБ skf@bergab.ru Тел. (495)-228-06-21, факс (495) 223-30-71

Content

1 Product explanation
Curvilinear rails for constant and variable radii 4

2 Technical data
Performance characteristics and notes 6
Load capacities 7

3 Product dimensions
Constant / variable radii rails 8
Sliders, Mounted system rails / sliders 9

4 Technical instructions
Corrosion protection, Lubrication 10
Setting the preload

Ordering key
Ordering key with explanations

Portfolio

www.bergab.ru Берг АБ skf@bergab.ru Тел. (495)-228-06-21, факс (495) 223-30-71

Product explanation

Curviline are curvilinear rails for constant and variable radii

Fig. 1

Curviline is the name of the curvilinear rail product family. They are used for all non-linear special movements. Rails with constant or variable radii may be specified according to customer requirements, resulting in a highly flexible, economical solution. Curviline is available in two rail widths.
The use of standard radii is recommended. All non-standard rail layouts and radii are possible as custom products, however extra lead time may result.

The most important characteristics:

- Straight and curved partial pieces in one rail are possible
- Sliders with four rollers arranged in pairs maintain the preload over the entire rail length
- Custom production according to customer requirements

Preferred areas of application of the Curviline product family:

- Packaging machines
- Railway car interior doors
- Special extensions
- Shipbuilding (interior doors)
- Food industry

www.bergab.ru Берг АБ skf@bergab.ru Тел. (495)-228-06-21, факс (495) 223-30-71

Constant radii

The layout of CKR guide rails corresponds to a partial section of a complete circle.

Fig. 2

Variable radii

CVR curvilinear rail is a variable combination of various radii and straight partial pieces.

Fig. 3

Slider

The carriage maintains the desired preload over the entire rail layout. Moving roller mountings and the paired application of concentric and eccentric roller pins ensures uniform running even with a complex rail layout.

Fig. 4

www.bergab.ru Берг АБ skf@bergab.ru Тел. (495)-228-06-21, факс (495) 223-30-71

Technical data

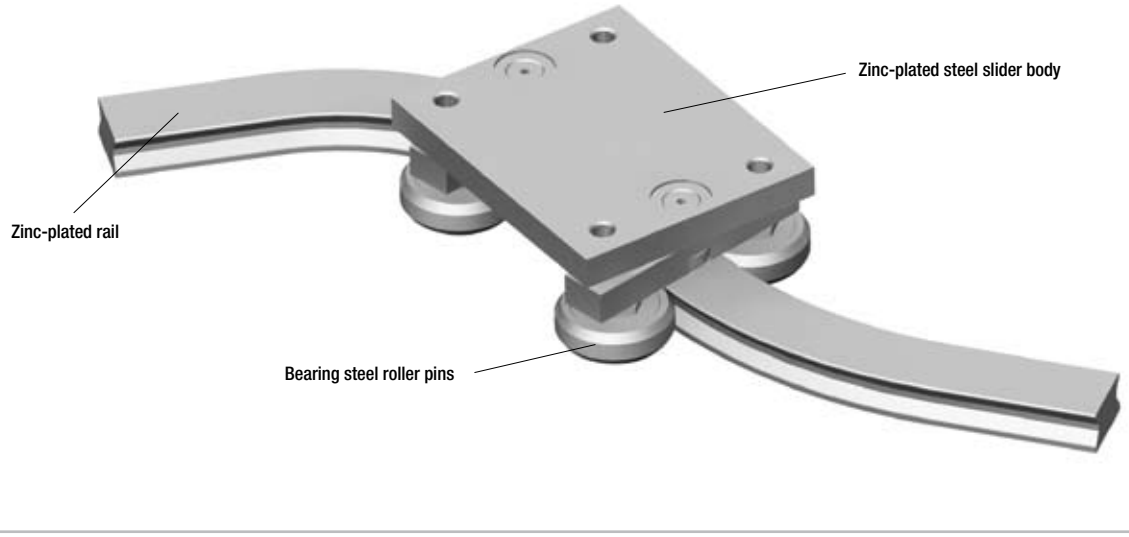

Fig. 5

Performance characteristics:

- Available rail widths: CKR01/CVR01: 16.5 mm (0.65 in) and CKR05/CVR05: 23 mm (0.91 in)
- Max. slider operating speed on the rail: 1.5 m/s (59 in/s) (depending on application)
- Max. acceleration: 2 m/s² (78 in/s²) (depending on application)
- Max. effective length of the rail: 3,240 mm (127.56 in)
- Max. traverse: CCT08: 3,170 mm (124.8 in) and CCT11: 3,140 mm (123.62 in)
- Minimum radius for both sizes: 120 mm (4.72 in). For non-standard radii, please contact Application Technology
- Radius tolerance +/- 0.5 mm (0.02 in), angle tolerance +/- 1°
- Temperature range: -30 °C to +80 °C (-22 °F to +176 °F)
- Rail and runner electrolytic zinc-plated and passivated (Rollon Aloy); increased anticorrosive protection on request (see pg. 10 Anticorrosive protection)
- Rail material: CF 45
- Slider body material: Fe360
- Roller material: 100Cr6
- Roller pins lubricated for life

Remarks:

- By a simple adjustment of the eccentric roller pins (markings on bottom of roller), the slider has no clearance or is set with preload on the rails
- The recommended hole pitch is 80 mm (3.15 in) on the extended length
- Please indicate the precise rail shape and the desired hole pattern in a drawing
- Indicate if the design is a right or left version when ordering
- Composite rails are not recommended. For more information please contact Application Technology
- Resulting moment loads must be absorbed through the use of two sliders. For more information please contact Application Technology

www.bergab.ru Берг АБ skf@bergab.ru Тел. (495)-228-06-21, факс (495) 223-30-71

Load capacities

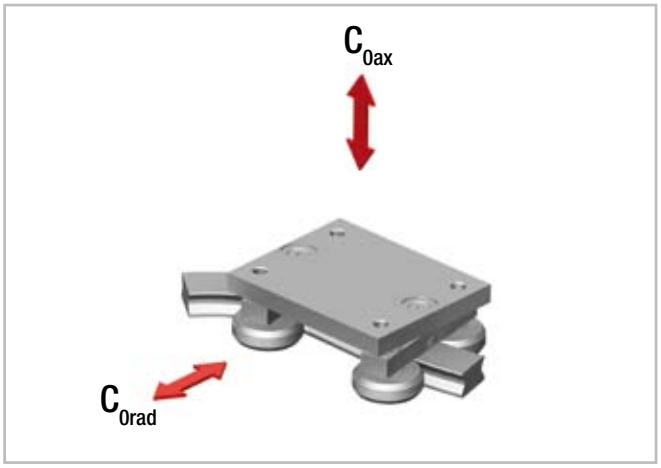

Fig. 6

Slider type	C_{0ax} [N]	C_{0rad} [N]
CCT08	400	570
CCT11	1130	1615

Resulting moment loads must be absorbed through the use of two sliders

Tab. 1

www.bergab.ru Берг АБ skf@bergab.ru Тел. (495)-228-06-21, факс (495) 223-30-71

Product dimensions

Constant / variable radii rails

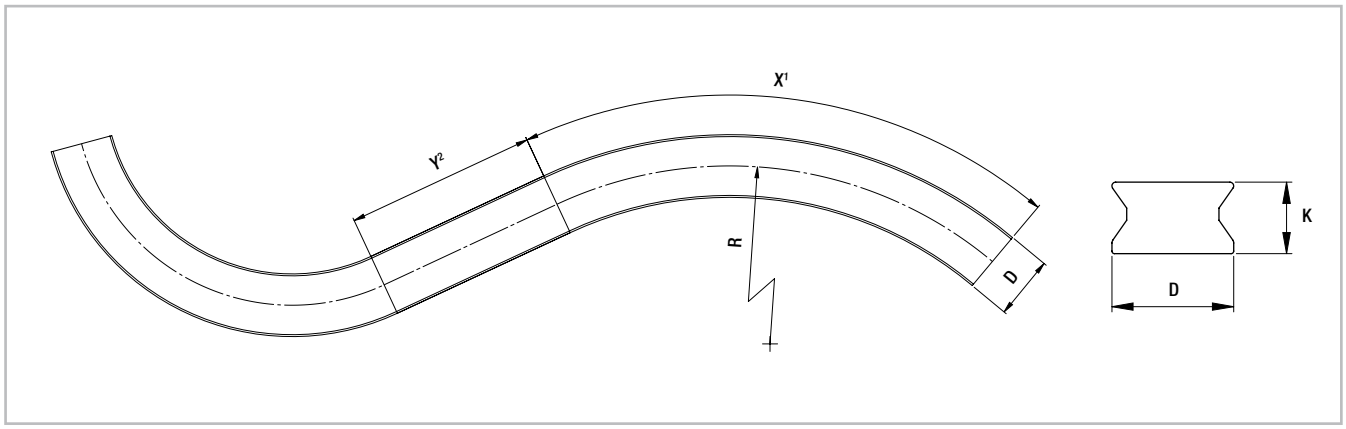

[1] The max. angle (X) is dependent on the radius
[2] For curvilinear rails with variable radii, Y must be at least 70 mm

Fig. 7

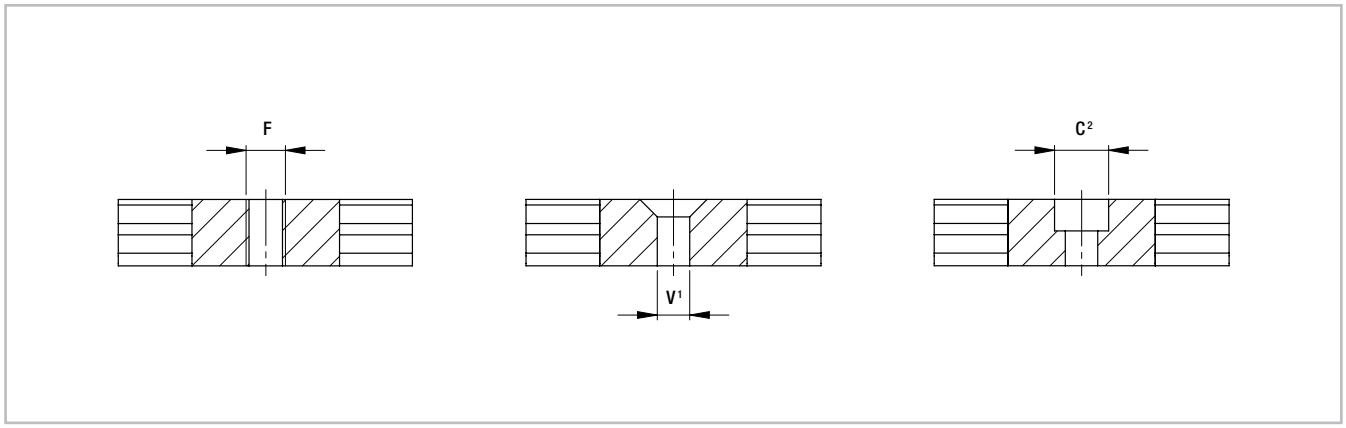

[1] Fixing holes (V) for countersunk head screws according to DIN 7991
[2] Fixing holes (C) for socket cap screws according to DIN 912

Fig. 8

Type	D [mm]	K [mm]	F	C	V	X	Standard radii [mm]	Y [mm]	Weight [kg/m]
CKR01 CVR01	16.5	10	up to M6	up to M5	up to M5	dependent on radius	150 - 200 - 250 - 300 - 400 - 500 - 600 - 700 - 800 - 900 - 1000	min. 70	1.2
CKR05 CVR05	23	13.5	up to M8	up to M6	up to M6				2.2

Tab. 2

Please indicate the precise rail layout and the desired hole pattern in a drawing. We recommend 80 mm (3.15 in) on the extended length as a gage for the hole pattern.

Non-standard radii are possible as special products. For more information on rail layouts, radii and hole patterns, please contact Application Technology.

www.bergab.ru Берг АБ skf@bergab.ru Тел. (495)-228-06-21, факс (495) 223-30-71

Slider

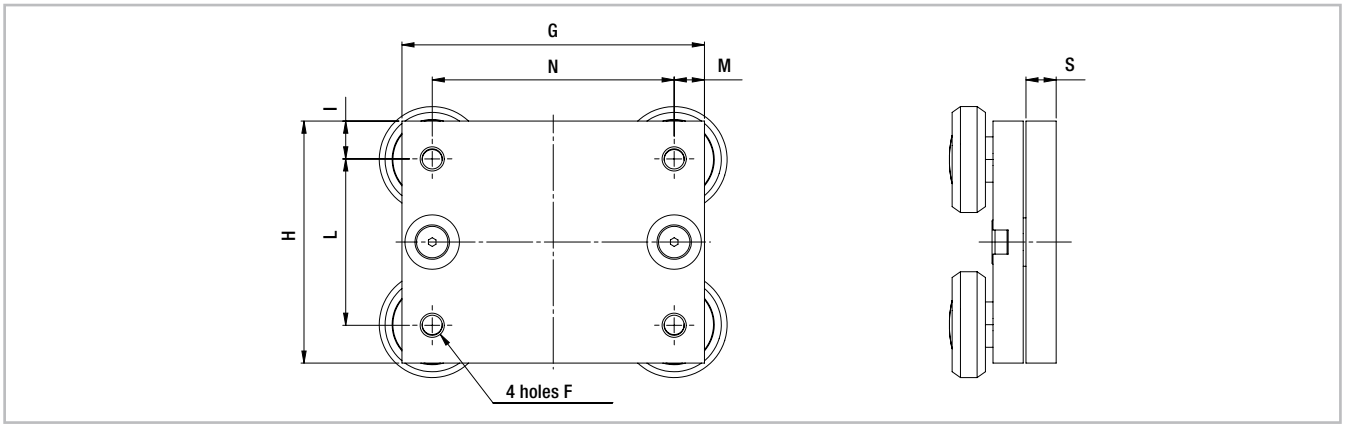

Fig. 9

Type	G [mm]	H [mm]	I [mm]	L [mm]	M [mm]	N [mm]	S [mm]	F	Weight [kg]
CCT08	70	50	10	30	10	50	10	M5	0.45
CCT11	100	80	12.5	55	10	80	10	M8	1.1

Tab. 3

Mounted sliders and rails

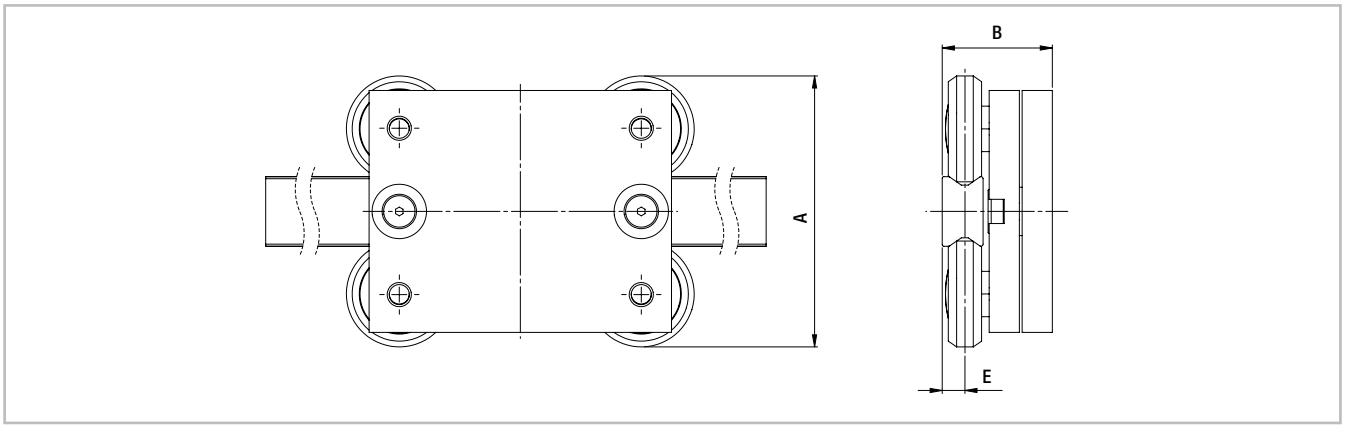

Fig. 10

Configuration	A [mm]	B [mm]	E [mm]
CKR01-CCT08 CVR01-CCT08	60	32.3	5.7
CKR05-CCT11 CVR05-CCT11	89.5	36.4	7.5

Tab. 4

www.bergab.ru Берг АБ skf@bergab.ru Тел. (495)-228-06-21, факс (495) 223-30-71

Technical instructions

Anticorrosive protection

The Curviline product family has a standard anticorrosive protection by electrolytic zinc-plating with passivation (Rollon Aloy). If increased anticorrosive protection is required, application-specific surface treatments are available on request, e.g. as nickel-plated design with FDA approval for use in the food industry. For more information please contact Application Technology.

Lubrication

Roller pin lubrication

All roller pins of the Curviline product family are lubricated for life.

Lubrication of the raceways

Recommended lubrication intervals are heavily dependent upon the ambient conditions, speed and temperature. Under normal conditions, lubrication is recommended after 100 km operational performance or after an operating period of six months. In critical application cases the interval should be shorter. Please clean the raceways carefully before lubrication. We recommend a roller bearing lubricant with a lithium base of average consistency as a lubricant.

Different lubricants for special applications are available upon request. Example: Lubricant with FDA approval for use in the food industry.
For more information please contact Application Technology.

Proper lubrication during normal conditions:

- reduces friction
- reduces wear
- reduces the load of the contact surfaces through elastic deformations
- reduces running noise
- increases quiet running

www.bergab.ru Берг АБ skf@bergab.ru Тел. (495)-228-06-21, факс (495) 223-30-71

Setting the preload

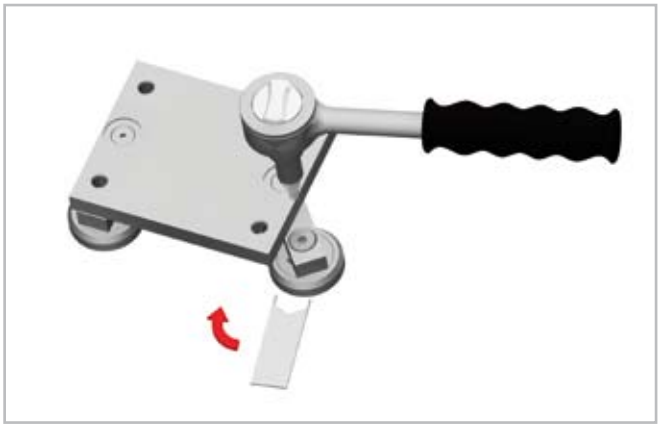

Fig. 11

Type	Tightening torque [Nm]
CCT08	7
CCT11	12

Tab. 5

If the curvilinear rails are delivered as a system, the sliders are already set with no clearance. In this case the fixing screws are secured with Loctite® at the factory.

If delivered separately, or if the sliders should be installed in another track, the eccentric roller pins must be readjusted. Important: The fixing screws must be additionally glued against loosening. The following points must also be observed:

- Wipe the raceways of any eventual dirt and debris.
- Slightly loosen the fixing screws of the roller mounting. The eccentric roller pins are marked on the bottom.
- Position the slider(s) at the ends of the rail.
- The special flat key provided is inserted from the side onto the hexagonal of the pin to be set (see fig. 11).
- By turning the flat key clockwise the roller is pressed against the raceway and thus reduces the clearance. Observe that with increasing preload, the friction is also increased and thus the service life reduced.
- Hold the roller pin with the adjustment key in the desired position and carefully tighten the fixing screw. The exact tightening torque will be checked later.
- Move the slider on the rail and check the preload over the entire length of the rail. It should move easily and the slider should not have play at any location of the rail.
- Now tighten the fixing screws with the specified tightening torque (see tab. 5), while the flat key holds the angle adjustment of the pin. A special thread in the roller pin secures the set position.

www.bergab.ru Берг АБ skf@bergab.ru Тел. (495)-228-06-21, факс (495) 223-30-71

Ordering key

Constant radius rail / slider system

CKR01	**85°**	**600**	**890**	**/2/**	**CCT08**	**NIC**	**R**	
							Right or left version	
						Expanded surface protection if deviation from Standard *see pg. 10 Anticorrosion protection*		
					Slider type *see pg. 9, tab. 3*			
				Number of sliders				
			Rails extended length					
		Radius *see pg. 8, tab. 2*						
	Angle							
Rail type *see pg. 8, tab. 2*								

Ordering example: CKR01-085°-0600-0890/2/CCT08-NIC-R

Note: Information for right and left side installation and for expanded surface protection is only necessary if required

Notes on ordering: Rail lengths and radii always are indicated with four digits, angles always with three digits and a zero as prefix

Exact specifications (angle, radius, hole pattern, etc.) must be represented in a drawing

Variable radius rail / slider system

CVR01	**39°**	**200**	**//23°**	**400**	**297**	**/2/**	**CCT08**	**NIC**	**R**
									Right or left version
								Expanded surface protection if deviation from Standard *see pg. 10 Anticorrosion protection*	
							Slider type *see pg. 9, tab. 3*		
						Number of sliders			
					Rails extended length				
				Radius *see pg. 8, tab. 2*					
			Angle						
		Radius *see pg. 8, tab. 2*							
	Angle								
Rail type *see pg. 8, tab. 2*									

Ordering example: CVR01-039°-0200//023°-0400-0297/2/CCT08-NIC-R

Note: Data for angles and respective radii are in sequential order

Note: Information for right and left side installation and for expanded surface protection is only necessary if required

Notes on ordering: Rail lengths and radii always are indicated with four digits, angles always with three digits and a zero as prefix

Exact specifications (layout, angle, radius, hole pattern, etc.) must be represented in a drawing

www.bergab.ru Берг АБ skf@bergab.ru Тел. (495)-228-06-21, факс (495) 223-30-71

Constant radius rails

CKR01	**120°**	**600**	**1152**	**NIC**	**R**
					Right or left version
				Expanded surface protection if deviation from Standard	
				see pg. 10 Anticorrosion protection	
			Rails extended length		
		Radius	*see pg. 8, tab. 2*		
	Angle				
Rail type	*see pg. 8, tab. 2*				

Ordering example: CKR01-120°-0600-1152-NIC-R

Note: Information for right and left side installation and for expanded surface protection is only necessary if required

Notes on ordering: Rail lengths and radii always are indicated with four digits, angles always with three digits and a zero as prefix

Exact specifications (angle, radius, hole pattern, etc.) must be represented in a drawing

Variable radius rails

CVR01	**39°**	**200**	**//23°**	**400**	**297**	**NIC**	**R**
							Right or left version
						Expanded surface protection if deviation from Standard	
						see pg. 10 Anticorrosion protection	
					Rails extended length		
				Radius	*see pg. 8, tab. 2*		
			Winkel				
		Radius	see *pg. 8, tab. 2*				
	Angle						
Schienentyp	see *pg. 8, tab. 2*						

Ordering example: CVR01-039°-0200//023°-0400-0297-NIC-R

Note: Data for various angles and respective radii are in sequential order

Note: Information for right and left side installation and for expanded surface protection is only necessary if required

Notes on ordering: Rail lengths and radii always are indicated with four digits, angles always with three digits and a zero as prefix

Exact specifications (layout, angle, radius, hole pattern, etc.) must be represented in a drawing

Slider

CCT08	**NIC**	
	Expanded surface protection if deviation from Standard	*see pg. 10 Anticorrosion protection*
Slider type	*see pg. 9, tab. 3*	

Ordering example: CCT08-NIC

Note: Information for expanded surface protection are only necessary when needed

www.bergab.ru Берг АБ skf@bergab.ru Тел. (495)-228-06-21, факс (495) 223-30-71

Portfolio

COMPACT RAIL
Rugged roller sliders with innovative self adjustment

MINIATURE MONO RAIL
Miniature format profile guideways with unique ball design

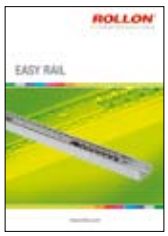

EASY RAIL
Compact, versatile linear bearings

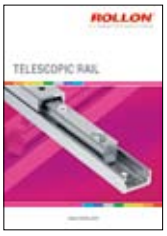

TELESCOPIC RAIL
Smooth-running telescopic linear bearing drawer slides with low deflection under heavy loads

UNILINE
Steel-reinforced, belt-driven linear actuators with hardened steel linear bearings and precision radial ball bearing rollers

X-RAIL
Roller embossed stainless steel profiles for the use in rough environments

MONO RAIL
Profile guideways for highest degrees of precision

LIGHT RAIL
Full and partial extension, lightweight drawer slides

www.bergab.ru Берг АБ skf@bergab.ru Тел. (495)-228-06-21, факс (495) 223-30-71

Fold out ordering key

To make this product catalog as simple as possible for you to use, we have included the following easy-to-read chart.

Your advantages:

- Description and ordering designations easy to read at one glance
- Simplified selection of the correct product
- Links to detailed descriptions in the catalog

www.bergab.ru Берг АБ skf@bergab.ru Тел. (495)-228-06-21, факс (495) 223-30-71

ROLLON®
LinearEvolution

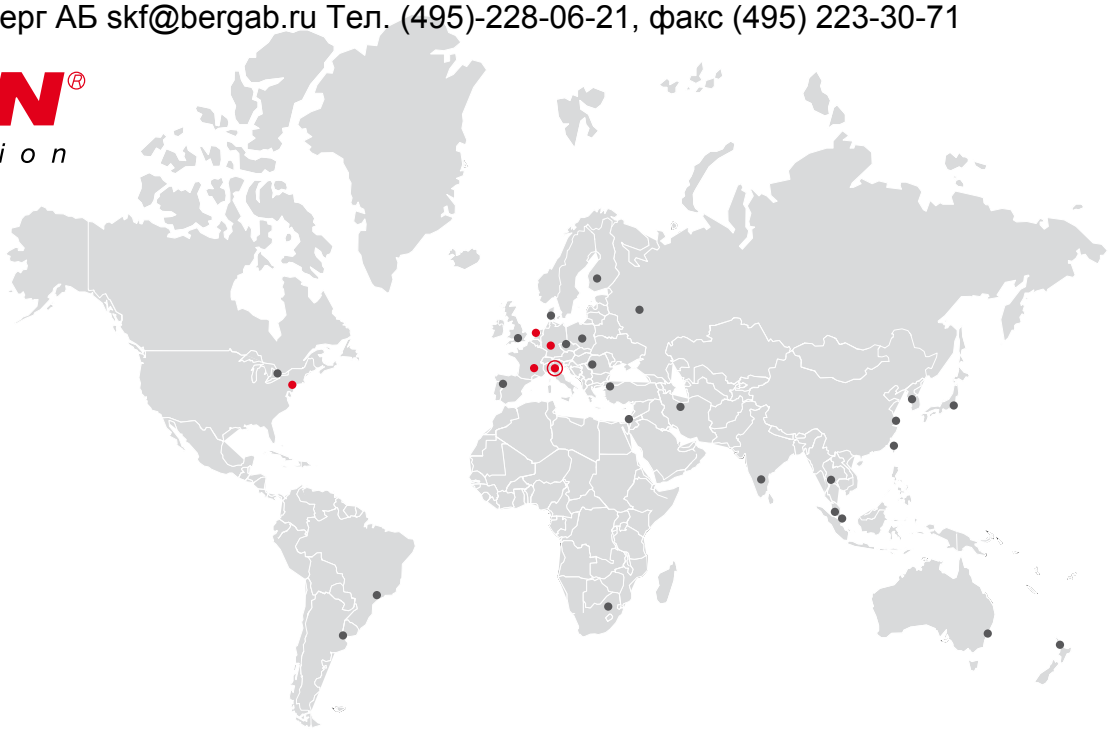

Italy

ROLLON S.r.l.
Via Trieste 26
I-20871 Vimercate (MB)
Tel.: (+39) 039 62 59 1
Fax: (+39) 039 62 59 205
E-Mail: infocom@rollon.it
www.rollon.it

Germany

ROLLON GmbH
Voisweg 5c
D-40878 Ratingen
Tel.: (+49) 21 02 87 45 0
Fax: (+49) 21 02 87 45 10
E-Mail: info@rollon.de
www.rollon.de

Netherlands

ROLLON B.V.
Ringbaan Zuid 8
6905 DB Zevenaar
Tel.: (+31) 316 581 999
Fax: (+31) 316 341 236
E-Mail: info@rollon.nl
www.rollon.nl

France

ROLLON S.A.R.L.
Les Jardins d'Eole, 2 allée des Séquoias
F-69760 Limonest
Tel.: (+33) (0)4 74 71 93 30
Fax: (+33) (0)4 74 71 95 31
E-Mail: infocom@rollon.fr
www.rollon.fr

USA

ROLLON Corporation
101 Bilby Road. Suite B
Hackettstown, NJ 07840
Tel.: (+1) 973 300 5492
Fax: (+1) 908 852 2714
E-Mail: info@rolloncorp.com
www.rolloncorp.com

All addresses of our global sales partners can also be found in the internet at www.rollon.com

Changes and errors excepted. The text and images may be used only with our permission.