www.bergab.ru Берг АБ bergab@ya.ru Тел. (495)-228-06-21, факс (495) 223-3071

SKF is an international industrial Group operating in some 130 countries and is world leader in bearings.

The company was founded in 1907 following the invention of the self-aligning ball bearing by Sven Wingquist and, after only a few years, SKF began to expand all over the world.

Today, SKF has some 43 000 employees and more than 80 manufacturing facilities spread throughout the world. An international sales network includes a large number of sales companies and some 20 000 distributors and retailers. Worldwide availability of SKF products is supported by a comprehensive technical advisory service.

The key to success has been a consistent emphasis on maintaining the highest quality of its products and services. Continuous investment in research and development has also played a vital role, resulting in many examples of epoch-making innovations.

The business of the Group consists of bearings, seals, special steel and a comprehensive range of other high-tech industrial components. The experience gained in these various fields provides SKF with the essential knowledge and expertise required in order to provide the customers with the most advanced engineering products and efficient service.

© Copyright SKF 1997
The contents of this catalogue are the copyright of the publisher and may not be reproduced (even extracts) unless permission is granted. Every care has been taken to ensure the accuracy of the information in this catalogue but no liability can be accepted for any errors or omissions.

Catalogue **4548 E**
Reg. 471 01:831 · 10 500 · 1997-12

Printed by Novum Grafiska AB, Sweden 97.24238

www.bergab.ru Берг АБ bergab@ya.ru Тел. (495)-228-06-21, факс (495) 223-3071

www.bergab.ru Берг АБ bergab@ya.ru Тел. (495)-228-06-21, факс (495) 223-3071

Symbols, abbreviations and remarks .....

How to use the catalogue 5

New kits and replacements 7

Index of manufacturers 9

Vehicle applications 10

VKC simplified application list 83

Dimension tables 93

Illustrations 98

Comparison lists 101

Technical information 111

www.bergab.ru Берг АБ bergab@ya.ru Тел. (495)-228-06-21, факс (495) 223-3071

Symbols and abbreviations

|->	From
->|	To
MOT	Engine
->|CH: xxxxxx	All chassis up to and incl. No. xxxxxx
CH: xxxxxx |->	All chassis from No. xxxxxx onwards
GBX:	Gearbox
GBX: 3	3 Speed gearbox
GBX: 4	4 Speed gearbox
GBX: 5	5 Speed gearbox
a)	Except hydraulic clutch
b)	Hydraulic clutch
c)	Check bearing dimensions page 93
d)	Except ACS system
h	Fork height contact
TT	All models
2WS	2 wheel steering
4WS	4 wheel steering
FWD	Front wheel drive
RWD	Rear wheel drive

www.bergab.ru Берг АБ bergab@ya.ru Тел. (495)-228-06-21, факс (495) 223-3071

How to use the catalogue

This catalogue will help you to easily identify the clutch release bearing you need.

Looking for the right bearing
By using the index you can easily find the right page in the catalogue in order to select the correct bearing.

Symbols, abbreviations and remarks
How to use the catalogue 5
New kits and replacements 7
Index of manufacturers 9
Vehicle applications 10
VKC simplified application list 83
Dimension tables 93
Illustrations 98
Comparison lists 101
Technical information 111

Index of manufacturers

ALFA ROMEO 10
AUDI 11
AUSTIN → ROVER 11
AUTOBIANCHI → LANCIA
BMW 11
CHRYSLER 12
CITROËN 12
DAEWOO 15
DAIHATSU 15
FIAT 17
FORD 21
FORD 24
HILLMAN 25
HONDA 25
HYUNDAI 27
INNOCENTI 27
ISUZU 28
IVECO 29
KIA 30
LADA 30
LANCIA 30
MAZDA 32
MERCEDES – BENZ 36
MITSUBISHI 38
MOSKVICH 43
NISSAN 43
OPEL 51
PERODUA 53
PEUGEOT 53
PORSCHE 56
PROTON 56
RENAULT 56
ROVER 58
SAAB 59
SEAT 59
SUBARU 61
SUZUKI 62
TALBOT 64
TOYOTA 65
VAUXHALL 77
VOLKSWAGEN 79
VOLVO 82
ZUK 82

Manufacturers and models
Under this heading the name of the manufacturer and various models will appear. Supplementary information such as chassis number and exceptions are also shown.

Model year
As changes in suspension design have arisen, the model year will help to select the right kit.

Engine type
Usual engine designations and numbers are displayed whenever needed.

Designation of the clutch release bearing.

ALFA ROMEO			
Alfa 33			
Alfa 33	TT		VKC 2123
Alfa 75			
Alfa 75 1.6, 1.8		86-92	VKC 2083
Alfa 75 2.0		87-92	VKC 2083
Alfa 75 2.0 Turbo Diesel		86-92	VKC 2083
Alfa 90			
Alfa 90 1.8		84-86	VKC 2083
Alfa 90 2.0		84-87	VKC 2083
Alfa 90 2.5		84-86	VKC 2083
Alfa 145/146			
Alfa 145/146 1.3, 1.6, 1.7		94 I->	VKC 2123
Alfa 145/146 2.0		94 I->	VKC 2501
Alfa 145/146 1.9 Turbo Diesel		94 I->	VKC 2501
Alfa 155			
Alfa 155 1.6		96 I->	VKC 2501
Alfa 155 1.7, 1.8		92 I->	VKC 2501
Alfa 155 2.0		92 I->	VKC 2501
Alfa 155 2.0 16V		96 I->	VKC 2501
Alfa 155 2.5 V6		92 I->	VKC 2168
Alfa 155 1.9 Turbo Diesel		93 I->	VKC 2501

Example
Looking for an Alfa 155 2.0 model year 93, follow the left column until the model 155 2.0 is found. After checking there is no restriction on engine type or model year, choose the right designation of the VKC.

www.bergab.ru Берг АБ bergab@ya.ru Тел. (495)-228-06-21, факс (495) 223-3071

www.bergab.ru Берг АБ bergab@ya.ru Тел. (495)-228-06-21, факс (495) 223-3071

	d	D	h	W	
VKC 1000	34.1	34.1 / 60	16	72	D1
VKC 2025	33	33	18	71.5	D1
VKC 2045	34	42 / 56	24.2	37.9	D2
VKC 2051	33	39.5	24	66	D10
VKC 2054	25	36 / 50	21	36	D2
VKC 2064	26.5	39.5	33.5	30.7	D31
VKC 2065	32	42 / 56	22.5	39.6	D32
VKC 2080	23.5	34	24	50	D10
VKC 2083	27.1	35 / 59	26.4	32	D2
VKC 2091	34	44	14.5	72	D3
VKC 2095	23.5	34	26	82.2	D10
VKC 2104	32	51	29.5	40	D24
VKC 2108	24	34	19.8	74	D3
VKC 2111	48	64	23.2	81.3	D11
VKC 2113	24.2	34	28.6	57	D4
VKC 2114	23.7	34	22	36	D4
VKC 2115	30	39.5	27.2	64.4	D11
VKC 2120	38.2	42 / 65	25	46	D2
VKC 2123	23.7	34	24	62	D11
VKC 2125	23.6	34	13.5	57.3	D3
VKC 2144	33.8	42 / 56	21.8	49.4	D33
VKC 2146	34	50	36.7	79.3	D4
VKC 2150	32	39.5	26	75.9	D10
VKC 2151	38.2	46 / 65.5	30	46	D2
VKC 2161	29.8	39.5	26.6	90.6	D11
VKC 2163	29.7	42 / 56	21.8	49.4	D33
VKC 2164	33.8	42 / 56	30.7	49.4	D33
VKC 2168	28	39.5	25.8	90.2	D10
VKC 2169	33	39.5	24	101	D11
VKC 2170	35.7	45 / 65	24.5	41	D27
VKC 2183	23.5	34	17.8	29.5	D24
VKC 2186	35	50	19.3	41.4	D24
VKC 2189	30	39.5	25.5	79.5	D10
VKC 2190	30	39.5	20.2	100	D11
VKC 2191	26	34	19.6	29.8	D24
VKC 2192	25.4	39.5	44.5	100	D6
VKC 2193	24.1	34	20.1	68	D10
VKC 2194	25.4	39.5	20.3	100	D6
VKC 2195		28	7.5		D28

	d	D	h	W	
VKC 2240	35	42 / 56	29.6	78.8	D1
VKC 2241	31	46	22.3	41.5	D2
VKC 2247	25.6	36 / 50	16.8	78.1	D7
VKC 2248	26	39.5	36.9	37	D14
VKC 2432	27.7	42 / 56	13	84.3	D7
VKC 2433	26	34	17.5	30	D24
VKC 2500	28	39.5	47.2	90.2	D10
VKC 2501	28	39.5	40.2	90.2	D10
VKC 2514	30	42 / 56	24.3	66.2	D7
VKC 2515	33	52	22.8	40	D24
VKC 2519	34	42 / 56	23.8	45.4	D33
VKC 2520	31.2	39.5	24	69.2	D11
VKC 2521	52.4	59 / 80	18	78	D15
VKC 2535	25.6	34	13.1	78.1	D21
VKC 2536	25.6	34	20.1	78	D21
VKC 2537	26.6	39.5	25.5	71	D10
VKC 2538	35	42 / 59	20.9	58	D7
VKC 2539		47.4 / 56	14	64.6	D30
VKC 2541		42 / 56	13.5	47	D30
VKC 2542	26.5			64.3	D8
VKC 2546	34	42 / 56	33.8	90.6	D7
VKC 2547	32.3	39.5	26.6	90.6	D11
VKC 2548	34	42 / 56	21.5	90.6	D7
VKC 2550	30.5	51	19	47.3	D26
VKC 2601	34	42 / 56	23.9	46.1	D33
VKC 3500	40	62	19	75	D9
VKC 3502	40	50	20	67	D9
VKC 3503	33	46	15	60	D9
VKC 3504	33	-	17	60	D9
VKC 3505	38	52	16	67	D9
VKC 3506	40	51	16	64	D9
VKC 3507	36	54	27	77	D10
VKC 3508	31	55	23	53	D11
VKC 3509	35	44	14	57	D9
VKC 3511	45	55	18	74	D9
VKC 3512	80	-	27	128	D12
VKC 3513	45	-	16	73	D12
VKC 3514	55	-	20	88	D12
VKC 3515	32	48	21	60	D11

Dimensional and visual identification

Provides further checking of the conformity of the clutch release bearing.

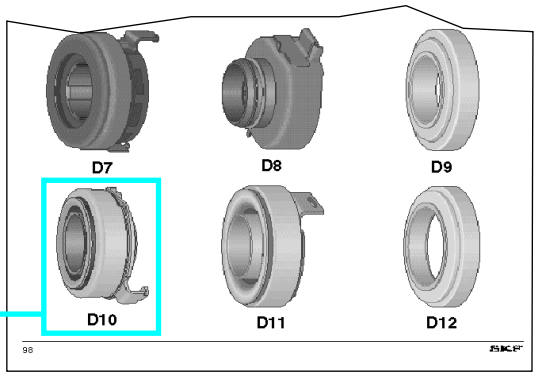

Conversion list – OE reference – VKC

This list enables you to find the right clutch release bearing corresponding to the original manufacturer's reference.

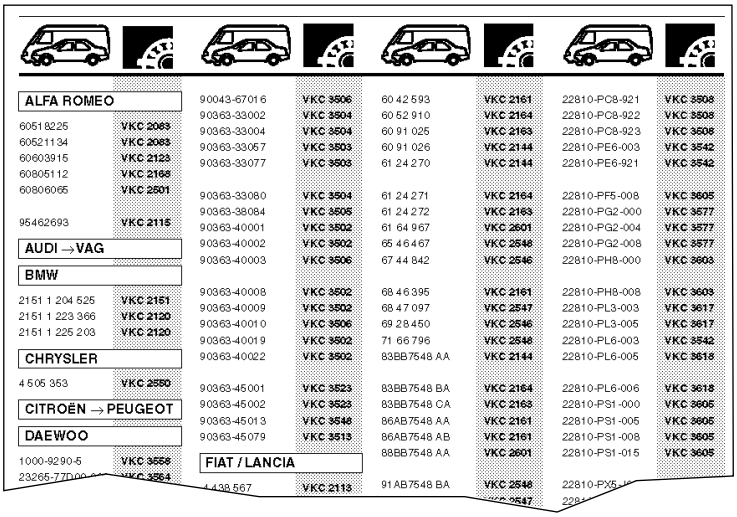

ALFA ROMEO	
60518225	VKC 2083
60521134	VKC 2083
60603915	VKC 2123
60805112	VKC 2168
60806065	VKC 2501
95462693	VKC 2115
AUDI → VAG	
BMW	
2151 1 204 525	VKC 2151
2151 1 223 366	VKC 2120
2151 1 225 203	VKC 2120
CHRYSLER	
4 505 353	VKC 2550
CITROËN → PEUGEOT	
DAEWOO	
1000-9290-5	VKC 3558
23265-77D00	VKC 3564

90043-67016	VKC 3506
90363-33002	VKC 3504
90363-33004	VKC 3504
90363-33057	VKC 3503
90363-33077	VKC 3503
90363-33080	VKC 3504
90363-38084	VKC 3505
90363-40001	VKC 3502
90363-40002	VKC 3502
90363-40003	VKC 3506
90363-40008	VKC 3502
90363-40009	VKC 3502
90363-40010	VKC 3506
90363-40019	VKC 3502
90363-40022	VKC 3502
90363-45001	VKC 3523
90363-45002	VKC 3523
90363-45013	VKC 3546
90363-45079	VKC 3513
FIAT / LANCIA	
4 438 567	VKC 2113

60 42 593	VKC 2161
60 52 910	VKC 2164
60 91 025	VKC 2163
60 91 026	VKC 2144
61 24 270	VKC 2144
61 24 271	VKC 2164
61 24 272	VKC 2163
61 64 967	VKC 2601
65 46 467	VKC 2546
67 44 842	VKC 2546
68 46 395	VKC 2161
68 47 097	VKC 2547
69 28 450	VKC 2546
71 66 796	VKC 2546
83BB7548 AA	VKC 2144
83BB7548 BA	VKC 2164
83BB7548 CA	VKC 2163
86AB7548 AA	VKC 2161
86AB7548 AB	VKC 2161
88BB7548 AA	VKC 2601
91AB7548 BA	VKC 2546
	VKC 2547

22810-PC8-921	VKC 3508
22810-PC8-922	VKC 3508
22810-PC8-923	VKC 3508
22810-PE6-003	VKC 3542
22810-PE6-921	VKC 3542
22810-PF5-008	VKC 3605
22810-PG2-000	VKC 3577
22810-PG2-004	VKC 3577
22810-PG2-008	VKC 3577
22810-PH8-000	VKC 3603
22810-PH8-008	VKC 3603
22810-PL3-003	VKC 3617
22810-PL3-005	VKC 3617
22810-PL6-003	VKC 3542
22810-PL6-005	VKC 3618
22810-PL6-006	VKC 3618
22810-PS1-000	VKC 3605
22810-PS1-005	VKC 3605
22810-PS1-008	VKC 3605
22810-PS1-015	VKC 3605
22810-PX5-[illegible]	
228[illegible]	

www.bergab.ru Берг АБ bergab@ya.ru Тел. (495)-228-06-21, факс (495) 223-3071

NEW KITS

VKC 2183	FIAT/LANCIA
VKC 2433	RENAULT/VOLVO
VKC 2520	MOSKVICH
VKC 2521	ZUK
VKC 2537	CITROËN/PEUGEOT/ TALBOT/FIAT/LANCIA
VKC 2538	ROVER
VKC 2539	SAAB
VKC 2541	OPEL/VAUXHALL
VKC 2542	CITROËN/PEUGEOT
VKC 2546	FORD
VKC 3649	TOYOTA
VKC 2547	FORD
VKC 2548	FORD
VKC 2550	CHRYSLER/ROVER
VKC 3640	TOYOTA
VKC 3641	NISSAN
VKC 3642	TOYOTA
VKC 3643	TOYOTA
VKC 3644	TOYOTA
VKC 3645	TOYOTA
VKC 3646	TOYOTA
VKC 3647	TOYOTA
VKC 3648	TOYOTA
VKC 3650	TOYOTA
VKC 3651	NISSAN
VKC 3652	MITSUBISHI
VKC 3654	HONDA
VKC 3659	MAZDA
VKC 3660	SUBARU
VKC 3661	MITSUBISHI
VKC 3665	TOYOTA
VKC 3666	HYUNDAI
VKC 3668	PERODUA

REPLACED KITS

VKC 2160	VOLVO	Replaced by	**VKC 2045**
VKC 2237	VOLVO	Replaced by	**VKC 2065**
VKC 3501	DAIHATSU/TOYOTA	Replaced by	**VKC 3502**
VKC 3510	FORD (J) /MAZDA	Replaced by	**VKC 3507**
VKC 3517	DAIHATSU/TOYOTA	Replaced by	**VKC 3504**
VKC 3518	DAIHATSU/MITSUBISHI	Replaced by	**VKC 3509**
VKC 3535	DAIHATSU/ISUZU/ MAZDA/MITSUBISHI/ TOYOTA	Replaced by	**VKC 3513**
VKC 3539	TOYOTA	Replaced by	**VKC 3575**
VKC 3544	DAIHATSU/NISSAN	Replaced by	**VKC 3519**
VKC 3547	DAIHATSU/MAZDA/ SUBARU/TOYOTA	Replaced by	**VKC 3506**
VKC 3561	NISSAN	Replaced by	**VKC 3560**
VKC 3583	TOYOTA	Replaced by	**VKC 3556**
VKC 3597	NISSAN	Replaced by	**VKC 3581**
VKC 3580	NISSAN	Replaced by	**VKC 3598**
VKC 3601	FORD (J) /MAZDA	Replaced by	**VKC 3507**

www.bergab.ru Берг АБ bergab@ya.ru Тел. (495)-228-06-21, факс (495) 223-3071

DELETED KITS

VKC 1002	CITROËN
VKC 1008	TALBOT
VKC 1011	CITROËN
VKC 1013	RENAULT
VKC 1014	RENAULT
VKC 1015	CITROËN
VKC 1018	JAGUAR
VKC 1019	JAGUAR
VKC 2006	OPEL
VKC 2007	FIAT
VKC 2016	RENAULT
VKC 2017	RENAULT
VKC 2018	FIAT/POLSKI
VKC 2019	MERCEDES-BENZ
VKC 2022	FIAT
VKC 2023	PEUGEOT/FORD
VKC 2028	ROVER
VKC 2031	FIAT
VKC 2037	RENAULT
VKC 2039	TALBOT
VKC 2040	FORD
VKC 2043	BMW
VKC 2050	PEUGEOT
VKC 2058	ALFA ROMEO
VKC 2059	TALBOT
VKC 2061	BMW
VKC 2073	TALBOT
VKC 2074	CITROËN
VKC 2075	TALBOT
VKC 2076	LANCIA
VKC 2077	BEDFORD
VKC 2079	CITROËN
VKC 2081	CITROËN
VKC 2099	FORD
VKC 2107	SKODA
VKC 2110	CITROËN
VKC 2116	MERCEDES-BENZ
VKC 2124	ROVER
VKC 2126	BMW
VKC 2128	PORSCHE
VKC 2143	FORD
VKC 2148	LADA
VKC 2152	RENAULT
VKC 2157	MERCEDES-BENZ
VKC 2159	VAG
VKC 2162	CITROËN
VKC 2165	FORD
VKC 2184	MERCEDES-BENZ
VKC 2207	PORSCHE
VKC 2211	VOLVO
VKC 2221	ALFA ROMEO
VKC 2222	ALFA ROMEO
VKC 2223	ALFA ROMEO
VKC 2224	LANCIA
VKC 2225	ROVER
VKC 2226	MERCEDES-BENZ
VKC 2227	OPEL
VKC 2228	PORSCHE
VKC 2229	PORSCHE
VKC 2233	SKODA
VKC 2234	VOLVO
VKC 2236	VOLVO
VKC 2272	FORD
VKC 2504	BMW
VKC 2511	FIAT
VKC 2530	TALBOT
VKC 2532	PORSCHE
VKC 2533	SKODA
VKC 2600	PSA
VKC 3533	NISSAN
VKC 3576	MAZDA

www.bergab.ru Берг АБ bergab@ya.ru Тел. (495)-228-06-21, факс (495) 223-3071

Index of manufacturers

ALFA ROMEO 10
AUDI 11
AUSTIN → ROVER 11
AUTOBIANCHI → LANCIA
BMW 11
CHRYSLER 12
CITROËN 12
DAEWOO 15
DAIHATSU 15
FIAT 17
FORD (EUR) 21
FORD (J) 24
HILLMAN 25
HONDA 25
HYUNDAI 27
INNOCENTI 27
ISUZU 28
IVECO 29
KIA 30
LADA 30
LANCIA 30
MAZDA 32
MERCEDES – BENZ 36
MITSUBISHI 38
MOSKVICH 43
NISSAN 43
OPEL 51
PERODUA 53
PEUGEOT 53
PORSCHE 56
PROTON 56
RENAULT 56
ROVER 58
SAAB 59
SEAT 59
SUBARU 61
SUZUKI 62
TALBOT 64
TOYOTA 65
VAUXHALL 77
VOLKSWAGEN 79
VOLVO 82
ZUK 82

www.bergab.ru Берг АБ bergab@ya.ru Тел. (495)-228-06-21, факс (495) 223-3071

ALFA ROMEO

Alfa 33

Alfa 33	TT	VKC 2123

Alfa 75

Alfa 75 1.6, 1.8	86-92	VKC 2083
Alfa 75 2.0	87-92	VKC 2083
Alfa 75 2.0 Turbo Diesel	86-92	VKC 2083

Alfa 90

Alfa 90 1.8	84-86	VKC 2083
Alfa 90 2.0	84-87	VKC 2083
Alfa 90 2.5	84-86	VKC 2083

Alfa 145/146

Alfa 145/146 1.3, 1.6, 1.7	94 |->	VKC 2123
Alfa 145/146 2.0	94 |->	VKC 2501
Alfa 145/146 1.9 Turbo Diesel	94 |->	VKC 2501

Alfa 155

Alfa 155 1.6	96 |->	VKC 2501
Alfa 155 1.7, 1.8	92 |->	VKC 2501
Alfa 155 2.0	92 |->	VKC 2501
Alfa 155 2.0 16V	96 |->	VKC 2501
Alfa 155 2.5 V6	92 |->	VKC 2168
Alfa 155 1.9 Turbo Diesel	93 |->	VKC 2501

Alfa 164

Alfa 164 2.0	87 |->	VKC 2168
Alfa 164 2.0 Turbo	87-92	VKC 2168
Alfa 164 3.0 V6	87 |-> c)	VKC 2168
Alfa 164 2.5 Turbo Diesel	87-92	VKC 2168

Alfasud

Alfasud	TT	VKC 2123

Alfetta

Alfetta	TT	VKC 2083

Arna

Arna	TT	VKC 2123

Giulietta

Giulietta L 1.8, 2.0		VKC 2083
Giulietta 2.0 Turbo Diesel		VKC 2083

GTV

GTV 2.0	81-85	VKC 2083
Coupe GTV 2.0 16V	95 |->	VKC 2501

Spider

Spider 2.0 16V	95 |->	VKC 2501

SZ

SZ 3.0 V6		VKC 2083

ALFA ROMEO

Gamma AR

AR6 2.5 Diesel	86-89	VKC 2115

www.bergab.ru Берг АБ bergab@ya.ru Тел. (495)-228-06-21, факс (495) 223-3071

AUDI

Audi 50

Audi 50	TT		**VKC 2125**

Audi 80 Avant

Audi 80 (Ch. 3-9,A -> 81-H-299000)	TT	73-08/86	**VKC 2091**
Audi 80 (Ch. 81-H-300001 -> 8A-N-200000)	TT	87-92	**VKC 2601**
Audi 80 (Ch. N-T)	TT	82 |->	**VKC 2601**

Audi 80 Quattro

Audi 80 (Ch. 81/85-F-000 0001->81/85-H-299999)	TT	85-87	**VKC 2091**
Audi 80 (Ch. 89-H-300001->8A-N-200000)	TT	87-92	**VKC 2601**
Audi 80 (Ch. N |->)	TT	92 |->	**VKC 2601**

Audi 90 Avant

Audi 90 (Ch. 3-9,A -> 81-H-299000)	TT	85-92	**VKC 2091**
Audi 90 (Ch. 81-H-300001 -> 8A-N-200000)	TT	85-92	**VKC 2601**

Audi 90 Quattro

Audi 90 (Ch. 81/85-F-000 0001-> 81/85-H-299999)	TT	85-87	**VKC 2091**
Audi 90 (Ch. 89-H-300001 -> 8A-N-200000)	TT	87-92	**VKC 2601**

Audi 100

Audi 100 Avant/Quattro (-> Ch. 44-J-200099)	TT	77-88	**VKC 2091**
Audi 100 Avant/Quattro (Ch. 44-J-200100 |->)	TT	88 |->	**VKC 2601**

Audi 200

Audi 200 Avant/Quattro	TT	->| 88	**VKC 2091**
	TT	89 |->	**VKC 2601**

Audi Cabriolet

Audi Cabriolet	TT	91 |->	**VKC 2601**

Audi Coupe

Audi Coupe/Quattro (Ch. B-J)	TT	81-88	**VKC 2091**
Audi Coupe/Quattro (Ch. K |->)	TT	89 |->	**VKC 2601**

Audi S6

S6 Quattro (Ch. V)	TT	97 |->	**VKC 2601**

Audi V8

Audi V8	TT	89 |->	**VKC 2601**

Audi "A" SERIES

A3 1.6	AEH	97 |->	**VKC 2195**
A3 1.8	AGN	97 |->	**VKC 2241**
A3 1.9 TDI Diesel	AGN	97 |->	**VKC 2241**
A4 Avant/Quattro (Ch. S-V)	TT	95 |->	**VKC 2601**
A6 Avant/Quattro (Ch. S-V)	TT	95 |->	**VKC 2601**
A8 Avant/Quattro (Ch. R-V)	TT	95 |->	**VKC 2601**

AUSTIN → ROVER

AUTOBIANCHI → LANCIA

BMW

BMW "3" Series

315 (E21)	TT	81-84	**VKC 2120**
316,318 (E21,E30,E36)			**VKC 2120**

www.bergab.ru Берг АБ bergab@ya.ru Тел. (495)-228-06-21, факс (495) 223-3071

www.bergab.ru Берг АБ bergab@ya.ru Тел. (495)-228-06-21, факс (495) 223-3071

BMW .../...

320 (E21,E30,E36)			h=25	VKC 2120
			h=30	VKC 2151
323 (E21,E30)			h=25	VKC 2120
			h=30	VKC 2151
325 (E30)				VKC 2120
324 Diesel,Turbo Diesel (E30)				VKC 2120
BMW "5" Series				
518 (E12,E28,E34)			h=25	VKC 2120
			h=30	VKC 2151
523 (E39)	M52			VKC 2120
525 (E12,E28,E34)				VKC 2120
528 (E28,E34,E39)				VKC 2120
530/533 (E12,E28,E34)				VKC 2120
525 Turbo Diesel (E39)	M51			VKC 2120
BMW "6" Series				
BMW "6" Series (E24)				VKC 2120
BMW "7" Series				
BMW "7" Series (E23,E32,E38)	TT			VKC 2120
BMW "M" Series				
M3 (E30,E36)				VKC 2120
M5 (E12,E28,E34)				VKC 2120
M6 (E24)				VKC 2120
BMW "Z" Series				
Z1				VKC 2120

CHRYSLER

Saratoga				
Saratoga 3.0	2972 cc			VKC 2550
Le baron				
Le baron 3.0	2972 cc			VKC 2550
Voyager				
Voyager	TT	90 |->		VKC 2550

CITROËN

2 CV				
2 CV 4,6 Special	435/602 cc	03/70-02/82		VKC 2054
		03/82 |->		VKC 2196
Acadiane				
Acadiane	TT	->| 02/82		VKC 2054
	TT	03/82 |->		VKC 2196
Ami				
Ami 6,8	602 cc		c)	VKC 2054
Ami Super	1015 cc	11/73 |->		VKC 2114
AX				
AX	GBX: MA			VKC 2216

www.bergab.ru Берг АБ bergab@ya.ru Тел. (495)-228-06-21, факс (495) 223-3071

www.bergab.ru Берг АБ bergab@ya.ru Тел. (495)-228-06-21, факс (495) 223-3071

Axel			
Axel 11R, 12TRS			**VKC 2114**
BX			
BX 1.1, 1.4		->| 06/88	**VKC 2108**
		07/88 |->	**VKC 2216**
BX 1.6, 1.9		->| 06/89	**VKC 2193**
		07/89 |->	**VKC 2216**
BX 1.9 GTI 16V			**VKC 2216**
BX 1.7 Diesel, 1.9 Diesel		->| 03/89	**VKC 2193**
		04/89 |->	**VKC 2216**
BX Turbo Diesel		04/89 |->	**VKC 2216**
CX			
CX			**VKC 2115**
DS / ID			
DS / ID	TT	06/72 |->	**VKC 2194**
Dyane			
Dyane 6	435 cc, 609 cc	08/68-02/82 .. .c)	**VKC 2054**
		03/82-83 ..... .c)	**VKC 2196**
Evasion			
Evasion 1.8, 2.0	XU7,XU10 / GBX: BE3		
	XU10J2TE - 1998 cc / GBX: ME		**VKC 2216**
Evasion 2.0 Turbo			**VKC 2537**
Evasion 1.9 Turbo Diesel	XUD9 - 1905 cc / GBX: ME		**VKC 2537**
Evasion 2.1 Turbo Diesel	XUD11BTE - 2088 cc / GBX: ML		**VKC 2537**
GS / GSA			
GS / GSA	TT		**VKC 2114**
LN / LNA			
LN / LNA 0.7	652 cc	->| 06/82	**VKC 2054**
		07/82-83	**VKC 2196**
LN / LNA 1.0, 1.1	954 cc, 1124 cc	->| 07/86	**VKC 2108**
Mehari			
Mehari	TT	05/82 |->	**VKC 2196**
Saxo			
Saxo 1.0, 1.1, 1.4			**VKC 2216**
Saxo 1.5 Diesel	TUD5 - 1527 cc		**VKC 2216**
Visa			
Visa 0.7	652 cc	->| 02/82	**VKC 2054**
		03/82 |->	**VKC 2196**
Visa 1.1, 1.2, 1.4			**VKC 2108**
Visa 1.6			**VKC 2193**
Visa 1.7 Diesel			**VKC 2193**
Xantia			
Xantia 1.6	XU5 - 1580 cc / GBX: BE3		**VKC 2216**
Xantia 1.8	XU7 - 1761 cc / GBX: BE3		**VKC 2216**
Xantia 1.8 16V	XU7JP4 - 1761 cc / GBX: BE3		**VKC 2216**
Xantia 2.0	XU10J2 - 1998 cc / GBX: BE3		**VKC 2216**
Xantia 2.0 Turbo	XU10J2TE - 1998 cc / GBX: ML		**VKC 2542**
Xantia 1.9 Diesel	XUD9 - 1905 cc / GBX: BE3		**VKC 2216**
Xantia 2.1 Turbo Diesel	XUD11BTE - 2088 cc / GBX: ML		**VKC 2542**

www.bergab.ru Берг АБ bergab@ya.ru Тел. (495)-228-06-21, факс (495) 223-3071

CITROËN .../...

XM

XM 2.0	XU10 - 1998 cc / GBX: BE3	07/94 |->	**VKC 2216**
XM 2.0 Turbo	XU10J2TE - 1998 cc / GBX: ME5T		**VKC 2239**
XM Station Wagon 2.0 16V	XU10J4R - 1998 cc / GBX: ME5T	07/94 |->	**VKC 2239**
XM 3.0 V6	ZPJ / GBX: ME5T	->| 06/94	**VKC 2239**
XM 3.0 V6 24V	ZPJ4 - 2963 cc / GBX: ME5T	->| 06/94	**VKC 2239**
XM 2.1 Diesel	XUD11A - 2138 cc / GBX: BE3		**VKC 2216**
XM 2.1 Turbo Diesel	XUD11 - 2088 cc / GBX: ME5T		**VKC 2239**

ZX

ZX 1.1	TU1 - 1124 cc / GBX: MA	91 |->	**VKC 2216**
ZX 1.4	TU3 - 1360 cc / GBX: MA	91 |->	**VKC 2216**
ZX 1.6	XU5 - 1580 cc / GBX: MA	91 |->	**VKC 2216**
ZX 1.8	XU7 - 1761 cc / GBX: MA	91 |->	**VKC 2216**
ZX 1.9	XU9 - 1905 cc / GBX: MA	91 |->	**VKC 2216**
ZX 2.0	XU10.2 - 1998 cc / GBX: MA	91 |->	**VKC 2216**
ZX 2.0 16V	XU10.4 - 1998 cc / GBX: MA	91 |->	**VKC 2216**
ZX 1.8 Diesel	XUD7 - 1769 cc / GBX: MA	91 |->	**VKC 2216**
ZX 1.9 Diesel	XUD9 - 1905 cc / GBX: MA	91 |->	**VKC 2216**
ZX 1.9 Turbo Diesel	XUD9TE - 1905 cc / GBX: MA	91 |->	**VKC 2216**

CITROËN

Berlingo

Berlingo 1.8, 1.9 Diesel	GBX: BE3		**VKC 2216**

C15

C15 0.9	"X" - 0,954 cc	84-05/88	**VKC 2108**
	TU9 - 0,954 cc / GBX: MA	05/88 |->	**VKC 2216**
C15 1.1	"E" - 1118 cc	84-05/88	**VKC 2193**
	"X" - 1124 cc / GBX: MA	84-05/88	**VKC 2108**
	TU1 - 1124 cc / GBX: MA	05/88 |->	**VKC 2216**
C15 1.3	1294 cc	84-05/88	**VKC 2193**
C15 1.4	"X" - 1360 cc	84-05/88	**VKC 2108**
	TU3 - 1360 cc / GBX: MA	05/88 |->	**VKC 2216**
C15 1.9	TU9 / GBX: MA	05/88 |->	**VKC 2216**
C15 1.8 Diesel	1769 cc	84-27/02/89	**VKC 2193**
		28/02/89 |->	**VKC 2216**

C25

C25 1.8 E	1796 cc		**VKC 2115**
C25 2.0 E	1971 cc		**VKC 2115**
C25 2.5 Diesel, Turbo Diesel	2498 cc		**VKC 2115**

C32

C32	TT		**VKC 2194**

C35

C35 2.0 E	1985 cc		**VKC 2194**
C35 2.2 Diesel	2195 cc		**VKC 2194**
C32 2.5 Diesel	2498 cc		**VKC 2192**

Jumpy

Jumpy 1.6i	SPI - 1580 cc / GBX: BE3		**VKC 2216**
Jumpy 1.9 Diesel	XUD9 - 1905 cc / GBX: BE3		**VKC 2216**
Jumpy 1.9 Turbo Diesel	XUD9TE - 1905 cc / GBX: ME5K,ML5E		**VKC 2537**

www.bergab.ru Берг АБ bergab@ya.ru Тел. (495)-228-06-21, факс (495) 223-3071

Jumper

Jumper 2.0	XU10J2 / GBX: ME		h=34,5	VKC 2239
Jumper 1.9 Diesel	XUD9 / GBX: ME		h=34,5	VKC 2239
Jumper 1.9 Turbo Diesel	XUD9TE / GBX: ME		h=34,5	VKC 2239
Jumper 2.5 Diesel	DJ5 - 2446 cc / GBX: ME5T	02/94 |->	.h=25,5	VKC 2537

DAEWOO

Cielo	1500 cc	94	VKC 2238
Damas/Labo		94	VKC 3564
Espero	1500 cc, 1600 cc, 1800 cc, 2000 cc	92-94	VKC 2238
Elf II			VKC 3558
Lemans	TT	92-94	VKC 2238
Prince Super Saloon N19	1800 cc	93-94	VKC 2186
Prince Super Saloon M19, P19	2000 cc	93-94	VKC 2215

DAIHATSU

4 x 4

4 X 4 F10	1000 cc	76-78	VKC 3503
4 X 4 F20	1600 cc	77-82	VKC 3506
4 X 4 F80, F85, F87	2000 cc	84 |->	VKC 3502
4 X 4 F70, F75, F77	Diesel	84 |->	VKC 3524
Applause A101	1600 cc	90-94	VKC 3578
Atrai M-S65, M-S65V	550 cc	83-84	VKC 3563

Charade

Charade G11, G30,E-G11,E-G11V,N-G30,N-G30V	1000 cc	83-87	VKC 3578
Charade E-G100S, E-G112S	1000 cc, 1300 cc 4WD Gasoline	87-88	VKC 3578
Charade G100, G101, G102, G112	1000 cc, 1300 cc	87-92	VKC 3578
Charade G200, G201, G202, G203	1000 cc, 1300 cc, 1500 cc, 1600 cc	93-94	VKC 3578
Charade G101,G100,G102	Diesel	87 |->	VKC 3509
Charade G20, G10	850 cc, 1000 cc	77-82	VKC 3509

Charmant

Charmant A10, 10V	1200 cc /GBX:4	74-79	VKC 3504
Charmant A10, 10V	1200 cc /GBX:5	74-76	VKC 3505
Charmant A30, 30V, 35, 35V, A55	1300 cc, 1500cc	78-87	VKC 3503
Charmant A20, 20V	1400 cc	74-77	VKC 3505
Charmant A20, 20V	1400 cc	77-80	VKC 3502
Charmant E-A55	1500 cc	83-86	VKC 3503
Charmant A40, A45, A60, A65	1600 cc	78-84	VKC 3502

Consorte

Consorte EP30, 40, 45	1000 cc	69-77	VKC 3503
Consorte EP30, 40, EP50	1000 cc, 1200 cc	71-77	VKC 3504
Consorte EP31, 42, 47, 50, 51	1200 cc /GBX:4	74-77	VKC 3503
Consorte EP31	1200 cc /GBX:5	71-76	VKC 3504
Consorte EP42, 47, 51	1200 cc /GBX:5	73-76	VKC 3505
Consorte EP42, 47, 51	1200 cc /GBX:5	76-77	VKC 3503

Feroza

Fellow Max, Max Coure L38, 38V	360 cc	70-77	VKC 3509
Feroza F300, F310	1600 cc	10/88-08/94	VKC 3588

Leeza

Leeza E-L100S	550 cc	86-88	VKC 3509
Leeza L100S, L100V	550 cc	86-90	VKC 3509

www.bergab.ru Берг АБ bergab@ya.ru Тел. (495)-228-06-21, факс (495) 223-3071

DAIHATSU .../...

Leeza E-L70S	550 cc	87-88	**VKC 3509**
Leeza L111S	660 cc		**VKC 3509**

Max Cuore

Max Cuore L40	550 cc	77-80	**VKC 3509**

Mira Cuore

Mira Cuore L55, 55V (MCL Models), 40, 40V, 45, 45V	550 cc	77-85	**VKC 3509**
Mira Cuore E-L55, E-L60	550 cc, 600 cc	80-85	**VKC 3509**
Mira Cuore M-L56V, M-L55V	550 cc	83-84	**VKC 3509**
Mira Cuore L70S, L70V, L71V	550 cc	85-90	**VKC 3509**
Mira Cuore E-L70S, L100S, M-L70V	550 cc	87-88	**VKC 3509**
Mira Cuore L60 (DK type clutch)	600 cc	83 |->	**VKC 3509**
Mira Cuore L200/210S, L200/210V	660 cc	90 |->	**VKC 3509**
Mira Cuore L80, L200, L201	850 cc	86-94	**VKC 3509**

Taft, Rocky

Rocky 4x4 F7#, F8#, F9#	2000 cc, 2800 cc	04/84-94	**VKC 3524**
Rugger F70, 75, 80, 81, 82	4WD 2800 cc Diesel	84-86	**VKC 3524**
Taft F10	1000 cc 4WD	74-78	**VKC 3503**
Taft F20, 25	1600 cc 4WD	76-81	**VKC 3506**
Taft F50,55, N-F60V	2500 cc 4WD	78-83	**VKC 3524**
Taft, Rocky F80,85	2000 cc 4WD	84 |->	**VKC 3502**
Taft, Rocky F60, 60V, 70, 71, 75, 76	2800 cc 4WD	82 |->	**VKC 3524**

DAIHATSU

Delta

Delta N-V54P, N-V58, N-V59	1.75t	83-86	**VKC 3524**
Delta N-V10D, N-V47D, N-V48	1.75t, 3000 cc	83-84	**VKC 3523**
Delta V30, V20, V69	2000 cc, 2500 cc	78-87	**VKC 3502**
Delta V69, V109	2000 cc, 2200 cc	78-84	**VKC 3523**
Delta V109	2200 cc	85 |->	**VKC 3502**
Delta N-V78, 79, 98, 99	2000 cc	85-86	**VKC 3523**
Delta V76, V78, V78D, V79	3400 cc	84-88	**VKC 3523**
Delta P-V75, P-V76	3000 cc	85-86	**VKC 3523**
Delta N-V76,N-V78D,N-V79	3000 cc, 2000 cc	84 |->	**VKC 3523**
Delta V10	Diesel	74-78	**VKC 3523**
Delta V57, V58, V59	Diesel	85 |->	**VKC 3524**
Delta V78, 79, 89, 98, 99	Diesel	85-89	**VKC 3523**
Delta V118	Diesel	89 |->	**VKC 3548**
Delta 1500 SV17	1600 cc	72-75	**VKC 3520**
Delta 1500 SV17	1600 cc	75-77	**VKC 3519**
Delta 1500 SV23, DV23	2000 cc	72-77	**VKC 3520**
Delta 1500 V34, V36	2000 cc	77-80	**VKC 3502**
Delta 1500 SV18	2500 cc	72-77	**VKC 3511**
Delta 1500 V24, 26	2500 cc	77 |->	**VKC 3524**
Delta 2000 V57,58,59	1.75 ton Diesel	85-86	**VKC 3524**
Delta 2000 V30, 32, 33, 35	2000 cc	77-80	**VKC 3502**
Delta 2000 V20, 23, 24, 25	2500 cc Diesel	72-83	**VKC 3524**
Delta 2000 SV26, DV26	2500 cc Diesel	77-80	**VKC 3511**
Delta 2000 V57	2800 cc Diesel	84 |->	**VKC 3524**
Delta 2000 V10, 11, 12	3000 cc Diesel	77-84	**VKC 3523**
Delta 2000 V75, 76, 78, 79, 98, 99	3000 cc, 3500 cc - Diesel	84-89	**VKC 3523**
Delta 2000 750	1200 cc	I-> 71	**VKC 3505**

www.bergab.ru Берг АБ bergab@ya.ru Тел. (495)-228-06-21, факс (495) 223-3071

Delta 2000 750	1200 cc, 1300 cc	71-79	**VKC 3506**
Delta 2000 750	1300 cc	79-82	**VKC 3502**
Delta Tipper V30	2000 cc	77-82	**VKC 3502**
Delta Tipper V20	2500 cc Diesel	77-80	**VKC 3524**
Delta Tipper V10	3000 cc Diesel	77-84	**VKC 3523**
Delta Wide KB10, 11	1200 cc, 1300 cc	76-79	**VKC 3506**
Delta Wide KB12	1300 cc	79-84	**VKC 3502**
Delta Wide KB 26V, YB26V, YB20G	1300 cc, 1600 cc, 1800 cc	82 |->	**VKC 3502**
Delta Wide TB10, 11	1600 cc	76 |->	**VKC 3506**
Delta Wide TB15	1800 cc	78 |->	**VKC 3502**
Delta Wide CB21G, 26V, YB21G	1800 cc, 2000 cc	83 |->	**VKC 3502**
Hi-Jet			
Hi-Jet M-S75,M-S70, S75, S76	1000 cc, 850 cc	84-86	**VKC 3588**
Hi-Jet M-S65, M-S65V, M-S66V, S65	550 cc	81-86	**VKC 3563**
Hi-Jet M-S80, M-S80V, M-S81	550 cc	86 |->	**VKC 3588**
Hi-Jet S70	850 cc, 1000 cc	82-86	**VKC 3563**
Hi-Jet S84, S85, S86	850 cc, 1000 cc	90-94	**VKC 3588**
Hi-Jet S77	Diesel	85-86	**VKC 3588**
Hi-Jet 55 Cab S40, S60	550 cc	76-78	**VKC 3509**
Hi-Jet 55 Cab S40, S60	550 cc	79-80	**VKC 3563**
Hi-Jet Atrai S82C, P, V	660 cc	90 |->	**VKC 3588**
Hi-Jet Cab S38, 38V, 40T, 40V	360 cc, 550 cc	71-81	**VKC 3509**
Hi-Jet Cab S80, 81	550 cc	86 |->	**VKC 3588**
Hi-Jet Cab S60, 60V, 65, 65V, 66, 66V	550 cc- 55 Wide	77-86	**VKC 3563**
Hi-Jet Cab S84,85,86,S70,75,76,84,85,86 P,T,V Series	850 cc, 1000 cc	82 |->	**VKC 3588**
Light / Micro Bus			
Light Bus V32, 34	2000 cc	77-82	**VKC 3502**
Light Bus V22, 24	2500 cc Diesel	77-83	**VKC 3524**
Light Bus DV28N	3000 cc Diesel	72-75	**VKC 3513**
Light Bus V12	3000 cc Diesel	77-84	**VKC 3523**
Micro Bus SV16N, 17N, 25N, 27N, 151N	1500 cc, 1600 cc, 1900 cc	67-74	**VKC 3520**

FIAT

124			
124	TT	66-77	**VKC 2064**
125			
125 1.6		68-72	**VKC 2064**
126			
126 / 126 Bis	TT		**VKC 2113**
127			
127 0.9	100 GL - 903 cc		**VKC 2095**
127 1050	1049 cc / GBX: 4		**VKC 2095**
	1049 cc / GBX: 5		**VKC 2168**
127 1.3 Sport	127 A3.000 - 1301 cc		**VKC 2095**
127 1.3 Diesel	127 A5.000 - 1301 cc		**VKC 2168**
128			
128 1.1, 1.3		69-80	**VKC 2168**
131			
131	TT		**VKC 2064**
132			
132	TT		**VKC 2064**

www.bergab.ru Берг АБ bergab@ya.ru Тел. (495)-228-06-21, факс (495) 223-3071

FIAT .../...

147			
147/127 Rustica			**VKC 2168**
500			
500 R	110 F.000 - 450 cc		**VKC 2113**
Argenta			
Argenta	TT		**VKC 2064**
Barchetta			
Barchetta 1.8 16V	1750 cc	95 |->	**VKC 2501**
Bravo-Brava			
Bravo-Brava 1.4	1370 cc	95 |->	**VKC 2183**
Bravo-Brava 1.6	1580 cc	95 |->	**VKC 2168**
Bravo-Brava 1.8	1747 cc	95 |->	**VKC 2501**
Bravo 2.0	1998 cc	95 |->	**VKC 2501**
Bravo-Brava 1.9 Diesel	1929 cc	95 |->	**VKC 2168**
Bravo-Brava 1.9 Turbo Diesel	1910 cc	95 |->	**VKC 2501**
Campagnola			
Campagnola	TT		**VKC 2064**
Cinquecento			
Cinquecento 0.7	704 cc		**VKC 2113**
Cinquecento 0.9	899 cc, 903 cc		**VKC 2095**
Cinquecento 1.1	1108 cc		**VKC 2183**
Croma			
Croma	TT		**VKC 2168**
Coupe			
Coupe 1.8 16V	1750 cc	93 |->	**VKC 2501**
Coupe 2.0 16V (FA)	1995 cc	93-95	**VKC 2501**
Coupe 2.0 20V (175AXC)	182A1.000 - 2000 cc	96 |->	**VKC 2501**
Duna			
Duna	TT		**VKC 2168**
Marea			
Marea 1.4	1370 cc	96 |->	**VKC 2183**
Marea 1.6 16V	1580 cc	96 |->	**VKC 2168**
Marea 1.8		96 |->	**VKC 2501**
Marea 2.0		96 |->	**VKC 2501**
Marea 1.9 Turbo Diesel		96 |->	**VKC 2501**
Panda			
Panda 650		80-85	**VKC 2113**
Panda 750		86-91	**VKC 2095**
Panda 850		80-85	**VKC 2095**
Panda 900		80-91	**VKC 2095**
Panda 1.0 4X4	965 cc	83-85	**VKC 2095**
Panda 1000 Fire		86-91	**VKC 2095**
Panda 1.3 Diesel		86-91	**VKC 2095**
Panda	TT	92 |->	**VKC 2095**
Punto			
Punto 55 1.1 (176AA,AH,AQ)	176A6.000,176B2.000 - 1108 cc	93 |->	**VKC 2183**
Punto 60 1.2 (176AB,AP,AR,BB)	176A7.000,B1.000,B4.000 - 1242 cc	93 |->	**VKC 2183**

Punto 75 1.2 (176AC)	176A8.000 - 1242 cc	94 |->		**VKC 2183**
Punto 1.4 GT Turbo (176AD,AS)	176A4.000,B6.000 - 1372 cc	93 |->		**VKC 2501**
Punto 90 1.6 (176AL)	176A9.000 - 1581 cc	94 |->		**VKC 2183**
Punto 1.7 Diesel		93 |->		**VKC 2183**
Punto 1.7 Turbo Diesel		93 |->		**VKC 2168**
Regata				
Regata 1.1, 1.3				**VKC 2168**
Regata 1.5			h=26	**VKC 2168**
			.h=40	**VKC 2501**
Regata 1.6		83-90	.h=26	**VKC 2500**
		87-90	.h=40	**VKC 2501**
Regata 100 S 1.6i	138B3. - 1585 cc	83-08/84		**VKC 2168**
		09/84-90		**VKC 2500**
Regata 1.7 Diesel				**VKC 2168**
Regata 1.9 Diesel	1929 cc	85 ->| 90		**VKC 2168**
Regata 1.9 Turbo Diesel	1929 cc	86 ->| 04/87		**VKC 2168**
		05/87 |->		**VKC 2501**
Spider				
Spider 2000	1995 cc			**VKC 2064**
Strada-Ritmo				
Strada-Ritmo except Diesel				**VKC 2168**
Strada-Ritmo 1.7 Diesel	1697 cc,1714 cc			**VKC 2168**
Strada-Ritmo 1.9 Diesel	1929 cc	->| 04/87		**VKC 2168**
		05/87 |->		**VKC 2501**
Tempra				
Tempra 1.4	1372 cc			**VKC 2168**
Tempra 1.6	1581 cc			**VKC 2168**
Tempra 1.8	1756 cc			**VKC 2501**
Tempra 2.0	1995 cc		h=40	**VKC 2501**
			.h=26	**VKC 2168**
Tempra 1.9 Diesel	1929 cc			**VKC 2168**
Tempra 1.9 Turbo Diesel	1929 cc			**VKC 2501**
Tipo				
Tipo 1.0	999 cc	88-93		**VKC 2168**
Tipo 1.1	1108 cc	93 |->		**VKC 2168**
Tipo 1.4	1370 cc	88 |->		**VKC 2168**
Tipo 1.6	1580 cc	88 |->		**VKC 2168**
Tipo 1.6 (160AP)	DOHC	88-91		**VKC 2501**
Tipo 1.8, 1.8 16V		90 |->		**VKC 2501**
Tipo 2.0, 2.0 16V		90 |->		**VKC 2501**
Tipo 1.7 Diesel	1697 cc	88 |->		**VKC 2168**
Tipo 1.9 Diesel	1929 cc	88 |->		**VKC 2168**
Tipo 1.9 Turbo Diesel	1929 cc	88 |->		**VKC 2501**
Uno				
Uno 0.9		83-95		**VKC 2095**
Uno 1.0		83-95	.c)	**VKC 2095**
			.c)	**VKC 2168**
			.c)	**VKC 2183**
Uno 1.1			c)	**VKC 2095**
			.c)	**VKC 2168**
			.c)	**VKC 2183**
Uno SX 1.3		83-89		**VKC 2095**

FIAT .../...

Uno 1.3 Turbo (146EQ)		89-93		**VKC 2501**
Uno 1.4	146C1.000 - 1372 cc	89-95	c)	**VKC 2168**
		02/93-95	c)	**VKC 2183**
Uno 1.4 Turbo		89-93		**VKC 2501**
Uno 1.5			c)	**VKC 2168**
			c)	**VKC 2501**
			c)	**VKC 2183**
Uno 1.3 Diesel		83-95		**VKC 2095**
Uno 1.4 Turbo Diesel	1367 cc	83-95		**VKC 2168**
Uno 1.7 Diesel		83-95		**VKC 2168**
Uno 1.7 Turbo Diesel	1697 cc	83-89		**VKC 2168**
Uno 1.9 Diesel		89-95		**VKC 2168**
Ulysse				
Ulysse 1.8	LWF - 1750 cc	94 |->		**VKC 2216**
Ulysse 2.0	RFU - 1998 cc	94 |->		**VKC 2216**
Ulysse 2.0 Turbo	RGX - 1998 cc	94 |->		**VKC 2537**
Ulysse 1.9 Turbo Diesel	D8B - 1905 cc	94 |->		**VKC 2537**
Ulysse 2.1 Turbo Diesel	P8C - 2088 cc	94 |->		**VKC 2537**
X 1/9				
X 1/9	TT			**VKC 2168**

FIAT

241				
241 1.4i/1.9i	1438 cc, 1895 cc			**VKC 2168**
242				
242 1.6 E/2.0 E	1585 cc, 1995 cc			**VKC 2194**
242 2.2 Diesel	2175 cc			**VKC 2194**
242 Diesel 2500	2500 cc			**VKC 2192**
Ducato				
Ducato 1.7		90-94		**VKC 2115**
Ducato 1.8		81-90		**VKC 2115**
Ducato 2.0		81-94		**VKC 2115**
		95 |->		**VKC 2239**
Ducato 1.9 Diesel	1930 cc	90-01/94		**VKC 2115**
Ducato 1.9 Diesel	1930 cc	02/94 |->		**VKC 2239**
Ducato 2.5 Diesel	2445 cc	81-94		**VKC 2115**
		95 |->		**VKC 2239**
Ducato 1.9 Turbo Diesel	1930 cc	90-01/94		**VKC 2115**
		95 |->		**VKC 2239**
Ducato 2.5 Turbo Diesel	2445 cc	81-01/94		**VKC 2115**
Fiorino				
127 Fiorino 0.9		78-81		**VKC 2095**
127 Fiorino 1.05		78-81		**VKC 2095**
	GBX: C501	81-88		**VKC 2095**
	Except GBX: C501	81-88		**VKC 2168**
Fiorino 1.1		88-93		**VKC 2168**
Fiorino 1.3		88 |->		**VKC 2168**
Fiorino 1.4		93 |->		**VKC 2168**
Fiorino 1.5		88-93		**VKC 2168**
Fiorino 1.6		93 |->		**VKC 2168**

www.bergab.ru Берг АБ bergab@ya.ru Тел. (495)-228-06-21, факс (495) 223-3071

Fiorino 1.3 Diesel		81-93	VKC 2168
Fiorino 1.7 Diesel		88 |->	VKC 2168
Scudo			
Scudo 1.6	1581 cc	95 |->	VKC 2216
Scudo 1.9 Diesel	1905 cc	95 |->	VKC 2216
Scudo 1.9 Turbo Diesel	1905 cc	95 |->	VKC 2537
Talento			
Talento 2.0		88-90	VKC 2115
Talento 1.9 Diesel		88-94	VKC 2115

FORD EUR

Capri			
Capri 1.3		->| 12/73	VKC 2164
		01/74 |->	VKC 2144
Capri 1.6	GBX: 2/3	12/68 |->	VKC 2164
	GBX: F/E	12/68 |->	VKC 2144
Capri 2.0			VKC 2144
Capri 2.3 V6; 2.6 V6			VKC 2144
Capri 2.8 V6; 3.0 V6			VKC 2144
Consul			
Consul			VKC 2144
Cortina			
Cortina 1.3			VKC 2144
Cortina 1.6		h=22	VKC 2144
		h=31	VKC 2164
Escort			
Escort 0.9, 1.1,1.3,1.4		01/75-07/80	VKC 2163
		08/80-08/95	VKC 2161
	Except GBX: MT75	09/95 |->	VKC 2548
	GBX: MT75	01/95-08/95	VKC 2548
Escort 1.6	TL16 (OHC) - 1597 cc	->| 07/80	VKC 2144
	HL16 (CVH) - 1597 cc	->| 06/80	VKC 2163
	Except GBX: MT75	07/80-08/95	VKC 2161
	Except GBX: MT75	09/95 |->	VKC 2548
	GBX: MT75	01/95-08/95	VKC 2548
	CHT - 1597 cc	12/83 |->	VKC 2161
Escort 1.6 16V	GBX: BC	01/92 |->	VKC 2161
	GBX: MT75	01/92 |->	VKC 2548
Escort 1.8 16V	GBX: BC	01/92 |->	VKC 2161
	GBX: MT75	01/92 |->	VKC 2548
Escort 2.0	TL20 (OHC) - 1993 cc	->| 07/80	VKC 2144
Escort 2.0 16V Cosworth	DL20 (DOHC) - 1993 cc	03/92 |->	VKC 2601
Escort 2.0	DH20 (DOHC) - 1993 cc	09/91 |->	VKC 2548
Escort 1.6 Diesel	LT - 1608 cc	->| 08/95	VKC 2161
Escort 1.8 Diesel	Except GBX: BC	08/88-07/95	VKC 2161
	Except GBX: BC	08/95 |->	VKC 2548
	GBX: BC	08/90 |->	VKC 2547
Escort 1.8 Turbo Diesel	D18T - 1753 cc	08/88 |->	VKC 2144
	D18TI - 1753 cc	11/93 |->	VKC 2548
Fiesta			
Fiesta 0.9, 1.0	957 cc, 999 cc	->| 08/95	VKC 2161
		09/95 |->	VKC 2548

www.bergab.ru Берг АБ bergab@ya.ru Тел. (495)-228-06-21, факс (495) 223-3071

www.bergab.ru Берг АБ bergab@ya.ru Тел. (495)-228-06-21, факс (495) 223-3071

FORD (EUR) .../...

Fiesta 1.1	Except GBX: MTX75	->| 08/95	**VKC 2161**
	GBX: MTX75	01/95-08/95	**VKC 2548**
	GBX: BC	89-08/95	**VKC 2547**
		09/95 |->	**VKC 2548**
Fiesta 1.3	HL 13 (CVH) / Except GBX: MTX75	->| 08/95	**VKC 2161**
	HL 13 (CVH) / GBX: MTX75	01/95-08/95	**VKC 2548**
	HL 13 (CVH) / GBX: BC	89-08/95	**VKC 2547**
	HL 13 (CVH)	09/95 |->	**VKC 2548**
	BL13 (OHV) / GBX: BC	89-08/95	**VKC 2547**
	BL13 (OHV) - 1296 cc	09/95 |->	**VKC 2548**
Fiesta 1.4	Except GBX: MTX75	->| 08/95	**VKC 2161**
	GBX: MTX75	01/95-08/95	**VKC 2548**
	GBX: BC	89-08/95	**VKC 2547**
		09/95 |->	**VKC 2548**
Fiesta 1.6	Except GBX: MTX75	->| 08/95	**VKC 2161**
	GBX: MTX75	01/95-08/95	**VKC 2548**
	GBX: BC	89-08/95	**VKC 2547**
		09/95 |->	**VKC 2548**
Fiesta 1.6 16V	Except GBX: BC	03/92 |->	**VKC 2161**
	GBX: BC	89-08/95	**VKC 2547**
Fiesta 1.8 16V	Except GBX: BC	03/92 |->	**VKC 2161**
	GBX: BC	89-08/95	**VKC 2547**
Fiesta 1.6 Diesel	LT - 1608 cc	->| 08/95	**VKC 2161**
Fiesta 1.8 Diesel	Except GBX: BC	08/88-10/95	**VKC 2161**
	Except GBX: BC	11/95 |->	**VKC 2548**
	GBX: BC	01/89 |->	**VKC 2547**
Fiesta 1.8 Turbo Diesel	D18TI - 1753 cc	01/89 |->	**VKC 2144**

Granada

Granada 1.6			**VKC 2144**
Granada 1.7 V4	TV17 - 1699 cc		**VKC 2144**
Granada 1.8	Except GBX: MT75		**VKC 2144**
	GBX: MT75		**VKC 2601**
Granada 2.0 6V	TV20 - 1999 cc	74-85	**VKC 2144**
Granada 2.0	TL 20 - 1999 cc. Except GBX: MT75		**VKC 2144**
	TL 20 - 1999 cc. GBX: MT75		**VKC 2601**
Granada 2.0	DL20 - 1999 cc	89 |->	**VKC 2601**
Granada 2.3 6V; 2.6 6V; 2.8 6V; 3.0 6V			**VKC 2144**
Granada 1.9 Diesel	Except GBX: MT75	->| 06/88	**VKC 2144**
	GBX: MT75	09/88 |->	**VKC 2601**
Granada 2.1 Diesel	Except GBX: MT75	->| 06/88	**VKC 2144**
	GBX: MT75	09/88 |->	**VKC 2601**
Granada 2.5 Diesel	Except GBX: MT75	82-08/88	**VKC 2144**
	GBX: MT75	09/88-08/93	**VKC 2601**
Granada 2.5 Turbo Diesel	GBX: MT75	12/88 |->	**VKC 2601**

Mondeo

Mondeo 1.6 16V		->| 08/94	**VKC 2546**
Mondeo 1.8 16V		->| 08/94	**VKC 2546**
Mondeo 2.0 16V		->| 08/94	**VKC 2546**
Mondeo 1.8 TDI		->| 08/94	**VKC 2548**

www.bergab.ru Берг АБ bergab@ya.ru Тел. (495)-228-06-21, факс (495) 223-3071

www.bergab.ru Берг АБ bergab@ya.ru Тел. (495)-228-06-21, факс (495) 223-3071

Orion			
Orion 1.3		08/80-08/95	**VKC 2161**
	Except GBX: MT75	09/95 |->	**VKC 2548**
	GBX: MT75	01/95-08/95	**VKC 2548**
Orion 1.4	HL14 (CVH) - 1392 cc	86-07/90	**VKC 2161**
Orion 1.6	Except GBX: MT75	07/80-08/95	**VKC 2161**
	GBX: MTX75	01/95-08/95	**VKC 2548**
	Except GBX: MT75	09/95 |->	**VKC 2548**
Orion 1.6 16V	GBX: BC	01/92 |->	**VKC 2161**
	GBX: MTX75	01/92 |->	**VKC 2548**
Orion 1.8 16V	GBX: BC	01/92 |->	**VKC 2161**
	GBX: MTX75	01/92 |->	**VKC 2548**
Orion 1.8 Diesel	Except GBX: BC	08/88-07/95	**VKC 2161**
	Except GBX: BC	08/95 |->	**VKC 2548**
	GBX: BC	08/90 |->	**VKC 2547**
Orion 1.8 Turbo Diesel	D18T - 1753 cc	08/88 |->	**VKC 2144**
		11/93-11/94	**VKC 2548**
		12/95 |->	**VKC 2548**
Probe			
Probe 2.0		93 |->	**VKC 3507**
Probe 2.5		93 |->	**VKC 3507**
Sierra			
Sierra 1.3	TL13	08/82-02/87 .. .c)	**VKC 2163**
		08/82-02/87 .. .c)	**VKC 2164**
Sierra 1.6	GBX: 4 / Except MTX75	08/82 |-> ..... .c)	**VKC 2164**
	GBX: 5 / Except MTX75	08/82 |-> ..... .c)	**VKC 2144**
	GBX: MTX75	08/82 |-> ..... .c)	**VKC 2601**
Sierra 1.8	Except GBX: MT75	08/82 |->	**VKC 2144**
	GBX: MT75	87 |->	**VKC 2601**
Sierra 2.0	Except GBX: MT75	08/82 |->	**VKC 2144**
	GBX: MT75	87 |->	**VKC 2601**
Sierra 2.0 16V Cosworth	YB - 1995 cc	->| 01/90	**VKC 2144**
		02/90 |->	**VKC 2601**
Sierra 2.3 6V		85 |->	**VKC 2144**
Sierra 2.3	LL23 - 2300 cc GBX: MT75	87 |->	**VKC 2601**
Sierra 2.8 6V		85 |->	**VKC 2144**
Sierra 2.9 6V	GBX: E/9	h=22	**VKC 2144**
Sierra 2.9 6V	GBX: 3	h=30.5	**VKC 2164**
Sierra 1.8 Turbo Diesel		90-95	**VKC 2144**
Sierra 2.3 Diesel	Except GBX: MT75		**VKC 2144**
	GBX: MT75		**VKC 2601**
Scorpio			
Scorpio 1.8	Except GBX: MT75	->| 01/92	**VKC 2144**
	GBX: MT75	->| 01/92	**VKC 2601**
Scorpio 2.0	Except GBX: MT75	->| 01/92	**VKC 2144**
	GBX: MT75	->| 01/92	**VKC 2601**
Scorpio 2.4	Except GBX: MT75	86-89	**VKC 2144**
	GBX: MT75	90 |->	**VKC 2601**
Scorpio 2.9	Except GBX: MT75	86-89	**VKC 2144**
	GBX: MT75	90 |->	**VKC 2601**
Scorpio 2.5 Diesel; Turbo Diesel	Except GBX: MT75	->| 08/93	**VKC 2144**
	GBX: MT75	->| 08/93	**VKC 2601**

www.bergab.ru Берг АБ bergab@ya.ru Тел. (495)-228-06-21, факс (495) 223-3071

www.bergab.ru Берг АБ bergab@ya.ru Тел. (495)-228-06-21, факс (495) 223-3071

FORD (EUR) .../...

Taunus

Taunus 1.3, 1.5		->I 83	VKC 2144
Taunus 1.6		->| 83 h=22	VKC 2144
		->| 83 h=30.5	VKC 2164
Taunus 1.7		->| 82	VKC 2144
Taunus 2.0; 2.3; 2.8; 2.9			VKC 2144

FORD (EUR)

Courier

Courier 1.3			VKC 2161
Courier 1.8 Diesel			VKC 2161

Econovan

Econovan 2.0 Diesel			VKC 3507

P100

P100 1.6		82-89	VKC 2144
P100 2.0		87-02/89	VKC 2144
		03/89-92	VKC 2601
P100 1.8 Turbo Diesel		89-92	VKC 2144

Transit

Transit 1.6	Except GBX: MT75	01/78-08/88	VKC 2144
	GBX: MT75	10/88 |->	VKC 2601
Transit 2.0	GBX: MT75	10/88 |->	VKC 2601
	DL20H (DOHC)	08/94 |->	VKC 2601
Transit 2.5 Diesel		10/88 |->	VKC 2601

Tourneo

Tourneo 2.0			VKC 2601
Tourneo 2.5			VKC 2601

FORD (J)

Courier

Courier	1600 cc, 1800 cc	71 |->	VKC 3511
Courier	2000 cc	78 |->	VKC 3507

J80

J80	1400 cc	83 |->	VKC 3570
J80	2000 cc, 2200 cc	83 |->	VKC 3507

Laser

Laser	1300 cc	82 |->	VKC 3568
Laser	1500 cc	82-84	VKC 3568
Laser	1500 cc	84	VKC 3568
Laser	1500 cc Turbo	82-84	VKC 3507
Laser	1500 cc, 1600 cc	85 |->	VKC 3600
Laser	1700 cc	85 |->	VKC 3568

Spectron

Spectron	1800 cc, 2000 cc	83 |->	VKC 3507

Telstar/Virgo

Telstar/Virgo	1600 cc, 1800 cc, 2000 cc	82 |->	VKC 3507

www.bergab.ru Берг АБ bergab@ya.ru Тел. (495)-228-06-21, факс (495) 223-3071

www.bergab.ru Берг АБ bergab@ya.ru Тел. (495)-228-06-21, факс (495) 223-3071

HILLMAN

Paykan

Paykan			VKC 2240

HONDA

Accord

Accord CD, SD	1450 cc	72-74	VKC 3503
Accord SJ	1600 cc	76-80	VKC 3503
Accord SV,SY, SM, SZ	1600 cc, 1800 cc	78-81	VKC 3522
Accord SY	1600 cc	82-83	VKC 3508
Accord CA4, CA5	1600 cc, 2000 cc & 2000 cc PGM-FI	86-89	VKC 3508
Accord SV,SM	1600 cc, 1800 cc	78-83	VKC 3522
Accord SY,SZ	1600 cc, 1800 cc	81-83	VKC 3508
Accord AC,AD,CA1,CA2	1600 cc, 1800 cc	83 |->	VKC 3508
Accord E-AC100, E-AD100	1600 cc, 1800 cc	83-84	VKC 3508
Accord E-SY110, E-SZ100, E-SY100, E-SZ120	1800 cc	83-84	VKC 3508
Accord E-CA1-100, E-CA1-106, E-CA1-120, E-CA2-100, E-CA2-106	1800 cc	85-89	VKC 3508
Accord E-CA3-100, E-CA3-106, E-CA3-120, CA3	2000 cc	85-86	VKC 3605
Accord CA5	2000 cc DOHC PGM-FI	88-89	VKC 3605
Accord CB3,CB4,CB1, CB7	1800 cc, 2000 cc, 2200 cc	89-91	VKC 3577
Accord CC7	2000 cc, 2300 cc	92	VKC 3577

Acty / Ascot

Acty M-VH-110	550 cc	85-86	VKC 3503
Acty HA1, HA2, HH1, HH2	550 cc	88-90	VKC 3618
Acty AD,TA,TB,TC,VD,VF,VH	550 cc (All Models)	77 |->	VKC 3503
Ascot CB1,CB2;CB4,CB3	1800 cc, 2000 cc	89-90	VKC 3577

Ballade

Ballade SS(FE,FG,FX),SL,ST	1300 cc, 1500 cc	80 |->	VKC 3503
Ballade AE,AF	1300 cc, 1500 cc	83 |->	VKC 3542
Ballade E-AJ, E-AG, E-AE, E-AK, E-AH, E-AF100/110/120	1300 cc, 1500 cc	83-86	VKC 3542
Ballade E-AS100, E-AS110, E-AS120	1600 cc	85-86	VKC 3508

City / Pro

City L-VF100, L-VF110, L-VF120, E-AA100, E-FA	1200 cc	83-86	VKC 3503
City E-GA100	1200 cc	86 |->	VKC 3542
City Pro L-VF100, L-VF110, L-VF120, E-AA100, E-FA	1200 cc	83-86	VKC 3503

Civic

Civic SB500,600,700	1200 cc	77-79	VKC 3503
Civic 110,120,150,160,170,200,210	1200 cc, 1300 cc, 1500 cc	72-83	VKC 3503
Civic SB,SC,SE,SF,SK,SP,SL,SS,SR,ST,SG,SH,VB,VC,WD 1, 100	1200 cc, 1300 cc, 1500 cc	72-83	VKC 3503
Civic AL,AM,AG,AJ,AH,AK,SL,SS,WC,SP	1200 cc, 1300 cc, 1500 cc, 1500 cc PGM-FI	84-87	VKC 3542
Civic AR100	1300 cc 4WD Wagon	84-85	VKC 3603
Civic EG1, EG2, EH6	1500 cc, 1600 cc V-TEC	94-95	VKC 3577
Civic EG1, EG2, EH6	1500 cc, 1600 cc	93-95	VKC 3564
Civic EG3	1300 cc SOHC	92-94	VKC 3654
Civic E-AJ, E-AG, E-AE, E-AK, E-AH, E-AF100/120/130	1300 cc, 1500 cc	83-86	VKC 3542
Civic EE1,EE2,EE4,EY3	1400 cc, 1500 cc, 1600 cc - 2WD	88-90	VKC 3617
Civic E-AR110, E-AR120, E-AR100	1500 cc	85-86	VKC 3603
Civic EE2,EE4,EY3, AR	1500 cc 4WD	85-87	VKC 3603
Civic EG4	1500 cc -SOHC	92-94	VKC 3654
Civic ED6, ED7, CD3, CD4	1500 cc, 1600	88-90	VKC 3617
Civic EE2, EE4, EY3, EF4, EF5	1500 cc, 1600 cc 4WD	87-90	VKC 3603

www.bergab.ru Берг АБ bergab@ya.ru Тел. (495)-228-06-21, факс (495) 223-3071

HONDA .../...

Civic E-AT,,E-AU-110/120	1600 cc	85-86	**VKC 3508**
Civic EF9	1600 cc	89-90	**VKC 3605**
Civic EG6	1600 cc -DOHC	92-94	**VKC 3654**
Civic EG5	1600 cc -SOHC	92-94	**VKC 3654**
Civic Shuttle AN3, AE, AN7, AR	1500 cc	84-87	**VKC 3542**
Civic Shuttle EE2	1500 cc	88-89	**VKC 3617**
Civic Shuttle AR	1500 cc 4WD	85-86	**VKC 3603**
Civic Shuttle AN5,AN3,AN7,AR	1500 cc, 1500 cc 4WD	84-87	**VKC 3542**
Civic Shuttle EE4	1600 cc 4WD	88-89	**VKC 3603**
Concerto			
Concerto MA3	1600 cc	88-91	**VKC 3603**
Concerto HW	1400 cc, 1500 cc, 1600 cc	90-93	**VKC 3617**
CRX			
CRX AF	1500 cc	84-87	**VKC 3542**
CRX E-EF6-110,E-EF7-110	1500 cc, 1600 cc	88 |->	**VKC 3617**
CRX ED8,ED9	1500 cc, 1600 cc	88-89	**VKC 3617**
CRX EF7	1600 cc	89-90	**VKC 3617**
CRX EF8	1600 cc	89-90	**VKC 3605**
CRX ED9	1600 cc DOHC PGM-FI	86-87	**VKC 3508**
CRX ED9	1600 cc DOHC PGM-FI	88-90	**VKC 3617**
Integra			
Integra DA6, DA8	1600 cc	89-90	**VKC 3605**
Jazz/City			
Jazz/City AA, VF	1100 cc, 1200 cc	84-86	**VKC 3542**
Jazz/City AA & VF100-120	1200 cc	81-82	**VKC 3503**
Jazz/City AA120,140-150-500,GA1,VF120-130	1200 cc	82 |->	**VKC 3542**
Jazz/City E-GA1-100,E-GA2-100	1200 cc	87-88	**VKC 3542**
Legend			
Legend E-KA2,E-KA1-110/120	2000 cc, 2500 cc	85-86	**VKC 3577**
Legend HS	2500 cc, 2700 cc	86-88	**VKC 3577**
Legend KA3, KA4, KA5	2000 cc, 2700 cc	88-90	**VKC 3577**
Prelude			
Prelude SM,SN	1800 cc	78-83	**VKC 3522**
Prelude E-AB100/110/120	1800 cc	83-86	**VKC 3508**
Prelude AB,SN	1800 cc	83-86	**VKC 3508**
Prelude AB	1800 cc	87 |->	**VKC 3605**
Prelude BA1	2000 cc	85 |->	**VKC 3605**
Prelude E-BA4,E-BA5-100/110, BA4, BA5	2000 cc, 2000 cc DOHC PGM-FI	87-90	**VKC 3577**
Prelude BA	2000 cc, 2000 cc DOHC PGM-FI	86-87	**VKC 3605**
Prelude BB1, BB2, BB3	2000 cc, 2200 cc, 2300 cc	92-94	**VKC 3577**
Prelude BA8, BA9	2200 cc	91 |->	**VKC 3577**
Quint			
Quint DA2	1500 cc	86-89	**VKC 3542**
Quint E-SU100, E-SU110	1600 cc	83-84	**VKC 3508**
Quint E-DA1-100, E-DA2-100	1500 cc,1600 cc	86 |->	**VKC 3508**
Quint/Quint Integra SU	1600 cc	80-81	**VKC 3522**
Quint/Quint Integra SU	1600 cc	81-82	**VKC 3522**
Quint/Quint Integra SU,AV	1600 cc	82-85	**VKC 3508**
Quint/Quint Integra AV,DA1	1600 cc	85 |->	**VKC 3542**
Quint/Quint Integra E-DA5-100,E-DA7-100	1600 cc	89 |->	**VKC 3617**

www.bergab.ru Берг АБ bergab@ya.ru Тел. (495)-228-06-21, факс (495) 223-3071

TN

TN Acty M-TA/TB/TC-100/105/VD/VH-100/105	550 cc	83-84	**VKC 3503**
TN-7	360 cc	75-77	**VKC 3590**

Today

Today JW1	550 cc	85 |->	**VKC 3503**
Today M-JW1-100, M-JW1-120	550 cc	85-86	**VKC 3503**
Today JA1,JW2	550 cc	88-90	**VKC 3618**

Vigor / Accura

Vigour E-AC100, E-AD100	1600 cc, 1800 cc	83-84	**VKC 3508**
Vigour E-CA1-100,E-CA1-106,E-CA1/E-CA2-100,E-CA2-106/120	1800 cc	85-89	**VKC 3508**
Vigour E-CA3-100, E-CA3-106, E-CA3-120	2000 cc	85-86	**VKC 3605**
Vigour/Accura AC,AD,SZ,CA1/2/3	1800 cc, 2000 cc	81 |->	**VKC 3508**

HYUNDAI

Accent

Accent	1500 cc	95 |->	**VKC 3666**

Scoupe

Scoupe		90	**VKC 3515**

Elantra

Elantra	1500 cc, 1600 cc	92-93	**VKC 3515**
Elantra	1600 cc	95 |->	**VKC 3666**

Excel

Excel			**VKC 3515**

Grace

Grace		92-93	**VKC 3579**

Grandeur

Grandeur			**VKC 3515**

Pony

Pony 1		82-86	**VKC 3515**
Pony 1	1400 cc	87 |->	**VKC 3552**
Pony 2	1400 cc, 1500 cc	88	**VKC 3592**

Stellar/Sonata

Sonata	2000 cc, 2400 cc, 3000 cc	88-92	**VKC 3515**
Stellar/Sonata		86-87	**VKC 3552**
Y-11			**VKC 3515**

HYUNDAI

H100/Porter - 1 ton Truck

H100		07/93-06/94	**VKC 3579**
Porter - 1 ton Truck		92	**VKC 3579**

INNOCENTI

Minitre

Minitre 1.0		83-86	**VKC 3578**

Elba

Elba Cls 1.3 (Ch. 146CW)	146A5.000 - 1301 cc	91 |->	**VKC 2168**
Elba Cls 1.4 (Ch. 146EN,EQ)	146C5.000, 146D5.000 - 1372 cc	91 |->	**VKC 2168**
Elba Cls 1.5 (Ch. 146C9)	146C1.000 - 1498 cc	91 |->	**VKC 2168**

www.bergab.ru Берг АБ bergab@ya.ru Тел. (495)-228-06-21, факс (495) 223-3071

INNOCENTI .../...

Elba Cls 1.6 (Ch. 146EO)	146C6.000 - 1580 cc	91 |->	**VKC 2168**
Elba Cls 1.7 Diesel (Ch. 146DI,EI)	146B2.000 - 1697 cc	91 |->	**VKC 2168**

Mille Clip

Mille Clip 1.0 (Ch. 146EX)	146C7.000 - 994 cc	94 |->	**VKC 2168**
Mille Clip 1.4 (Ch. 146EI)	160A1.046 - 1372 cc	94 |->	**VKC 2168**
Mille Clip 1.7 Diesel (Ch. 146EO)	146B2.000 - 1697 cc	94 |->	**VKC 2168**

ISUZU

117

117 Coupe PA, PAD	1800 cc, 2000 cc, 2200 cc	73-81	**VKC 3505**

Aska

Aska JJ	1800 cc, 2000 cc	83 |->	**VKC 3553**
Aska E-JJ110, E-JJ120,N-JJ510	1800 cc, 2000 cc	85-86	**VKC 3553**

Florian

Florian PA, PAD	1600 cc, 1800 cc, 2000 cc	72-83	**VKC 3505**

Gemini

Gemini JT69, JT77	1300 cc, 1500 cc	86-88	**VKC 3553**
Gemini E-JT150, N-JT600	1500 cc	85-86	**VKC 3553**
Gemini JT151F, JT191F, JT191S	1500 cc, 1600 cc	90-91	**VKC 3553**
Gemini PF50, PF60, PFD60	1600 cc, 1800 cc & Diesel	74-85	**VKC 3505**

Piazza / Panero

Panero JT191F	1600 cc	90-91	**VKC 3553**
Piazza E-JR120,130	2000 cc	83-88	**VKC 3505**
Piazza JR30	2000 cc - XF, XJ, XG, XN	81-84	**VKC 3505**
Piazza, XS JR30	2000 cc - XS	84 |->	**VKC 3554**

Trooper

Trooper UBS		92-93	**VKC 3606**
Trooper UBS13, UBS52	2000 cc, 2200 cc, 2300 cc Diesel	81 |->	**VKC 3505**
Trooper UB16	2300 cc 4WD	86 |->	**VKC 3505**
Trooper UBS SERIES	2300 cc & Diesel	87-90	**VKC 3505**
Trooper UBS	Diesel	87-90	**VKC 3630**

ISUZU

ELF

ELF P-NHR55,P-NKR57,58	1.0-1.25t,2.0 - 2.75t	85-86	**VKC 3558**
ELF P-NHR54,P-NKR57	1.0, 1.25t;2.0t	84 |->	**VKC 3558**
ELF NHS	1.5t	91 |->	**VKC 3606**
ELF P-NPR57,P-NPR59	2.0 - 3.5t	84-86	**VKC 3574**
ELF P-TLD26,56,66	2.0t	83 |->	**VKC 3511**
ELF NPR57GVN	2.0t	88-90	**VKC 3558**
ELF NPR57GVN	2.0t	88-90	**VKC 3558**
ELF TLD	Diesel	79-84	**VKC 3511**
ELF NPR58	MSA5P, MSA5G TYPE - Diesel	88 |->	**VKC 3574**
ELF 150 KAD, KAG	1600 cc, 2000 cc	72-84	**VKC 3505**
ELF 150 KAD	2400 cc	78-84	**VKC 3511**
ELF 150 NHR	2500 cc	84 |->	**VKC 3558**
ELF 150 NHR54	Diesel	88-89	**VKC 3558**
ELF 250 TLG,TLD	2000 cc, 2400 cc, 2800 cc	70-78	**VKC 3513**
ELF 250 TLD,KT	2400 cc, 2800 cc, 3300 cc	78-84	**VKC 3511**

ELF 250 NKR	2800 cc, 3300 cc	84 |->	**VKC 3558**
ELF 250 NKR55, NKR57	Diesel	85 |->	**VKC 3558**
ELF 350 KS11,21,31,41	3600 cc	73-79	**VKC 3513**
ELF 350 KS12,22,32,42	3900 cc Diesel	79-84	**VKC 3537**
ELF 350 NPR57, NPR59	Diesel	85-86	**VKC 3558**
ELF 350 (Manual Transmission) NPR57,59	MSA5P, MSA5S TYPE - Diesel	87-89	**VKC 3631**
ELF 350 (Manual Transmission) NPR57,59	MSB5M TYPE - Diesel	87 |->	**VKC 3558**
ELF 350 (MSA Transmission) NPR	3300 cc, 3900 cc	86 |->	**VKC 3574**
ELF 350 (MSB Transmission) NPR	3600 cc, 3900 cc	86 |->	**VKC 3558**
Fargo			
Fargo L-WFR10,11,51	1600 cc, 1800 cc & Diesel	82-85	**VKC 3505**
Fargo WFR SERIES	1800 cc, 2000 cc & Diesel	86-88	**VKC 3505**
Fargo WFR SERIES	1800 cc, 2000 cc & Diesel	89-90	**VKC 3554**
Fargo N-WFS51, N-WFS53, N-WFR53	2000 cc	83-86	**VKC 3505**
Fargo WFR12DV,12FV,12FVH	2000 cc	85-88	**VKC 3505**
Fargo WFR, NFR,WFS, NFS62	2400 cc	89 |->	**VKC 3606**
Faster			
Faster TFR, TFS SERIES	1600 cc & Diesel	88-90	**VKC 3505**
Faster KB SERIES	1600 cc, 1800 cc & Diesel	76-80	**VKC 3505**
Faster KBG, KBD SERIES	1600 cc, 1800 cc, 2000 cc & Diesel	81-86	**VKC 3505**
Faster N-KBD22,42	1.0t	85-86	**VKC 3505**
Faster KB SERIES	2300 cc Sporty Package,1600 cc, 2000 cc & Diesel	87 |->	**VKC 3505**
Faster KB SERIES	2300 cc & Diesel	87 |->	**VKC 3554**
Faster TFR, TFS SERIES	2300 cc & Diesel	88-90	**VKC 3554**
Faster TFS55	2700 cc, 2800 cc	90 |->	**VKC 3606**
Light Bus/Trucks			
Big Horn N-UBS52	2000 cc	85-86	**VKC 3505**
Big Horn UBS55	2800 cc, 3100 cc, 3200 cc	89 |->	**VKC 3606**
Big Horn UBS69,UBS25	2800 cc, 3100 cc, 3200 cc	92 |->	**VKC 3606**
Chevrolet Luv	2300 cc & Diesel	87-90	**VKC 3554**
KB/LUV Pick ups (Chevrolet LUV) KB, KBG, KBD	1600 cc, 1800 cc, 2000 cc, 2200 cc	72 |->	**VKC 3505**
Light Bus BLG22-24,BLD23-24,30N	2000 cc, 2400 cc, 2800 cc	70-78	**VKC 3513**
Light Bus BLD23-24,BL34,BLD35-36,BL35	2000 cc, 2400 cc, 2800 cc, 3300 cc	78 |->	**VKC 3511**
Light Bus BL36-46	3300 cc	83 |->	**VKC 3558**
Light Bus BE20	3600 cc	72-79	**VKC 3513**
Light Bus BE22	3900 cc	81 |->	**VKC 3537**
Microbus WFR	1800 cc, 2000 cc	81-90	**VKC 3505**
MU UCS	2500 cc	89 |->	**VKC 3606**
Rodeo/Faster			
Rodeo TFS52	2200 cc	89 |->	**VKC 3606**
Rodeo/Faster S-TFS52, U-TFS52	2200 cc, 2200 cc 4WD Diesel	88 |->	**VKC 3554**
Rodeo/Faster TFS55, TFR55	2700 cc, 2800 cc	90 |->	**VKC 3606**
WFR			
Van/Truck WFR10,11,50,51V,51W,121,122, WFR53	1600 cc, 1800 cc, 2000 cc, 2200 cc	80-86	**VKC 3505**
WFR/WFS series - Van/Truck	2000 cc, 2200 cc	83 |->	**VKC 3554**

IVECO

Daily

Daily 30-8			
30-8	GBX: Z.F	81-09/84	**VKC 2170**

www.bergab.ru Берг АБ bergab@ya.ru Тел. (495)-228-06-21, факс (495) 223-3071

IVECO .../...

Daily "35" Series

A35-8	GBX: Z.F	81-09/84	**VKC 2170**
35-8	GBX: Z.F	81-09/84	**VKC 2170**

Daily "40" Series

40-8	GBX: Z.F	81-09/84	**VKC 2170**
40-8H	GBX: Z.F		**VKC 2170**

KIA

Avella

Avella B3	1300 cc	03/94 |->	**VKC 3609**

Concord

Concord F8	1800 cc, 2000 cc	02/92 |->	**VKC 3600**

Capital

Capital B5	1500 cc, 1800 cc	05/90 |->	**VKC 3600**

Facelift

Facelift F8		02/92 |->	**VKC 3600**

Potentia

Potentia	2000 cc, 2200 cc, 3000 cc	93-94	**VKC 3600**

Siemens

Siemens F8		02/92 |->	**VKC 3600**

Sportage

Sportage	2000 cc, 2200 cc	05/93-94	**VKC 3600**

LADA

VAZ

VAZ 1200,1300,1500,1600			**VKC 2248**

Samara

Samara	TT	h=17	**VKC 2247**
	TT	h=13	**VKC 2535**
	TT	h=20	**VKC 2536**

Sagona

Sagona	TT	h=17	**VKC 2247**
	TT	h=13	**VKC 2535**
	TT	h=20	**VKC 2536**

Niva

Niva 1.6	TT	h=17	**VKC 2247**
	TT	h=13	**VKC 2535**
	TT	h=20	**VKC 2536**

LANCIA

A112 900,965,1050		82-86	**VKC 2095**

Y10

Y10 1.0		85-92	**VKC 2095**
Y10 1.05 Touring		85-88	**VKC 2095**
Y10 1.05 Turbo		85-88	**VKC 2095**

www.bergab.ru Берг АБ bergab@ya.ru Тел. (495)-228-06-21, факс (495) 223-3071

www.bergab.ru Берг АБ bergab@ya.ru Тел. (495)-228-06-21, факс (495) 223-3071

Y10 1.1		89-94	.c)	VKC 2095
		92-94	.c)	VKC 2183
Y10 1.3		89-94		VKC 2095
Epsilon				
Epsilon 1.2 (840AA)	840A3.000 - 1242 cc	95-96		VKC 2183
Epsilon 1.4 (840AB,AC)	840A2.000, 840A2.000 - 1370 cc	95-96		VKC 2183
Dedra				
Dedra 1.6		89 |->		VKC 2168
Dedra 1.8 except 16V		89 |->		VKC 2501
Dedra 1.8 16V		94 |->	.h=40	VKC 2501
		94 |->	.h=26	VKC 2168
Dedra 2.0		89-94		VKC 2501
Dedra 2.0 Turbo		90-94		VKC 2168
Dedra 2.0 16V except 4X4	836A3.000 - 1995 cc	94 |->	.h=40	VKC 2501
Dedra 2.0 16V 4X4	836A3.000 - 1995 cc	94 |->	.h=26	VKC 2168
Dedra 1.9 Turbo Diesel		89 |->		VKC 2501
Delta				
Delta 1.1		86-92		VKC 2168
Delta 1.3		79-92		VKC 2168
Delta 1.4 (836AF,AH)	1372 cc	93 |->		VKC 2168
Delta 1.5		79-92		VKC 2168
Delta 1.6		83 |->	.h=26	VKC 2168
		83 |->	.h=47	VKC 2500
		83 |->	.h=40	VKC 2501
Delta 1.6 Turbo	831B7.046 - 1585 cc / MPI Injec	86 |->	.h=47	VKC 2500
		86 |->	.h=40	VKC 2501
Delta 1.8	1750 cc	93 |->		VKC 2501
Delta 1.8 16V (836AQ,AR)	1750 cc	93 |->		VKC 2501
Delta 2.0 8V Turbo (831AB019, 024)	831B5.000, C5.000 - 1995 cc	87-91	.h=26	VKC 2168
Delta 2.0i.e 16V (836AA,CA)	836A3.000 - 1995 cc	93 |->		VKC 2501
Delta 1.9 Turbo Diesel	831D1.000 - 1930 cc	86-90	.h=26	VKC 2168
		86 |->	.h=40	VKC 2501
Kappa				
Kappa 2.0 (838AA1AA)		94 |->		VKC 2168
Kappa 2.4 (838AC1AA)		94 |->		VKC 2168
Prisma				
Prisma 1.3		83-91		VKC 2168
Prisma 1.5		83-91		VKC 2168
Prisma 1.6		87-91	.h=40	VKC 2501
		87-91	.h=47	VKC 2500
Prisma 2.0 4X4		86-91		VKC 2500
Prisma 1.9 Diesel		85-91		VKC 2168
Prisma 1.9 Turbo Diesel		05/85-04/87		VKC 2168
		05/87-91		VKC 2501
Thema				
Thema 2.0		84 |->		VKC 2168
Thema 2.0 16V		88 |->		VKC 2168
Thema 2.0 16V Turbo		88 |->		VKC 2168
Thema 2.8 6V		84-88		VKC 2168
Thema 2.5 Turbo Diesel		84 |->		VKC 2168

www.bergab.ru Берг АБ bergab@ya.ru Тел. (495)-228-06-21, факс (495) 223-3071

LANCIA .../...

Zeta

Zeta 2.0 I.E Turbo (220AD5)		94 |->	**VKC 2537**

MAZDA

121/Cosmo

121 DA13, BF10	1100 cc, 1300 cc	86-88	**VKC 3609**
121 DB, DC series	1300 cc	11/93-95	**VKC 3609**
121, 121L/Cosmo CD2VC	1800 cc	75-77	**VKC 3511**
121, 121L/Cosmo CD2VC	1800 cc	77-79	**VKC 3507**
121, 121L/Cosmo HBPH8	1800 cc	81-83	**VKC 3507**
121, 121L/Cosmo CD3MC	2000 cc	77-79	**VKC 3511**
121, 121L/Cosmo CD3MC	2000 cc	79-81	**VKC 3507**
121, 121L/Cosmo HBPHE,HBSHE,HBEP,EBES	2000 cc	81 |->	**VKC 3507**

323

323 PC, TC, UC	1000 cc, 1300 cc, 1400 cc	77-80	**VKC 3569**
323	1100 cc, 1300 cc, 1500 cc	80-87	**VKC 3568**
323 E1, E3, E5 B3, B5	1100 cc, 1300 cc, 1500 cc	80-89	**VKC 3607**
323 BG	1300 cc, 1600 cc, 1700 cc, 1800 cc	89 |->	**VKC 3602**
323 B3, B6, BP	1300 cc, 1600 cc, 1800 cc & 1800 cc DOHC,Diesel	89 |->	**VKC 3602**
323 BW	1500 cc, 1600 cc, 1700 cc - 2WD Gasoline, Diesel	89 |->	**VKC 3602**
323 B6	1600 cc	85-89	**VKC 3568**
323 B6	1600 cc DOHC Turbo 2WD For ECE	87-89	**VKC 3600**
323 BW	1600 cc, Diesel	85-89	**VKC 3607**
323 BW, BF	1600 cc, Gasoline 1600 cc Except Turbo	87-88	**VKC 3607**
323 BP, BG	1800 cc, 1800 cc DOHC Turbo 4WD	89 |->	**VKC 3600**
323 BG	2WD Diesel 1300 cc, 1600 cc, 1700 cc, 1800 cc	89 |->	**VKC 3602**
323 BW	2WD Gasoline 1500 cc, 1600 cc, 1700 cc	89 |->	**VKC 3602**
323 BG	2WD Gasoline 1300 cc, 1600 cc, 1700 cc, 1800 cc	89 |->	**VKC 3602**
323 BF, BW CH.500034 |->	Diesel 1300 cc, 1500 cc, 1600 cc, 1800 cc,	87 |->	**VKC 3607**
323 BG	DOHC Gasoline 1300 cc, 1600 cc, 1700 cc, 1800 cc	89 |->	**VKC 3507**
323 BF	Gasoline 1300 cc, 1500 cc, 1600 cc, 1800 cc	87 |->	**VKC 3607**
323 (GLC) Turbo/Familia BFMR (DOHC)	1600 cc 4WD	85 |->	**VKC 3600**
323 (GLC)/Familia FA3PS,4PS,5PS,4TS,4TV,5TV,6TM,6TS	1000 cc, 1300 cc, 1400 cc	73-80	**VKC 3568**
323 (GLC)/Familia BF5R, BFSR	1500 cc 4WD	85 |->	**VKC 3600**
323 (GLC)/Familia BF5P	1500 cc EGI engine	84-89	**VKC 3568**
323 (GLC)/Familia BD1051,BF5P,BFSP;BD1011,1031:BF3P, 3V;BFTP(OHC)	1500 cc, 1100 cc, 1300 cc	80 |->	**VKC 3568**
323 (GLC)/Familia BFMP (DOHC)	1600 cc	86-89	**VKC 3600**
323 (GLC)/Familia BFMP (OHC)	1600 cc	86-89	**VKC 3568**
323 (GLC)/Familia BFMR (OHC)	1600 cc 4WD	87-89	**VKC 3600**
323 (GLC)/Familia E-BFMR, BFMRF	1600 cc 4WD Gasoline	85-86	**VKC 3507**
323 (GLC)/Familia BF7P, BF7V	1700 cc	85 |->	**VKC 3568**
323 (GLC)/Familia Station Wagon BF5W	1500 cc EGI	85 |->	**VKC 3568**
323 (GLC)/Familia Turbo BFMP (DOHC)	1600 cc	85 |->	**VKC 3600**

www.bergab.ru Берг АБ bergab@ya.ru Тел. (495)-228-06-21, факс (495) 223-3071

616, 626/Capella			
616, 626/Capella SN, SU2A, SNA, BSNA	1500 cc, 1600 cc	70-77	**VKC 3511**
616, 626/Capella CB2NS, CB2NA	1600 cc	78-82	**VKC 3572**
616, 626/Capella GC6P	1600 cc FWD	82-83	**VKC 3507**
616, 626/Capella GC6P	1600 cc FWD	83 |->	**VKC 3600**
616, 626/Capella SV2A, CB1VS	1800 cc	74-78	**VKC 3511**
616, 626/Capella CB2VS, CB2VH	1800 cc	78-82	**VKC 3572**
616, 626/Capella GC8P(EFI)	1800 cc FWD	85-86	**VKC 3600**
616, 626/Capella GC8P	1800 cc FWD /GBX:4	82 |->	**VKC 3600**
616, 626/Capella GC8P	1800 cc FWD /GBX:5	82-92	**VKC 3507**
616, 626/Capella CB2MS, CB2MH	2000 cc	79-82	**VKC 3507**
616, 626/Capella GCEP	2000 cc FWD	82-83	**VKC 3507**
616, 626/Capella GCEP	2000 cc FWD Turbo	83-85	**VKC 3600**
626 F6, F8, FE	1600 cc, 1800 cc, 2000 cc	83-84	**VKC 3507**
626 F6, F8, FE	1600 cc, 1800 cc, 2000 cc	85-86	**VKC 3600**
626 GD, GD1	1600 cc, 1800 cc, 2000 cc, 2200 cc	87-07/91	**VKC 3507**
626 F6, F8, FE	1600 cc, 1800 cc, 2000 cc, 2200 cc & Diesel	87 |->	**VKC 3507**
626 F6, F8, FE, F2, RF	1600 cc, 1800 cc, 2000 cc, 2200 cc & Diesel	87 |->	**VKC 3507**
626 RF	Diesel	84 |->	**VKC 3507**
626 RF	Diesel	84-87	**VKC 3600**
626/Capella GD1	1600 cc, 1800 cc, 2000 cc, 2200 cc	87-89	**VKC 3507**
808,818/Grand Familia			
808,818/Grand Familia STC, STCV	1300 cc	71-78	**VKC 3506**
808,818/Grand Familia SN3, SN4	1600 cc	73-78	**VKC 3511**
929			
929 MA	2000 cc	82-83	**VKC 3507**
929 FE	2000 cc	84-87	**VKC 3507**
929 FE, F2	2000 cc, 2200 cc	87 |->	**VKC 3600**
929L MA	2000 cc	78-81	**VKC 3507**
929, 929L/Luce SVA,SVAV:LA2VS,3VS	1500 cc, 1800 cc	66-81	**VKC 3511**
929, 929L/Luce 2VV	1800 cc	73-77	**VKC 3507**
929, 929L/Luce 2VV	1800 cc	78-81	**VKC 3511**
929,929L/Luce LA4VS,VV:LA4MS,MV	1800 cc, 2000 cc	73-77	**VKC 3511**
929, 929L/Luce LA4VS,VV:LA4MS,MV,LA7MV,HBPH8,HBPHE	1800 cc, 2000 cc	77-83	**VKC 3507**
929, 929L/Luce HBEP, HBES	2000 cc	83-86	**VKC 3507**
929, 929L/Luce HCEP	2000 cc	86 |->	**VKC 3600**
929, 929L/Luce LA4SS	2200 cc	80-81	**VKC 3507**
929, 929L/Luce HBPS2	2200 cc	81 |->	**VKC 3507**
Capella			
Capella GD6P	1600 cc	87-89	**VKC 3507**
Capella E-GV6V, E-GD8S, E-GD8P, GD8PF, E-GDES	1600 cc, 1800 cc, 2000 cc	87-88	**VKC 3507**
Capella GD8A, GD8B	1800 cc	88-89	**VKC 3507**
Capella GDEA, GDEB	2000 cc	88-89	**VKC 3507**
Capella Telstar E-GDEP,GDEPF	2000 cc	87-88	**VKC 3507**
Cosmo			
Cosmo E-HBES, E-HBEP	2000 cc	83-86	**VKC 3507**
Cosmo N-HBPS2	2200 cc	83-84	**VKC 3507**
D1500			
D1500/Craft DUC9	1500 cc	66-77	**VKC 3513**

www.bergab.ru Берг АБ bergab@ya.ru Тел. (495)-228-06-21, факс (495) 223-3071

MAZDA .../...

Etude

Etude BFSP	1500 cc	87-89	**VKC 3607**
Eunos Roadster NA6CE	1600 cc	89-90	**VKC 3619**
F1000 FPAV, FPAH	1000 cc	68-77	**VKC 3506**

Familia

Familia BG5P, BG5S; BG3P, BG3S	1300 cc, 1500 cc	89-91	**VKC 3602**
Familia E-BD1031, E-BD1051	1300 cc, 1500 cc	83-84	**VKC 3568**
Familia BFTP,BFSP	1300 cc, 1500 cc	87-89	**VKC 3607**
Familia E-BFMR, E-BFMRF	1600 cc	85-86	**VKC 3507**
Familia E-BFMR,BFMRF	1600 cc 4WD Gasoline	87-88	**VKC 3507**
Familia BG6R, BG6Z; BG8R,BG8Z	1600 cc, 1800 cc	89-91	**VKC 3600**
Familia BW7W	1700 cc	89-90	**VKC 3602**

Festiva/Laser/Luce/MX5

Festiva E-DA1PF, E-DA3PF, E-DAJPF	1100 cc, 1300 cc	85-89	**VKC 3602**
Laser BG3PF	1300 cc	89-90	**VKC 3602**
Laser BFSPF,BFTPF	1300 cc, 1500 cc	87-89	**VKC 3607**
Laser E-BE5PF	1500 cc	83-84	**VKC 3568**
Laser E-BFMR, E-BFMRF	1600 cc	85-86	**VKC 3507**
Laser BG8RF	1800 cc	89-90	**VKC 3600**
Luce E-HBES, E-HBEP, L-LA4MV; N-HBPS2	2000 cc	83-84	**VKC 3507**
Luce E-HCEP	2000 cc	86 |->	**VKC 3600**
MX5 NA	1600 cc	89 |->	**VKC 3619**

Parkway

Parkway/26 AEVB43:EVB43:TA3H4F	2000 cc, 2700 cc, 3000 cc	71-10	**VKC 3513**
Parkway/26 TA3H4F	3000 cc	79-81	**VKC 3511**
Parkway/26 WVLSF,WVF4B	3000 cc	81-84	**VKC 3507**
Parkway/26 WVL4B	3500 cc	84 |->	**VKC 3600**

RX / Savanna

RX 2, RX 3, RX 4, RX 5/Savanna/Cosmo S102A	1150 cc, 1300 cc	70-81	**VKC 3511**
RX 4, RX 7 LA42S, LA52S, SA22C	1150 cc	77-83	**VKC 3507**
RX 5/Cosmo HBSN2	1150 cc	81-86	**VKC 3507**
RX 5/Cosmo CD23C, CD73C, CD83C	1300 cc	75-78	**VKC 3511**
RX 5/Cosmo CD23C, CD73C, CD83C	1300 cc	78-81	**VKC 3507**
RX 7/Savanna FD01, 02, 03, 04, 05	1300 cc	93 |->	**VKC 3659**
RX 7/Savanna SA22C	1150 cc	83 |->	**VKC 3507**
RX 7/Savanna FC3S	1300 cc	85 |->	**VKC 3600**
RX 7/Savanna FC3C, FC3S	654 cc X 2	87-89	**VKC 3600**
RX 7/Savanna FC42, FC56	654 cc X 2	89-90	**VKC 3600**
Savanna E-SA22C	573 cc X 2	83-84	**VKC 3507**
Savanna E-FC3S	654 cc X 2	86 |->	**VKC 3507**

MAZDA

B Series Pick Up/Proceed/Courier

B Series Pick Up/Proceed/Courier BNA61, BTA67	1300 cc, 1600 cc	71-77	**VKC 3511**
B Series Pick Up/Proceed/Courier PE2N, PE2V,PE2M	1600 cc, 1800 cc, 2000 cc	77-81	**VKC 3507**
B Series Pick Up/Proceed/Courier JM2UC, UD	2000 cc, 2200 cc	81 |->	**VKC 3507**
B1600 UDX061, UDY061	1600 cc	82 |->	**VKC 3507**
B1600, B1800 NA, NC	1600 cc, 1800 cc	77 |->	**VKC 3511**
B1600, B1800 NA, NC	1600 cc, 1800 cc	78-81	**VKC 3507**
B1600, B1800, B2000, B2200 NA, VC, MA, S2	1600 cc, 1800 cc, 2000 cc, 2200 cc & Diesel	82 |->	**VKC 3507**

www.bergab.ru Берг АБ bergab@ya.ru Тел. (495)-228-06-21, факс (495) 223-3071

B1600, B1800, B2000 UDX, UDY, UDY0E1, UD1Y, UD1L, UDX, UDY	1800 cc, 2000 cc, Diesel	82 |->	**VKC 3507**
B1600, B2000 UF	1600 cc, 2000 cc (Except EGI)	11/89-2/9	**VKC 3507**
B2600 AM	2600 cc	85 |->	**VKC 3600**
Bongo			
Bongo L-SS48V	1400 cc	85-86	**VKC 3570**
Bongo SE58T, SS58V	1500 cc	90-90	**VKC 3570**
Bongo E-SS88W	1800 cc	85-86	**VKC 3507**
BongoE-SS88R	1800 cc	86 |->	**VKC 3507**
Bongo N-SRF9W	2000 cc	83-84	**VKC 3507**
Bongo SSE8R, SSF8R	2000 cc	86-90	**VKC 3507**
Bongo E-SRE9W,M-SREAV,N-SR29V,N-SR2AV	2000 cc, 2200 cc	83-84	**VKC 3507**
Bongo SD29M	2200 cc	87-88	**VKC 3507**
Bongo SE28M	2200 cc	87-91	**VKC 3507**
Bongo Brawny E-SRE9W	2000 cc	85-86	**VKC 3600**
E Series/Boxer/Bongo/Titan			
E Series/Boxer/Bongo/Titan BA2T8,BA2U8,BA3U8,SE48T,SS48V	1300 cc, 1400 cc	77-83	**VKC 3570**
E Series/Boxer/Bongo/Titan L-SS48V	1400 cc	85-86	**VKC 3570**
E Series/Boxer/Bongo/Titan BA2N9,V:BA2N8:BA2V8H,9H	1600 cc, 1800 cc	77-83	**VKC 3572**
E Series/Boxer/Bongo/Titan E-SS88R	1800 cc 4WD Gasoline	86 |->	**VKC 3507**
E Series/Boxer/Bongo/Titan SD89T	1800 cc (Single wheel)	83-88	**VKC 3507**
E Series/Boxer/Bongo/Titan SD89T	1800 cc (Twin wheel)	83-88	**VKC 3572**
E Series/Boxer/Bongo/Titan SS88W, SR89V	1800 cc, 2000 cc, 2200 cc (Single wheel)	83 |->	**VKC 3507**
E Series/Boxer/Bongo/Titan EVB12,13,43	2000 cc	71-79	**VKC 3513**
E Series/Boxer/Bongo/Titan BA2S8, BA2S9	2000 cc	79-83	**VKC 3507**
E Series/Boxer/Bongo/Titan SRE9W,SREAM,SEF8T,SSF8V, SRF9W	2000 cc	83 |->	**VKC 3507**
E Series/Boxer/Bongo/Titan E-SRE9W	2000 cc	85-86	**VKC 3600**
E Series/Boxer/Bongo/Titan SSE8W	2000 cc	86 |->	**VKC 3600**
E Series/Boxer/Bongo/Titan N-SSE8R;Q-SS28M/R,N-SSF8T/V/W, E-SE/SS88	2000 cc, 1800 cc 4WD Gasoline	87-88	**VKC 3507**
E Series/Boxer/Bongo/Titan SREAV,SDEAT	2000 cc (Single wheel)	83 |->	**VKC 3507**
E Series/Boxer/Bongo/Titan SR2AV,29V:SD2AT,29T	2200 cc	83 |->	**VKC 3507**
E Series/Boxer/Bongo/Titan N-WE5AT;N-WEF4C,WEF4T,	2500 cc, 3000 cc	85-88	**VKC 3600**
E Series/Boxer/Bongo/Titan EXC12,13,43:TA3H1,H4	2700 cc, 3000 cc	71-78	**VKC 3513**
E Series/Boxer/Bongo/Titan TA3H1,H4	3000 cc	78-80	**VKC 3511**
E Series/Boxer/Bongo/Titan P-WEL4C,WEL4T,WEL7T,WELAE, WELAT	3500 cc Except Turbo	87-88	**VKC 3600**
E Series/Boxer/Bongo/Titan EZA14,45,75	4100 cc	72-76	**VKC 3540**
E1300 TC	1300 cc	78-83	**VKC 3570**
E1400 UC	1400 cc	84-88	**VKC 3570**
E1800 F8	1800 cc	88 |->	**VKC 3600**
E1800 F8	1800 cc Van & Wagon	84-88	**VKC 3507**
E2000 VA	2000 cc	71-77	**VKC 3513**
E2000 VA	2000 cc	77-80	**VKC 3511**
E2000 FE	2000 cc /GBX:4	88 |->	**VKC 3600**
E2000 FE	2000 cc /GBX:5	88 |->	**VKC 3507**
E2000, E2200 FE, R2	2000 cc & Diesel	84-88	**VKC 3507**
E2200 SE28M	2200 cc	87-91	**VKC 3507**
E2200 S2	Diesel	78-83	**VKC 3507**
E2200 R2	Diesel	88 |->	**VKC 3507**
E2700, E3000 XB, HA	Diesel	77 |->	**VKC 3513**
E2700, E3000 XB, HA	Diesel	78-80	**VKC 3511**

www.bergab.ru Берг АБ bergab@ya.ru Тел. (495)-228-06-21, факс (495) 223-3071

www.bergab.ru Берг АБ bergab@ya.ru Тел. (495)-228-06-21, факс (495) 223-3071

MAZDA .../...

Persona/Pickup/Porter Cab/Presto

Persona E-MA8P, E-MAEP	1800 cc, 2000 cc	88-90	**VKC 3507**
Pickup/ Familia Truck BPB55:BPC55:BTA55,65:FA2T55,65	1000 cc, 1200 cc, 1300 cc	68-79	**VKC 3506**
Porter Cab M-PC56	550 cc	84 |->	**VKC 3591**
Presto FA3	1000 cc, 1300 cc	73-76	**VKC 3506**

T Series

T Series WEW051,WEWOF1 & 2:D:WEXOF1 & 2:WEYOF1 & 2	2500 cc, 3000 cc	80-83	**VKC 3507**
T Series WE5AT,WEFAT:WEF4C/4T:WELAT:WELAE:WEL4T, 4H	2500 cc, 3000 cc, 3500 cc	83 |->	**VKC 3600**
T Series WEX011:WEY011:WEZ011:WE14T,14L17T	4100 cc	80 |->	**VKC 3540**
T2000 VA	2000 cc	81-84	**VKC 3507**
T2000 WEEAT, WEE4T	2000 cc	84 |->	**VKC 3507**
T2500, T3000, T3500 XA, HA, SL	Diesel	84 |->	**VKC 3600**
T2600 AM	2600 cc	85 |->	**VKC 3600**
T3000 HA	Diesel	81-84	**VKC 3507**
T3500 SL	Diesel Turbo	84 |->	**VKC 3540**
T4100 ZB	Diesel	81-84	**VKC 3540**
T4100 ZB	Diesel	84 |->	**VKC 3540**
Titan N-WE5AT	1.5t	83-84	**VKC 3600**
Titan N-WEF4T,AT,AF,AY,AD	2.0 - 3.0t	83-84	**VKC 3600**
Titan P-WEL4C,4T,AF,AD,AT	2.0 - 3.0t	84 |->	**VKC 3600**
Titan N-WEFAT,N-WE5AT	2.0t,1.5t	85-86	**VKC 3600**
Titan WGFAD;WGLAD,WGL4H;WG5AT	3000 cc, 3500 cc, 2500 cc	89-90	**VKC 3600**
Titan N-WE17T, N-WE11D	3.5 - 4.0t	83-84	**VKC 3540**
Titan P-WEL7T	4.0t	86 |->	**VKC 3540**

MERCEDES – BENZ

Class "C" (W202)

C180 1.8 (W202.018)	c)	**VKC 2045**
	c)	**VKC 2519**
C200 2.0 (W202.020)	c)	**VKC 2519**
C220 2.2 (W202.022)		**VKC 2519**
C200 2.0 Diesel (W202.120)	c)	**VKC 2045**
	c)	**VKC 2519**
C220 2.2 Diesel (W202.121)	c)	**VKC 2045**
	c)	**VKC 2519**
C250 2.5 Diesel (W202.125)	c)	**VKC 2519**
C280 2.8 (W202.028)		**VKC 2519**

Class "E" (.124)

200 1.9 (W124.019)	07/93 |->		**VKC 2202**
200 E,CE 2.0 (C124.040,041,060)	09/89 |->		**VKC 2202**
200 2.0 (W124.020,021 / T124.080,081)	->| 07/93		**VKC 2202**
200 E,TE 2.0 (T124.079)	07/93 |->	c)	**VKC 2202**
200 2.0 Diesel (W124.120)			**VKC 2202**
200 2.0 Turbo Diesel (T124.180)	->| 07/93		**VKC 2202**
220 2.2 (W124.022 / C124.042,062 / T124.082)	09/89 |->		**VKC 2519**
230 E 2.3 (W124.023 / C124.043)	->| 09/89		**VKC 2202**
	09/89 |->		**VKC 2519**
230 TE (T124.083)	->| 07/93		**VKC 2202**
250 2.5 Diesel (W124)	->| 09/89	c)	**VKC 2202**
	09/89 |->	c)	**VKC 2519**
250 2.5 Turbo Diesel (W124 / T124)	->| 09/89	c)	**VKC 2202**
	09/89 |->	c)	**VKC 2519**

www.bergab.ru Берг АБ bergab@ya.ru Тел. (495)-228-06-21, факс (495) 223-3071

www.bergab.ru Берг АБ bergab@ya.ru Тел. (495)-228-06-21, факс (495) 223-3071

260 E 2.6 (W124)	->| 09/89	.c)	VKC 2202
	09/89 |->	.c)	VKC 2519
280 2.8 (W124 / T124)	07/93 |->		VKC 2519
300 3.0 (C124 / W124 / T124)	->| 09/89	.c)	VKC 2202
	09/89 |->	.c)	VKC 2519
300 3.0 Diesel (W124 / T124)	->| 09/89	.c)	VKC 2202
	09/89 |->	.c)	VKC 2519
300 3.0 Turbo Diesel (T124)	->| 09/89	.c)	VKC 2202
	09/89 |->	.c)	VKC 2519
320 3.2 (W124 / T124)	07/93 |->		VKC 2519
Class "S" (W140)			
S 280 (W140.028)			VKC 2519
300 (W140)			VKC 2519
S 320 (W140)			VKC 2519
Class "SL" (R129)			
SL 280 (R129.058)			VKC 2519
300 SL (R129)			VKC 2519
190 (W201)			
190 E 1.8 (W201.018)	9/88 |->		VKC 2202
190 2.0 (W201.022,023,024)	82 |->		VKC 2202
190 E 2.3 (W201)		c)	VKC 2202
		.c)	VKC 2519
190 E 2.6 (W201)		c)	VKC 2202
		.c)	VKC 2519
190 2.0 Diesel (W201)	82 |->		VKC 2202
190 2.5 Diesel (W201)		c)	VKC 2202
		.c)	VKC 2519
190 2.5 Turbo Diesel (W201)	->| 09/88		VKC 2202
	09/88 |->		VKC 2519
200 (.115 / .123)			
200 2.0 (W123.220 / T123.280)	80-85		VKC 2202
230 (W114 / W115 / .123)			
230 CE 2.3 (C123.243)	80-85		VKC 2202
230 E,TE 2.3 (T123.223,.283)	80-85		VKC 2202
240 (W115 / .123)			
240 (W115 / .123)	76-85	.c)	VKC 2202
260 (W126)			
260 SE 2.6 (W126.020)	09/85 |->		VKC 2202
280 (.107 / .108 / .114 / .116 / .123 / .126)			
300 - 500 (R107 / C107 / .123 / W126)			
300 SE,SEL (W126)	09/85 |->		VKC 2202

MERCEDES – BENZ OFF ROAD

200-230 (460)		c)	VKC 2045
200-230 (463)		c)	VKC 2519
240 GD (460)	->| 12/90		VKC 2045
250 GD (460)		c)	VKC 2202
250 GD (463)		c)	VKC 2519
280 GE (460)			VKC 2202

www.bergab.ru Берг АБ bergab@ya.ru Тел. (495)-228-06-21, факс (495) 223-3071

MERCEDES – BENZ OFF ROAD … /…

300 GE (463)	GBX: 717		VKC 2519
300 GD (460,463)			VKC 2045

MERCEDES – BENZ

206 - 310

206 - 310		c)	VKC 2045

MITSUBISHI

Chariot/Space Wagon

Chariot E-D09W, E-D05W, E-D08W	1800 cc, 2000 cc	83-90	VKC 3515
Space Wagon/Chariot D02/03/14/05/08/09W	1600 cc, 1800 cc, 2000 cc 4WD	83-90	VKC 3515
Space Wagon N31W, N33W	1800 cc, 2000 cc	91-94	VKC 3515

Colt

Colt C11A,12A,13A,14A,15A	1200 cc, 1300 cc, 1500 cc, 1600 cc Turbo & Diesel	84-89	VKC 3515
Colt A151, A155, A152, A156	1200 cc, 1400 cc	79-83	VKC 3515
Colt C51A,51V,52A,53A,54A,C58A	1300 cc, 1500 cc, 1600 cc, 1800 cc DOHC & Diesel	04/88-08/93	VKC 3515
Colt/Delica T120	1600 cc	73-79	VKC 3543
Colt/Mirage T	1400 cc	71-79	VKC 3543
Colt/Mirage/Mirage II A...C...	1200 cc, 1300 cc, 1400 cc, 1500 cc, 1600 cc, 1800 cc	78-83	VKC 3515
Colt/Lancer C51, 52, 53, 54, /58/61, 62, 63, 64, 65, 66, 67, 68, 69/76/77	1200 cc, 1300 cc, 1400 cc, 1500 cc, 1600 cc, 1800 cc	88-93	VKC 3515

Cordia

Cordia E-A211A, E-A212A, E-A213A	1400 cc, 1600 cc, 1800 cc	83-88	VKC 3515
Cordia A212A	1600 cc	82-87	VKC 3515
Cordia/Tredia A..:NF24S,41	1400 cc, 1600 cc, 1800 cc	81 |->	VKC 3515

Eclipse

Eclipse D32A, D33A	2000 cc	94	VKC 3515
Eclipse D21A, D22A, D27A	1800 cc, 2000 cc 4WD	05/88-05/	VKC 3515

Eterna/Diamante

Diamante F11A, 13A	2000 cc, 2500 cc	90 |->	VKC 3515
Eterna E32A, 35A, E39A	1800 cc, 2000 cc	88-90	VKC 3515
Eterna Sigma E-E12/13/14/15/17A	1800 cc, 2000 cc	83-90	VKC 3515
Eterna Sigma/Lambda E-A162A, E-A164A	1800 cc, 2000 cc	83 |->	VKC 3592

Forte

Forte L-L025P	1600 cc	83-84	VKC 3552
Forte L-L026G	2000 cc	83-84	VKC 3592

Galant

Galant A51..,52..,53..,54..,55,61,62,63,112..	1300 cc, 1400 cc, 1500 cc, 1600 cc	71-76	VKC 3505
Galant A121	1600 cc	76-80	VKC 3505
Galant A161	1600 cc	81-83	VKC 3552
Galant E11A, E12A, E15A, E14A, E31A, E32A, E33A, E34	1600 cc, 1800 cc, 2000 cc & Diesel Turbo	84-90	VKC 3515
Galant A114,115,57C	1600 cc, 1850 cc, 2000 cc	73-77	VKC 3511
Galant E32AR, E32/37/52/54/55/57/64/75/88A	1800 cc, 2000 cc, 2500 cc	88-95	VKC 3515
Galant A123	2000 cc	76-80	VKC 3511
Galant A163	2000 cc	81-83	VKC 3592

Galant E16A	2400 cc	86-88	VKC 3515
Galant E38A, E39A, R39A	2000 cc 4WD	89 |->	VKC 3515
Galant E38A, E39A	2000 cc 4WD	90 |->	VKC 3515
Galant Sigma A121	1600 cc	76-80	VKC 3505
Galant Sigma F16A	3000 cc	90-94	VKC 3515
Galant Sigma E-E11/12/13/14A/14AR, N-E14A	1600 cc, 1800 cc	83-91	VKC 3515
Galant Sigma A123	2000 cc	76-80	VKC 3511
Galant Sigma E-E15A, E-E17A	2000 cc	84-91	VKC 3515
Galant Sigma/Lambda E-A162A, E-A164A,	1800 cc, 2000 cc	83 |->	VKC 3592
Galant Sigma/Lambda/Eterna Sigma/Sapporo E11/12/14/15/17A, E31/32/34A	1600 cc, 1800 cc, 2000 cc - FWD	83-87	VKC 3515
Galant Sigma/Lambda/Eterna Sigma/Sapporo A121/131	1600 cc	76-80	VKC 3505
Galant Sigma/Lambda/Eterna Sigma/Sapporo A161	1600 cc	80-83	VKC 3552
Galant Sigma/Lambda/Eterna Sigma/Sapporo A162	1800 cc Turbo	82-83	VKC 3592
Galant Sigma/Lambda/Eterna Sigma/Sapporo A122/3/132/133	1850 cc, 2000 cc	76-80	VKC 3511
Galant Sigma/Lambda/Eterna Sigma/Sapporo A163/4/7	2000 cc, 2300 cc, 2600 cc	80 |->	VKC 3592
Sapporo A161	1600 cc	81-83	VKC 3552
Sapporo A163, A164, A167A	2000 cc, 2300 cc, 2600 cc	80-83	VKC 3592
GTO/3000 GT			
GTO Z16A, Z15A	Turbo	09/90 |->	VKC 3652
3000 GT	3000 cc	90-95	VKC 3652
Jeep			
Jeep J3,30,32,	2000 cc, 2300 cc, 2400 cc, 2600 cc, 2700 cc	64-70	VKC 3543
Jeep J24,36,44,54	2000 cc, 2300 cc, 2400 cc, 2600 cc, 2700 cc	70-74	VKC 3523
Jeep J20,22,25,26,28,34,42,52,58	2000 cc, 2300 cc, 2400 cc, 2600 cc, 2700 cc	71-77	VKC 3545
Jeep J36,38,54,55	2000 cc, 2300 cc, 2400 cc, 2600 cc, 2700 cc	74-75	VKC 3543
Jeep J24,36,38,44,46,54,55,56	2000 cc, 2300 cc, 2400 cc, 2600 cc, 2700 cc	75-79	VKC 3545
Jeep J26,58	2000 cc, 2300 cc, 2400 cc, 2600 cc, 2700 cc	77-79	VKC 3543
Jeep J24,24H,26,36,38,44,46,54,56,58	2000 cc, 2300 cc, 2400 cc, 2600 cc, 2700 cc	79 |->	VKC 3523
Jeep J27,36R,37,47,54B2,59	2000 cc, 2300 cc, 2400 cc, 2600 cc, 2700 cc	80 |->	VKC 3545
Jeep L-J59, L-J57	2000 cc, 2600 cc	83-84	VKC 3545
Jeep N-J54	2700 cc	83-84	VKC 3545
Lancer			
Lancer C15A, C11A, C12A, C13A, C14A	1200 cc, 1300 cc, 1500 cc, 1600 cc Turbo & Diesel	84-89	VKC 3515
Lancer A75, A72	1200 cc, 1400 cc	74-79	VKC 3505
Lancer E-A171, A172, A174	1200 cc, 1400 cc, 1600 cc	80-83	VKC 3552
Lancer C61/62/63/64/65/66/67/68/76/77A	1200 cc, 1300 cc, 1500 cc, 1600 cc, 1800 cc, 2000 cc	90-93	VKC 3515
Lancer E-A172A,E-A174A,E-A175A,L-A148V,L-A149V	1200 cc, 1400 cc, 1600 cc, 1800 cc	83-84	VKC 3552
Lancer C61A, 62A	1300 cc, 1500 cc	88-90	VKC 3515
Lancer C12V, C14V	1500 cc & Diesel Station Wagon	86 |->	VKC 3515
Lancer C77A	1800 cc 4WD	90 |->	VKC 3515
Lancer C37V	1800 cc 4WD	87-89	VKC 3515
Lancer C64A	DOHC Diesel	90 |->	VKC 3515
Lancer C37V	Station Wagon	90 |->	VKC 3515

MITSUBISHI .../...

Lancer Fiore All Models	1200 cc, 1300 cc, 1400 cc, 1500 cc, 1800 cc	81 |->	**VKC 3515**
Lancer Fiore C11V	1300 cc	85-90	**VKC 3515**
Lancer Fiore C12V, 12W	1500 cc	85-90	**VKC 3515**
Lancer Fiore N-C14A	1800 cc	84 |->	**VKC 3515**
Lancer Fiore C14V, 14W	1800 cc	85-88	**VKC 3515**
Lancer-F A155, A156, A158	1200 cc, 1400 cc	83-84	**VKC 3515**
Lancer-S/Wagon C37V	1800 cc 4WD	87-90	**VKC 3515**
Lancer/Lancer Celeste A171	1200 cc	78-83	**VKC 3552**
Lancer/Lancer Celeste A71,75,141,142,72VE,72VJ,143..	1200 cc, 1400 cc	73-79	**VKC 3505**
Lancer/Lancer Celeste A174A	1400 cc /GBX:4	79-83	**VKC 3505**
Lancer/Lancer Celeste A172A	1400 cc /GBX:4	80 |->	**VKC 3505**
Lancer/Lancer Celeste A172A, A174A	1400 cc /GBX:5	79-83	**VKC 3552**
Lancer/Lancer Celeste A73, A77, A144A	1600 cc	73-79	**VKC 3505**
Lancer/Lancer Celeste A175A	1600 cc	80 |->	**VKC 3552**
Lancer/Lancer Celeste A175A	1600 cc Turbo	81 |->	**VKC 3592**
Lancer/Lancer Celeste A78M	2000 cc	77 |->	**VKC 3511**
Lancer/Lancer Celeste A146A, A176A	2000 cc	79	**VKC 3592**
Minica			
Minica A..	360 cc, 500 cc, 550 cc - RWD	71-83	**VKC 3509**
Minica E-A107A, E-A107V, M-A107V	550 cc	83 |->	**VKC 3509**
Minica E-H11V, E-H11A, E-H12V	550 cc	84-86	**VKC 3562**
Minica H14A/V, H15A/V, H21A/V, H26A/V	550 cc	87-90	**VKC 3562**
Minica H11A,H11V	550 cc FWD	84 |->	**VKC 3562**
Minica M-H14T, M-H15A, M-H15V, H22A/V	550 cc, 550 cc 4WD Gasoline, 660	87-90	**VKC 3562**
Minica Econo	550 cc	87-88	**VKC 3562**
Minica Econo	550 cc, 550 cc 4WD Gasoline	85-86	**VKC 3562**
Minica Van, Cab, Pick Up	360 cc, 500 cc, 550 cc	72-83	**VKC 3509**
Minica Van, Cab, Pick Up	550 cc	83 |->	**VKC 3562**
Mirage			
Mirage C51-3/61-3A,C11/2/14V/W,C34/37W,E-C11/2/4A, CA2/5A, CB2/5A	1300 cc, 1500 cc, 1600 cc, 1800 cc	83-94	**VKC 3515**
Pajero/Montero/Shogun			
Pajero/Montero L146GW	3000 cc	89-90	**VKC 3559**
Pajero E-L041GW, E-L046GW, L-L041GW; N-L043GW	2000 cc, 2300 cc	83-84	**VKC 3592**
Pajero L049GV, L044G	2500 cc	86-91	**VKC 3579**
Pajero L141G, 141GW, 146GW	3000 cc	89-91	**VKC 3559**
Pajero	V6 4X4 leisure	94	**VKC 3505**
Pajero/Montero L146GW	3000 cc	89-90	**VKC 3559**
Pajero/Montero L034G,L043GV/48GV/GW,L042G/GV,L047GV/GW..	Diesel, 2600 cc	82-86	**VKC 3592**
Pajero/Montero L044G/GV,L049GV/GW,L042G/GV,L047GV/GW	Diesel, 2600 cc	87-90	**VKC 3579**
Pajero/Montero/Shogun L041/42GN/GW,L043G/GW,LO47, LO48G	2000 cc, 2300 cc, 2600 cc	82-86	**VKC 3592**
Pajero/Montero/Shogun L041G,L044G,L046G,L049G	2000 cc, 2500 cc	86-90	**VKC 3579**
Pajero V24G, V24W, V44W,	2500 cc	90-94	**VKC 3579**
Pajero V23C, V23W, V43W	3000 cc	90-94	**VKC 3559**
Pajero V21, V41	2400 cc	90-94	**VKC 3592**
Starion			
Starion A	2000 cc	82 |->	**VKC 3592**
Starion A187A	2600 cc	86-90	**VKC 3579**
Starion A183A	2000 cc	82-88	**VKC 3592**

www.bergab.ru Берг АБ bergab@ya.ru Тел. (495)-228-06-21, факс (495) 223-3071

Space Runner

Space Runner N11W, N18W, N21W	1800 cc, 2000 cc	06/91-05/93	**VKC 3515**

Tredia

Tredia E-A211/2A, A211/3/4/5A, A215/7G/A,	1400 cc, 1600 cc, 1800 cc, Turbo, 1500 cc, 2000 c	83-88	**VKC 3515**

MITSUBISHI

Canter

Canter	3300 cc Diesel Truck	10/93 |->	**VKC 3505**
Canter N-FB120BW, N-FB120B, N-FB100B	1.0, 1.5t	83-84	**VKC 3559**
Canter N-FB300	1.5 Ton	85-88	**VKC 3559**
Canter P-FG335,435	2 - 3 Ton - 4WD Diesel	86-88	**VKC 3559**
Canter T91,95,204,214	2000 cc	68-74	**VKC 3513**
Canter T96,98,200,205,206,207,210,215,215ZH,216,217,220	2000 cc, 2300 cc, 2400 cc, 2700 cc	70-80	**VKC 3545**
Canter FC201,211	2400 cc	78 |->	**VKC 3545**
Canter FE100,120,FB100,120	2700 cc	78-82	**VKC 3559**
Canter FB300A, 300B, FE300B, 300BP	2700 cc	85-89	**VKC 3559**
Canter FE100,101,111,114,120,121,124,131,134,214	2700 cc, 3300 cc	82 |->	**VKC 3559**
Canter FE221,223,224,234,FB100,120, FE211	2700 cc, 3300 cc	82-84	**VKC 3559**
Canter P-FG335, P-FG435	2.0 - 3.0t	86 |->	**VKC 3559**
Canter P-FE1/2/3/4 series	2.0 - 3.0t,1.5t	83-88	**VKC 3559**
Canter FE301B, 301BD	3300 cc	85-91	**VKC 3559**
Canter FE434C, 434E	3300 cc	87-89	**VKC 3559**
Canter FE315BD,FB308A,FB308B	3300 cc, 2800 cc	89-91	**VKC 3559**
Canter FE301B,301BD;FE305B,305BD,FE315BD,315BN	3300 cc, 3600 cc	85-91	**VKC 3559**
Canter FE434C,434E;FE437E,437EV,437F,447C,447E,447EV	3300 cc, 4200 cc	87-89	**VKC 3559**
Canter F3325BV, 325E, 325EV, 435C, 435E, 435ED	3600 cc	85-89	**VKC 3559**
Canter FE305B, 305BD, FE315BD, 315BN	3600 cc	85-91	**VKC 3559**
Canter F3325BV,325E,325EV,435C,435E,435ED;FB300A,300B, FE300B, 300BP	3600 cc, 2700 cc	85-89	**VKC 3559**
Canter FE439E,439EV,439F,449C,449E,449F	3900 cc	89-91	**VKC 3587**
Canter P-FE214FZ, P-FE214EZ, P-FE214EZZ, P-FE234EZ	3.0t, 3.5t	83-84	**VKC 3559**
Canter FE437E, 437EV, 437F, 447C, 447E, 447EV	4200 cc	87-91	**VKC 3559**
Canter FE317BD, 317BN	4200 cc	89-91	**VKC 3559**
Canter Cargo FC432,FC312,332,432,FC332,FC312	2600 cc	86-90	**VKC 3559**
Canter Cargo FC312,332,432;FB300,433,436,FE421,431,424,434, 444	2600 cc, Diesel	86-90	**VKC 3559**
Canter Cargo FE211	Diesel	79 |->	**VKC 3523**
Canter Cargo FE211	Diesel	80-84	**VKC 3559**
Canter Cargo FE421,431,424,434,444	Diesel	86-90	**VKC 3559**
Canter Cargo FB300,433,436	Diesel	86-90	**VKC 3559**
Canter Cargo FE301,304,311,314,331,334,421,424,431,434,436 444	Diesel	86-90	**VKC 3559**

Delica

Delica P01V	1400 cc	86-91	**VKC 3552**
Delica L-L036PV, L-L033PV, L-L036P, L-L063PV	1400 cc, 1600 cc	83-84	**VKC 3552**
Delica P12V	1600 cc	86-91	**VKC 3552**
Delica E-L035PW	1800 cc	83-84	**VKC 3592**
Delica P03W	2000 cc	86-91	**VKC 3592**
Delica N-L038GV,38P/GW/PV/PW,68PV/PW/68P, L-L037GV, E-LO37GW	2000 cc, 2300 cc	83-84	**VKC 3592**
Delica P24W	2400 cc	89-91	**VKC 3592**
Delica L039P, P25W	2500 cc	86-91	**VKC 3579**

www.bergab.ru Берг АБ bergab@ya.ru Тел. (495)-228-06-21, факс (495) 223-3071

MITSUBISHI .../...

L200 / L300 / Delica

L200 L021P	1600 cc	78-80	**VKC 3505**
L200 L021PFS,L025P0	1600 cc	80-82	**VKC 3552**
L200 L021P	1600 cc	80-83	**VKC 3552**
L200 K01T, K11T	1600 cc	87-11/94	**VKC 3552**
L200 L022P, L022G	2000 cc	81-83	**VKC 3592**
L200 K02T, K12T, K22T, K32T, K15T, K35T	2000 cc, 2400 cc	86-94	**VKC 3592**
L200 L026P, L026G, L028P, L028G	2000 cc & Diesel	83 |->	**VKC 3592**
L200 L..P,L..G	2000 cc, 2300 cc	80 |->	**VKC 3592**
L200 K03T, K24T, K34T	Diesel 4WD	87-94	**VKC 3579**
L200 K04T	Diesel LHD	87-88	**VKC 3592**
L200 K04T	Diesel LHD	89 |->	**VKC 3579**
L200 K13T, K14T, K24T	2500 cc, 2600 cc, Diesel 4WD LHD	90-94	**VKC 3579**
L200 K14T, K24T	Diesel Pick-up LHD, Diesel(4WD)LHD	87-90	**VKC 3592**
L200 K04T,K24T,K14T,K34T	Diesel RHD(4WD), Except Pick-up LHD	87 |->	**VKC 3579**
L300 L031P, L032P	1400 cc, 1600 cc	80-86	**VKC 3552**
L300 P01V, P01W, P02V, P02W, P12V, P12W	1400 cc, 1600 cc	87-90	**VKC 3552**
L300 L037G	2000 cc	85-87	**VKC 3552**
L300 P03W, P23W	2000 cc	87-90	**VKC 3592**
L300 L037G	2000 cc 4WD	85-87	**VKC 3592**
L300 L035G	1800 cc 4WD	83-85	**VKC 3552**
L300 P05V, P05W, P15V, P15W, P25V, P25W,P45V	2500 cc Diesel	87-94	**VKC 3579**
L300 L038P, L068P; L062P, L065P	Diesel 1600 cc, 1800 cc	83-86	**VKC 3552**
L300 Minibus/Colt Minibus T120	1400 cc	71-79	**VKC 3543**
L300 Minibus/Colt Minibus L031PW, L032PW	1400 cc, 1600 cc	79-82	**VKC 3505**
L300 Minibus/Colt Minibus L035GW/PW/PWQ	1600 cc, 1800 cc	81 |->	**VKC 3552**
L300 Minibus/Colt Minibus L038PW, L068PW	1800 cc, 2300 cc	82 |->	**VKC 3592**
L300/Delica L031P	1400 cc	79-82	**VKC 3505**
L300/Delica L036P	1400 cc	82-86	**VKC 3592**
L300/Delica L036P	1400 cc	86 |->	**VKC 3552**
L300/Delica LO32P,LO34P,LO33PWE,LO33WUNU	1400 cc, 1600 cc	79-86	**VKC 3592**
L300/Delica PO1V,LO33P,P02V,P12V,L063P,LO35PW,LO35P, LO35G	1400 cc, 1600 cc, 1800 cc	81 |->	**VKC 3552**
L300/Delica LO37G,LO38G,P03W,P23V,P23W,LO38P,L068P, LO68PW	2000 cc, 2300 cc	83 |->	**VKC 3592**
L300/Delica LO39P,P05V,P15V,P15W,P05W,P25V,P25W	2300 cc, 2500 cc	86-95	**VKC 3579**

Mini Cab

Mini Cab M-L015PV, M-L015P	550 cc	83 |->	**VKC 3509**
Mini Cab E-H14A	550 cc	87-88	**VKC 3562**
Mini Cab U14T, U14V, U15T, U15V	550 cc	87-90	**VKC 3562**
Mini Cab U14TG, U14VG, U15TG, U15VG	550 cc	90-91	**VKC 3562**
Mini Cab M-U12T,M-U12V,M-U11T,U11V,M-U12T,U12V	550 cc 4WD Gasoline	85-86	**VKC 3562**
Mini Cab M-U14T, M-U15V, M-U15T	550 cc 4WD Gasoline	87-88	**VKC 3562**
Mini Cab M-H15T,M-H15V	550 cc 4WD Gasoline	87-88	**VKC 3562**
Mini Cab U18T,U18TP,U18V,U19T,U19V;U14TG,U14VG,U15TG, U15VG	550 cc, 660 cc	90-91	**VKC 3562**

Rosa Bus

Rosa BE434F, 435F	3300 cc, 3600 cc	86-89	**VKC 3559**
Rosa BusB207	2400 cc	73-79	**VKC 3545**
Rosa Bus B217	2400 cc	75-79	**VKC 3512**
Rosa Bus BC212	2600 cc	79 |->	**VKC 3592**

Rosa Bus B200,210,215	2700 cc	73-78	**VKC 3545**
Rosa Bus BE201D,211D	3300 cc	77-79	**VKC 3559**
Rosa Bus BE201,201D,211,211D	3300 cc	79-82	**VKC 3523**
Rosa Bus BE211,BH214F	3300 cc	82 |->	**VKC 3559**
Rosa Bus B360	4000 cc	73-79	**VKC 3545**
Rosa Bus BH212,212F	4000 cc	79-82	**VKC 3514**

MOSKVICH

MOSKVICH		c)	**VKC 2520**

NISSAN

120Y, 130Y, 140Y, 150Y All Models	1200 cc, 1300 cc, 1400 cc, 1500 cc	73-83	**VKC 3500**
140B, 160B, 180B, 200B All Models	1400 cc, 1600 cc, 1800 cc, 2000 cc	70-79	**VKC 3500**
160K, 180K C,KC,VC 110	1600 cc	72-74	**VKC 3521**
160K, 180K C,BC,HC,KC,PC,VC,KBC,KHC,KPC,VBC,VPC, WPC 110,111,210,211	1600 cc, 1800 cc	72-81	**VKC 3500**
180K, 240KGT C210	1800 cc, 2400 cc	78-81	**VKC 3500**
180SX, 200SX S,HS,KS,PS,US,KHS,KPS	1800 cc, 2000 cc	79-83	**VKC 3500**
300ZX, SX Z31, S13	3000 cc	87-94	**VKC 3500**
2000 SX	DOHC 16V	91-95	**VKC 3565**
2000 SX	DOHC 16V	91-95	**VKC 3565**
2000 DR Turbo All Models	2000 cc	72 |->	**VKC 3500**
200C - all models except STD	2000 cc	71-83	**VKC 3500**
200C - STD model ONLY	2000 cc	79-83	**VKC 3519**
200C, 260C 230	2000 cc, 2600 cc	71-75	**VKC 3500**
200K, 240K, 280K All Models	2000 cc, 2400 cc, 2800 cc	72-81	**VKC 3500**
200L C230	2000 cc	77-81	**VKC 3500**
200L, 240L, 280L All Models	2000 cc, 2400 cc, 2800 cc	72-80	**VKC 3500**
220C - all models except STD & Q series Taxi	2200 cc	79-83	**VKC 3500**
220C - STD model & Q series Taxi only	2200 cc	71-83	**VKC 3519**
220C, 240C, 260C, 280C 330	2400 cc, 2600 cc, 2800 cc & Diesel	76-79	**VKC 3500**
240C, 260C, 280C All Models	2400 cc, 2600 cc, 2800 cc	73-83	**VKC 3500**
240L C230	2400 cc	79-81	**VKC 3500**
240Z, 260Z, 280Z, 280ZX, 300ZX / Fairlady Z All Models		69 |->	**VKC 3500**
710 140J, 160J	1400 cc /GBX:3	73-77	**VKC 3519**
710 140J, 160J	1400 cc, 1600 cc	73-77	**VKC 3500**
810 160B, 180B	1600 cc, 1800 cc	77-80	**VKC 3500**
A10 140J, 160J	1400 cc, 1600 cc	78-81	**VKC 3500**
Ad Van			
Ad Van VB11, VHB 11	1300 cc, 1500 cc	82-90	**VKC 3560**
Ad Van VSB11, VHB 11	1500 cc, 1700 cc	82-90	**VKC 3555**
Ad Van VSB11	1700 cc	82-85	**VKC 3560**
Altima			
Altima A31	2000 cc LHD	89 |->	**VKC 3565**
Altima A31	2000 cc RHD, 2400	89 |->	**VKC 3500**
Auster/Stanza			
Auster/Stanza PA11	1600 cc	78-91	**VKC 3500**
Auster/Stanza T11,KT11,FT11,T12,FT12	1600 cc	81-86	**VKC 3560**
Auster/Stanza GPA10:FPA,FRA,GPA,GRA11	1600 cc, 1800 cc	77-81	**VKC 3500**
Auster/Stanza E-T11, PT11, KPT11	1600 cc, 1800 cc	83-84	**VKC 3560**
Auster/Stanza PT11, KPT11, FPT11	1800 cc	81-85	**VKC 3560**
Auster/Stanza PT12,FPT12	1800 cc	85 |->	**VKC 3555**
Auster/Stanza PT12,FPT12	1800 cc Turbo DOHC TWC	85 |->	**VKC 3598**

NISSAN .../...

Auster/Stanza FHLT11,KHLT11	2000 cc	81-85	**VKC 3560**
Auster/Stanza HT12,FHT12,KHT12	2000 cc	86 |->	**VKC 3598**
B110	1200 cc	70-73	**VKC 3500**
B210	1200 cc	73-77	**VKC 3500**
B310	1200 cc, 1400 cc, 1500 cc	78-82	**VKC 3500**
Be-1	1000 cc	87-88	**VKC 3551**
Bluebird			
Bluebird TSU12	-	09/87-89	**VKC 3641**
Bluebird RU11,VRU11, E-RU11, E-V12	1500 cc, 1600 cc, 1600 cc FWD	83-88	**VKC 3560**
Bluebird WRJ,WTJ,WMJ,WPJ,WUJ 910	1600 cc, 1800 cc	79-83	**VKC 3500**
Bluebird J,P,U,RJ,TJ,KJ,KP,KM,KU,MJ,PJ,UJ,VJ,KPJ,KUJ,VTJ	1600 cc, 1800 cc	79-83	**VKC 3500**
Bluebird 910	1600 cc, 1800 cc	80-83	**VKC 3500**
Bluebird U11,T12	1600 cc, 1800 cc	86 |->	**VKC 3555**
Bluebird U11	1600 cc, 1800 cc, 2000 cc	84-85	**VKC 3560**
Bluebird WU11	1800 cc	85-90	**VKC 3555**
Bluebird E-RU12	1800 cc	87-88	**VKC 3611**
Bluebird U12	1800 cc	88 |->	**VKC 3555**
Bluebird U12	1800 cc DOHC	90 |->	**VKC 3611**
Bluebird U11,KU11,WU11	1800 cc FWD	85 |->	**VKC 3555**
Bluebird U11, KU11, WU11, EU11, VEU11, WEJ11 FU11, KFU11	1800 cc FWD Turbo, 2000 cc	83-85	**VKC 3598**
Bluebird T12,U11	1800 cc, 2000 cc	86-92	**VKC 3611**
Bluebird Y,KY,JY,JKY 910	2000 cc	79-83	**VKC 3500**
Bluebird EJ,VEJ,WEJ 910	2000 cc	80-83	**VKC 3565**
Bluebird VEU11, EU11, N-EU11,SU12	2000 cc	83-90	**VKC 3598**
Bluebird U12	2000 cc	88 |->	**VKC 3611**
Bluebird U12	2000 cc	88 |->	**VKC 3598**
Bluebird N-VEU11	2000 cc Turbo	83 |->	**VKC 3581**
Bluebird U11	GBX:5 Trans CA20S Engine	86-88	**VKC 3611**
Bluebird U12	GBX:5 Trans KA24E Engine	89-89	**VKC 3610**
Bluebird 910	Diesel	80-83	**VKC 3565**
Bluebird U11	Diesel	84 |->	**VKC 3598**
Bluebird T12	Diesel, 1800 cc Turbo	86 |->	**VKC 3598**
Bluebird Maxima YU, KYU, WYU11	2000 cc	83-85	**VKC 3581**
Bluebird Wagon U11	CA20S Engine Type /GBX:5 Trans	86-88	**VKC 3611**
Bluebird/Bluebird Estate Wagon 410/11 PA410, WPA410/1	1000 cc , 1200 cc, 1300 cc	63-67	**VKC 3519**
C20 Series All Models	1200 cc, 1400 cc	75 |->	**VKC 3500**
C341 Truck DC, YC, MC341	2000 cc, 3000 cc, 3300 cc	79 |->	**VKC 3500**
Cedric			
Cedric MY30, NJY31, TNJY31, CMJY31, MYJ31	2000 cc	84-90	**VKC 3565**
Cedric E-KY30, Y30, WY30, PY30, Y31, 430, N-UY30	2000 cc, 2400 cc, 2800 cc, 3000 cc & Diesel	80-89	**VKC 3500**
Cedric UY31, TY31, VY30, TUJY31, UYJ31	2000 cc, 2800 cc	87-90	**VKC 3500**
Cedric N-VHY30, HY30, KHY30, WHY30; E-KPY30	2800 cc, 2000 cc, 3000 cc	83-84	**VKC 3500**
Cedric Y31	Diesel	88 |->	**VKC 3610**
Cedric/Gloria All Models	2000 cc, 2300 cc, 2800 cc, 3000 cc	83-87	**VKC 3500**
Cefiro			
Cefiro E-A31,E-CA31	2000 cc	88-90	**VKC 3500**
Cefiro A31	2000 cc LHD	89 |->	**VKC 3565**
Cefiro A31	2000 cc RHD, 2400 cc	89 |->	**VKC 3500**
Cherry			
Cherry 100A E10,KE10,VE10,WE10	1000 cc	70-73	**VKC 3594**
Cherry 100A FII E10,KE10,VE10,WE10,BF,KBF,VBF,WBF10	1000 cc	74-78	**VKC 3595**

www.bergab.ru Берг АБ bergab@ya.ru Тел. (495)-228-06-21, факс (495) 223-3071

Cherry 100A FII BF,KBF,VBF,WBF10,BN,KBN,VBN,WBN10	1000 cc	78-82	**VKC 3550**
Cherry 100A FII PE10,KPE10,VPE10,F10,KF10,VF10	1200 cc	70-78	**VKC 3595**
Cherry 120A, 140A, -II All Models	1200 cc, 1400 cc	78-81	**VKC 3550**
Cherry Vanette All Models	1200 cc, 1500 cc, 2000 cc	85-91	**VKC 3500**
Cherry/Cherry Coupe E10, KE10	1000 cc, 1200 cc	70-75	**VKC 3549**
Fairlady			
Fairlady SR311	1600 cc /GBX:4	67-69	**VKC 3533**
Fairlady Z All Model except CZ/CGZ/Z/GZ 32	2000 cc, 2400 cc, 2800 cc, 3000 cc	69-91	**VKC 3500**
Fairlady Z CZ/CGZ/Z/GZ 32	3000 cc	89-91	**VKC 3565**
Gazelle			
Gazelle E-BS12,RBS12,US12,RUS12,JS12,RJS12,S12,RS12	1800 cc	85-86	**VKC 3500**
Gazelle (R)S,JS,US 12:S110:(K)S,PS 110Y	1800 cc, 2000 cc	79-85	**VKC 3500**
Gloria			
Gloria MY30, NJY31, TNJY31	2000 cc	84-89	**VKC 3565**
Gloria VY30	2000 cc	87-90	**VKC 3500**
Gloria CMJY31, MJY31	2000 cc	89-90	**VKC 3565**
Gloria E-KY30, Y30, WY30, KPY30, PY30	2000 cc, 3000 cc	83-89	**VKC 3500**
Gloria TY31, TUJY31, UJY31, UY31	2000 cc, 2800 cc	87-89	**VKC 3500**
Gloria N-VHY30, HY30, KHY30, WHY30	2800 cc	83-84	**VKC 3500**
Gloria N-UY30, N-KUY30	2800 cc	85-86	**VKC 3500**
Gloria VUY30, WUY30	2800 cc	85-87	**VKC 3500**
Junior			
Junior 41, N41	1600 cc, 2000 cc	65-70	**VKC 3519**
Junior 140	2000 cc, 2400 cc & Diesel	70-74	**VKC 3519**
Junior 140	2000 cc, 2400 cc & Diesel	74 |->	**VKC 3500**
Junior Pickup All Models	1600 cc, 2000 cc, 2200 cc, 2500 cc	74-81	**VKC 3500**
Langley			
Langley E-PN12	1300 cc	84 |->	**VKC 3560**
Langley N-SN12, RSN12;E-RPN12;E-KHN12,RHN12,HN12	1300 cc, 1500 cc, 1700 cc	83-84	**VKC 3560**
Langley HN10R	1400 cc	80 |->	**VKC 3550**
Langley HN12,M12	1500 cc	82 |->	**VKC 3560**
Langley BFN13, BHN13	1500 cc	88-90	**VKC 3555**
Langley SN12	1700 cc	83 |->	**VKC 3560**
Langley BSN13	1700 cc	86-90	**VKC 3555**
Langley FC33	1800 cc	88-91	**VKC 3565**
Laurel			
Laurel E-FJC32	1800 cc Gasoline	87-88	**VKC 3565**
Laurel All Models	1800 cc, 2000 cc, 2400 cc, 2800 cc	80-84	**VKC 3500**
Laurel E-KUJC31, HJC31, UJC31, KHC31	2000 cc	83 |->	**VKC 3500**
Laurel E-HJC32	2000 cc	84 |->	**VKC 3500**
Laurel E-KGC32, KHC32	2000 cc	84-85	**VKC 3500**
Laurel C32	2000 cc	85 |->	**VKC 3565**
Laurel A31	2000 cc LHD	89 |->	**VKC 3565**
Laurel A31	2000 cc RHD, 2400 cc	89 |->	**VKC 3500**
Laurel C31	2000 cc, 2400 cc & Diesel	81-84	**VKC 3500**
Laurel HCC33;HC33,SC33	2000 cc, 2800 cc	88-91	**VKC 3500**
Laurel C32	2400 cc, 3000 cc	85 |->	**VKC 3500**
Laurel N-EJC32	2800 cc	84-86	**VKC 3500**
Laurel N-SJC32	2800 cc	85-86	**VKC 3500**
Laurel SJC32, TSJC32	2800 cc	86-90	**VKC 3500**
Laurel Altima, Cefiro A31	2000 cc (LHD)	89 |->	**VKC 3565**
Laurel Altima, Cefiro A31	2000 cc (RHD), 2400 cc	89 |->	**VKC 3500**

www.bergab.ru Берг АБ bergab@ya.ru Тел. (495)-228-06-21, факс (495) 223-3071

NISSAN .../...

Laurel Spirit HB, EHB11	1500 cc	82 |->	**VKC 3560**
Laurel Spirit FB12	1500 cc	87-90	**VKC 3555**
Laurel Spirit E-FNB12, Q-SB12	1500 cc 4WD, 1700 cc	87-88	**VKC 3555**
Laurel Spirit E-HB11,KHB11,WHB11,RHB11;E-B11;N-SB11, WSB11	1300 cc, 1500 cc, 1700 cc	83-84	**VKC 3560**
Laurel Spirit SB12, EB12	1600 cc, 1700 cc	86-90	**VKC 3555**
Laurel Spirit SB11	1700 cc	82 |->	**VKC 3560**
Laurel Spirit - only RS5F30A trans. E-EB12, E-FB12	1500 cc, 1600 cc	87-88	**VKC 3555**
Laurel Spirit - only RS5F310A trans. E-EB12, E-FB12	1500 cc, 1600 cc	87-88	**VKC 3598**
Leopard			
Leopard E-JF30	1800 cc	83-84	**VKC 3500**
Leopard HF,JF,PF 30:L28,L20E-T	1800 cc, 2000 cc	80 |->	**VKC 3500**
Leopard E-GF30	2000 cc	85-86	**VKC 3500**
Leopard E-GF31	2000 cc	85-88	**VKC 3500**
Leopard E-HF30	2000 cc, 2800 cc, 3000 cc	83 |->	**VKC 3500**
Leopard E-PF30	2000 cc, 2800 cc, 3000 cc	83-84	**VKC 3500**
Leopard E-NF30	2000 cc, 2800 cc, 3000 cc	84 |->	**VKC 3500**
LG/ Liberta			
LG Series LG54V,P-LG54V	11.0 Ton	88 |->	**VKC 3527**
Liberta Ville E-PN12	1300 cc	84 |->	**VKC 3560**
Liberta Ville N-SN12, RSN12; E-RPN12	1300 cc, 1700 cc	83-84	**VKC 3560**
Liberta Ville E-KHN12, RHN12, HN12	1500 cc	83-84	**VKC 3560**
Liberta Ville BFNN13, BHNN13	1500 cc	88-90	**VKC 3560**
Liberta Ville BSN13	1700 cc	86-90	**VKC 3555**
Liberta,/Liberta Ville HN..:T11:PT11	1500 cc, 1600 cc, 1800 cc	81 |->	**VKC 3560**
Liberta/Liberta Ville E-HN12,SN12	1700 cc	86 |->	**VKC 3560**
LW Series p-LW46	11.25 Ton	83-84	**VKC 3541**
March / Micra			
March / Micra K10, YK10	1000 cc	82-94	**VKC 3551**
March	1000 cc Turbo	85 |->	**VKC 3560**
Maxima / N10			
Maxima A32	3000 cc	92-95	**VKC 3581**
Maxima J30	3000 cc	89 |->	**VKC 3581**
N10 100A, 120A	1000 cc,1200 cc	79-81	**VKC 3550**
N10 140A	1400 cc	81 |->	**VKC 3550**
NX Coupe FB13, EB13	1500 cc, 1600 cc	90-90	**VKC 3555**
Pao PK10	1000 cc	89-91	**VKC 3551**
Navara/Pathfinder			
Navara D21	1600 cc, 2000 cc, 2400 cc Diesel	86 I->	**VKC 3500**
Navara D21	Diesel	88 I->	**VKC 3610**
Navara D21	Diesel	88 I->	**VKC 3581**
Pathfinder WD21	2400 cc	87 |->	**VKC 3500**
Pathfinder WD21	Diesel	88 |->	**VKC 3581**
Patrol			
Patrol All Models	2800 cc, 3000 cc, 4000 c	88 I->	**VKC 3500**
Patrol All Models	4000 cc	70-80	**VKC 3538**
Patrol Y60	4200 cc, Diesel	88 I->	**VKC 3500**
Patrol Y60	4200 cc, Diesel Turbo	89-93	**VKC 3612**
Pimera			
Pimera P10E	SR20DE/I-4WD	91-94	**VKC 3651**

Prairie			
Prairie BM10	1500 cc	85-88	**VKC 3555**
Prairie BM10,VBM10	1500 cc FWD	82-85	**VKC 3560**
Prairie BM10,VBM10	1500 cc FWD	85 |->	**VKC 3555**
PrairieE-BM10, VBM10, PM10	1500 cc, 1800 cc	83-84	**VKC 3560**
Prairie M10	1500 cc, 1800 cc	83-85	**VKC 3560**
Prairie M10	1500 cc, 1800 cc	85 |->	**VKC 3555**
Prairie PM10	1800 cc FWD	82-85	**VKC 3560**
Prairie E-M11	2000 cc	83 |->	**VKC 3611**
Prairie E-HNM10	2000 cc	85-86	**VKC 3598**
Prairie NM11	2000 cc	88-90	**VKC 3598**
Prairie M11	2000 cc 2WD	89 |->	**VKC 3611**
Prairie M10	2000 cc 4WD	86-93	**VKC 3598**
Prairie M11	2000 cc 4WD	89 |->	**VKC 3598**
Prairie HNM10	2000 cc FWD	85-88	**VKC 3598**
Prairie M11	2WD /GBX:5	89 |->	**VKC 3610**
Presea			
Presea R10	1500 cc	90 |->	**VKC 3555**
Pulsar			
Pulsar MN/UN/KUN/TUN/KMN10,HN/KHN/RHN12,BN/RBN13		81-87	**VKC 3560**
Pulsar N12	1000 cc	82-87	**VKC 3599**
Pulsar RBN12	1000 cc (UK models)	82-87	**VKC 3599**
Pulsar N12/13/14, FNN14E-PN12, E-HNN13, L-VHB11	1000 cc, 1300 cc, 1400 cc, 1500 cc, 1600 cc 4WD	82-91	**VKC 3560**
Pulsar MN/UN/KUN/TUN/KMN10,HN/KHN/RHN12,BN/RBN13	1300 cc, 1500 cc	81 |->	**VKC 3560**
Pulsar E-RPN12;E-HN12,RHN12,KHN12;N-SN12,RSN12	1300 cc, 1500 cc, 1700 cc	83-84	**VKC 3560**
Pulsar HN13,RHN13	1500 cc	86-88	**VKC 3555**
Pulsar FNN13	1500 cc	88-90	**VKC 3560**
Pulsar N13	1500 cc, 1600 cc 2WD	87-94	**VKC 3555**
Pulsar E-HN13, RHN13, FHN13; N-SN13, FSN13	1500 cc, 1700 cc	85-86	**VKC 3555**
Pulsar RHN13	1600 cc	86 |->	**VKC 3598**
Pulsar EN14, FN14	1600 cc	90-91	**VKC 3598**
Pulsar N13	1600 cc 2WD	89 |->	**VKC 3555**
Pulsar N13	1600 cc 4WD	87-88	**VKC 3560**
Pulsar KN13	1600 cc DOHC	87 |->	**VKC 3598**
Pulsar N13	1600 cc DOHC	87-88	**VKC 3598**
Pulsar EN13,SN13	1600 cc, 1700 cc	86-90	**VKC 3598**
Pulsar E-EN13,E-REN13;N-VSB11;E-BN13,RBN13,L-VB11	1300 cc, 1600 cc, 1700 cc	85-86	**VKC 3560**
Pulsar RSN12	1700 cc	83 |->	**VKC 3560**
Pulsar HN12,PN12	1700 cc	86 |->	**VKC 3560**
Pulsar SN13,FSN13	1700 cc	86 |->	**VKC 3555**
Pulsar KN13	1800 cc DOHC	88 |->	**VKC 3611**
Pulsar N13	1800 cc DOHC	89 |->	**VKC 3611**
Pulsar RNN14	2000 cc	90-91	**VKC 3581**
Pulsar N12	Diesel	82-87	**VKC 3560**
Pulsar N13	Diesel	87 |->	**VKC 3555**
Pulsar Ad Van	1500 cc	82-90	**VKC 3555**
Pulsar EXA	1600 cc DOHC	87 |->	**VKC 3598**
Pulsar EXA	1800 cc DOHC	88 |->	**VKC 3611**
Pulsar NX	CA18D Engine	87-88	**VKC 3611**
Safari			
Safari All Models except Y60	3300 cc, 4WD Diesel	83-88	**VKC 3500**
Safari Y60	TB42 /42S Engine	86-90	**VKC 3612**

NISSAN .../...

Sentra			
Sentra	2000 cc	92	**VKC 3555**
Sentra B12	1000 cc, 1300 cc, 1500 cc	86-90	**VKC 3560**
Sentra B12	1500 cc, 1600 cc 2WD	86-90	**VKC 3555**
Sentra B12	1600 cc 4WD	87-90	**VKC 3560**
Sentra B12	1600 cc DOHC	87-88	**VKC 3598**
Sentra B12	1800 cc DOHC	89-90	**VKC 3611**
Sentra B11	Diesel	83-86	**VKC 3560**
Sentra B12	Diesel	86-90	**VKC 3555**
Sentra B13	1600 cc	90-94	**VKC 3555**
Silvia			
Silvia S,JS,RS,BS,RJS,RBS 12	1800 cc	83 |->	**VKC 3500**
Silvia E-S12, RS12, JS12, RJS12	1800 cc	83-86	**VKC 3500**
Silvia E-US12, RUS12	1800 cc	85-86	**VKC 3500**
Silvia E-BS12, RBS12	1800 cc	86 |->	**VKC 3500**
Silvia PJS,RPJS 12	2000 cc	83 |->	**VKC 3560**
Silvia E-RUS12, US12	2000 cc	83-84	**VKC 3500**
Silvia US,RUS 12	2000 cc	83-86	**VKC 3500**
Skyline			
Skyline CJR,FJR,KFJR,RCJR,RFJR,VCJR,VPJR 30	1800 cc	81-85	**VKC 3500**
Skyline R30	1800 cc	82-83	**VKC 3500**
Skyline E-FJR30, L-VPJR30	1800 cc	83-84	**VKC 3500**
Skyline FJ,KFJ 30	1800 cc	85 |->	**VKC 3565**
Skyline VPJR30	1800 cc	85-89	**VKC 3500**
Skyline FJR31	1800 cc	85-89	**VKC 3565**
Skyline E-FJR31	1800 cc	87-88	**VKC 3565**
Skyline FR32	1800 cc	89-91	**VKC 3565**
Skyline R,DR,HR,KR,BJR,KDR,KHR,RHR,UJR,KBJR,KUJR,VBJR	2000 cc	81 |->	**VKC 3500**
Skyline VSJR 30:HR,KHR 31	2000 cc	81 |->	**VKC 3500**
Skyline E-DR30, KHR30, KDR30, HR30, RHR30, N-VSJR3	2000 cc	83-84	**VKC 3500**
Skyline PJR31,WPJR31	2000 cc	85 |->	**VKC 3598**
Skyline HR31, YHR31	2000 cc	85-89	**VKC 3500**
Skyline R31	2000 cc	86 |->	**VKC 3565**
Skyline HR32, YHR32, BNR32	2000 cc, 2600 cc	89-91	**VKC 3500**
Skyline R30,MR,RMR,KMR 30	2000 cc, 2400 cc	81-85	**VKC 3500**
Skyline MR,RMR,KMR ,S,ER,KS,RER30	2400 cc, 2800 cc	81 |->	**VKC 3500**
Skyline N-ER30	2800 cc	83-84	**VKC 3500**
Skyline ER,RER 30	2800 cc	84 |->	**VKC 3565**
Skyline N-KSR31	2800 cc	87-88	**VKC 3565**
Skyline N-SR,KSR;E-HR,KHR;N-SR,N-KSR;E-FJR,WFJR 31,R30	1800 cc, 2000 cc, 2800 cc, 3000 cc	84-86	**VKC 3500**
Skyline - 3 Speed, 4 Speed	1500 cc	64-68	**VKC 3519**
Skyline - 3 Speed, 4 Speed	1500 cc	67-68	**VKC 3533**
Skyline - GT - 4 Speed	2000 cc	68-72	**VKC 3519**
Stanza			
Stanza E-T12	1600 cc	85-86	**VKC 3560**
Stanza E-T12	1600 cc	86 |->	**VKC 3555**
Stanza PA11, RA11	1600 cc, 1800 cc	78-91	**VKC 3500**
Stanza E-T11	1600 cc, 1800 cc	82-86	**VKC 3560**
Stanza PT11, KPT11	1600 cc, 1800 cc	83-84	**VKC 3560**
Stanza T12	1800 cc Turbo, 2000 & Diesel	86 |->	**VKC 3598**
Stanza T12	1800 cc, 2000 cc	86 |->	**VKC 3611**
Stanza T12	CA20S, CA20E Engine	86-89	**VKC 3611**

www.bergab.ru Берг АБ bergab@ya.ru Тел. (495)-228-06-21, факс (495) 223-3071

Sunny

Sunny B12	1000 cc, 1300 cc	85-90	**VKC 3560**
Sunny N13	1000 cc, 1300 cc	87 |->	**VKC 3560**
Sunny B13	1000 cc, 1300 cc, 1400 cc	90 |->	**VKC 3560**
Sunny KB11,WB11,HB11,KHB11,WHB11,B12,RB12,WB12, HNB12	1300 cc, 1500 cc	81 |->	**VKC 3560**
Sunny B11	1300 cc, 1500 cc	81-86	**VKC 3560**
Sunny N13	1400 cc, 1600 cc 4WD	89 |->	**VKC 3560**
Sunny HB12,RHB12,KHB12,WHB12	1500 cc	85 |->	**VKC 3555**
Sunny HNB12	1500 cc	85-87	**VKC 3560**
Sunny FB12, WFB12	1500 cc	87-90	**VKC 3555**
Sunny FNB13	1500 cc	90 |->	**VKC 3560**
Sunny HB12,RHB12	1500 cc Turbo	85 |->	**VKC 3560**
Sunny B12, N13	1500 cc, 1600 cc 2WD	86-88	**VKC 3555**
Sunny B12, N13	1500 cc, 1600 cc 4WD	87-88	**VKC 3560**
Sunny E-HB/RHB/KHB/HNB12,L-VHB11;L-VB/N-VSB11;E-HNB12	1300 cc, 1500 cc, 1700 cc(4WD)Gasoline	85-86	**VKC 3560**
Sunny EB12	1600 cc	86-90	**VKC 3598**
Sunny N13	1600 cc 2WD	89 |->	**VKC 3555**
Sunny E-HB11,KHB11,WHB11,RHB11;E-B11;N-SB11,WSB11	1300 cc, 1700 cc	83-84	**VKC 3560**
Sunny B12	1600 cc 2WD	89-90	**VKC 3555**
Sunny B12	1600 cc 4WD	87-90	**VKC 3560**
Sunny B12	1600 cc DOHC	87-88	**VKC 3598**
Sunny B13	1600 cc Diesel	90 |->	**VKC 3555**
Sunny SB11,WSB11,VSB11	1700 cc	82-85	**VKC 3560**
Sunny N-SB12, N-WSB12	1700 cc	85-86	**VKC 3555**
Sunny SB12, SB13	1700 cc	85-90	**VKC 3598**
Sunny N13	1800 cc DOHC	89 |->	**VKC 3611**
Sunny B12	1800 cc DOHC	89-94	**VKC 3611**
Sunny N12	Diesel	82-87	**VKC 3560**
Sunny B11	Diesel	83-86	**VKC 3560**
Sunny B12, N13	Diesel	86-90	**VKC 3555**
Sunny Ad Van VB11	1300 cc	82-90	**VKC 3560**
Sunny California E-B, E-HB, KHB, WHB, RHB N-SB11	1300 cc, 1500 cc, 1700 cc	83-84	**VKC 3560**
Sunny Truck B20	1000 cc	66-69	**VKC 3531**
Sunny Truck B122, GB122	1200 cc	81-89	**VKC 3500**
Sunny Vanette (All Models)	1200 cc, 1500 cc, 1800 cc, 2000 cc	83-91	**VKC 3500**

Terrano

Terrano N-VBYD21,WBYD21	3000 cc 4WD	86-91	**VKC 3050**
Terrano N-VBYD21	3000 cc 4WD B Gasoline	87-88	**VKC 3581**

NISSAN

Atlas

Atlas BF22, PF22	1600 cc, 2000 cc	88-90	**VKC 3500**
Atlas WF22, WGF22	2000 cc	90-91	**VKC 3500**
Atlas AF22, AGF22	2700 cc	86-90	**VKC 3500**
Atlas N-SBH40, DSH40, SGH40	2.0-3.0t	85-86	**VKC 3500**
Atlas N-DMH40, MGH40, MBH40, KAH40	2.0t	85-86	**VKC 3500**
Atlas DJH40, JGH40	3000 cc	89-90	**VKC 3500**
Atlas MH40, TMH40	3300 cc	86-90	**VKC 3500**
Atlas RH40	3500 cc	90-91	**VKC 3500**
Atlas/Condor All Models	2000 cc, 2300 cc	83 |->	**VKC 3500**

Caball

Caball All models	2000 cc	69-72	**VKC 3519**

www.bergab.ru Берг АБ bergab@ya.ru Тел. (495)-228-06-21, факс (495) 223-3071

NISSAN .../...

Caball/Civilian C340, QC340	2000 cc & Diesel	76-82	**VKC 3500**
Caball/Clipper All Models	2000 cc	73-76	**VKC 3500**
Caball/Clipper/Bison All Models	2200 cc, 3000 cc, 3300 cc	76-81	**VKC 3500**
Cabstar			
Cabstar F22	1600 cc, 2000 cc & Diesel, 1 - 1.5 Ton Truck	82 |->	**VKC 3500**
Cabstar All Models	1600 cc, 2000 cc, 2200 cc, 2300 cc, 2500 cc, 3300	76-81	**VKC 3500**
Cabstar H40	Diesel, 2 - 3 Ton Truck, 2800 cc, 2200 cc	82 |->	**VKC 3500**
Cabstar F22	TD23 Engine	86-90	**VKC 3610**
Caravan			
Caravan All Models except VYE/VYGE/VRE/VRGE 24	1800 cc, 2000 cc, 2300 cc	83-90	**VKC 3500**
Caravan VYE/VYGE/VRE/VRGE 24	2300 cc, 2700 cc	86-90	**VKC 3581**
Civilian			
Civilian All Models	2000 cc	69-72	**VKC 3519**
Civilian All Models	2000 cc, 2200 cc, 3000 cc, 3300 cc	73 |->	**VKC 3500**
Civilian W40	2200 cc, 2800 cc, Diesel	82 |->	**VKC 3500**
Civilian N-MW40, MGW40	3300 cc	83-84	**VKC 3500**
Civilian FGW40, FW40	3300 cc	84-88	**VKC 3500**
Civilian BGW40, BW40	3500 cc	90-91	**VKC 3565**
Civilian RGW40, RW40, RYW40	4200 cc	88-90	**VKC 3500**
Datsun Truck/Vanette			
Datsun L-VB11, VHB11, N-VSB11	1300 cc, 1500 cc, 1700 cc	85-86	**VKC 3560**
Datsun Ad Van VB11	1300 cc	82-90	**VKC 3560**
Datsun Truck All Models	1600 cc, 1800 cc, 2200 cc, 0.75, 1.0t	83-90	**VKC 3500**
Datsun Truck PD21, PGD21	2300 cc	87-89	**VKC 3610**
Datsun Vanette All Models	1200 cc, 1500 cc, 1800 cc, 2000 cc	85-91	**VKC 3500**
E20 Series All Models	1500 cc, 1600 cc, 2000 cc, 2200 cc, 2300 cc	73 |->	**VKC 3500**
F10 100A, 120A	1000 cc, 1200 cc	75-79	**VKC 3550**
Homer/Homy			
Homer Truck - Van All models	1500 cc, 1600 cc, 2000 cc, 2200 cc	72-81	**VKC 3500**
Homy L-VNE23;M-CHGE23,VHGE23,N-KSE23	1800 cc, 2000 cc	83-84	**VKC 3500**
Homy CHGE24, DHGE24, CTGE24,DTGE24	2000 cc	86-88	**VKC 3500**
Homy CYGE24, DYGE24	2300 cc	86-88	**VKC 3581**
Homy VRE24, VRGE24	2700 cc	88-90	**VKC 3581**
Homy/Caravan All Models	1500 cc, 1600 cc, 2000 cc, 2200 cc, 2300 cc	73-85	**VKC 3500**
Homy/Caravan N-VYE24,N-VYGE24	1.0 Ton	87-88	**VKC 3581**
Pickup			
Pick Up - Truck All Models	1200 cc	71 |->	**VKC 3500**
Pick Up - Truck All Models	1300 cc, 1500 cc	72-72	**VKC 3521**
Pick Up - Truck All Models	All Models	73-79	**VKC 3500**
Pickup B120	1200 cc	71 |->	**VKC 3500**
Pickup 620, N620	1300 cc, 1500 cc	72-73	**VKC 3521**
Pickup 620, N620	1300 cc, 1500 cc	73-79	**VKC 3500**
Pickup 720, D21	1600 cc, 1800 cc, 2200 cc, 2400 cc & Diesel 2WD	80-87	**VKC 3500**
Pickup	Diesel	88 |->	**VKC 3581**
Pickup	Diesel	88 |->	**VKC 3610**

www.bergab.ru Берг АБ bergab@ya.ru Тел. (495)-228-06-21, факс (495) 223-3071

Urban/Urvan/Microbus

Urban All Models	1600 cc, 1800 cc, 2000 cc, 2200 cc, 2300 cc	80-86	**VKC 3500**
Urban All Models	2300 cc	86 |->	**VKC 3581**
Urvan E23, E24, GC22	1600 cc, 1800 cc, 2000 cc, 2400 cc Diesel,1500 cc	81-87	**VKC 3500**
Urvan	Diesel	87 |->	**VKC 3581**
Microbus All Models	2000 cc, 2200 cc	80 I->	**VKC 3500**

Vanette/Violet

Vanette/Largo All Models	1200 cc, 1400 cc, 1500 cc, 2000 cc	79-91	**VKC 3500**
Violet/140J, 160J, 180J (K,V)A10,11:J(K)710,711:VJ710, (K,J,JK)P710:8(K)PA	1400 cc, 1600 cc	73-81	**VKC 3500**
Violet/140J, 160J, 180J JP710P	1600 cc	73-76	**VKC 3519**
Violet/140J, 160J, 180J T11, PT11	1600 cc, 1800 cc	81 |->	**VKC 3560**
Violet/140J, 160J, 180J JR710, JR711	1800 cc	75-77	**VKC 3519**
Violet/140J, 160J, 180J (K)RA11	1800 cc	78 |->	**VKC 3500**

OPEL

Admiral

Admiral 2.6, 2.8		->| 77	**VKC 2186**

Ascona

Ascona 1.3		->| 07/86	**VKC 2186**
		08/86-08/88	**VKC 2215**
Ascona 1.6		->| 08/81	**VKC 2186**
	GBX: F16	09/81-07/86	**VKC 2213**
		08/86-08/88	**VKC 2238**
	GBX: F13	08/86-08/88	**VKC 2215**
Ascona 1.7			**VKC 2186**
Ascona 1.8		c)	**VKC 2213**
		.c)	**VKC 2238**
Ascona 1.9			**VKC 2186**
Ascona 2.0		76-08/81 .c)	**VKC 2186**
		76-08/81 .c)	**VKC 2215**
		09/81-88 .c)	**VKC 2238**
Ascona 1.6 Diesel	16D - 1586 cc		**VKC 2213**
	16DA - 1586 cc ->| Mot 14498630		**VKC 2215**
	16DA - 1586 cc Mot 14498631 |->		**VKC 2238**
Ascona 2.0 Diesel			**VKC 2186**

Astra

Astra 1.4		92 |->	**VKC 2215**
Astra 1.4 16V		92 |->	**VKC 2215**
Astra 1.6	1.6LZ2	92 |->	**VKC 2238**
Astra 1.6	C1.6NZ,X1.6SZ,X1.6SZR,C1.6SE	92 |->	**VKC 2215**
Astra 1.6 16V	X1.6XEL	92 |->	**VKC 2215**
Astra 1.8	C1.8NZ / GBX: F16,F18	92 |->	**VKC 2238**
	C1.8NZ / GBX: F15	92 |->	**VKC 2215**
	C1.8SEL	92 |->	**VKC 2238**
Astra 1.8 16V	C1.8XE,X1.8XE,C1.8XEL	92 |->	**VKC 2238**
Astra 2.0	C2.0NE	92 |->	**VKC 2238**
Astra 2.0	C2.0XE	92 |->	**VKC 2238**
Astra 2.0 1.6V	X2.0XEV	92 |->	**VKC 2238**
Astra 1.7 Diesel	1.7D,1.7DR,X1.7DTL	92 |->	**VKC 2215**
Astra 1.7 Turbo Diesel	1.7TD,X1.7DTL	92 |->	**VKC 2238**

www.bergab.ru Берг АБ bergab@ya.ru Тел. (495)-228-06-21, факс (495) 223-3071

www.bergab.ru Берг АБ bergab@ya.ru Тел. (495)-228-06-21, факс (495) 223-3071

OPEL .../...

Calibra				
Calibra 2.0	C20NE,C2.0XE	89 |->		**VKC 2238**
Calibra 2.0 16V	X2.0XEV	89 |->		**VKC 2238**
Calibra 2.0 Turbo	C2.0LET	89 |->		**VKC 2238**
Calibra 2.5 16V	C2.5XE	89 |->		**VKC 2238**
Campo				
Campo 2.3	2.3			**VKC 3554**
Campo 2.2 Diesel	2.2D			**VKC 3505**
Campo 2.5 Diesel	2.5D			**VKC 3554**
Commodore				
Commodore				**VKC 2186**
Corsa				
Corsa 1.0		83-87		**VKC 2186**
Corsa 1.2		83-07/86		**VKC 2186**
		08/86 |->		**VKC 2215**
Corsa 1.3				**VKC 2215**
Corsa 1.4				**VKC 2215**
Corsa 1.6				**VKC 2215**
Corsa 1.5 Diesel	1.5D,X1.5D			**VKC 2215**
Corsa 1.5 Turbo Diesel	1.5TD,X1.5TD			**VKC 2215**
Corsa 1.7 Diesel	1.7D,X1.7D			**VKC 2215**
Frontera				
Frontera 2.8 Turbo Diesel	2.8TD			**VKC 3606**
Kadett				
Kadett 1.0,1.1		79-84		**VKC 2186**
Kadett 1.2		79-93		**VKC 2186**
Kadett 1.3		79-84		**VKC 2186**
	1.3N,1.3NB,1.3S,C1.3N	85-93		**VKC 2186**
	1.3N,1.3NB,1.3S,C1.3N / GBX: F10, F13	85-93		**VKC 2215**
Kadett 1.4	1.4NV,C1.4NZ	85-93		**VKC 2186**
	1.4NV,C1.4NZ / GBX: F10, F13	85-93		**VKC 2215**
Kadett 1.5		79-84		**VKC 2186**
Kadett 1.6	1.6S	85-93	c)	**VKC 2213**
	1.6SV,E1.6NZ,C1.6LZ,C1.6NZ	85-93	c)	**VKC 2215**
Kadett 1.7		79-84		**VKC 2186**
Kadett 1.8		85-93	c)	**VKC 2213**
	GBX: F16	85-93	c)	**VKC 2238**
	GBX: F10,F13	85-93	c)	**VKC 2215**
Kadett 1.9		79-84		**VKC 2186**
Kadett 2.0		85-93	c)	**VKC 2213**
		85-93	c)	**VKC 2238**
		85-93	c)	**VKC 2215**
Kadett 1.5 Turbo Diesel	1.5TD			**VKC 2238**
Kadett 1.6 Diesel		82-84	c)	**VKC 2213**
		85-93	c)	**VKC 2215**
		85-93	c)	**VKC 2238**
Kadett 1.7 Diesel	1.7D,1.7DR / GBX: F16	85-93	c)	**VKC 2238**
	1.7D,1.7DR / GBX: F13,F16	85-93	c)	**VKC 2215**
Kadett 1.7 Turbo Diesel	1.7TD	85-93	c)	**VKC 2238**

www.bergab.ru Берг АБ bergab@ya.ru Тел. (495)-228-06-21, факс (495) 223-3071

www.bergab.ru Берг АБ bergab@ya.ru Тел. (495)-228-06-21, факс (495) 223-3071

Manta				
Manta 1.3				**VKC 2186**
Manta 1.6				**VKC 2213**
Manta 1.8			c)	**VKC 2213**
			.c)	**VKC 2215**
Manta 1.9				**VKC 2213**
Manta 2.0			c)	**VKC 2213**
			.c)	**VKC 2215**
Monza				
Monza				**VKC 2186**
Monterey				
Monterey 3.1 Turbo Diesel				**VKC 3606**
Omega				
Omega 1.8				**VKC 2215**
Omega 2.0			87-92	**VKC 2215**
	2.0SE		94 |->	**VKC 2541**
Omega 2.0 16V	X2.0SE,X2.0XEV		94 |->	**VKC 2541**
Omega 2.3, 2.4			87-92	**VKC 2215**
Omega 2.5 16V	X2.5XE		94 |->	**VKC 2541**
Omega 2.6			87-92	**VKC 2215**
Omega 3.0			87-92	**VKC 2215**
Omega 3.0 24V	X3.0XE		94 |->	**VKC 2541**
Omega 2.3 Diesel, Turbo Diesel			87-92	**VKC 2215**
Omega 2.5 Turbo Diesel	U2.5TD		94 |->	**VKC 2541**
Rekord				
Rekord	TT			**VKC 2186**
Senator				
Senator	TT		c)	**VKC 2186**
	TT		c)	**VKC 2215**
Tigra				
Tigra 1.4 16V				**VKC 2215**
Tigra 1.6 16V				**VKC 2215**
Vectra				
Vectra 1.4				**VKC 2215**
Vectra 1.6			->| 11/95	**VKC 2215**
Vectra 1.8			->| 11/95	**VKC 2238**
Vectra 2.0; 2.0 16V			->| 11/95	**VKC 2238**
Vectra 2.5			->| 11/95	**VKC 2238**
Vectra 1.7 Diesel			->| 11/95	**VKC 2215**
Vectra 1.7 Turbo Diesel			->| 11/95	**VKC 2238**

PERODUA

Kancil L200	650 cc		07/94-96	**VKC 3668**

PEUGEOT

104				
104	TT			**VKC 2108**
106				
106 1.0	TU9 / GBX: MA			**VKC 2216**
106 1.1	TU1 / GBX: MA			**VKC 2216**

www.bergab.ru Берг АБ bergab@ya.ru Тел. (495)-228-06-21, факс (495) 223-3071

www.bergab.ru Берг АБ bergab@ya.ru Тел. (495)-228-06-21, факс (495) 223-3071

PEUGEOT .../...

106 1.3	TU2 / GBX: MA		**VKC 2216**
106 1.4	TU3 / GBX: MA		**VKC 2216**
106 1.4 Diesel	TUD3 / GBX: MA		**VKC 2216**
106 1.5 Diesel	TUD5 / GBX: MA		**VKC 2216**
204			
204 1.1		11/72 |->	**VKC 2111**
204 1.2, 1.4 Diesel			**VKC 2111**
205			
205 1.0	XV - 954 cc	->| 06/87	**VKC 2108**
	TU9 - 954 cc	07/87 |->	**VKC 2216**
205 1.1	E1 - 1118 cc / GBX: BE1,BE3	->| 07/89	**VKC 2193**
	F1 - 1124 cc / GBX: BE1,BE3	->| 07/89	**VKC 2193**
	XW - 1124 cc	->| 06/87	**VKC 2108**
	TU1 - 1124 cc	07/87 |->	**VKC 2216**
205 1.3	G1 - 1294 cc / GBX: BE1,BE3	->| 07/89	**VKC 2193**
		08/89 |->	**VKC 2216**
205 1.4	J2 - 1360 cc / GBX: BE1,BE3	->| 07/89	**VKC 2193**
	J2 - 1360 cc / GBX: BE1,BE3	08/89 |->	**VKC 2216**
	Y2 - 1442 cc / GBX: BE1,BE3	->| 07/89	**VKC 2193**
	XY - 1360 cc	->| 06/87	**VKC 2108**
	TU3 - 1360 cc	07/87 |->	**VKC 2216**
205 1.6	XU5 - 1580 cc / GBX: BE1,BE3	->| 07/89	**VKC 2193**
		08/89 |->	**VKC 2216**
205 1.9	XU9 - 1905 cc / GBX: BE1,BE3	->| 07/89	**VKC 2193**
		08/89 |->	**VKC 2216**
205 1.8 Diesel	XUD7 - 1769 cc / GBX: BE1,BE3	->| 07/89	**VKC 2193**
		08/89 |->	**VKC 2216**
205 1.8 Turbo Diesel	XUD7T - 1769 cc / GBX: BE3	91 |->	**VKC 2216**
205 1.9 Diesel	XUD9 - 1905 cc / GBX: BE1,BE3	->| 07/89	**VKC 2193**
		08/89 |->	**VKC 2216**
304			
304	TT	11/72 |->	**VKC 2111**
305			
305 1.1		->| 06/82	**VKC 2111**
		07/82 |->	**VKC 2193**
305 1.3, 1.5			**VKC 2111**
305 1.6, 1.9			**VKC 2193**
305 Diesel		->| 06/82	**VKC 2111**
		07/82 |->	**VKC 2193**
306			
306 1.1	TU1 - 1124 cc		**VKC 2216**
306 1.4	TU3 - 1360 cc		**VKC 2216**
306 1.8	XU7JP / GBX: BE3		**VKC 2216**
306 2.0	XU10J2 / GBX: BE3		**VKC 2216**
306 1.8 Diesel	XUD7 - 1769 cc / GBX: BE3		**VKC 2216**
306 1.9 Diesel	XUD9 - 1905 cc / GBX: BE3		**VKC 2216**
309			
309	TT	->| 06/89	**VKC 2193**
	TT	07/89 |->	**VKC 2216**

www.bergab.ru Берг АБ bergab@ya.ru Тел. (495)-228-06-21, факс (495) 223-3071

www.bergab.ru Берг АБ bergab@ya.ru Тел. (495)-228-06-21, факс (495) 223-3071

403			
403	TT		**VKC 1000**
404			
404	TT	-|| 09/67	**VKC 1000**
	TT	10/67 |->	**VKC 2051**
405			
405 1.4	TU3 - 1360 cc		**VKC 2216**
405 1.6	XU5 - 1580 cc / GBX: BE1,BE3		**VKC 2216**
405 1.7	XU7 - 1761 cc / GBX: BE3		**VKC 2216**
405 1.9	XU9 - 1905 cc / GBX: BE1,BE3		**VKC 2216**
405 2.0	XU10 - 1905 cc / GBX: BE3		**VKC 2216**
405 1.8 Diesel (->| Ch. S70514964)	XUD7 - 1769 cc / GBX: BE1,BE3	-|| 92	**VKC 2193**
405 1.8 Diesel (Ch. S70514965 |->)	XUD7 - 1769 cc / GBX: BE1,BE3	-|| 92	**VKC 2216**
405 1.8 Turbo Diesel (->| Ch. S70514964)	XUD7T - 1769 cc / GBX: BE1,BE3	-|| 92	**VKC 2193**
405 1.8 Turbo Diesel (Ch. S70514965 |->)	XUD7 - 1769 cc / GBX: BE1,BE3	-|| 92	**VKC 2216**
405 1.9 Diesel (->| Ch. S70514964)	XUD9 - 1905 cc / GBX: BE1,BE3	-|| 92	**VKC 2193**
405 1.9 Diesel (Ch. S70514965 |->)	XUD9 - 1905 cc / GBX: BE1,BE3		**VKC 2216**
406			
406 1.6	XU5 - 1580 cc		**VKC 2216**
406 1.8	XU7JP - 1761 cc		**VKC 2216**
406 1.8 16V	XU7JP4 - 1761 cc		**VKC 2216**
406 2.0i Turbo	XU10J2TE - 1998 cc / GBX: ML		**VKC 2542**
406 1.9 Turbo Diesel	XUD9SD / GBX: BE3		**VKC 2216**
406 2.1 Turbo Diesel	XUD11BTE 2088 - 1998 cc / GBX: ML		**VKC 2542**
504			
504 1.6, 1.8 (->| CH. 3650192)		70-83	**VKC 2051**
504 1.6, 1.8 (CH. 3650193 |->)		70-83	**VKC 2169**
504 1.9 (->| Ch. 3650192)		70-83	**VKC 2051**
504 1.9 (Ch. 3650193 |->)		70-83	**VKC 2169**
504 2.1 Diesel, 2.3 Diesel		-|| 82	**VKC 2051**
		82-83	**VKC 2169**
604			
604 2.0			**VKC 2051**
604 2.6			**VKC 2051**
604 2.8			**VKC 2051**
604 2.3 Turbo Diesel		-|| 82	**VKC 2051**
		83 |->	**VKC 2169**
604 2.5 Turbo Diesel		-|| 82	**VKC 2051**
		83 |->	**VKC 2169**
605			
605	GBX: ME5		**VKC 2239**
	GBX: BE3		**VKC 2216**
806			
806 1.8	XU7 / GBX: BE3		**VKC 2216**
806 2.0	XU10 / GBX: BE3		**VKC 2216**
806 2.0 Turbo	XU10J2TE / GBX: ME,ML		**VKC 2537**
806 1.9 Turbo Diesel	XUD9TE / GBX: ME,ML		**VKC 2537**
806 2.1 Turbo Diesel	XUD11BTE / GBX: ML		**VKC 2537**
Boxer			
Boxer 2.0	XU10J2 / GBX: ME		**VKC 2239**
Boxer 1.9 Diesel	XUD9 / GBX: ME		**VKC 2239**

www.bergab.ru Берг АБ bergab@ya.ru Тел. (495)-228-06-21, факс (495) 223-3071

PEUGEOT .../...

Boxer 1.9 Turbo Diesel	XUD9TE / GBX: ME		**VKC 2239**
Boxer 2.5 Diesel	DJ5 / GBX: ME		**VKC 2537**

Expert

Expert 1.6	1580 SPI / GBX: BE3		**VKC 2216**
Expert 1.8	XU7JP / GBX: BE3		**VKC 2216**
Expert 1.9 Diesel	XUD9 / GBX: BE3		**VKC 2216**
Expert 1.9 Turbo Diesel	XUD9TE / GBX: ME,ML		**VKC 2537**

J5

J5 1.8	XM - 1796 cc		**VKC 2115**
J5 1.9	XN - 1971 cc		**VKC 2115**
J5 2.5 Diesel, Turbo Diesel	CRD93 - 2498 cc		**VKC 2115**

Partner

Partner 1.8 Diesel	XUD7 / GBX: ”BE3”		**VKC 2216**
Partner 1.9 Diesel	XUD9 / GBX: ”BE3”		**VKC 2216**

J7 / J9

J7 / J9	TT	71 |->	**VKC 2146**

PORSCHE

924

924 2.0	0478	76-85	**VKC 2091**

PROTON

Saga C21A,C22A	1300 cc, 1500 cc	86-91	**VKC 3515**
Satria C96,97,98	1300 cc, 1500 cc, 1600 cc	09/94-96	**VKC 3515**
Perdana E55A	2000 cc	12/94-96	**VKC 3515**
Wira C96,97,98,99	1300 cc, 1500 cc, 1600 cc, 1800 cc	05/93-96	**VKC 3515**
Persona C96,97,98,99	1300 cc, 1500 cc, 1600 cc, 1800 cc	05/93-96	**VKC 3515**

RENAULT

Alpine

Alpine A110			**VKC 2080**
Alpine A310 1.6			**VKC 2080**
Alpine A310 2.7 6V		->| 10/80	**VKC 2150**
		11/80 |->	**VKC 2189**
Alpine 2.9 GT 6V			**VKC 2189**
Alpine 3.0			**VKC 2189**

Clio

Clio		90 |->	**VKC 2191**

Espace

Espace	TT	->| 95	**VKC 2189**
Espace 2.0i (JEOA)	F3R - 1998 cc	96 |->	**VKC 2433**

Fuego

Fuego 1.4 (R1360)			**VKC 2080**
Fuego (Except 1.4)	TT		**VKC 2189**

Laguna

Laguna 1.8i (B56A,S,Z-K56S,Z)	F3P - 1794 cc	07/95 |->	**VKC 2433**
Laguna 1.8i (B/K560,T)	F3P - 1794 cc		**VKC 2433**

www.bergab.ru Берг АБ bergab@ya.ru Тел. (495)-228-06-21, факс (495) 223-3071

Laguna 1.8i (B/K56D,M)	N7Q - 1848 cc	08/95 |->	**VKC 2433**
Laguna 2.0i (B/K56L)	F3R - 1998 cc		**VKC 2433**
Megane			
Megane	TT		**VKC 2433**
Twingo			
Twingo	TT	c)	**VKC 2191**
R4			
R4	TT	10/68 |->	**VKC 2080**
R5			
R5	TT		**VKC 2080**
R5 (Super Cinq)			
Super Cinq	TT		**VKC 2191**
R6 / R8			
R6 / R8	TT		**VKC 2080**
R9 / R11			
R9 / R11	TT		**VKC 2191**
R12			
R12 1.3			**VKC 2080**
R12 1.6 Gordini			**VKC 2115**
R14			
R14	TT		**VKC 2108**
R15			
R15 1.3			**VKC 2080**
R15 1.6			**VKC 2115**
R16 / R17			
R16 / R17 1.6			**VKC 2115**
R18			
R18 1.4			**VKC 2080**
R18 (Except 1.4)			**VKC 2189**
R19			
R19	TT		**VKC 2191**
R20			
R20 1.7; 2.0	Except GBX: NG		**VKC 2115**
	GBX: NG		**VKC 2189**
R20 2.2		c)	**VKC 2189**
		.c)	**VKC 2150**
R20 2.1 Diesel, Turbo Diesel			**VKC 2189**
R21			
R21 1.4	C2J - 1397 cc		**VKC 2191**
R21 1.6	C2L - 1565 cc		**VKC 2191**
R21 1.7	F2N,F3N - 1721 cc		**VKC 2191**
R21 2.0 (B/K/L48J)	F2R - 1965 cc		**VKC 2191**
R21 2.0 (B48R,Y-L485,Y)	J7R - 1995 cc		**VKC 2189**
R21 2.2 (L48K)	J7T - 2165 cc		**VKC 2189**
R21 1.9 Diesel (B/K/L48H,I-S48H)	F8Q - 1870 cc		**VKC 2191**
R21 2.1 Diesel, Turbo Diesel	J8S - 2068 cc		**VKC 2189**

www.bergab.ru Берг АБ bergab@ya.ru Тел. (495)-228-06-21, факс (495) 223-3071

www.bergab.ru Берг АБ bergab@ya.ru Тел. (495)-228-06-21, факс (495) 223-3071

RENAULT .../...

R25

R25	TT		**VKC 2189**

R30

R30	TT	->| 10/80	**VKC 2150**
	TT	11/80 |->	**VKC 2189**

RENAULT

R4

R4 F4; F6	TT	10/68 |->	**VKC 2080**

Express F40

F40	TT		**VKC 2191**

Trafic

Trafic 1.4	847, C1J - 1397 cc		**VKC 2080**
Trafic 1.6	A1M - 1647 cc		**VKC 2189**
Trafic 1.7	F1N - 1721 cc		**VKC 2191**
Trafic 2.0	J5R - 1995 cc		**VKC 2189**
Trafic 2.2	J7T - 2165 cc		**VKC 2189**
Trafic 2.1 Diesel	852,J8S - 2068 cc	c)	**VKC 2150**
		c)	**VKC 2189**
Trafic 2.5 Diesel	S8U - 2445 cc / GBX: PK1		**VKC 2189**

Master

Master	TT		**VKC 2190**

ROVER

Maestro

Maestro 1.3, 1.6			**VKC 2195**
Maestro 2.0			**VKC 3617**
Maestro 2.0 Diesel			**VKC 3617**

Metro

Metro 1.0		02/82 |->	**VKC 2217**
Metro 1.1		90 |->	**VKC 2216**
Metro 1.3		02/82 |->	**VKC 2217**
Metro 1.4 Diesel		90 |->	**VKC 2216**

Mini

Mini 1.0		02/82 |->	**VKC 2217**
Mini 1.3	1275 cc	90 |->	**VKC 2217**

Montego

Montego 1.3			**VKC 2195**
Montego 1.6	HONDA GBX		**VKC 3617**
	VW GBX		**VKC 2195**
Montego 2.0, 2.0 Turbo			**VKC 3617**
Montego 2.0 Turbo Diesel			**VKC 3617**

100 Series

111			**VKC 2216**
114			**VKC 2216**
114 Diesel			**VKC 2216**
114 1.5 Diesel			**VKC 2216**

www.bergab.ru Берг АБ bergab@ya.ru Тел. (495)-228-06-21, факс (495) 223-3071

www.bergab.ru Берг АБ bergab@ya.ru Тел. (495)-228-06-21, факс (495) 223-3071

200 Series

213			VKC 3542
214			VKC 2216
214 16V			VKC 2216
216		->| 12/89	VKC 2538
220		10/89 |->	VKC 2538
218 1.9 Diesel		10/92 |->	VKC 2538
218 Turbo Diesel		10/92 |->	VKC 2538

400 Series

414			VKC 2216
416			VKC 2216
420		10/92 |->	VKC 2538
418 1.9 Diesel		10/92 |->	VKC 2538
418 Turbo Diesel		10/92 |->	VKC 2538

600 Series

620	F20 - 1997 cc		VKC 3577
620 Turbo	20T4 - 1994 cc		VKC 2538
623	H23 - 2259 cc		VKC 3577

800 Series

800 (->| Ch. 200604)		->| 10/88	VKC 2538
800, 800 Turbo (Ch. 200605 |->)	20H, 20M4 - 1993 cc	11/88 |->	VKC 2538
827 6V (Ch. 200605 |->)	C27A - 2675 cc	11/88 |->	VKC 3577
825 Turbo Diesel (Ch. 200605 |->)	97A - 2499 cc	11/88 |->	VKC 2550

Triumph

Triumph Acclaim 1.3		81-85	VKC 3503

SAAB

95/96

95/96 1.5			VKC 2025

99

99 2.0		->| 75	VKC 2515
99 2.0		76 |->	VKC 2232
99 2.0 Turbo			VKC 2232

900

900 2.0		81-85 .a)	VKC 2232
		81-85 .b)	VKC 2218
900 2.0		86-93	VKC 2218
900 2.0		94 I-> .d)	VKC 2238
		.e)	VKC 2539
900 2.3, 2.5		94 I->	VKC 2238

9000

9000	TT		VKC 2218

SEAT

127 - 132

127 0.9, 1.05			VKC 2095
128 1.2, 1.4			VKC 2168
131 1.6, 1.8			VKC 2064
132 1.6			VKC 2064

www.bergab.ru Берг АБ bergab@ya.ru Тел. (495)-228-06-21, факс (495) 223-3071

www.bergab.ru Берг АБ bergab@ya.ru Тел. (495)-228-06-21, факс (495) 223-3071

SEAT .../...

1200 - 1430

1200 1.4			**VKC 2168**
1430 1.6			**VKC 2064**

Cordoba

Cordoba 1.05	AAU	93 |->	**VKC 2220**
Cordoba 1.3	AAV,2G	93 |->	**VKC 2220**
Cordoba 1.4	ABD	93 |->	**VKC 2220**
Cordoba 1.6	ABU	93 |->	**VKC 2220**
	1F	93 |->	**VKC 2195**
Cordoba 1.8	ABS	93 |->	**VKC 2195**
Cordoba 1.8 16V	ADL	93 |->	**VKC 2195**
Cordoba 2.0	2E	93 |->	**VKC 2195**
Cordoba 1.9 Diesel	1Y	93 |->	**VKC 2195**
Cordoba 1.9 Turbo Diesel	AAZ	93 |->	**VKC 2195**

Fura

Fura 0.9			**VKC 2195**
Fura 1.4			**VKC 2168**

Ibiza

Ibiza 0.9		->| 92	**VKC 2095**
Ibiza 1.1		93 |->	**VKC 2195**
Ibiza 1.05	AAU	93 |->	**VKC 2220**
Ibiza 1.2		->| 92	**VKC 2168**
Ibiza 1.4	ABD	93 |->	**VKC 2220**
Ibiza 1.5		->| 92	**VKC 2168**
Ibiza 1.6	ABU	93 |->	**VKC 2220**
	1F	93 |->	**VKC 2195**
Ibiza 1.8	ABS	93 |->	**VKC 2195**
Ibiza 1.8 16V	ADL	93 |->	**VKC 2195**
Ibiza 2.0	2E	93 |->	**VKC 2195**
Ibiza 1.7 Diesel		->| 92	**VKC 2219**
Ibiza 1.9 Diesel	1Y	93 |->	**VKC 2195**
Ibiza 1.9 Turbo Diesel	AAZ	93 |->	**VKC 2195**

Inca

Inca 1.4			**VKC 2195**
Inca 1.6			**VKC 2220**
Inca 1.9 Diesel			**VKC 2195**

Malaga

Malaga 1.2 1.5			**VKC 2168**
Malaga 1.7 Diesel			**VKC 2219**

Marbella

Marbella 0.8, 0.9			**VKC 2095**

Panda

Panda 0.9			**VKC 2095**

Ritmo

Ritmo			**VKC 2168**

Ronda

Ronda 1.2, 1.5			**VKC 2168**
Ronda 1.6, 2.0			**VKC 2219**
Ronda 1.7 Diesel			**VKC 2219**

www.bergab.ru Берг АБ bergab@ya.ru Тел. (495)-228-06-21, факс (495) 223-3071

www.bergab.ru Берг АБ bergab@ya.ru Тел. (495)-228-06-21, факс (495) 223-3071

Toledo

Toledo (Except 2.0 16V)		91 |->	VKC 2195
Toledo 2.0 16V	ABF	91 |->	VKC 2241

SEAT

Terra

Terra 0.9			VKC 2095
Terra 1.3 Diesel			VKC 2220

SUBARU

Alcyone

Alcyone E-AX4, E-AX7	1800 cc	87-90	VKC 3582
Alcyone E-AX4, E-AX7	1800 cc, 1800 cc 4WD Gasoline	85-86	VKC 3582

E/J/L Series/Justy

E Series EF10, EF12	1000 cc, 1200 cc - 2WD	87 |->	VKC 3509
FFI A14,15,43,44	1100 cc, 1300 cc	69-71	VKC 3509
J Series EF10, EF12	1000 cc, 1200 cc	87 |->	VKC 3509
J Series J10, J12	1000 cc, 1200 cc	87-91	VKC 3509
Justy E-KA6, E-KA5, E-KA8, E-KA7	1000 cc, 1200 cc	84-91	VKC 3509
Justy/J10 KA5, 6, 8	1000 cc, 1200 cc	84 |->	VKC 3509
L series EA65, EA71, EA81	1300 cc, 1600 cc 2WD, 1800 cc 2WD	84-86	VKC 3509
L series EA81, EA65, EA71,EA81	1300 cc, 1600 cc (4WD), 1800 cc	86 |->	VKC 3582
L series AG5, AC5, AC4, AN4, AN5	1600 cc, 1800 cc	86-89	VKC 3582

Legacy

Legacy SW	1800 cc	89-90	VKC 3660
Legacy BC3, BF3	1800 cc	89-90	VKC 3613
Legacy BCA, BFA	2000 cc	90 |->	VKC 3613

Leone

Leone E-AF1, E-AF2	1300 cc, 1600 cc	83 |->	VKC 3509
Leone L-AM1, L-AM2	1300 cc, 1600 cc	83 |->	VKC 3509
Leone EA65, EA71, EA81	1300 cc, 1600 cc 2WD, 1800 cc 2WD	80-85	VKC 3509
Leone EA65, EA71, EA81	1300 cc, 1600 cc 4WD, 1800 cc 4WD	80-85	VKC 3506
Leone E-AA3	1600 cc	85-86	VKC 3509
Leone E-AA3	1600 cc	86-90	VKC 3582
Leone E-AP2,AA2	1600 cc	86-90	VKC 3509
Leone E-AB2, AB3, AB4, AB5, AF3, AF5, AJ5	1600 cc, 1800 cc	83 |->	VKC 3509
Leone E-AA2,E-AA4	1600 cc, 1800 cc	85-86	VKC 3509
Leone E-AL5	1800 cc	84-86	VKC 3582
Leone E-AA5, E-AA7, E-AG5	1800 cc	84-89	VKC 3582
Leone E-AL7, E-AP5	1800 cc	84-89	VKC 3582
Leone E-AA4	1800 cc	85-86	VKC 3509
Leone E-AG6	1800 cc	85-86	VKC 3582
Leone Car, Van & Wagon AB1,AF1:A 21,22,24,25,32,61,62,64, 65:AM1	1100 cc, 1200 cc, 1300 cc, 1400 cc	71-85	VKC 3509
Leone Car, Van & Wagon A 26,27,33,34,66,67:AB,AW,AF,AM2,AB, AF,AM3	1600 cc	75-85	VKC 3509
Leone Car, Van & Wagon AB4, AB5	1600 cc, 1800 cc	79-82	VKC 3509
Leone Car, Van & Wagon AB,AM 4A:AB,AF,AM,AJ 5A	1600 cc, 1800 cc	79-84	VKC 3509
Leone Car, Van & Wagon AB4, AB5	1600 cc, 1800 cc	82 |->	VKC 3506
Leone Car, Van & Wagon AA3,AP3,AA,AG,AL,AP5	1600 cc, 1800 cc	84 |->	VKC 3582

www.bergab.ru Берг АБ bergab@ya.ru Тел. (495)-228-06-21, факс (495) 223-3071

SUBARU .../...

Leone Car, Van & Wagon AA2,AP2,AA,AG,AL 4	1600 cc, 1800 cc	84 |->	**VKC 3509**
Leone Car, Van & Wagon Europe only	1800 cc	82-84	**VKC 3506**
Leone Car, Van & Wagon	1800 cc 4WD Gasoline	85-88	**VKC 3582**
R-2 K12, 41	360 cc	69-74	**VKC 3505**
Loyale			
Loyale AC4,5, AG4,5, AN4,5, AK4,5	1800 cc	90-94	**VKC 3582**
Rex			
Rex K 22,23,24,26,29,42,43,44	360 cc, 500 cc, 560 cc - RWD	73-81	**VKC 3530**
Rex E-KF1	550 cc	83-86	**VKC 3509**
Rex M-KM1	550 cc	84 |->	**VKC 3509**
Rex KG1,KN1,KN2	550 cc	86-89	**VKC 3509**
Rex KG2	550 cc	87-89	**VKC 3509**
Rex KH1, KP1	550 cc	89-90	**VKC 3509**
Rex E-KM2,E-KM1,M-KM2	550 cc, 550 cc 4WD Gasoline	85-86	**VKC 3509**
Rex KH4, KP4	600 cc	90 |->	**VKC 3629**
Rex KF1:KM 1,2C,2D,2E	600 cc, 700 cc FWD	81 |->	**VKC 3509**

SUBARU

Domingo			
Domingo E-KJ5	1000 cc	84-86	**VKC 3509**
Domingo E-KJ8	1000 cc, 1200 cc - 4WD Gasoline	85-86	**VKC 3509**
Domingo/E10 EKJ6	1000 cc	84-86	**VKC 3509**
Sambar - Pickup/Van			
Sambar-Pickup/Van K 55,59,64,71,72,81	360 cc	73-76	**VKC 3505**
Sambar-Pickup/Van K 73,74,75,76,77,78,83,85,87,88:KT1,KR1	360 cc, 500 cc, 600 cc	76 |->	**VKC 3530**
Sambar-Pickup/Van KR2, KT2	550 cc	82-87	**VKC 3509**
Sambar-Pickup/Van M-KR1, M-KT1, M-KR2, M-KT2	550 cc	85-86	**VKC 3509**
Sambar-Pickup/Van KT6,KR5,KR6	550 cc	88 |->	**VKC 3629**
Sambar-Pickup/Van KT2,KR2	600 cc, 700 cc	82 |->	**VKC 3509**
Sambar-Pickup/Van KS3, KS4, KV3, KV4	660 cc	90 |->	**VKC 3629**
XT EA81	1800 cc 4WD Turbo	86 |->	**VKC 3582**

SUZUKI

LJ50, 50-2, 51, 50V-2, 80, 81	550 cc, 800 cc - 4WD	72 |->	**VKC 3505**
LJ80	800 cc 4WD	79-82	**VKC 3505**
SK408	800 cc	85 |->	**VKC 3505**
SK410	1000 cc	85 |->	**VKC 3505**
LJ50	550 cc 4WD	76-79	**VKC 3505**
450	450 cc	76-76	**VKC 3505**
Alto			
Alto M-CA71V	550 cc	84-88	**VKC 3529**
Alto M-CA72V	550 cc	86-88	**VKC 3529**
Alto M-CC71V	550 cc	84-85	**VKC 3567**
Alto M-CC71V,72V	550 cc 4WD	85 |->	**VKC 3567**
Alto M-CC72V	550 cc	86-88	**VKC 3567**
Alto M-CL11V	550 cc	88 |->	**VKC 3529**
Alto M-CL21V	660 cc	90-91	**VKC 3529**
Alto M-CN11S	550 cc	89-91	**VKC 3529**
Alto M-SS40V	550 cc	83-84	**VKC 3529**
Alto M-SS40V, M-SS30	550 cc	79 |->	**VKC 3509**

www.bergab.ru Берг АБ bergab@ya.ru Тел. (495)-228-06-21, факс (495) 223-3071

Alto M-SS41V	550 cc	83-84	VKC 3529
Alto M-SS80, M-SB308	800 cc	80 |->	VKC 3509
Alto SB305, SB308	550 cc, 800 cc	85 |->	VKC 3509
Cervo			
Cervo CG72V	550 cc	88-91	VKC 3529
Cervo CN21S, CN31S	660 cc	90-91	VKC 3567
Cervo CP31S	660 cc	90-91	VKC 3567
Cervo E-SS20	550 cc	77-82	VKC 3505
Cervo E-SS40	550 cc	82-88	VKC 3529
Cultus			
Cultus AA33S, AB33S	1300 cc	86-87	VKC 3567
Cultus AA34S,AA44S.AB44S,AB34S	1000 cc, 1300 cc	88-91	VKC 3623
Cultus AA53S, AB53S	1300 cc	86-87	VKC 3623
Cultus AJ14S,AF34S,AH14S	1300 cc	89-91	VKC 3564
Cultus E-AA33S,E-AB33S,E-AA53S,E-AB53S,E-AB51S,E-AA43S	1000 cc, 1300 cc	86 |->	VKC 3567
Cultus E-AA41S, E-AB41S	1000 cc	83-85	VKC 3567
Cultus E-AA43V, E-AB43S	1000 cc	86-87	VKC 3623
Cultus E-AB51S	1300 cc	84 |->	VKC 3567
Cultus/Swift E-AA41S,AA41ST,AB41S,SA310,SA413	1000 cc, 1300 cc	83 |->	VKC 3567
E-AA43S,AB43S,L-AA43V	1000 cc	87-88	VKC 3567
E-AB51S,AA33S,AB33S,AA53S,AB53S	1300 cc	85-86	VKC 3567
Escudo TA01R, TA01V, TA01W	1600 cc	88-91	VKC 3564
Fronte			
Fronte E-CB71S	550 cc	84-85	VKC 3529
Fronte E-CB72S	550 cc	84-88	VKC 3529
Fronte E-CN11S	550 cc	88-89	VKC 3529
Fronte E-CP11S	550 cc	88-89	VKC 3567
Fronte E-CP11S,M-CM11V	550 cc 4WD Gasoline	88 |->	VKC 3567
Fronte E-SS20	550 cc	77-79	VKC 3505
Fronte E-SS30	550 cc	79-84	VKC 3509
Fronte E-SS40	550 cc	83-84	VKC 3529
Fronte LC10,LC10WR	360 cc	67-76	VKC 3509
Fronte LC20..	360 cc	73-76	VKC 3505
Fronte SS80F	800 cc	81-84	VKC 3509
Fronte Van & Hatchback LS10,20,30	360 cc	69-76	VKC 3529
Fronte Van & Hatchback SH10	550 cc	76-78	VKC 3505
Jimny			
Jimny E-JA51	1300 cc 4WD Gasoline	85-86	VKC 3564
Jimny JA51C, JA51V, JA51W	1300 cc	84-91	VKC 3564
Jimny JA71C, JA71V	550 cc	86-87	VKC 3564
Jimny LJ10,LJ20	360 cc	70-76	VKC 3529
Jimny L-SJ40, L-SJ40V, L-SJ40T	1000 cc	83-84	VKC 3505
Jimny L-SJ410..	1000 cc	81 |->	VKC 3505
Jimny SJ10,SJ20	550 cc, 800 cc	76-82	VKC 3505
Jimny SJ413..	1300 cc	84 |->	VKC 3564
Mighty Boy M-SS40T	550 cc	83-86	VKC 3529
Swift			
Swift SA310	1000 cc	85 |->	VKC 3567
Swift SA310-3	1000 cc	86 |->	VKC 3567
Swift SA413	1300 cc	87 |->	VKC 3567
Swift SF413	1300 cc 4WD	90-03/96	VKC 3564
Swift SF413	1300 cc, 1300 cc DOHC(2WD)	89-90	VKC 3623
Swift SJ410	1000 cc 4WD	82-84	VKC 3505

www.bergab.ru Берг АБ bergab@ya.ru Тел. (495)-228-06-21, факс (495) 223-3071

www.bergab.ru Берг АБ bergab@ya.ru Тел. (495)-228-06-21, факс (495) 223-3071

SUZUKI .../...

Swift SJ413	1300 cc 4WD	85 |->	**VKC 3564**
Vitara			
Vitara SE416	1600 cc	90-95	**VKC 3564**

SUZUKI

ST80	800 cc	78-80	**VKC 3505**
ST90	800 cc	81-84	**VKC 3505**
Carry			
Carry/Every	550 cc	83-91	**VKC 3505**
Carry/L, ST Series	360 cc, 450 cc	69-76	**VKC 3529**
Carry/L, ST Series	550 cc	76 |->	**VKC 3505**
Carry/L, ST Series	550 cc	85 |->	**VKC 3564**
Carry/L, ST Series	550 cc	81 |->	**VKC 3509**
Every			
Every (All Models)	550 cc	83 |->	**VKC 3505**

TALBOT

Avenger			
Avenger	TT	c)	**VKC 2144**
Bagheera			
Bagheera 1.3, 1.5			**VKC 2080**
Horizon			
Horizon 1.1, 1.3, 1.4, 1.5		->| 06/82	**VKC 2080**
		07/82 |->	**VKC 2193**
Horizon 1.9 Diesel			**VKC 2193**
Murena			
Murena 1,6			**VKC 2193**
Murena 2.0			**VKC 2051**
Rancho			
Rancho 1.4		->| 06/82	**VKC 2080**
		07/82 |->	**VKC 2193**
Samba			
Samba			**VKC 2108**
Simca			
Simca 0.9		01/73-76	**VKC 2080**
Simca 1.1		01/73 |->	**VKC 2080**
Simca 1.3	G1,G2 - 1294 cc		**VKC 2080**
Simca 1.4		->| 06/81	**VKC 2080**
		07/81-82	**VKC 2193**
Simca 1.6			**VKC 2193**
Solara			
Solara 1.3, 1.5		->| 06/82	**VKC 2080**
		07/82 |->	**VKC 2193**
Tagora			
Tagora 2.2, 2.7			**VKC 2051**
Tagora 2.3 Turbo Diesel			**VKC 2169**

www.bergab.ru Берг АБ bergab@ya.ru Тел. (495)-228-06-21, факс (495) 223-3071

TALBOT

Express

Express 1.8, 2.0			VKC 2115
Express 2.5 Turbo Diesel			VKC 2115

TOYOTA

4 Runner/Blizzard

4 Runner RN10#,110#,13#,VZN10#,110#,13#;RN80,90,121, VZN85,90,95	4WD,2WD	88-90	VKC 3615
Blizzard LD10	2200 cc	80 |->	VKC 3502
Blizzard N-LD10V	2200 cc	83 |->	VKC 3524
Blizzard LD20,N-LD20,21G	2400 cc, 2400 cc 4WD Diesel	84 |->	VKC 3502

Camry

Camry SV10,20,CV10	1800 cc	82 |->	VKC 3516
Camry N-CV10	1800 cc	83-84	VKC 3516
Camry SV22	1800 cc	88-90	VKC 3516
Camry E-SV10,E-SV11,E-SV12	1800 cc, 2000 cc	83-87	VKC 3516
Camry E-SV21, E-SV20, N-CV20	1800 cc, 2000 cc	86 |->	VKC 3516
Camry E-SV20, E-SV21	1800 cc, 2000 cc	87 |->	VKC 3516
Camry E-SV30, E-SV32, E-SV33, E-CV30	1800 cc, 2000 cc	90 |->	VKC 3625
Camry N-CV11, E-SV20, E-SV11, E-SV21	2000 cc	82 |->	VKC 3516
Camry E-SV12	2000 cc	84	VKC 3502
Camry N-CV11	2000 cc	85-86	VKC 3516
Camry E-SV25	2000 cc	87-88	VKC 3584
Camry VZV20, VZV30	2000 cc	87-90	VKC 3584
Camry E-SV25	2000 cc 4WD	89 |->	VKC 3584
Camry E-VZV20, E-SV25	2000 cc, 2000 cc 4WD Gasoline	87-88	VKC 3584
Camry N-CV10, N-CV11	Diesel Turbo	84-87	VKC 3516

Carina

Carina E-AL25G	1500 cc	82-88	VKC 3502
Carina TA	1400 cc	70-72	VKC 3506
Carina TA1	1400 cc	70-75	VKC 3505
Carina L-KT147V, E-AA60, E-AT140, L-KA67V	1500 cc	81-88	VKC 3502
Carina E-AT170, E-AT170G	1500 cc	88-91	VKC 3556
Carina AA60..,KA67V, AA63:TA60,61,67V	1500 cc, 1600 cc	81 |->	VKC 3502
Carina E-AT150, E-AT151, E-AT160	1500 cc, 1600 cc FWD	84-88	VKC 3556
Carina N-CA67V,E-AA63,L-KA67V,E-AA60,E-SA60,E-SA60G	1500 cc, 1600 cc, 1800 cc	83-84	VKC 3502
Carina TA12	1600 cc	73-75	VKC 3505
Carina TA60A	1600 cc	82-83	VKC 3502
Carina E-AT151	1600 cc	84-87	VKC 3556
Carina E-AT160	1600 cc	85-88	VKC 3516
Carina E-AT175	1600 cc	88-91	VKC 3584
Carina E-AT150, E-AT151	1600 cc, 1800 cc	83-84	VKC 3556
Carina TA40,41,42,45,46,47,49, RA40,45,46,47	1600 cc, 1800 cc, 2000 cc	77-80	VKC 3502
Carina E-AT160,E-ST160,E-ST162,N-CT150	1600 cc, 1800 cc, 2000 cc	85-86	VKC 3516
Carina CA67V, SA60, SA60G	1800 cc	82-88	VKC 3502
Carina E-ST150/160, E-ST163	1800 cc	83-88	VKC 3516
Carina N-CT147V,N-CA67V,E-ST140,SA60	1800 cc	85-86	VKC 3502
Carina E-ST170, E-ST170G	1800 cc	88-91	VKC 3516
Carina RA10,11,13,14,15,16,17,30,31	1800 cc, 2000 cc	74-77	VKC 3506
Carina RA40, RA47	1800 cc, 2000 cc	77-80	VKC 3502
Carina RA45, RA46	1800 cc, 2000 cc	77-81	VKC 3502
Carina ST150,ST160,ST162,CT150	1800 cc, 2000 cc - FWD, Diesel	84-87	VKC 3516

TOYOTA .../...

Carina TA62,63,67:SA60..,CA60,CA67V,RA63	1800 cc, 2000 cc - RWD	81 |->	**VKC 3502**
Carina CT150, CT170, CT170G, CT176V	2000 cc	84-91	**VKC 3516**
Celica			
Celica TA20	1400 cc	70-75	**VKC 3505**
Celica E-AA60, AA63, E-SA60, E-SA60G	1500 cc, 1600 cc, 1800 cc	83-84	**VKC 3502**
Celica TA40B	1600 cc	78-80	**VKC 3502**
Celica AA63	1600 cc	83-85	**VKC 3502**
Celica AT160	1600 cc	86 |->	**VKC 3556**
Celica AT160,ST160	1600 cc, 1800 cc	85-87	**VKC 3516**
Celica E-AT160,E-ST160,ST162,E-ST160,E-ST162,E-AT160	1600 cc, 1800 cc, 2000 cc	85-86	**VKC 3516**
Celica TA60B,RA60B	1600 cc, 2000 cc	82-83	**VKC 3502**
Celica ST180,181, ST182,183	1800 cc, 2000 cc	90 |->	**VKC 3625**
Celica E-GA61, E-MA61,63, E-TA63	1800 cc, 2000 cc, 2800 cc	83-84	**VKC 3502**
Celica RA40B	2000 cc	78-80	**VKC 3502**
Celica RA40B	2000 cc	81 |->	**VKC 3502**
Celica RA61B	2000 cc	84-85	**VKC 3502**
Celica ST162, ST162C	2000 cc	85-89	**VKC 3516**
Celica ST165	2000 cc	86-87	**VKC 3584**
Celica ST182, ST183	2000 cc	89-91	**VKC 3516**
Celica ST165	2000 cc 4WD Diesel	85-86	**VKC 3584**
Celica ST182	2000 cc DOHC	90 |->	**VKC 3625**
Celica ST165	2000 cc DOHC Turbo 4WD	88-89	**VKC 3584**
Celica ST185	2000 cc DOHC Turbo 4WD	89-92	**VKC 3584**
Celica GT AT160	1600 cc	85 |->	**VKC 3556**
Celica GT TA42,46,47	1800 cc	77-81	**VKC 3502**
Celica GT TA63..,64,SA60,61	1800 cc	81-83	**VKC 3502**
Cellica GT E-ST185	2000 cc	89 |->	**VKC 3584**
Celica GT, GTR, GTV, SE, ST, XT RA40/5/6/55/60/61/3	2000 cc	77-82	**VKC 3502**
Celica GT, GTV, GTR TA40,41,45,45,60,61	1600 cc	77-83	**VKC 3502**
Celica GT, GTV, LT, ST TA22,23,25,27,28,35	1600 cc	70-77	**VKC 3505**
Celica GT, GTV, LT, ST RA21,23,25,28,35	2000 cc	73-77	**VKC 3506**
Celica ST, SV, SX ST160	1800 cc	85 |->	**VKC 3516**
Celica /Supra MA45 , GA61, 70	2000 cc	80-81	**VKC 3502**
Celica /Supra ST162	2000 cc	85-86	**VKC 3516**
Celica /Supra MA45, MA46	2000 cc, 2600 cc	80-81	**VKC 3502**
Celica /Supra E-GA61,E-MA61,63, E-TA63	2000 cc, 2800 cc	83-85	**VKC 3502**
Celica/Supra MA50,55,56,61,63 MA46, MA61B	2800 cc	78-85	**VKC 3502**
Celica /Supra	3000 cc Turbo		**VKC 3614**
Chaser			
Chaser TX60, YX70	1800 cc	80 |->	**VKC 3502**
Chaser TX40	1800 cc	80-82	**VKC 3502**
Chaser E-SX70	1800 cc	80-88	**VKC 3502**
Chaser E-SX70Y	1800 cc	84-88	**VKC 3502**
Chaser E-SX80, E-SX80Y	1800 cc	88-90	**VKC 3615**
Chaser TX30,40, RX30,31,40,41:MX30,40,41	1800 cc, 2000 cc	77-80	**VKC 3502**
Chaser GX60,61,71:RX40,41,60,63:LX60,LX70:MX40,41,61	2000 cc	80 |->	**VKC 3502**
Chaser E-GX61, E-MX61	2000 cc	83 |->	**VKC 3502**
Chaser GX71	2000 cc	84-88	**VKC 3502**
Chaser YX72Y	2000 cc	86-88	**VKC 3502**
Chaser GX81	2000 cc	88-90	**VKC 3616**
Chaser E-GX60G,GX71,E-MX71;N-LX70	2000 cc, 2400 cc	84 |->	**VKC 3502**
Chaser E-GX60,N-LX60,E-SX60	1800 cc, 2000 cc, 2400 cc	83 |->	**VKC 3502**

Chaser N-LX60	2200 cc	80-84	**VKC 3502**
Chaser N-LX65	2400 cc	83 |->	**VKC 3502**
Chaser LX70, LX70Y	2400 cc	84-87	**VKC 3502**
Chaser LX80, LX80Y	2400 cc	88-90	**VKC 3615**
Corolla			
Corolla KE26V	1200 cc	70-77	**VKC 3504**
Corolla KE30,35	1200 cc	74-76	**VKC 3504**
Corolla KE16V,KE20,25,26	1200 cc /GBX:4	70-74	**VKC 3503**
Corolla KE50	1200 cc /GBX:4	76-77	**VKC 3504**
Corolla KE16V,KE20,25,3.,4.,50,60	1200 cc /GBX:5	73-76	**VKC 3505**
Corolla KE3.,4.,5.,6.,70/E,KE72V, KE73G, L-KE72V	1200 cc, 1300 cc	74-87	**VKC 3503**
Corolla AE80E, E-EE80, E-EE80E,EL30, R-EE96V	1300 cc	85-87	**VKC 3556**
Corolla AL20.21	1300 cc, 1500 cc	82 |->	**VKC 3502**
Corolla E-AL20, E-AL21	1300 cc, 1500 cc	83-86	**VKC 3502**
Corolla L-KE30,L-KE72V	1300 cc, 1500 cc	85-86	**VKC 3503**
Corolla E-EL30;E-EL31,N-NL31	1300 cc, 1500 cc	86 |->	**VKC 3556**
Corolla EE96V, EE97G;EE98V	1300 cc, 1500 cc	87-90	**VKC 3556**
Corolla EE110,EE111	1500 cc, 1600 cc	95 I->	**VKC 3556**
Corolla AE110,AE111	1300 cc	95 I->	**VKC 3622**
Corolla EL41;EL43,EL45,NL40	1300 cc, 1500 cc	90 |->	**VKC 3556**
Corolla E-AE80,E-AE81	1300 cc, 1500 cc, 1600 cc	83-84	**VKC 3556**
Corolla EE90, AE92, AE97	1300 cc, 1600 cc	87-90	**VKC 3556**
Corolla TE2.,3.,4.,5.,6.	1400 cc	70-77	**VKC 3505**
Corolla TE5.,6.,TE36V	1400 cc	77-79	**VKC 3502**
Corolla L-KE74V	1500 cc	83-84	**VKC 3502**
Corolla KE74V	1500 cc	83-87	**VKC 3502**
Corolla E-AE85	1500 cc	83-87	**VKC 3503**
Corolla E-AE80	1500 cc	85-86	**VKC 3556**
Corolla EL31, NL30	1500 cc	86-90	**VKC 3556**
Corolla AE91, AE91G	1500 cc	87-90	**VKC 3556**
Corolla E-AE81, E-AE82	1500 cc, 1600 cc	83-87	**VKC 3556**
Corolla TE37,47,51,61	1600 cc	74-77	**VKC 3505**
Corolla TE51,55,61,65,71	1600 cc	77-80	**VKC 3502**
Corolla TE71E	1600 cc	80-83	**VKC 3502**
Corolla E-AE86, E-AE86E	1600 cc	83-87	**VKC 3502**
Corolla AE82E	1600 cc	83-87	**VKC 3556**
Corolla AE95	1600 cc 4WD	88 |->	**VKC 3584**
Corolla N-CE71V, N-CE72G	1800 cc	82-87	**VKC 3502**
Corolla N-CE80	1800 cc	83-87	**VKC 3516**
Corolla N-CE90	1800 cc	87-90	**VKC 3516**
Corolla N-CE90, N-CE96V, N-CE97G	1800 cc	90 |->	**VKC 3625**
Corolla N-CE72G,L-KE74V	1300 cc, 1500 cc, 1800 cc	85-86	**VKC 3502**
Corolla N-CE96V, N-CE97G	1800 cc	87-90	**VKC 3516**
Corolla N-CE95	2000 cc	89-90	**VKC 3584**
Corolla N-CE80E	Diesel	83-87	**VKC 3516**
Corolla Levin E-AE85	1500 cc	83-86	**VKC 3503**
Corolla Levin E-AE86	1600 cc	83-86	**VKC 3502**
Corolla/Sprinter EE80	1300 cc	85 |->	**VKC 3556**
Corolla/Sprinter AE80, AE81, AE82	1300 cc, 1500 cc, 1600 cc	83-85	**VKC 3556**
Corolla/Sprinter E-AE70	1500 cc	79-83	**VKC 3503**
Corolla/Sprinter KE47V, 47E, 74	1500 cc	83 |->	**VKC 3502**
Corolla/Sprinter E-AE91	1500 cc	87-88	**VKC 3556**
Corolla/Sprinter TE73V,74V	1600 cc	78-83	**VKC 3502**
Corolla/Sprinter TE71	1600 cc	80-83	**VKC 3502**
Corolla/Sprinter E-AE95	1600 cc	87-88	**VKC 3584**

TOYOTA .../...

Corolla/Sprinter TE70, 72	1800 cc	79-83	**VKC 3502**
Corolla/Sprinter CE70,71	1800 cc	80-83	**VKC 3502**
Corolla/Sprinter CE80	1800 cc	83 |->	**VKC 3516**
Corolla/Sprinter N-CE72, N-CE71V	1800 cc	85-86	**VKC 3502**
Corolla/Sprinter 4DS LX,SEL E-AE100, E-AE101		91 |->	**VKC 3622**
Corolla/Sprinter (Levin & Trueno) E-AE85	1500 cc	85 |->	**VKC 3503**
Corolla/Sprinter (Levin & Trueno) E-AE86	1600 cc	83 |->	**VKC 3502**
Corolla/Sprinter (Levin & Trueno) E-AE92	1600 cc	87-88	**VKC 3584**

Corona

Corona RT80,90	1500 cc	70-73	**VKC 3506**
Corona L-KT147V, AT140	1500 cc	81-87	**VKC 3502**
Corona AT150	1500 cc	83-87	**VKC 3556**
Corona E-AA60, E-AT140 ,L-KA67V	1500 cc	85-86	**VKC 3502**
Corona AT150	1500 cc FWD	83 |->	**VKC 3556**
Corona E-AT150, E-AT151, AT150	1500 cc, 1600 cc FWD	83-86	**VKC 3556**
Corona RT100,106,110,116,87VK:TT100,106..,110	1600 cc	71-77	**VKC 3506**
Corona RT120:TT120	1600 cc	76-77	**VKC 3506**
Corona RT120:TT120,125	1600 cc	77-78	**VKC 3502**
Corona RT130,AT141:TT130,133,137..,138..,140,147V	1600 cc	80 |->	**VKC 3502**
Corona E-AT175	1600 cc	88 |->	**VKC 3584**
Corona E-AT177	1600 cc	88 |->	**VKC 3556**
Corona AT151,160	1600 cc FWD	83-87	**VKC 3556**
Corona TT133, TT132	1600 cc, 1800 cc	79-80	**VKC 3502**
Corona TT133, TT132	1600 cc, 1800 cc	81 |->	**VKC 3502**
Corona E-AT150, E-AT151	1600 cc, 1800 cc	83-84	**VKC 3556**
Corona RT100,RT102, RT104	1600 cc, 1800 cc, 2000 cc	73-77	**VKC 3506**
Corona RT100,RT102, RT104	1600 cc, 1800 cc, 2000 cc	78-79	**VKC 3502**
Corona TT140, TT141, CT140	1600 cc, 1800 cc, Diesel	82-83	**VKC 3502**
Corona RT122, RT106:TT106..,RT104,114,118	1600 cc, 2000 cc	77-78	**VKC 3502**
Corona RT130,TT130,133,137..,138..,140, RT131,132,133,141	1600 cc, 2000 cc	78-80	**VKC 3502**
Corona RT130, RT132	1600 cc, 2000 cc	79-82	**VKC 3502**
Corona AT171, ST171, AT177	1600 cc, 2000 cc	88 |->	**VKC 3556**
Corona E-AT160,E-ST160,E-ST162,N-CT150	1600 cc, 1800 cc, 2000 cc	85-86	**VKC 3516**
Corona RT84,94K	1700 cc	73-77	**VKC 3506**
Corona RT102,112,117,137:TT120	1800 cc	73-77	**VKC 3506**
Corona TT120,121,126,131,132:RT137	1800 cc	77-80	**VKC 3502**
Corona TT131,132,141,142:ST140:CT140,147:RT137	1800 cc	80 |->	**VKC 3502**
Corona N-CT147V, ST140	1800 cc	82-87	**VKC 3502**
Corona E-TA63G,N-CT147V,E-TT142	1800 cc	83-84	**VKC 3502**
Corona E-CT150,E-ST150	1800 cc	83-84	**VKC 3516**
Corona L-YT140	1800 cc	85-86	**VKC 3502**
Corona E-ST140, E-SA60	1800 cc	85-86	**VKC 3502**
Corona N-CA67V	1800 cc	85-86	**VKC 3502**
Corona ST150,160	1800 cc FWD	83 |->	**VKC 3516**
Corona N-CT141,L-YT140,E-ST140,SA60	1800 cc, 2000 cc	85-86	**VKC 3502**
Corona E-ST170,171, CT170, CT176V	1800 cc, 2000 cc	90 |->	**VKC 3625**
Corona RT122	2000 cc	76-77	**VKC 3506**
Corona RT131,132,133,141	2000 cc	80-82	**VKC 3502**
Corona N-CT141	2000 cc	85-91	**VKC 3502**
Corona E-ST151	2000 cc	86-87	**VKC 3516**
Corona N-CT170	2000 cc	87-89	**VKC 3516**
Corona N-CT150,ST151	2000 cc FWD	83 |->	**VKC 3516**
Corona E-ST162	2000 cc FWD	85-86	**VKC 3516**

Corona E-ST162	2000 cc FWD	86 |->	**VKC 3516**
Corona N-CT176V,ST170	1800 cc, 2000 cc	87-91	**VKC 3516**
Corona N-CT170, CT177	Diesel	88 |->	**VKC 3516**
Corona MK.II/Cressida	1800 cc	80-82	**VKC 3502**
Corona MK.II/Cressida E-SX70, YX76V, SX60/70	1800 cc	82-88	**VKC 3502**
Corona MK.II/Cressida E-SX80, SX80Y	1800 cc	88-90	**VKC 3615**
Corona MKII/Cressida RX10,11,17,21,27, RX12,15,22, 28:MX10,20,27	1800 cc, 2000 cc	72-76	**VKC 3506**
Corona MKII/Cressida E-SX/E-GX60,E-GX61,E-MX61,N-LX65/60	1800 cc, 2000 cc, 2400 cc	83 |->	**VKC 3502**
Corona MKII/Cressida SX70,SX70Y;GX71;LX70,LX76V	1800 cc, 2000 cc, 2400 cc	84-88	**VKC 3502**
Corona MKII/Cressida L-TX67V,N-LX67V	1800 cc, 2200 cc	83-84	**VKC 3502**
Corona MKII/Cressida E-SX80,S-LX76V	1800 cc, 2400 cc	88 |->	**VKC 3615**
Corona MKII/Cressida RX37:TX30,40,47, MX33,43	1800 cc, 2600 cc	76-80	**VKC 3502**
Corona MKII/Cressida RX30,31,35,40,41,45:MX30,31,35,40,41,45	2000 cc	76-80	**VKC 3502**
Corona MK.II/Cressida GX71, E-GX70G, L-YX76V, YX72/Y	2000 cc	84-88	**VKC 3502**
Corona MK.II/Cressida YX80, YX80Y, E-GX70G	2000 cc	88-91	**VKC 3616**
Corona MK.II/Cressida GX70, LX70,76	2000 cc, 2400 cc	84 |->	**VKC 3502**
Corona MK.II/Cressida	2000 cc, 2200 cc	80-84	**VKC 3502**
Corona MK.II/Cressida	2000 cc, 2400 cc	84 |->	**VKC 3502**
Corona MK.II/Cressida LX40, MX12,22,28,33,43,63,N-LX70/76V	2200 cc, 2300 cc, 2400 cc, 2600 cc, 2800 cc	72-86	**VKC 3502**
Corona,Carina II AT151	1600 cc	84-87	**VKC 3556**
Corona,Carina II N-CT150, ST150	1800 cc Diesel	84-87	**VKC 3516**
Corsa			
Corsa EL30, EL31	1300 cc	86-88	**VKC 3556**
Corsa E-AL20, E-AL21, E-AL25	1300 cc, 1500 cc	82-89	**VKC 3502**
Corsa E-EL30, E-EL31, E-NL31	1300 cc, 1500 cc	86 |->	**VKC 3556**
Corsa E-EL41, E-EL43, E-EL45, E-NL40	1300 cc, 1500 cc	90 |->	**VKC 3556**
Corsa E-AL10, E-AL12	1500 cc	78-82	**VKC 3502**
Corsa E-NL30, E-EL31	1500 cc	86-90	**VKC 3556**
Cressida			
Cressida RX30, RX60X,GX60X, RX70, RX71	2000 cc	77-88	**VKC 3502**
Cressida GX81,MX81	2000 cc, 2800 cc	89 |->	**VKC 3616**
Cressida RX72, RX73	2400 cc	85-88	**VKC 3502**
Cressida RX80, RX81, LX80	2400 cc Diesel	89 |->	**VKC 3615**
Cressida LX70,MX73,GX71	2000 cc, 2800 cc Diesel	85-88	**VKC 3502**
Cresta			
Cresta E-SX70, E-SX70Y, E-GX71	1800 cc, 2000 cc	84-88	**VKC 3502**
Cresta GX50,51,61,71:LX60,70:SX70,TX50	1800 cc, 2000 cc, 2200 cc, 2400 cc	80 |->	**VKC 3502**
Cresta E-SX60,E-GX61,E-MX61,N-LX65,N-LX60,E-GX60	1800 cc, 2000 cc, 2400 cc	83 |->	**VKC 3502**
Cresta SX80, SX80Y; LX80, LX80Y	1800 cc, 2400 cc	88-90	**VKC 3615**
Cresta GX81	2000 cc	88-90	**VKC 3616**
Cresta E-GX60G, E-GX71, E-MX71, E-SX70, E/N-LX70	1800 cc, 2000 cc, 2400 cc	84-87	**VKC 3502**
Crown			
Crown GS131, MS132, MS133, YS13		89 |->	**VKC 3616**
Crown RS60:MS60,62,66,70	2000 cc	71-76	**VKC 3506**
Crown RS80,100:MS80,82,87,90	2000 cc	71-79	**VKC 3506**
Crown RS90,105,110:MS100,102,105,107,110..,117..	2000 cc	77-80	**VKC 3502**
Crown MS110,MS117,MS110,MS120:GS110,117,120,121,RS110, YS120	2000 cc	80 |->	**VKC 3502**
Crown E-GS120/G,121,126V, E-MS120,MS/YS130	2000 cc	83-89	**VKC 3502**
Crown L-GS126V, E-GS120G	2000 cc	85-86	**VKC 3502**
Crown E-GS130,130G,131,131H,136V, LS130G	2000 cc	87-91	**VKC 3616**

TOYOTA .../...

Crown E-MS120,E-GS120,E-GS120G,L-GS126V;N-LS120, N-LS126V	2000 cc, 2400 cc	83-84	**VKC 3502**
Crown RS80, MS85	2000 cc, 2600 cc	75-76	**VKC 3506**
Crown RS110, MS111, MS112, LS110, RS80,MS85	2000 cc, 2600 cc, 2800 cc & Diesel	77-83	**VKC 3502**
Crown YS120, MS122, MS123, LS120	2000 cc, 2400 cc, 2800 cc & Diesel	84-87	**VKC 3502**
Crown LS100,110..,117..	2200 cc	77-83	**VKC 3502**
Crown MS64	2300 cc	67-71	**VKC 3505**
Crown LS111,120,120G,N-LS120/G/126V	2400 cc	82-87	**VKC 3502**
Crown LS130, LS136V	2400 cc	87-89	**VKC 3615**
Crown LS131	2400 cc	89-91	**VKC 3626**
Crown S-LS236V	2400 cc Diesel	87-88	**VKC 3615**
Crown E-MS63,65,68,75,83,85,88,95,101,106	2600 cc	71-76	**VKC 3506**
Crown E-MS83,85,88,95,101,106	2600 cc	76-79	**VKC 3502**
Crown E-MS111/112, MS122/123/125	2600 cc, 2800 cc, 3000 cc	79-87	**VKC 3502**
Crown LS130	Diesel	88 |->	**VKC 3615**

Landcruiser

Landcruiser fzj80		92	**VKC 3649**
Landcruiser N-LJ71G,Q-LJ71G	2400 cc	85-91	**VKC 3502**
Landcruiser RJ70, LJ70	2400 cc & Diesel	84-88	**VKC 3502**
Landcruiser RJ70, LJ70	2400 cc & Diesel	89 |->	**VKC 3615**
Landcruiser P-BJ40,43,45	3000 cc	74-80	**VKC 3513**
Landcruiser P-BJ40,42,43,45,46,60,61,61V,73V,75	3400 cc	80-86	**VKC 3523**
Landcruiser P-BJ70, BJ70V	3400 cc	80-87	**VKC 3523**
Landcruiser N-BJ46V, N-HJ60V	3400 cc	83-84	**VKC 3523**
Landcruiser P-BJ73, P-BJ61	3400 cc	85-86	**VKC 3523**
Landcruiser P-BJ71, P-BJ74	3400 cc	85-88	**VKC 3548**
Landcruiser P-BJ71V	3400 cc	85-90	**VKC 3548**
Landcruiser HJ45	3600 cc	72-80	**VKC 3513**
Landcruiser FJ40,43,45,55V	3900 cc	69-74	**VKC 3513**
Landcruiser FJ40,43,45,55V	3900 cc	74-79	**VKC 3575**
Landcruiser P-HJ60, P-HJ61	4000 cc	85-86	**VKC 3575**
Landcruiser FJ62	4000 cc	85-87	**VKC 3575**
Landcruiser P-HJ60V, P-HJ61V	4000 cc	85-90	**VKC 3575**
Landcruiser FJ62;FJ70,73,75,HJ75	4000 cc Diesel	85-87	**VKC 3575**
Landcruiser FJ70,73,75, HJ75	4000 cc Diesel	88 |->	**VKC 3548**
Landcruiser 40,60,75,FJ40,43,45,55,56,60,61,62V,65,70,73, 75:HJ40,43,45	4000 cc, 4200 cc	75 |->	**VKC 3575**
Landcruiser N-BJ46V, N-HJ60V; M-FJ61V	4000 cc, 4230 cc	83-84	**VKC 3575**
Landcruiser HZJ80	4200 cc		**VKC 3645**
Landcruiser HD380	4200 cc Turbo Diesel		**VKC 3645**
Landcruiser HZJ18V	4200 cc	90	**VKC 3645**
Landcruiser FJ40,43,45,55	4200 cc	75-80	**VKC 3575**
Landcruiser HDJ80	4200 cc	90 |->	**VKC 3627**
Landcruiser HZJ70,73,75	4200 cc	90 |->	**VKC 3627**
Landcruiser HDJ81V	4200 cc	90-90	**VKC 3627**
Landcruiser FJ40,45,60, HJ47,60	4200 cc & Diesel	81-85	**VKC 3575**
Landcruiser FJ56,56V	4300 cc	75-80	**VKC 3575**
Landcruiser FJ60,60V	4300 cc	80 |->	**VKC 3575**
Landcruiser BJ40,42,45,60	Diesel	81-84	**VKC 3523**
Landcruiser BJ70,73,75	Diesel	85 |->	**VKC 3523**
Landcruiser BJ73	Diesel	85 |->	**VKC 3575**
Landcruiser BJ71	Diesel Turbo	86 |->	**VKC 3548**
Landcruiser PZJ70, PZJ73, PZJ75	3500 cc Diesel	1/90-8/92	**VKC 3665**

MR2			
MR2 - Super Charger AW11	1600 cc	86 |->	**VKC 3584**
MR2 AW10, AW11	1500 cc, 1600 cc	84 |->	**VKC 3556**
MR2 E-AW10, E-AW11	1500 cc, 1600 cc	84-90	**VKC 3584**
MR2 SW20	2000 cc	90-91	**VKC 3516**
Paseo			
Paseo EL44, EL54	1300 cc, 1500 cc	91-95	**VKC 3556**
Previa			
Previa	2500 cc	90-93	**VKC 3616**
Publica / Soarer			
Publica KP30,31,36..	1000 cc, 1200 cc	69-74	**VKC 3503**
Publica KP31,36,36V	1000 cc, 1200 cc	69-76	**VKC 3504**
Publica KP30,31,36..,37	1000 cc, 1200 cc	74-78	**VKC 3503**
Publica KP37,37V, KP50, KP38	1200 cc	69-79	**VKC 3504**
Publica UP30,36	800 cc	69-71	**VKC 3528**
Soarer GZ20	2000 cc	86-91	**VKC 3616**
Soarer E-GZ10, E-GZ20, E-MZ10/11, E-MZ11/12/20	2000 cc, 2800 cc, 3000 cc	81-86	**VKC 3502**
RAV-4			
RAV-4 SXA10, SXA11	2000 cc	95 |->	**VKC 3584**
Sprinter			
Sprinter KE40,45, KE60	1200 cc /GBX:4	74-78	**VKC 3504**
Sprinter E-EE80	1300 cc, 1500 cc	85-90	**VKC 3556**
Sprinter E-EE90	1300 cc	87-89	**VKC 3556**
Sprinter E-EE96V, E-EE98V	1300 cc, 1500 cc	88-90	**VKC 3556**
Sprinter E-AE85	1500 cc	83-87	**VKC 3503**
Sprinter E-AE80	1500 cc	85-86	**VKC 3556**
Sprinter E-AE91	1500 cc	87-90	**VKC 3556**
Sprinter E-AE81	1500 cc, 1600 cc	83-87	**VKC 3556**
Sprinter E-AE82	1500 cc, 1600 cc	83-87	**VKC 3556**
Sprinter E-AE86	1600 cc	83-87	**VKC 3502**
Sprinter E-AE92	1600 cc	87-89	**VKC 3584**
Sprinter E-AE95	1600 cc	87-90	**VKC 3584**
Sprinter N-CE80	1800 cc	83-87	**VKC 3516**
Sprinter N-CE90	1800 cc	87-90	**VKC 3516**
Sprinter N-CE96V	1800 cc	88-90	**VKC 3516**
Sprinter N-CE95	2000 cc	89-90	**VKC 3584**
Sprinter Carib	1500 cc	82 |->	**VKC 3502**
Sprinter Trueno	1500 cc	83-86	**VKC 3503**
Sprinter Trueno	1600 cc	83-86	**VKC 3502**
Starlet			
Starlet KP36	1000 cc	70-74	**VKC 3503**
Starlet	1000 cc	74 |->	**VKC 3503**
Starlet EP70	1000 cc	85	**VKC 3556**
Starlet KP40,42,45,47	1000 cc, 1200 cc /GBX:4 RWD	74-76	**VKC 3503**
Starlet KP60..,61..,62	1000 cc, 1200 cc, 1300 cc RWD	78-84	**VKC 3503**
Starlet EP80,WP80,EP81	1000 cc, Diesel, 1300 cc	90 |->	**VKC 3556**
Starlet KP62V	1200 cc	78 |->	**VKC 3504**
Starlet KP51	1200 cc /GBX:4	76-78	**VKC 3504**
Starlet KP47,KP45	1200 cc /GBX:4,1000	73-76	**VKC 3504**
Starlet KP42,47,51	1200 cc /GBX:5 RWD	73-76	**VKC 3505**
Starlet E-KP61, L-KP61V	1300 cc	83-84	**VKC 3503**
Starlet EP71, EP76V	1300 cc	84-89	**VKC 3556**

www.bergab.ru Берг АБ bergab@ya.ru Тел. (495)-228-06-21, факс (495) 223-3071

TOYOTA .../...

Starlet EP85	1300 cc	90 |->	**VKC 3556**
Starlet EP71,71(EFI),76V	1300 cc FWD	84-86	**VKC 3556**
Starlet EP71,71(EFI),76V	1300 cc FWD	86 |->	**VKC 3556**
Starlet EP82,NP80	1300 cc ,1500 cc	89-90	**VKC 3556**
Starlet N-NP70, N-NP76V	1500 cc	85-89	**VKC 3556**
Supra			
Supra GA70, GA70H	2000 cc	86-90	**VKC 3616**
Supra MA70	2000 cc DOHC	86-88	**VKC 3502**
Supra MA70	2000 cc DOHC	08/88-90	**VKC 3640**
Supra MA70	2000 cc DOHC Turbo	88 |->	**VKC 3614**
Supra E-GA70,E-MA70	2000 cc, 3000 cc	86 |->	**VKC 3502**
Supra JZA70	2500 cc	90 |->	**VKC 3614**
Supra M70	Twin Cam Turbo With EFI	86-90	**VKC 3614**
Tercel			
Tercel E-EL30, E-EL31	1300 cc	86-88	**VKC 3556**
Tercel E-AL11, E-AL25Z	1300 cc, 1500 cc	79-86	**VKC 3502**
Tercel E-AL20, E-AL21	1300 cc, 1500 cc	79-89	**VKC 3502**
Tercel E-EL30, N-EL31, N-NL31	1300 cc, 1500 cc	86 |->	**VKC 3556**
Tercel E-EL41, E-EL43, E-EL45, N-NL40	1300 cc, 1500 cc	90 |->	**VKC 3556**
Tercel E-AL25G	1500 cc	82 |->	**VKC 3502**
Tercel E-AL25	1500 cc	84-89	**VKC 3502**
Tercel E-AL21	1500 cc	85-86	**VKC 3502**
Tercel N-NL30	1500 cc	86-90	**VKC 3556**
Vista			
Vista N-CV10	1800 cc	83-84	**VKC 3516**
Vista E-SV22	1800 cc	88-90	**VKC 3516**
Vista E-SV10,11,12, SV21, N-CV20, N-CV11	1800 cc, 2000 cc	83-88	**VKC 3516**
Vista N-CV20	2000 cc	86-90	**VKC 3516**
Vista N-CV30, E-SV30	2000 cc	90 |->	**VKC 3625**

TOYOTA

Toyota 1000			
1000 Pickup KP30, 36V, KP37	1000 cc	69-79	**VKC 3503**
1000 Pickup KP36, 37	1000 cc	74-79	**VKC 3503**
BUV/Tamaro/Kijang			
BUV/Tamaro/Kijang Pick Up KF10	1200 cc	76-80	**VKC 3506**
BUV/Tamaro/Kijang Pick Up KF20, RF30, LF20,30	1300 cc, 1600 cc, 2200 cc	81 |->	**VKC 3502**
Coaster			
Coaster N-HB30, N-HB36V		83-84	**VKC 3575**
Coaster N-HB30, N-HB36V		84-86	**VKC 3548**
Coaster N-BB21, N-26V, N-36V		85-86	**VKC 3523**
Coaster N-HB31		85-86	**VKC 3548**
Coaster HZB30,HZB31,HZB36V		90	**VKC 3646**
Coaster HDB30,HDB31		90	**VKC 3646**
Coaster HZB50		93 |->	**VKC 3647**
Coaster RU18	2000 cc	72 |->	**VKC 3543**
Coaster RU18	2000 cc	72 |->	**VKC 3548**
Coaster RU19	2000 cc	77 |->	**VKC 3520**
Coaster RB10,11,12	2000 cc, 2200 cc	77-80	**VKC 3502**
Coaster RB13,20	2400 cc	80-90	**VKC 3502**

www.bergab.ru Берг АБ bergab@ya.ru Тел. (495)-228-06-21, факс (495) 223-3071

Coaster RB26V	2400 cc	84-90	**VKC 3502**
Coaster BU19	3000 cc	72-77	**VKC 3513**
Coaster BB10,11,20,21,30,31:BU32	3200 cc, 3400 cc	77 |->	**VKC 3523**
Coaster BB21	3400 cc	08/84 |->	**VKC 3648**
Coaster BB25V,BB36V,B3B	3400 cc	08/84 |->	**VKC 3648**
Coaster BB31, BB36V	3400 cc	84-88	**VKC 3523**
Coaster BB23,24	3700 cc	10/89 |->	**VKC 3643**
Coaster HB30	4000 cc	82 |->	**VKC 3575**
Coaster HB30,31,32, HB36V	4000 cc	82-90	**VKC 3548**
Coaster HB36V, HB30,31,32	4000 cc - /GBX:5	85-91	**VKC 3548**
Coaster FB30, HB30	4000 cc & Diesel	87 |->	**VKC 3548**
Coaster BB10, BB20	Diesel	78-86	**VKC 3523**
Dyna			
Dyna YY50,YH80	1600 cc	85 |->	**VKC 3502**
Dyna M-YY50,M-YY52/61,N-LY50, N-LY60;YU60,61,70, 80;M-YU61	1.25, 1, 5t; 1800 cc; 2.0t	85-86	**VKC 3502**
Dyna RU10,12,15	2000 cc	72-77	**VKC 3520**
Dyna RU20, RU25, RU30, RU35	2000 cc	77-84	**VKC 3502**
Dyna YU60	2000 cc	84-87	**VKC 3502**
Dyna RU22,32,2..,3..:YU60,61,70,80:YY52,61:LY50,60	2000 cc, 2400 cc	80 |->	**VKC 3502**
Dyna RU10,12,15;JU10,12,15	2000 cc, 2500 cc	70-72	**VKC 3543**
Dyna YU62,63,71,81	2200 cc	87 |->	**VKC 3502**
Dyna LY50,YY61	2200 cc, 2400 cc	87-91	**VKC 3615**
Dyna JU10,12,15	2500 cc	72-75	**VKC 3513**
Dyna JU10,12,15,20	2500 cc	75-80	**VKC 3506**
Dyna LY51	2800 cc	88-91	**VKC 3615**
Dyna BU60,BU70V,BU70VH,BU80,BU61,BU81,BU83,BU84	3000 cc	02/90 |->	**VKC 3643**
Dyna N-BU22, N-BU60/61/70/23, P-BU62/64/85	2.0 - 3.0t	83-86	**VKC 3523**
Dyna M-YU60, N-YU70, M-RU22	2.0t	83-86	**VKC 3502**
Dyna BU10, BU12, BU15	3000 cc	72-77	**VKC 3513**
Dyna BU20, BU25, BU30, BU35	3000 cc	77-81	**VKC 3523**
Dyna BU83, BU84	3000 cc	88-90	**VKC 3548**
Dyna BU2.,3.,4.,5.,6.,7.,8.:BU31	3000 cc, 3200 cc	81-85	**VKC 3523**
Dyna BU60, BU61; BU62, BU62D	3000 cc, 3400 cc	84-87	**VKC 3523**
Dyna BU2.,3.,4.,5.,6.,7.,8.:BU62,64,70,82,93	3400 cc	80 |->	**VKC 3523**
Dyna BU85	3400 cc	84-88	**VKC 3523**
Dyna BU85,90,95	3400 cc Turbo	84 |->	**VKC 3548**
Dyna HU15,30	3600 cc	69-80	**VKC 3538**
Dyna BU66D,BU66H,BU67D,BU78,BU87V,BU88,BU91,BU96, NU94	3700 cc	02/90 |->	**VKC 3643**
Dyna BU78,87,87V,91,96,BU66,66D,78,87,87V,91,96	3700 cc	88-91	**VKC 3548**
Dyna BU72D,BU72DH,BU72H	3700 cc	10/89 |->	**VKC 3642**
Dyna BU73,BU74	3700 cc	10/89 |->	**VKC 3642**
Dyna N-BU90,95,93,98	3.0 - 3.5t	85-86	**VKC 3548**
Dyna P-WU75,90,95	3.0 - 3.5t	85-86	**VKC 3575**
Dyna P-WU75D	3.5t	84 |->	**VKC 3575**
Dyna P-BU95	3.5t	84 |->	**VKC 3548**
Dyna P-WU26D, P-WU50	3.5, 3.75t	83-84	**VKC 3575**
Dyna WU26,40,50,70,75,90,95	4000 cc	82 |->	**VKC 3575**
Dyna HU30	Diesel	78-81	**VKC 3538**
Dyna BU20,30	Diesel	78-84	**VKC 3523**
Dyna BU31	Diesel	81-82	**VKC 3523**
Dyna BU32	Diesel	81-84	**VKC 3523**
Dyna HU40,50	Diesel	82-84	**VKC 3575**
Dyna BU60, BU61, BU63, BU80, BU81	Diesel	85 |->	**VKC 3523**

TOYOTA .../...

Dyna 100 YH80	1600 cc	86-87	**VKC 3502**
Dyna 100 YH81	1800 cc	89 |->	**VKC 3616**
Dyna 100 LH81, YH81	1800 cc Diesel	86-88	**VKC 3502**
Dyna 100 LH80	1800 cc Diesel	89 |->	**VKC 3615**
Dyna 150 YY51, YY60	1800 cc	86-87	**VKC 3502**
Dyna 150 YY52, YY61, LY60	2000 cc Diesel	86-88	**VKC 3502**
Dyna 150 YY52, YY61, LY60	2000 cc Diesel	88 |->	**VKC 3615**
Dyna 150 LY60,YY61,YU62,81,82,RU85	2000 cc, 2200 cc, 2400 cc Diesel	88 |->	**VKC 3502**
Dyna 150 LY61	Diesel	89 |->	**VKC 3615**
Dyna 200 BU83,84	Diesel	88-89	**VKC 3523**
Dyna 200 BU60,61,80,81,83,84,85,88,91,96	Diesel	89 |->	**VKC 3548**

HiAce

Hiace RH10,11,16	1350 cc, 1600 cc	71-71	**VKC 3543**
Hiace RH10	1350 cc, 1600 cc	71-79	**VKC 3520**
Hiace RH11,16	1600 cc	71-75	**VKC 3520**
Hiace RH11	1600 cc	72-75	**VKC 3520**
Hiace RH11,13,16,20,24,30,34,40	1600 cc	75-80	**VKC 3506**
Hiace YH80	1600 cc	85-87	**VKC 3502**
Hiace RH11,13,16,20,24,30,34,40	1600 cc, 2000 cc & Diesel	77-80	**VKC 3506**
Hiace RH11,20,30,22,32,42, LH11,20,30	1600 cc, 2000 cc & Diesel	77-80	**VKC 3506**
Hiace RH11,13,16,20,22,24,30,34,40	1600 cc, 2000 cc & Diesel	80-82	**VKC 3502**
Hiace RH12,14,17,21,31,41	1800 cc	75-79	**VKC 3506**
Hiace YH50V,60V	1800 cc	82 |->	**VKC 3502**
Hiace YH50V	1800 cc	85-87	**VKC 3616**
Hiace YH81	1800 cc	87-89	**VKC 3616**
Hiace M-YH51G, M-YH61G, M-YH50V, YH50, YH60	1800 cc, 2000 cc	83-86	**VKC 3502**
Hiace RH22,25,32,42:RG23G,33G	2000 cc	72-80	**VKC 3506**
Hiace RH35,45 :RG23G,33G :YH51G,52V,61G,62V,71V,2000	2000 cc	80 |->	**VKC 3502**
Hiace E-YH51G, E-YH51V, M-YH71V	2000 cc	82-87	**VKC 3502**
Hiace E-YH52V	2000 cc	87-89	**VKC 3616**
Hiace RZH100G,102V,110G	2000 cc	89-93	**VKC 3616**
Hiace YH51, YR61, YR63	2000 cc, 2200 cc	86-88	**VKC 3502**
Hiace YH51, YR61, YR63	2000 cc, 2200 cc	89 |->	**VKC 3616**
Hiace M-YH61V,N-LH60G,N-LH60V	2000 cc, 2400 cc	83 |->	**VKC 3502**
Hiace RZH102,103,109,112,113,119	2000 cc, 2400 cc	90-93	**VKC 3616**
Hiace LH11,20,24,30,40	2200 cc	79-80	**VKC 3506**
Hiace N-LH24,N-LH24HV,LH50,LH60,E-YH51G,N-LH50G	2200 cc1.0t,Diesel, 2000 cc, 2400 cc	83-84	**VKC 3502**
Hiace LH11,20,24,30,40,50G,50V,51,60G,60V,70V;RH24,	1600 cc, 2200 cc	80-85	**VKC 3502**
Hiace N-LH61G,71B,51V,51G,61V, N-LH50G	2200 cc, 2400 cc	83-84	**VKC 3502**
Hiace LH51G,61G,61V,71G,71V,80,80VH,151	2400 cc	84-85	**VKC 3502**
Hiace N-LH51, N-LH61G, N-LH71, N-LH61V, N-LH80	2400 cc	85-86	**VKC 3502**
Hiace LH80, LH80VH	2400 cc	85-91	**VKC 3615**
Hiace N-LH56, N-LH66	2400 cc	87 |->	**VKC 3502**
Hiace LH100G, LH102V, LH85, U-LH80VH, U-LH85	2400 cc 4WD(Diesel)	87-93	**VKC 3615**
Hiace LH50, LH60, LH51, LH61	Diesel	83-88	**VKC 3502**
Hiace LH51, LH61	Diesel	89 |->	**VKC 3615**
Hiace LH102,108,112,118	Diesel	90-93	**VKC 3615**
Hiace Bus RH11B,16B	1600 cc	71-75	**VKC 3520**
Hiace Bus RH11B,16B,20B,30B,40B	1600 cc	75-80	**VKC 3506**
Hiace Bus YH60B, YH50	1800 cc	84-86	**VKC 3502**
Hiace Bus RH22B,32B,42B	2000 cc	77-80	**VKC 3506**
Hiace Bus RH22B,32B,42B	2000 cc	80-82	**VKC 3502**
Hiace Bus YH71B:LH60B,61B,70B,71B	2000 cc, 2200 cc, 2400 cc	82 |->	**VKC 3502**

HiLux

Hilux RN20, RN25	1600 cc	71-74	**VKC 3520**
Hilux RN13, RN16	1600 cc	71-74	**VKC 3520**
Hilux RN20,25,30,33,34,40,43	1600 cc	74-80	**VKC 3506**
Hilux RN20, RN25	1600 cc	75-78	**VKC 3506**
Hilux RN30,40, LN30,40	1600 cc & Diesel	81-84	**VKC 3502**
Hilux RN30,40, LN30,40; RN36, RN46	1600 cc & Diesel, 2000 cc 4WD	79-80	**VKC 3506**
Hilux RN33,34,35,40,44,45:YN50,51,55,56,61	1600 cc, 1800 cc	80 |->	**VKC 3502**
Hilux YN50,52,55,57, LN50,51,55,56	1600 cc, 2000 cc & Diesel	84 |->	**VKC 3502**
Hilux L-YN51, L-YN56; N-LN55,50,56	1800 cc1.0t, 2200 cc1.0t	84 |->	**VKC 3502**
Hilux YH81,LH80	1800 cc Diesel	88 |->	**VKC 3502**
Hilux YN80,81,85,86,87,92	1800 cc, 2000 cc, 2200 cc 2WD	89 -92	**VKC 3616**
Hilux RN22	2000 cc	72-75	**VKC 3506**
Hilux RN31,36,39,41,46	2000 cc	78-80	**VKC 3506**
Hilux RN31, RN41	2000 cc	79-80	**VKC 3502**
Hilux RN31,36,39,41,46:YN57,61,61G,65	2000 cc	80 |->	**VKC 3502**
Hilux YN60	2000 cc	80-88	**VKC 3502**
Hilux RN31, RN41	2000 cc	81-84	**VKC 3502**
Hilux E-YN60, E-YN65, E-YN61G.V	2000 cc	85-86	**VKC 3502**
Hilux YN61G, YN61V, YN65	2000 cc	85-89	**VKC 3502**
Hilux YN60, YN65	2000 cc 4WD	84-85	**VKC 3502**
Hilux RN36, RN46;RN30,40,LN30,40	1600 cc & Diesel, 2000 cc 4WD	81-84	**VKC 3502**
Hilux L-RN39;K-LN36, K-LN46	2000 cc, 2200 cc	83 |->	**VKC 3502**
Hilux N-LN41,51,56, N-YN51,56,N-LN61	2000 cc, 2400 cc	85-86	**VKC 3502**
Hilux L-YN65, L-YN60V;LN60,65	2000 cc, Diesel 4WD	84 |->	**VKC 3502**
Hilux LN30,40	2200 cc	79-80	**VKC 3506**
Hilux N-LN40;L-RN35,L-RN45	1600 cc, 2200 cc	83-84	**VKC 3502**
Hilux YN67	2200 cc 4WD	86 |->	**VKC 3502**
Hilux LN30,40,60..,65	2200 cc, 2400 cc, 2500 cc	80-85	**VKC 3502**
Hilux N-LN60, N-LN65	2400 cc	84-86	**VKC 3502**
Hilux RN80,85 LN80,85,90	2400 cc & Diesel 2WD	88-92	**VKC 3615**
Hilux LN41, LN51, LN56; RN35, RN45	1600 cc, 2400 cc	85-88	**VKC 3502**
Hilux LN105,106,108,110,111	2800 cc	88-92	**VKC 3628**
Hilux LN100, LN106,LN80,YN85,90,106,110	2400 cc, 2800 cc	88-92	**VKC 3616**
Hilux LN36, LN46	Diesel	81-83	**VKC 3502**

LiteAce

LiteAce KM10	1200 cc	71-72	**VKC 3505**
LiteAce KM10	1200 cc	72-78	**VKC 3506**
LiteAce KM11	1200 cc, 1300 cc	71-79	**VKC 3506**
LiteAce KM20	1300 cc	80-85	**VKC 3502**
LiteAce KM35V	1300 cc	85-88	**VKC 3502**
LiteAce KM50	1300 cc	86-90	**VKC 3502**
LiteAce L-YM20V;L-KM21,L-KM21V;E-YM21G,L-YM25	1300 cc, 1600 cc, 1800 cc	83-84	**VKC 3502**
LiteAce KM11,20,21,30G,31V,35V,36V,37G:YM20,25	1300 cc, 1500 cc, 1600 cc	79 |->	**VKC 3502**
LiteAce E-KM21, E-YM25	1300 cc, 1600 cc	85-86	**VKC 3502**
LiteAce E-KM30G, E-KM36V	1500 cc	85-86	**VKC 3502**
LiteAce E-KM31V	1500 cc	85-90	**VKC 3502**
LiteAce KM36, KM37, YM31	1500 cc, 1800 cc	86 |->	**VKC 3502**
LiteAce KM30G, CM36V	1500 cc, 2000 cc	85-91	**VKC 3616**
LiteAce CM30G, KM36V, CM31V	1500 cc, 2000 cc	85-91	**VKC 3502**
LiteAce KM11	1800 cc	78-79	**VKC 3506**
LiteAce TMG20	1800 cc	79-80	**VKC 3502**
LiteAce E-YM30G	1800 cc	85-86	**VKC 3502**
LiteAce YM30G	1800 cc	85-88	**VKC 3616**

TOYOTA .../...

LiteAce YM30	1800 cc	86-87	**VKC 3502**
LiteAce CM50	1800 cc	86-89	**VKC 3616**
LiteAce YM60, YM65	1800 cc	86-91	**VKC 3502**
LiteAce YM31V	1800 cc	90-91	**VKC 3616**
LiteAce L-CM25	1800 cc	84 |->	**VKC 3502**
LiteAce TM20..:YM21G,30G,31V:CM20,25,26,30G,35V	1800 cc, 2000 cc	80 |->	**VKC 3502**
LiteAce L-YM60, E-YM40G, N-CM20, N-CM26	1800 cc, 2000 cc	85-86	**VKC 3502**
LiteAce N-CM30G, N-CM60	2000 cc	85-86	**VKC 3502**
LiteAce N-CM40G	2000 cc	85-91	**VKC 3502**
LiteAce N-CM40G,60	2000 cc 4WD Diesel	85-86	**VKC 3502**
LiteAce CM51,CM55,CM60;KM51;YM55	1500 cc, 1800 cc, 2000 cc	86-91	**VKC 3616**
LiteAce CM20	Diesel	83-85	**VKC 3502**
LiteAce CM35	Diesel	86-88	**VKC 3502**
LiteAce YM30, CM36	Diesel, 1800 cc	88 |->	**VKC 3616**
Master-Ace / Mini-Ace / Model F			
Master-Ace E-YR20G, E-YR28G	1800 cc	85-88	**VKC 3616**
Master-Ace E-YR20G, E-YR21G	1800 cc, 2000 cc	83-86	**VKC 3502**
Master-Ace E-YR28G, E-YR30G, E-YR38G, N-CR30G, N-CR36V	1800 cc, 2000 cc	85-86	**VKC 3502**
Master-Ace E-CR21G, E-CR28G, E-YR21G	2000 cc	83-88	**VKC 3616**
Master-Ace N-CR21G, N-CR28G	2000 cc	84-86	**VKC 3502**
Master-Ace E-CR37G	2000 cc	87-88	**VKC 3616**
Mini-Ace UP100	800 cc	70-73	**VKC 3528**
Model-F YR20, YR21, YR31	1800 cc, 2000 cc, 2200 cc	83-88	**VKC 3502**
Model-F YR21, YR22, YR31	2000 cc, 2200 cc	89 |->	**VKC 3616**
Model-F YR31, CR21	2200 cc 4WD Diesel	83-88	**VKC 3502**
Stout			
Stout RK101	2000 cc	75-79	**VKC 3520**
Stout RK110	2000 cc	79-80	**VKC 3506**
Stout RK111	2000 cc	80-86	**VKC 3502**
Stout RK110	2000 cc	80-86	**VKC 3502**
Stout RK101	2000 cc	70-75	**VKC 3543**
Stout YK110	2200 cc	87-88	**VKC 3502**
Stout YK110	2200 cc	88 |->	**VKC 3615**
TownAce			
TownAce L-KM21	1300 cc	83 |->	**VKC 3502**
TownAce L-KM50	1300 cc	86-90	**VKC 3616**
TownAce L-KM51;YM55,YM60;CM60,CM65	1500 cc, 1800 cc, 2000 cc	86-91	**VKC 3616**
TownAce YR26V	1600 cc	82-88	**VKC 3502**
TownAce L-YM25, L-YR26V, N-CR26V, N-CM25	1600 cc, 1800 cc, 2000 cc	82-87	**VKC 3502**
TownAce E-YR20G	1800 cc	82-88	**VKC 3616**
TownAce CM50	1800 cc	86-89	**VKC 3616**
TownAce E-YR21G	1800 cc, 2000 cc	83-86	**VKC 3502**
TownAce N-CR27V	1800 cc, 2000 cc	84 |->	**VKC 3502**
TownAce N-CM20, N-CM26	1800 cc, 2000 cc	85-86	**VKC 3502**
TownAce E-YR28G, N-CR21G, E-YR25V, N-CR27V	1800 cc, 2000 cc	85-91	**VKC 3616**
TownAce E-YR21G, N-CR21G, N-CR28G	2000 cc	83-88	**VKC 3502**
TownAce YR30G, YR36G	2000 cc	85-88	**VKC 3616**
TownAce CR30G, CR36V	2000 cc	85-91	**VKC 3502**
TownAce CR28G, CR37G, CM51	2000 cc	87-91	**VKC 3616**
TownAce E-YR30G, E-YR38G, N-CR30G, N-CR36V;E-KM21, E-YM25	1300 cc, 1600 cc, 2000 cc	85-86	**VKC 3502**
TownAce/Model F KR10, KR11, KR12	1200 cc, 1300 cc	76-79	**VKC 3506**

www.bergab.ru Берг АБ bergab@ya.ru Тел. (495)-228-06-21, факс (495) 223-3071

TownAce/Model F KR12	1300 cc	79-82	**VKC 3502**
TownAce/Model F RR11,20,21:TR10,11	1600 cc	79-80	**VKC 3506**
TownAce/Model F RR11,21,TR11, TR15	1600 cc	80-82	**VKC 3502**

ToyoAce

ToyoAce PY10	1350 cc	71-79	**VKC 3502**
ToyoAce RY10,12,14	1600 cc	71-75	**VKC 3543**
ToyoAce RY10,12,14	1600 cc	75-75	**VKC 3520**
ToyoAce RY10,12,14,20,30	1600 cc	75-80	**VKC 3506**
ToyoAce RY20,30	1600 cc	80-82	**VKC 3502**
ToyoAce RY21,YY50	1600 cc	82 |->	**VKC 3502**
ToyoAce RY20,30,31, LY20, JY30	1600 cc, 2000 cc & Diesel, 2500 cc	79-80	**VKC 3506**
ToyoAce RY20,30,31, LY20, JY30	1600 cc, 2000 cc & Diesel, 2500 cc	81 |->	**VKC 3502**
ToyoAce M-RY32, M-RY21,N-LY20,N-LY30	1600 cc, 2000 cc, 2200 cc, 2400 cc	83 |->	**VKC 3502**
ToyoAce M-YY50, M-YY52, M-YY/YU61,N-LY50,N-LY/M-YU60/70	1800 cc	85-86	**VKC 3502**
ToyoAce M-YY51	1800 cc	87-90	**VKC 3615**
ToyoAce RY16	2000 cc	72-75	**VKC 3513**
ToyoAce RY16,31	2000 cc	75-80	**VKC 3506**
ToyoAce RY31,32	2000 cc	80 |->	**VKC 3502**
ToyoAce YU60	2000 cc	85-87	**VKC 3502**
ToyoAce YY52,61	2000 cc	85-87	**VKC 3502**
ToyoAce LY20,30	2200 cc	79-80	**VKC 3506**
ToyoAce LY20,30	2200 cc	80-83	**VKC 3502**
ToyoAce N-LY31, LY21, 31, 60, LY50	2200 cc, 2400 cc	83-91	**VKC 3502**
ToyoAce JY16	2500 cc	72-75	**VKC 3513**
ToyoAce JY16,30	2500 cc	75-80	**VKC 3506**
ToyoAce JY30	2500 cc	80-83	**VKC 3502**
ToyoAce N-BU60,61,70, P-BU62,64	2500 cc	85-86	**VKC 3523**
ToyoAce BY30,31,3	3000 cc	80 |->	**VKC 3523**
ToyoAce BU60, BU60VH	3000 cc	86-91	**VKC 3523**
ToyoAce BU60,BU61,BU83,BU84	3000 cc	02/90	**VKC 3643**
ToyoAce N-BY31, BU62, BU64, BU64D	3000 cc, 3400 cc	83-88	**VKC 3523**
ToyoAce BU90, BU93, BU68DH, BU78	3400 cc, 3700 cc	85-91	**VKC 3548**
ToyoAce BU66	3700 cc	02/90	**VKC 3643**
ToyoAce BU67,BU78,BU87,BU88,BU91,BU94,BU96	3700 cc	02/90	**VKC 3643**
ToyoAce BU66, BU66D	3700 cc	88-91	**VKC 3548**
ToyoAce BU72D,BU72H	3700 cc	10/89 |->	**VKC 3642**
ToyoAce BU74	3700 cc	10/89 |->	**VKC 3642**
ToyoAce N-BU90,95,93,98	3.0 - 3.5t	85-86	**VKC 3548**
ToyoAce P-WU75,90,95	3.0 - 3.5t	85-86	**VKC 3575**
ToyoAce WU90, WU95	4000 cc	85-89	**VKC 3548**
ToyoAce WU85	4000 cc	10/89 |->	**VKC 3650**
ToyoAce WU75D	4000 cc	90-95	**VKC 3644**
ToyoAce U-LY51,61, M-YY52, 61	Diesel / Gasoline	87-88	**VKC 3615**

VAUXHALL

Astra

Astra 1.1		80-84	**VKC 2186**
Astra 1.2	TT / Except 12ST	80-84	**VKC 2186**
Astra 1.2	12ST	85-91 .c)	**VKC 2186**
Astra 1.2	12ST	85-91 .c)	**VKC 2215**
Astra 1.3		80-07/86	**VKC 2186**
Astra 1.3		08/86 |->	**VKC 2215**
Astra 1.4			**VKC 2215**

www.bergab.ru Берг АБ bergab@ya.ru Тел. (495)-228-06-21, факс (495) 223-3071

www.bergab.ru Берг АБ bergab@ya.ru Тел. (495)-228-06-21, факс (495) 223-3071

VAUXHALL .../...

Astra 1.6		80-08/86	c)	VKC 2213
		09/86-91	c)	VKC 2215
Astra 1.8			c)	VKC 2213
	GBX: F16		c)	VKC 2238
	GBX: F10,F13		c)	VKC 2215
Astra 2.0			c)	VKC 2213
	GBX: F16		c)	VKC 2238
	GBX: F10,F13		c)	VKC 2215
Astra 1.6 Diesel		80-08/84		VKC 2213
Astra Diesel		09/84 |->	c)	VKC 2213
		09/84 |->	c)	VKC 2238
		09/84 |->	c)	VKC 2215
Belmont				
Belmont 1.3		->| 07/86		VKC 2186
		08/86 |->		VKC 2215
Belmont 1.6		->| 08/86	c)	VKC 2213
		09/86-91	c)	VKC 2215
Belmont 1.8			c)	VKC 2213
	GBX: F16		c)	VKC 2238
	GBX: F10,F13		c)	VKC 2215
Belmont 2.0			c)	VKC 2213
	GBX: F16		c)	VKC 2238
	GBX: F10,F13		c)	VKC 2215
Belmont 1.6 Diesel		09/84 |->	c)	VKC 2213
		09/84 |->	c)	VKC 2238
		09/84 |->	c)	VKC 2215
Carlton				
Carlton		78-86		VKC 2186
		87-92		VKC 2215
Calibra				
Calibra	TT			VKC 2238
Cavalier				
Cavalier 1.3		->| 07/86		VKC 2186
		08/86-08/88		VKC 2215
Cavalier 1.4				VKC 2215
Cavalier 1.6		76-08/81		VKC 2186
	GBX: F16	09/81-07/86		VKC 2213
	GBX: F16	08/86-08/88		VKC 2238
	GBX: F13	08/86-08/88		VKC 2215
		89 |->		VKC 2215
Cavalier 1.8			c)	VKC 2213
	GBX: F16,F18		c)	VKC 2238
	GBX: F15		c)	VKC 2215
Cavalier 2.0			c)	VKC 2186
			c)	VKC 2215
			c)	VKC 2238
Cavalier 2.0 16V				VKC 2238
Cavalier 2.5 V6				VKC 2238
Cavalier 1.6 Diesel	16D - 1586 cc			VKC 2213
	16DA - 1586 cc ->| Mot 14498630			VKC 2215
	16DA - 1586 cc Mot 14498631 |->			VKC 2238

www.bergab.ru Берг АБ bergab@ya.ru Тел. (495)-228-06-21, факс (495) 223-3071

www.bergab.ru Берг АБ bergab@ya.ru Тел. (495)-228-06-21, факс (495) 223-3071

Cavalier 1.7 Diesel			VKC 2215
Cavalier 1.7 Turbo Diesel			VKC 2238
Corsa			
Corsa	TT		VKC 2215
Frontera			
Frontera 2.8 Turbo Diesel			VKC 3606
Nova			
Nova 1.0		83-87	VKC 2186
Nova 1.2		83-07/86	VKC 2186
		08/86-92	VKC 2215
Nova 1.3			VKC 2215
Nova 1.4			VKC 2215
Nova 1.6			VKC 2215
Nova 1.5 Diesel, Turbo Diesel			VKC 2215
Omega			
Omega 2.0		94 |->	VKC 2541
Omega 2.0 16V		94 |->	VKC 2541
Omega 2.5 16V		94 |->	VKC 2541
Omega 3.0 24V		94 |->	VKC 2541
Omega 2.5 Turbo Diesel		94 |->	VKC 2541
Royale			
Royale	TT	c)	VKC 2186
Senator			
Senator	TT	->| 06/88	VKC 2186
	TT	07/88 |->	VKC 2215
Tigra			
Tigra 1.4 16V, 1.6 16V			VKC 2215
Vectra			
Vectra 1.4			VKC 2215
Vectra 1.6		->| 11/95	VKC 2215
Vectra 1.8		->| 11/95	VKC 2238
Vectra 2.0; 2.0 16V		->| 11/95	VKC 2238
Vectra 2.5		->| 11/95	VKC 2238
Vectra 1.7 Diesel			VKC 2215
Vectra 1.7 Turbo Diesel		->| 11/95	VKC 2238
Viceroy			
Viceroy	TT		VKC 2186

VOLKSWAGEN

Corrado			
Corrado			VKC 2241
Derby			
Derby (Ch. 5-9,A -> -G-023 468)		82-90	VKC 2125
Derby (Ch. -G-023 469 -> Ch. L)		82-90	VKC 2220
Derby (Ch. M-R)		91-94	VKC 2220
Golf			
Golf 1.05 (Ch. E -> CH -G-064940)	GN,HZ	84-86	VKC 2125
Golf 1.05 (Ch. -G-064941 -> Ch. 1G-N-300000)	GN,HZ	86-92	VKC 2220
Golf 1.1 (Ch. 5-9,A-E)	FA,FJ,GG	75-84	VKC 2125

www.bergab.ru Берг АБ bergab@ya.ru Тел. (495)-228-06-21, факс (495) 223-3071

VOLKSWAGEN .../...

Golf 1.3 (Ch. 9,A -> Ch. -G-064940)	GF,GS,GT,HK,HW,MH,NU	79-86	VKC 2125
Golf 1.3 (Ch. -G-064941 -> Ch. 1G-N-300000)	2C,2G,GT,MH,NU,NZ	86-92	VKC 2220
Golf 1.4	ABD	92-95	VKC 2220
	AEX	94 |->	VKC 2195
Golf 1.5 (Ch. 9,A -> Ch. 16/17-E-299999)	GBX 5	79-84	VKC 2195
Golf 1.5 (Ch. 16/19-E-300001 -> Ch. 1G-N-300000)		85-92	VKC 2195
Golf 1.6 (Ch. 9,A -> Ch. 16/17-E-299999)	GBX 5	79-84	VKC 2195
Golf 1.6 (Ch. 16/19-E-300001 -> Ch. 1G-N-300000)		85-92	VKC 2195
Golf 1.6	ABU, AEA	92-95	VKC 2220
	AEE, AEK, AFT	94 |->	VKC 2195
Golf 1.8 (Ch. C -> Ch. 16/17-E-299999)	GBX 5	82-84	VKC 2195
Golf 1.8 (Ch. 16/19-E-300001 -> Ch. 1G-N-300000)		85-92	VKC 2195
Golf 1.8 G60 (Ch. L-N)	PG	90-92	VKC 2241
Golf 1.8 GTI,GTI 16V		82-94	VKC 2195
Golf 1.8	AAM,ABS,ACC,ADZ	92 |->	VKC 2195
Golf 1.8 Syncro	ABS, ADZ	93 |->	VKC 2241
Golf 2.0	2E	91-95	VKC 2195
Golf 2.0	ABF	92 |->	VKC 2241
Golf 2.0	ADY,AEP	94 |->	VKC 2195
Golf 2.0 (Except Syncro)	AGG	97 |->	VKC 2195
Golf 2.0 Syncro (Ch. P-T)	AGG	93 |->	VKC 2241
Golf 2.8	AAA	92 |->	VKC 2241
Golf Syncro 2.9	ABV	93 |->	VKC 2241
Golf Diesel,Turbo Diesel		85-92	VKC 2195
Golf 1.9 Diesel	1Y,AAZ, AEY, AFN	93 |->	VKC 2195
Golf 1.9 TDI	1Z	92 |->	VKC 2241

Jetta

Jetta 1.3 (Ch. 9,A -> Ch. -G-064940)	GF,GS,GT,HK,HW,MH,NU	79-86	VKC 2125
Jetta 1.3 (Ch. -G-064941 -> Ch. 1G-N-300000)	2C,2G,GT,MH,NU,NZ	86-92	VKC 2220
Jetta 1.5,1.6 (Ch. 9,A -> Ch. 16/17-E-299999)	GBX 5	79-84	VKC 2195
Jetta 1.5,1.6 (Ch. 16/19-E-300001 -> Ch. 1G-N-300000)		85-92	VKC 2195
Jetta 1.8 (Ch. C -> Ch. 16/17-E-299999)	GBX 5	82-84	VKC 2195
Jetta 1.8 (Ch. 16/19-E-300001 -> Ch. 1G-N-300000)		85-92	VKC 2195
Jetta 1.8 G60 (Ch. L-N)	PG	90-92	VKC 2241
Jetta 1.8 GTI,GTI 16V		82-92	VKC 2195
Jetta 2.0	2E	91-92	VKC 2195
Jetta Diesel,Turbo Diesel		85-92	VKC 2195

Passat

Passat 1.3			VKC 2091
Passat 1.5			VKC 2091
Passat 1.6		->| 03/88	VKC 2091
		04/88 |->	VKC 2241
Passat 1.8		->| 03/88	VKC 2091
		04/88 |->	VKC 2241
Passat 2.0		->| 03/88	VKC 2091
		04/88 |->	VKC 2241
Passat 2.2			VKC 2091
Passat 2.8			VKC 2241
Passat 2.9 Syncro (Ch. R-T)	ABV	94 |->	VKC 2241
Passat 1.5 Diesel			VKC 2091
Passat 1.6 Diesel			VKC 2091

www.bergab.ru Берг АБ bergab@ya.ru Тел. (495)-228-06-21, факс (495) 223-3071

Passat 1.6 Turbo Diesel		->| 07/88	**VKC 2091**
		08/88 |->	**VKC 2241**
Passat 1.9 Diesel (Ch. R-T)	1Z,AAZ	94 |->	**VKC 2241**
Polo			
Polo (Ch. 5-9,A -> Ch. -G-023 468)		82-90	**VKC 2125**
Polo (Ch. -G-023 469 -> Ch. ”L”)		82-90	**VKC 2220**
Polo (Ch. M-R)		91-94	**VKC 2220**
Polo 1.05	AEV	95 |->	**VKC 2220**
Polo 1.3	ADX	95 |->	**VKC 2220**
Polo 1.4	AEX,AFH	95-97	**VKC 2220**
Polo 1.6	AEA,AEE	95 |->	**VKC 2220**
Polo Classic 1.6 (Ch. T-V)	1F,AFT	96-97	**VKC 2195**
Polo 1.9 Diesel (Ch. S)	AEF,AGD	95 |->	**VKC 2220**
Polo Classic 1.9 Diesel (Ch. T-V)	1Y	96-97	**VKC 2195**
Polo Classic 1.9 SDI (Ch. T-V)	AEY	96-97	**VKC 2195**
Polo Classic 1.9 TDI (Ch. V)	AHU	97 |->	**VKC 2241**
Scirocco			
Scirocco 1.1,1.3		74-86	**VKC 2125**
Scirocco 1.5,1.6 (Ch. 9,A -> Ch. 16/17-E-299999)	GBX 5	75-84	**VKC 2195**
Scirocco 1.5,1.6 (Ch. 16/19-E-300001 -> Ch. 1G-N-300000)		85-92	**VKC 2195**
Vento			
Vento 1.4	ABD	92-95	**VKC 2220**
	AEX	96 |->	**VKC 2195**
Vento 1.6	ABU, AEA	92-95	**VKC 2220**
	AEE, AEK, AFT	95 |->	**VKC 2195**
Vento 1.8	AAM, ADZ,ABS	92 |->	**VKC 2195**
Vento 2.0 (Ch. N-S)	ABF	92-95	**VKC 2241**
Vento 2.0	2E,AGG,ADY,AEP	92 |->	**VKC 2195**
Vento 2.8	AAA	92 |->	**VKC 2241**
Vento 1.9 Diesel	1Y, AAZ, AEY	92 |->	**VKC 2195**
Vento 1.9 TDI	1Z	92 |->	**VKC 2241**

VOLKSWAGEN

Caddy-Kombi			
Caddy-Kombi 1.4	AEX	96 |->	**VKC 2220**
Caddy-Kombi 1.6	1F	96 |->	**VKC 2195**
CADDY 1.6 Diesel	JK,ME	83-96	**VKC 2195**
Caddy-Kombi 1.7 Diesel	AHB	96 |->	**VKC 2195**
Caddy-Kombi 1.9 Diesel	1Y	96 |->	**VKC 2195**
Caddy-Kombi 1.9 SDI Diesel	AEY	96 |->	**VKC 2195**
Caddy-Kombi 1.9 Turbo Diesel	AHU	96 |->	**VKC 2195**
Lastentransporter			
LT 2.0 (Ch. 5-9,A-D)	CH,CL	76-83	**VKC 2091**
LT 2.4 (Ch. D-K)	1E,DL,HS	83-89	**VKC 2125**
LT 2.4 (Ch. L-T)	1E,DL	90-96	**VKC 2091**
LT 2.4 Diesel (Ch. 5-9,A-K)	CP,DW	76-89	**VKC 2125**
LT 2.4 Diesel (Ch. L-T)	1S,ACT,DW,ACL	90-96	**VKC 2091**
LT 2.7 Diesel (Ch. 5-9,A-D)	CG	76-83	**VKC 2125**
LT 2.4 Turbo Diesel (Ch. D-K)	1G,DV	83-89	**VKC 2125**
LT 2.4 Turbo Diesel (Ch. L-T)	1G,DV	90-96	**VKC 2091**
Taro			
Taro 1.8 (Ch. K-T)	2Y		**VKC 3616**

www.bergab.ru Берг АБ bergab@ya.ru Тел. (495)-228-06-21, факс (495) 223-3071

www.bergab.ru Берг АБ bergab@ya.ru Тел. (495)-228-06-21, факс (495) 223-3071

VOLKSWAGEN .../...

Taro 2.2 4X4 (Ch. K-T)	2L		VKC 3616
Taro 2.4 4X4 (Ch. K-T)	4Y		VKC 3616
Taro 2.4 Diesel (Ch. K-T)	22R		VKC 3615

Transporter

Transporter 1.8 (Ch. M-R)	PD	91-94	VKC 2241
Transporter 2.0 (Ch. M-T)	AAC	91-96	VKC 2241
Transporter 2.5 (Ch. M-T)	AAF,ACU,AEN	91-96	VKC 2241
Transporter 1.9 Diesel (Ch. M-T)	1X	91-96	VKC 2241
Transporter 1.9 Turbo Diesel (Ch. M-T)	ABL	91-96	VKC 2241
Transporter 2.4 Diesel (Ch. M-T)	AAB	91-96	VKC 2241
Transporter Syncro 2.5 Diesel (Ch. T)	ACV	96 |->	VKC 2241

Typ 1/Typ 2

Typ 1,2		VKC 2091

Typ 4

Typ 4		VKC 2241

VOLVO

100 Series

100	c)	VKC 2065
	c)	VKC 2104

200 Series

240	c)	VKC 2065
	c)	VKC 2104
260 2.7, 2.8		VKC 2045
260 2.0 Diesel		VKC 2065
260 2.4 Diesel		VKC 2065

300 Series

340 1.7		VKC 2235

400 Series

440		VKC 2191
460		VKC 2191
480		VKC 2191

700 Series

740		VKC 2065
760 (Except 2.8)		VKC 2065
760 2.8		VKC 2045
780		VKC 2065

850

850		VKC 2514

900 Series

940		VKC 2065
960		VKC 2065

S40 / V40

S40 / V40		VKC 2433

ZUK

ZUK	c)	VKC 2521

www.bergab.ru Берг АБ bergab@ya.ru Тел. (495)-228-06-21, факс (495) 223-3071

www.bergab.ru Берг АБ bergab@ya.ru Тел. (495)-228-06-21, факс (495) 223-3071

VKC 1000	PEUGEOT	403 / 404
VKC 2025	SAAB	95/96
VKC 2045	MERCEDES	C180 / C200 / C220 / 200-230 / 240 GD / 300 GD / 206-310
	VOLVO	260 / 760
VKC 2051	PEUGEOT	404 / 504 / 604
	TALBOT	Murena / Tagora
VKC 2054	CITROËN	2 CV / Acadiane / Ami / Dyane / LN-LNA / Visa
VKC 2064	FIAT	124 / 125 / 131 / 132 / Argenta / Campagnola / Spider
	SEAT	131 / 132 / 1430
VKC 2065	VOLVO	100 / 240 / 260 / 260 / 740 / 760 / 780 / 940 / 960
VKC 2080	RENAULT	Alpine / Fuego / R4 / R5 / R6 / R8 / R12 / R15 / R18 / Trafic
	TALBOT	Bagheera / Horizon / Rancho / Simca / Solara
VKC 2083	ALFA ROMEO	Alfa 75 / 90 / Alfetta / Giulietta / GTV / SZ
VKC 2091	AUDI	80 / 90 / 100 / 200 / Coup
	PORSCHE	924
	VOLKSWAGEN	LT / Passat / Typ
VKC 2095	FIAT	127 / Cinquecento / Panda / Uno
	LANCIA	A112 / Y10
	SEAT	127 / Ibiza / Marbella / Panda / Terra
VKC 2104	VOLVO	100 / 240
VKC 2108	CITROËN	BX / C15 / LN-LNA / Visa
	PEUGEOT	104 / 205
	RENAULT	R14
	TALBOT	Samba
VKC 2111	PEUGEOT	204 / 304 / 305
VKC 2113	FIAT	126 / 500 R / Cinquecento / Panda
VKC 2114	CITROËN	Ami Super / Axel / GS / GSA
VKC 2115	ALFA ROMEO	AR6
	CITROËN	C25 / CX
	FIAT	Ducato / Talento
	PEUGEOT	J5
	RENAULT	R12 / R15 / R16 / R17 / R20
	TALBOT	Express
VKC 2120	BMW	315 / 316 / 318 / 320 / 323 / 325 / 325 D / 518 / 523 / 525 / 528 / 530 / 533 / 525 TD / ”6” series / ”7” series / M3 / M5 / M6 / Z1
VKC 2123	ALFA ROMEO	Alfa 145 / 146 / 33 / Alfasud / Arna
VKC 2125	AUDI	Audi 50
	VOLKSWAGEN	Derby / Golf / Jetta / LT / Polo Scirocco
VKC 2144	FORD	Capri / Consul / Cortina / Escort / Fiesta / Granada Orion / P100 / Scorpio / Sierra / Taunus / Transit
	TALBOT	Avenger
VKC 2146	PEUGEOT	J7 / J9
VKC 2150	RENAULT	Alpine / R20 / R30 / Trafic
VKC 2151	BMW	320 / 323 / 518
VKC 2161	FORD	Courrier / Escort / Fiesta / Orion
VKC 2163	FORD	Escort / Sierra
VKC 2164	FORD	Capri / Cortina / Sierra / Taunus
VKC 2168	ALFA ROMEO	Alfa 155 / 164
	FIAT	127 / 128 / 147 / 241 / Bravo-Brava / Croma / Duna / Fiorino Marea / Punto / Regata / Strada-Ritmo / Tempra / Tipo Uno / X1/9
	INNOCENTI	Elba / Mille Clip
	LANCIA	Dedra / Delta / Kappa / Prisma / Thema
	SEAT	1200 / 128 / Fura / Ibiza / Malaga / Ritmo / Ronda

www.bergab.ru Берг АБ bergab@ya.ru Тел. (495)-228-06-21, факс (495) 223-3071

VKC 2169	PEUGEOT	504 / 604
	TALBOT	Tagora
VKC 2170	IVECO	30-8 / 35-8 / 40-8 / A35-8
VKC 2183	FIAT	Bravo-Brava / Cinquecento / Marea / Punto / Uno
	LANCIA	Epsilon / Y10
VKC 2186	OPEL	Admiral / Ascona / Commodore
		Corsa / Kadett / Manta / Monza / Rekord / Senator
	VAUXHALL	Astra / Belmont / Carlton / Cavalier / Nova / Royale
		Senator / Viceroy
VKC 2189	RENAULT	Alpine / Espace / Fuego / R18 / R20 / R21 / R25 / R30 / Trafic
VKC 2190	RENAULT	Master
VKC 2191	RENAULT	Clio / Express F40 / R9 / R11 / R19 / R21 / Super 5 / Trafic
		Twingo
	VOLVO	440 Series / 460 Series / 480 series
VKC 2192	CITROËN	C32
	FIAT	242
VKC 2193	CITROËN	Bx / C15 / Visa
	PEUGEOT	205 / 305 / 309 / 405
	TALBOT	Horizon / Murena / Rancho / Simca / Solara
VKC 2194	CITROËN	C32 / C35 / DS / ID
	FIAT	242
VKC 2195	AUDI	A3
	ROVER	Maestro / Montego
	SEAT	Cordoba / Fura / Ibiza / Inca / Toledo
	VOLKSWAGEN	Caddy-Kombi / Golf / Jetta / Polo / Scirocco / Vento
VKC 2196	CITROËN	2 cv / Acadiane / Dyane / LN-LNA / Mehari / Visa
VKC 2202	MERCEDES	190 / 200 / 230 / 240 / 250 / 260 / 280 / 300
VKC 2213	OPEL	Ascona / Kadett / Manta
	VAUXHALL	Astra / Belmont / Cavalier
VKC 2215	OPEL	Ascona / Astra / Corsa / Kadett / Manta / Omega
		Senator / Tigra / Vectra
	VAUXHALL	Astra / Belmont / Carlton / Cavalier / Corsa / Nova
		Senator / Tigra / Vectra
VKC 2216	CITROËN	AX / Berlingo / BX / C15 / Evasion / Jumpy / Saxo / Xantia
		XM / ZX
	FIAT	Scudo / Ulysse
	PEUGEOT	106 / 205 / 306 / 309 / 405 / 406 / 605 / 806 / Expert / Partner
	ROVER	100 Series / 200 Series / 400 Series / metro
VKC 2217	ROVER	Metro / Mini
VKC 2218	SAAB	900 / 9000
VKC 2219	SEAT	Ibiza / Malaga / Ronda
VKC 2220	SEAT	Cordoba / Ibiza / Inca / Terra
	VOLKSWAGEN	Caddy-Kombi / Derby / Golf / Jetta / Polo / Vento
VKC 2232	SAAB	99 / 900
VKC 2235	VOLVO	340
VKC 2238	OPEL	Ascona / Astra / Calibra / Kadett / Vectra
	VAUXHALL	Astra / Belmont / Calibra / Cavalier / Vectra
VKC 2239	CITROËN	Jumper / XM
	FIAT	Ducato
	PEUGEOT	605 / Boxer
VKC 2240	HILLMAN	Paykan
VKC 2241	AUDI	A3
	VOLKSWAGEN	Corrado / Golf / Jetta / Passat / Polo / Transporter / Vento / Typ 4
	SEAT	Toledo
VKC 2247	LADA	Niva / Sagona / Samara

www.bergab.ru Берг АБ bergab@ya.ru Тел. (495)-228-06-21, факс (495) 223-3071

www.bergab.ru Берг АБ bergab@ya.ru Тел. (495)-228-06-21, факс (495) 223-3071

VKC 2248	LADA	VAZ
VKC 2433	RENAULT	Espace / Laguna / Megane
	VOLVO	S40 / V40
VKC 2500	FIAT	Regata
	LANCIA	Delta / Prisma
VKC 2501	ALFA ROMEO	145 / 146 / 155 / Coupe / Spider
	FIAT	Barchetta / Bravo-Brava / Coupe / Marea / Punto
		Regata / Strada-Ritmo / Tempra / Tipo / Uno
	LANCIA	Dedra / Delta / Prisma
VKC 2514	VOLVO	850
VKC 2515	SAAB	99
VKC 2519	MERCEDES	C180 / C200 / C220 / C250 / C280 / 190 / 200 / 220 / 230 /
		250 / 260 / 280 / 300 / 320
VKC 2520	MOSKVICH	
VKC 2521	ZUK	
VKC 2535	LADA	Niva / Sagona / Samara
VKC 2536	LADA	Niva / Sagona / Samara
VKC 2537	CITROËN	Evasion / Jumper / Jumpy
	FIAT	Scudo / Ulysse
	LANCIA	Zeta
	PEUGEOT	806 / Boxer / Expert
VKC 2538	ROVER	200 Series / 400 Series / 600 Series / 800 series
VKC 2539	SAAB	900
VKC 2541	OPEL	Omega
	VAUXHALL	Omega
VKC 2542	CITROËN	Xantia
	PEUGEOT	406
VKC 2546	FORD	Mondeo
VKC 2547	FORD	Escort / Fiesta / Orion
VKC 2548	FORD	Escort / Fiesta / Mondeo / Orion
VKC 2550	CHRYSLER	Le Baron / Saratoga / Voyager
	ROVER	825
VKC 2601	AUDI	A4 / A6 / A8 / 80 / 90 / 100 / CAB. / Coup / S6 / V8
	FORD	Escort / Granada / P100 / Scorpio / Sierra / Tourneo / Transit
VKC 3500	NISSAN	120Y, 130Y, 140Y, 150Y (All models) /
		180SX, 200SX (S / HS / KS / PS / US / KHS / KPS) /
		2000 DR Turbo (All models) /
		240Z, 260Z, 280Z, 280ZX, 300ZX (All models) / 710 (140J / 160J) /
		810 (160B / 180B) / A10 (140J / 160J) / Altima (A31) /
		Atlas (AF22 / AGF22) / Atlas/Condor (All models) / Auster/Stanza /
		Bluebird (WRJ / WTJ / WMJ / WPJ / WUJ 910) / C20 Series /
		Caball/Clipper/Bison / Cabstar / Caravan / Cedric / Cedric/Gloria /
		Celfiro / Cherry/Vanette / Civilian / Datsun Vanette / E20 Series / Fairlady Z /
		Gazelle / Gloria / Homer Truck - Van / Homy / (CHGE24, DHGE24)
		Homy/Caravan (All models) / Junior (140) / Junior Pickup (All models) /
		Laurel (A31) / Laurel Altima, Cefiro (A31) / Leopard (E-GF30) /
		Microbus (All models) / Navara (D21) / Pathfinder (WD21) /
		Patrol (All models) / Pick Up - Truck (All models) /
		Safari (N-VRG161 / FG161) / Silvia (E-BS12 / RBS12) /
		Skyline (VSJR 30:HR / KHR 31) / Stanza (PA11,RA11) /
		Sunny Vanette (UGJC22 / UJC22 / PGJC22 / PJC22) /
		Terrano (N-VBYD21 / WBYD21) / Terrano, Pathfinder (WD21) /
		Truck Atlas (N-MGH40 / MH40 / DMH40) / Urban (All models) /
		Urvan (E24 / GC22) / Vanette (C120) / Violet/140J, 160J, 180J

www.bergab.ru Берг АБ bergab@ya.ru Тел. (495)-228-06-21, факс (495) 223-3071

VKC 3502	DAIHATSU	4 X 4 (F80 / F85 / F87) / Charmant (A20 / 20V / 40V) / Delta (V109) / Delta 2000 (V30 / 32, / 33 / 35) / Delta 750 (KD20) / Delta Tipper (V30) / Delta Wide (TB15) / Light Bus (V32 / 34) / Taft, Rocky (F80 / 85)
	TOYOTA	Blizzard (LD10) / BUV/Tamaro/Kijan Pick Up (KF20:RF30:LF20 / 30) / Camry (E-SV12) / Carina (TA62 / 63 / 67:SA60.. / CA60 / CA67V / RA63) / Celica (AA63) / Celica GT, GTV, GTR (TA40 / 41 / 45 / 55 / 60 / 61) / Celica /Supra (E-GA61 / E-MA61 / 63) / Chaser) / Coaster / Corolla Levin (E-AE86) / Corolla/Sprinter (Levin & Trueno) (E-AE86) / Corona (AT140) / Corona MK.II/Cressida (YX76V) / Corsa (E-AL10 / E-AL12) / Cresta / Crown (E-GS120) / Dyna 150 (YY52 / YY61 / LY60) / HiAce (E-YH51G / E-YH51V) / HiLux (YN67) / Landcruiser (N-LJ71G / Q-LJ71G) / LiteAce (YM60 / YM65) / Master-Ace (E-YR20G / E-YR21G) / Model-F (YR31) / Soarer (E-GZ10 / E-GZ20 / E-MZ11 / E-MZ12) / Sprinter (E-AE86) / Stout (RK110) / Supra (MA70) / Tercel (E-AL11 / E-AL25Z) / TownAce/Model F (TR15) / ToyoAce (JY30)
VKC 3503	DAIHATSU	4 X 4 / Charmant / Consorte / Taft
	HONDA	Accord (CD, SD) / Acty (M-VH-110) / Ballade / City (E-AA100) / City Pro (L-VF100 / L-VF110 / L-VF120) / Civic (110 / 120 / 150 / 160 / 170 / 200 / 210) / Jazz/City / TN Acty / Today (JW1)
	ROVER	Triumph Acclaim
	TOYOTA	1000 Pickup / Corolla (E-AE85) / Corolla/Sprinter (Levin & Trueno) / Publica / Sprinter Trueno / Starlet
VKC 3504	DAIHATSU	Charmant / Consorte
	TOYOTA	Corolla (KE26V) / Publica / Sprinter / Starlet
VKC 3505	DAIHATSU	Charmant / Consorte / Delta 750
	ISUZU	117 Coupe / Big Horn / ELF 150 / Fargo / Florian/ Gemini / KB/LUV Pick ups (Chevrolet LUV) / Microbus / Piazza / Trooper
	MITSUBISHI	Canter / Galant / Galant Sigma/Lambda/Eterna Sigma/Sapporo / L200 (L021P) / L300 Minibus/Colt Minibus (L031PW / L032PW) / L300/Delica (LO31P) / Lancer (A75 / A72) / Pajero
	OPEL	Campo
	SUBARU	R-2 (K12 / 41) / Sambar - Pickup/Van (K 55 / 59 / 64 / 71 / 72 / 81)
	SUZUKI	LJ50, 50-2, 51, 50V-2, 80, 81 / LJ80 / SJ410 / SK408 / SK410 / ST80 / Carry / Carry/Every / Cervo / Every / Fronte Van & Hatchback / Jimny
	TOYOTA	Carina / Celica GT, GTV, LT, ST / Corolla (KE16V / KE20 / 25 / 3 / 4 / 50 / 60) / Crown / LiteAce / Starlet
VKC 3506	DAIHATSU	4 X 4 (F20) / Delta 750 / Delta Wide / Taft
	MAZDA	808,818/Grand Familia / F1000 / Pick Up/Familia Truck / Presto
	SUBARU	Leone / Leorne Car, Van & Wagon
	TOYOTA	BUV/Tamaro/Kijan Pick Up / Carina / Celica GT, GTV, LT, ST / Corona / Corona MK.II/Cressida / Crown / Dyna (JU10 / 12 / 15 / 20) / HiAce / HiLux / LiteAce / Stout / TownAce/Model F / ToyoAce
VKC 3507	FORD (EUR)	Econovan / Probe
	FORD (J)	Courier / J80 / Laser / Spectron / Telstar/Virgo
VKC 3507	MAZDA	121, 121L/Cosmo / 323 (GLC)/Familia / 616, 626/Capella / 626/Capella / 929 / 929, 929L/Luce / B Series Pick Up/Proceed/Courier / B1600, B1800, B2000, B2200 / Bongo / Capella Telstar / Cosmo / E Series/Boxer/Bongo/Titan / E1800 / E2000 / E2000, E2200 / Familia / Laser / Luce / Parkway/26 / Persona / RX 4, RX 7 / RX 5/Cosmo / T Series / T2000 / T3000
VKC 3508	HONDA	Accord / Ballade / Civic / CRX / Prelude (AB,SN) / Quint Integra (E-DA1-100 / E-DA2-100) / Vigor / Accura (AC / AD / SZ / CA1/2/3)

VKC 3509	DAIHATSU	Charade (G101 / G100 / G102) / Fellow Max, Max Coure (L38 / 38V) / Hi-Jet 55 Cab (S40 / S60) / Leeza (L111S) / Max Cuore (L40) / Mira Cuore (E-L55)3
	MITSUBISHI	Mini Cab / Minica / Minica Van, Cab, Pick Up
	SUBARU	Domingo (E-KJ5) / E Series (EF10 / EF12) / J Series (EF10 / EF12) / Justy (E-KA5) / Justy/J10 (KA 5 / 6 / 8) / L Series (EA65 / EA71 / EA81) / Leone (E-AA2 / E-AA4) / Leorne Car, Van & Wagon (AA2 / AP2 / AA / AG / AL 4) / Rex (E-KF1) / Sambar - Pickup/Van (M-KR1 / M-KT1 / M-KR2 / M-KT2)
	SUZUKI	Alto / Carry/L, ST Series / Fronte
VKC 3511	DAIHATSU	Delta 1500 / Delta 2000
	FORD (J)	Courier
	ISUZU	ELF / ELF 150 / ELF 250 / Light Bus
	MAZDA	121, 121L/Cosmo / 616, 626/Capella / 808,818/Grand Familia / 929, 929L/Luce / B Series Pick Up/Proceed/Courier / B1600, B1800 / E Series/Boxer/Bongo/Titan / E2000 / E2700, E3000 / Parkway/26 / RX 2, RX 3, RX 4, RX 5/Savanna/Cosmo / RX 5/Cosmo
	MITSUBISHI	Galant (A114 / 115 / 57C) / Galant Sigma/Lambda/Eterna Sig (A122 / A123 / A132 / A133) / Lancer/Lancer Celeste (A78M)
VKC 3512	MITSUBISHI	Rosa Bus (B217)
VKC 3513	DAIHATSU	Light Bus (DV28N)
	ISUZU	ELF 250 (TLG,TLD) / ELF 350 (KS11 / 21 / 31 / 41) / Light Bus (BE20)
	MAZDA	D1500/Craft / E Series/Boxer/Bongo/Titan / E2000 / E2700, E3000 / Parkway/26
	MITSUBISHI	Canter
	TOYOTA	Coaster (BU19) / Dyna (BU10 / BU12 / BU15) / Landcruiser (P-BJ40 / 43 / 45) / ToyoAce (JY16)
VKC 3514	MITSUBISHI	Rosa Bus
VKC 3515	HYUNDAI	Elantra / Excel / Grandeur / Pony / Scoupe / Sonata / Y-11
	MITSUBISHI	Chariot / Colt/Mirage/Mirage II / Cordia/Tredia / Diamante / Eterna / Eterna Sigma / Galant (E11A / E12A / E15A, / E14A) / Galant Sigma/Lambda/Eterna Sigma / Lancer (C12V / C14V) / Lancer Fiore (N-C14A) / Lancer-S/Wagon (C37V) / Mirage (C11V / C14V / 14W / C12V / 12W) / Space Wagon/Chariot (D02W / D03W / D04W / D05W / D08W / D09W) / Tredia (A213A / A214A / A215A)
	PROTON	Perdana (All models) / Persona / Saga / Satria / Wira
VKC 3516	TOYOTA	Camry / Carina / Celica ST, SV, SX / Celica /Supra / Corolla (N-CE80) / Corolla/Sprinter (CE80) / Corona (E-AT160 / E-ST160 / E-ST162 / N-CT150) / Corona,Carina II (N-CT150 / ST150) / MR2 / Sprinter / Vista
VKC 3519	DAIHATSU	Delta 1500 (SV17)
	NISSAN	200C - STD model ONLY / 710 / Bluebird/Bluebird Estate Wagon / Caball / Civilian / Junior / Skyline - 3 Speed, 4 Speed / Violet/140J, 160J, 180J
VKC 3520	DAIHATSU	Delta 1500 (SV17) / Micro Bus
	TOYOTA	Coaster (RU19) / Dyna (RU10 / 12 / 15) / HiAce (RH10) / HiLux (RN20 / RN25) / Stout (RK101) / ToyoAce (RY10 / 12 / 14)
VKC 3521	NISSAN	160K, 180K / Pick Up - Truck
VKC 3522	HONDA	Accord (SM / SZ) / Prelude (SM / SN) / Quint/Quint Integra (SU)
VKC 3523	DAIHATSU	Delta / Delta 2000 / Delta Tipper / Light Bus
	MITSUBISHI	Canter Cargo / Jeep / Rosa Bus

www.bergab.ru Берг АБ bergab@ya.ru Тел. (495)-228-06-21, факс (495) 223-3071

VKC 3523	TOYOTA	Coaster (BB10) / Dyna / Dyna 200 / Landcruiser (BJ40 / 42 / 45 / 60) / ToyoAce
VKC 3524	DAIHATSU	4 X 4 / Delta / Delta 2000 / Delta Tipper / Light Bus / Rocky 4x4 / Rugger / Taft / Taft, Rocky
	TOYOTA	Blizzard
VKC 3528	TOYOTA	Mini-Ace / Publica
VKC 3529	SUZUKI	Alto / Carry/L, ST Series / Cervo / Fronte / Fronte Van & Hatchback / Jimny / Mighty Boy
VKC 3530	SUBARU	Rex / Sambar - Pickup/Van
VKC 3537	ISUZU	ELF 350 / Light Bus
VKC 3538	NISSAN	Patrol
	TOYOTA	Dyna
VKC 3540	MAZDA	E Series/Boxer/Bongo/Titan / T Series / T3500 / T4100 / Titan
VKC 3542	HONDA	Ballade / City / Civic / Civic Shuttle / CRX / Jazz/City / Quint/Quint Integra
	ROVER	213
VKC 3543	MITSUBISHI	Colt/Delica / Colt/Mirage / Jeep / L300 Minibus/Colt Minibus
	TOYOTA	Coaster / Dyna / HiAce / Stout / ToyoAce
VKC 3545	MITSUBISHI	Canter / Jeep / Rosa Bus
VKC 3548	DAIHATSU	Delta (V118)
	TOYOTA	Coaster (FB30 / HB30) / Dyna / Dyna 200 / Landcruiser (BJ71) / ToyoAce (BU66 / BU66D)
VKC 3549	NISSAN	Cherry/Cherry Coupe (E10 / KE10)
VKC 3550	NISSAN	Cherry 100A, F-II / Cherry 120A, 140A, -II / F10 / Langley / N10
VKC 3551	NISSAN	Be-1 (BK10) / March, Micra (K10) / Pao (PK10)
VKC 3552	HYUNDAI	Pony / Stellar/Sonata
	MITSUBISHI	Delica / Forte (L-L025P) / Galant (A161) / Galant Sigma/Lambda/Eterna Sig (A161) / L200 (K01T / K11T) / L300 / L300 Minibus/Colt Minibus / L300/Delica / Lancer / Lancer/Lancer Celeste / Sapporo (A161)
VKC 3553	ISUZU	Aska (E-JJ110, E-JJ120,N-JJ510) / Gemini (JT69, JT77) / Panero (JT191F)
VKC 3554	ISUZU	Chevrolet Luv / Fargo / Faster / Piazza, XS / Rodeo/Faster
	OPEL	Campo
VKC 3555	NISSAN	Ad Van / Auster/Stanza / Bluebird / Langley / Laurel Spirit / Liberta Villa / NX Coupe / Prairie / Presea / Pulsar / Pulsar Ad Van (VHB11) / Sentra (E-T12) / Sunny (B12)
VKC 3556	TOYOTA	Carina (E-AT150 / E-AT151) / Celica GT (AT160) / Corolla (AE80E) / Corolla/Sprinter (EE80) / Corona (AT150) / Corona,Carina II (AT151) / Corsa / MR2 / Sprinter / Starlet / Tercel / Paseo
VKC 3558	DAEWOO	Elf II
	ISUZU	ELF / ELF 350 (NPR) / Light Bus (BL36-46)
VKC 3559	HYUNDAI	Mighty - 3 ton truck
	MITSUBISHI	Canter / Pajero (L141G, 141GW / 146GW) / Pajero/Montero (L146GW) / Rosa Bus
VKC 3560	NISSAN	Ad Van / Auster/Stanza / Bluebird (E-RU11) / Langley / Laurel Spirit (SB11) / Liberta Villa / March (K10) / Prairie (BM10 / VBM10) / Pulsar (RSN12) / Sentra (B11) / Silvia / Stanza (E-T12) / Sunny (B11) / Sunny Ad Van / Sunny California / Violet/140J, 160J, 180J
VKC 3562	MITSUBISHI	Mini Cab / Minica / Minica Econo / Minica Van, Cab, Pick Up
VKC 3563	DAIHATSU	Atrai / Hi-Jet / Hi-Jet 55 Cab
VKC 3564	DAEWOO	Damas/Labo
	SUZUKI	Carry/L, ST Series (M-ST31 / 91) / Cultus (AJ14S / AF34S / AH14S) / Escudo (TA01R / TA01V / TA01W) / Jimny (E-JA51) / Swift (SJ413) / Vitara (SE416)

www.bergab.ru Берг АБ bergab@ya.ru Тел. (495)-228-06-21, факс (495) 223-3071

VKC 3565	NISSAN	2000 SX / Altima (A31) / Bluebird (910) / Cedric / Celfiro / Civilian / Fairlady Z / Gloria / Langley (FC33) / Laurel (A31) / Laurel Altima, Cefiro (A31) / Skyline (E-FJR31)
VKC 3567	SUZUKI	Alto (M-CC71V) / Cervo (CP31S) / Cultus (AA33S / AB33S) / Cultus/Swift / Fronte (E-CP11S) / Swift (SA413)
VKC 3568	FORD (J) MAZDA	Laser 323 (323 (GLC) / Familia Station Wagon (BF5W) / Familia (E-BD1031 / E-BD1051) / Laser (E-BE5PF)
VKC 3570	FORD (J) MAZDA	J80 Bongo (L-SS48V) / E Series/Boxer/Bongo/Titan (L-SS48V) / E1300 / E1400
VKC 3572	MAZDA	616, 626/Capella (CB2NS / CB2NA) / E Series/Boxer/Bongo/Titan (SD89T)
VKC 3574	ISUZU	ELF
VKC 3575	TOYOTA	Coaster (HB30) / Landcruiser (P-HJ60 / P-HJ61) / ToyoAce (P-WU75 / 90 / 95)
VKC 3577	HONDA ROVER	Accord (CB3 / CB4 / CB1) / Ascot (CB1 / CB2 / CB4 / CB3) / Legend / Prelude 620 / 623 / 827
VKC 3578	DAIHATSU	Applause (A101) / Charade (E-G100S) / Innocenti (Minitre)
VKC 3579	HYUNDAI MITSUBISHI	Grace (Porter - 1 ton Truck) Delica (L039P / P25W) / L200 (K04T) / L300/Delica / Pajero (L044G) / Pajero/Montero/Shogun
VKC 3581	NISSAN	Bluebird (N-VEU11) / Bluebird Maxima / Caravan / Homy / Homy/Caravan / Maxima / Navara (D21) / Pathfinder (WD21) / Pickup (D21) / Pulsar (RNN14) / Terrano, Pathfinder (WD21) / Urban (All models) / Urvan (E24)
VKC 3582	SUBARU	Alcyone / L Series / Leone / Leorne Car, Van & Wagon / XT
VKC 3584	TOYOTA	Camry (E-SV25) / Carina (E-AT175) / Celica (ST165) / Celica GT (E-ST185) / Corolla (AE95) / Corolla/Sprinter (Levin & Trueno) (E-AE92) / Corona (E-AT175) / MR2 (E-AW10 / E-AW11) / Sprinter (E-AE92) / RAV-4
VKC 3587	MITSUBISHI	Canter
VKC 3588	DAIHATSU	Feroza (F300 / F310) / Hi-Jet (M-S75 / M-S70) / Hi-Jet Atrai (S82C / P / V) / Hi-Jet Cab (S80 / 81)
VKC 3590	HONDA	TN-7
VKC 3591	MAZDA	Porter Cab (M-PC56)
VKC 3592	HYUNDAI MITSUBISHI	Pony2 Delica (E-L035PW) / Eterna Sigma/Lambda (E-A162A / E-A164A) / Forte (L-L026G) / Galant (A163) / Galant Sigma/Lambda/Eterna Sigma/Sapporo (A163.. / A164 / A167A) / L200 (K02T / K12T / K22T / K32T) / L300 Minibus/Colt Minibus / L300/Delica / Lancer/Lancer Celeste / Pajero / Pajero/Montero / Pajero/Montero/Shogun / Rosa Bus / Sapporo / Starion
VKC 3594	NISSAN	Cherry 100A
VKC 3595	NISSAN	Cherry 100A, F-II
VKC 3598	NISSAN	Auster/Stanza / Bluebird (VEU11) / Laurel Spirit - only RS5F310A trans. (E-EB12,E-FB12) / Prairie (E-HNM10) / Pulsar (RHN13) / Pulsar EXA (KN13) / Sentra (B12) / Skyline (PJR31 / WPJR31) / Stanza (T12) / Sunny (EB12)
VKC 3599	NISSAN	Pulsar (N12)
VKC 3600	FORD (J) KIA	Laser Capital (B5) / Concord (F8) / Facelift (F8) / Siemens (F8)

VKC 3600	MAZDA	323 (B6) / 323 (GLC)/Familia Turbo (BFMP(DOHC)) / 616, 626/Capella (GC6P) / 626 (RF) / 929, 929L/Luce (HCEP) / B2600 / Bongo Brawny / E Series/Boxer/Bongo/Titan / E1800 / E2000 / Familia / Laser / Luce (E-HCEP) / Parkway/26 (WVL4B) / RX 7/Savanna (FC3C / FC3S) / T Series / T2500, T3000, T3500 / T2600 / Titan
VKC 3602	MAZDA	121 (DA13 / BF10) / 323 (B3 / B6, BP) / Familia (BW7W) / Festiva / Laser (BG3PF)
VKC 3603	HONDA	Civic (AR) / Civic Shuttle (EE4) / Concerto (MA3)
VKC 3605	HONDA	Accord (CA3) / (EF9) / CRX (EF8) / Integra (DA6 / DA8) / Prelude (AB) / Vigor
VKC 3606	ISUZU OPEL	Big Horn / ELF / Fargo / Faster / MU / Rodeo / Rodeo/Faster / Trooper Frontera / Monterey
VKC 3607	MAZDA	323 / Etude / Familia / Laser
VKC 3609	KIA	Avella (B3)
VKC 3610	NISSAN	Bluebird (U12) / Cabstar (F22) / Cedric (Y31) / Datsun Truck / PD21, PGD21(Navara) (D21) / Pickup (D21) / Prairie (M11)
VKC 3611	NISSAN	Bluebird (E-RU12) / Bluebird Wagon (U11) / Prairie (E-M11) Pulsar EXA (KN13) / Pulsar NX (KN13) / Sentra (B12) / Stanza (T12) / Sunny (N13)
VKC 3612	NISSAN	Patrol (Y60) / Safari (Y60)
VKC 3613	SUBARU	Legacy (BC3, BF3)
VKC 3614	TOYOTA	Celica /Supra / Supra (JZA70)
VKC 3615	TOYOTA VOLKSWAGEN	4 Runner / Chaser / Corona MK.II/Cressida / Cressida / Cresta / Crown / Dyna / Dyna 150 (LY61) / HiAce (LH100G / LH102V) / HiLux (RN80 / 85 LN80, / 85, / 90) / Landcruiser (RJ70 / LJ70) / Stout (YK110) / ToyoAce (M-YY51) Taro
VKC 3616	TOYOTA VOLKSWAGEN	Chaser (GX81) / Corona MK.II/Cressida (E-GX70G) / Cressida (GX81 / MX81) / Cresta / Crown / Dyna 100 / HiAce / HiLux / LiteAce / Master-Ace / Model-F / Soarer / Supra / TownAce (CM50) / Previa Taro
VKC 3617	HONDA ROVER	Civic (ED6 / ED7 / CD3 / CD4) / CRX (ED9) / Quint/Quint Integra (E-DA5-100 / E-DA7-100) Maestro / Montego
VKC 3618	HONDA	Acty (HA1 / HA2 / HH1, / HH2) / Today (JA1 / JW2)
VKC 3619	MAZDA	Eunos Roadster (NA6CE) / MX5 (NA)
VKC 3622	TOYOTA	Corolla/Sprinter 4DS LX,SEL (E-AE100 / E-AE101)
VKC 3623	SUZUKI	Cultus (E-AA43V / E-AB43S) / Swift (SF413)
VKC 3625	TOYOTA	Camry (E-SV30 / E-SV32 / E-SV33 / E-CV30) / Celica (ST180 / 181 / ST182,183) / Corolla (N-CE90, N-CE96V / N-CE97G) / Corona (E-ST170 / 171 / CT170 / CT176V) / Vista (N-CV30 / E-SV30)
VKC 3626	TOYOTA	Crown (LS131)
VKC 3627	TOYOTA	Landcruiser (HDJ80)
VKC 3628	TOYOTA	HiLux (LN106 / 111)
VKC 3629	SUBARU	Rex (KH4 / KP4) / Sambar - Pickup/Van(KS3 / KS4 / KV3 / KV4)
VKC 3630	ISUZU	Trooper (UBS)
VKC 3631	ISUZU	ELF 350 (Manual Transmission) (NPR57 / 59)
VKC 3640	TOYOTA	Supra (MA70)
VKC 3641	NISSAN	Bluebird (TSU12)
VKC 3642	TOYOTA	Dyna (BU72D / BU72DH / BU72H) / ToyoAce (BU74)
VKC 3643	TOYOTA	Coaster (BB23 / 24) / Dyna / ToyoAce
VKC 3644	TOYOTA	ToyoAce (WU75D)
VKC 3645	TOYOTA	Landcruiser (HD380)

VKC 3646	TOYOTA	Coaster (HDB30 / HDB31)
VKC 3647	TOYOTA	Coaster (HZB50)
VKC 3648	TOYOTA	Coaster (BB21)
VKC 3649	TOYOTA	Landcruiser (fzj80)
VKC 3650	TOYOTA	ToyoAce (WU85)
VKC 3651	NISSAN	Pimera (P10E)
VKC 3652	MITSUBISHI	GTO (Z15A)
VKC 3654	HONDA	Civic (EG3)
VKC 3659	MAZDA	RX 7/Savanna (FD01 / 02 / 03 / 04 / 05)
VKC 3660	SUBARU	Legacy (SW)
VKC 3661	MITSUBISHI	Fuso
VKC 3665	TOYOTA	Landcruiser
VKC 3666	HYUNDAI	Elantra / Accent
VKC 3668	PERODUA	Kancil

www.bergab.ru Берг АБ bergab@ya.ru Тел. (495)-228-06-21, факс (495) 223-3071

www.bergab.ru Берг АБ bergab@ya.ru Тел. (495)-228-06-21, факс (495) 223-3071

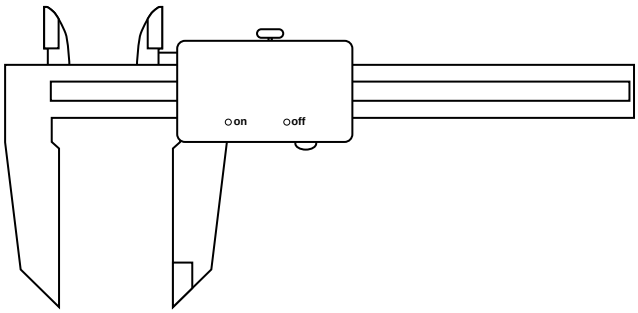

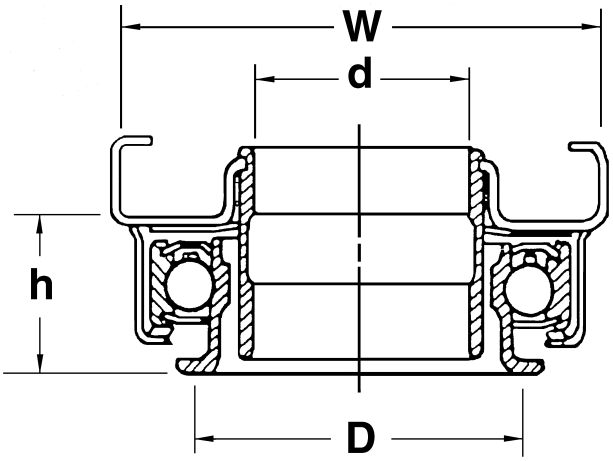

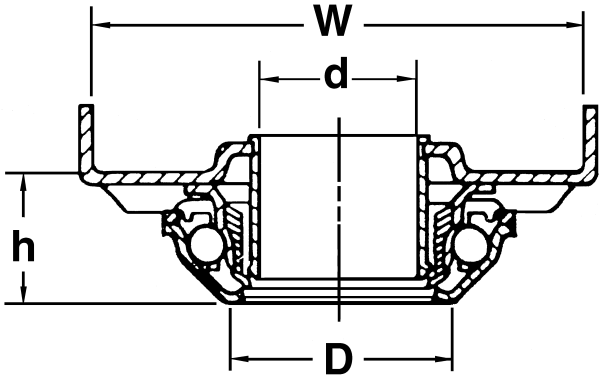

→ d..... 94-95

d → 96-97

www.bergab.ru Берг АБ bergab@ya.ru Тел. (495)-228-06-21, факс (495) 223-3071

	d	D	h	W	
VKC 1000	34.1	34.1 / 60	16	72	D1
VKC 2025	33	33	18	71.5	D1
VKC 2045	34	42 / 56	24.2	37.9	D2
VKC 2051	33	39.5	24	66	D10
VKC 2054	25	36 / 50	21	36	D2
VKC 2064	26.5	39.5	33.5	30.7	D31
VKC 2065	32	42 / 56	22.5	39.6	D32
VKC 2080	23.5	34	24	50	D10
VKC 2083	27.1	35 / 59	26.4	32	D2
VKC 2091	34	44	14.5	72	D3
VKC 2095	23.5	34	26	82.2	D10
VKC 2104	32	51	29.5	40	D24
VKC 2108	24	34	19.8	74	D3
VKC 2111	48	64	23.2	81.3	D11
VKC 2113	24.2	34	28.6	57	D4
VKC 2114	23.7	34	22	36	D4
VKC 2115	30	39.5	27.2	64.4	D11
VKC 2120	38.2	42 / 65	25	46	D2
VKC 2123	23.7	34	24	62	D11
VKC 2125	23.6	34	13.5	57.3	D3
VKC 2144	33.8	42 / 56	21.8	49.4	D33
VKC 2146	34	50	36.7	79.3	D4
VKC 2150	32	39.5	26	75.9	D10
VKC 2151	38.2	46 / 65.5	30	46	D2
VKC 2161	29.8	39.5	26.6	90.6	D11
VKC 2163	29.7	42 / 56	21.8	49.4	D33
VKC 2164	33.8	42 / 56	30.7	49.4	D33
VKC 2168	28	39.5	25.8	90.2	D10
VKC 2169	33	39.5	24	101	D11
VKC 2170	35.7	45 / 65	24.5	41	D27
VKC 2183	23.5	34	17.8	29.5	D24
VKC 2186	35	50	19.3	41.4	D24
VKC 2189	30	39.5	25.5	79.5	D10
VKC 2190	30	39.5	20.2	100	D11
VKC 2191	26	34	19.6	29.8	D24
VKC 2192	25.4	39.5	44.5	100	D6
VKC 2193	24.1	34	20.1	68	D10
VKC 2194	25.4	39.5	20.3	100	D6
VKC 2195		28	7.5		D28
VKC 2196	25	34	22	36	D4
VKC 2202	34	50	25.4	37.9	D14
VKC 2213	38.2	50	18	46	D24
VKC 2215	35	42 / 56	18.2	41.4	D32
VKC 2216	24	34	20.5	61.4	D10
VKC 2217		34			D29
VKC 2218		51	13.5	46	D30
VKC 2219	28	39.5	37.7	90.2	D10
VKC 2220	23.6	34	12	64	D3
VKC 2232	40	51			D9
VKC 2235	29.4	39.5	67.5	34	D31
VKC 2238	38.2	42 / 56	16.8	46	D32
VKC 2239	26.6	39.5	34	71	D10

	d	D	h	W	
VKC 2240	35	42 / 56	29.6	78.8	D1
VKC 2241	31	46	22.3	41.5	D2
VKC 2247	25.6	36 / 50	16.8	78.1	D7
VKC 2248	26	39.5	36.9	37	D14
VKC 2432	27.7	42 / 56	13	84.3	D7
VKC 2433	26	34	17.5	30	D24
VKC 2500	28	39.5	47.2	90.2	D10
VKC 2501	28	39.5	40.2	90.2	D10
VKC 2514	30	42 / 56	24.3	66.2	D7
VKC 2515	33	52	22.8	40	D24
VKC 2519	34	42 / 56	23.8	45.4	D33
VKC 2520	31.2	39.5	24	69.2	D11
VKC 2521	52.4	59 / 80	18	78	D15
VKC 2535	25.6	34	13.1	78.1	D21
VKC 2536	25.6	34	20.1	78	D21
VKC 2537	26.6	39.5	25.5	71	D10
VKC 2538	35	42 / 59	20.9	58	D7
VKC 2539		47.4 / 56	14	64.6	D30
VKC 2541		42 / 56	13.5	47	D30
VKC 2542	26.5			64.3	D8
VKC 2546	34	42 / 56	33.8	90.6	D7
VKC 2547	32.3	39.5	26.6	90.6	D11
VKC 2548	34	42 / 56	21.5	90.6	D7
VKC 2550	30.5	51	19	47.3	D26
VKC 2601	34	42 / 56	23.9	46.1	D33
VKC 3500	40	62	19	75	D9
VKC 3502	40	50	20	67	D9
VKC 3503	33	46	15	60	D9
VKC 3504	33	-	17	60	D9
VKC 3505	38	52	16	67	D9
VKC 3506	40	51	16	64	D9
VKC 3507	36	54	27	77	D10
VKC 3508	31	55	23	53	D11
VKC 3509	35	44	14	57	D9
VKC 3511	45	55	18	74	D9
VKC 3512	80	-	27	128	D12
VKC 3513	45	-	16	73	D12
VKC 3514	55	-	20	88	D12
VKC 3515	32	48	21	60	D11
VKC 3516	35	60	25	76	D11
VKC 3519	40	-	18	70	D12
VKC 3520	40	-	14	64	D12
VKC 3521	40	44	18	67	D9
VKC 3522	35	61	17	70	D13
VKC 3523	45	58	23	77	D9
VKC 3524	35	54	34	57	D14
VKC 3525	55	-	16	82	D15
VKC 3526	55	-	16	88	D15
VKC 3527	65	-	22	102	D12
VKC 3528	28	-	13	50	D12
VKC 3529	28	42	14	50	D9
VKC 3530	30	45	13	48	D13

	d	D	h	W	
VKC 3531	31	41	19	57	D9
VKC 3536	35	56	18	64	D9
VKC 3537	45	62	18	74	D9
VKC 3538	52	-	20	97	D12
VKC 3540	55	68	22	88	D9
VKC 3541	70	-	27	117	D12
VKC 3542	29	47	21	50	D11
VKC 3543	38	-	16	67	D1 2
VKC 3545	45	-	19	77	D12
VKC 3546	60	-	22	97	D12
VKC 3548	45	66	23	77	D9
VKC 3549	30	-	16	62	D16
VKC 3550	3	-	16	47	D16
VKC 3551	28	38	10	62	D2
VKC 3552	32	48	35	46	D22
VKC 3553	32	48	17	56	D17
VKC 3554	37	48	20	-	D18
VKC 3555	33	48	13	68	D2
VKC 3556	33	50	22	70	D11
VKC 3558	40	54	24	-	D18
VKC 3559	37	58	31	56	D22
VKC 3560	33	62	13	68	D2
VKC 3562	28	44	21	40	D22
VKC 3563	28	44	25	40	D19
VKC 3564	33	50	22	75	D11
VKC 3565	40	62	22	-	D18
VKC 3566	55	-	19	86	D15
VKC 3567	28	44	22	59	D11
VKC 3568	33	50	25	77	D10
VKC 3570	33	50	25	75	D19
VKC 3572	36	54	27	82	D19
VKC 3573	38	68	49	50	D20
VKC 3574	43	87	24	-	D18
VKC 3575	52	68	26	92	D9
VKC 3576	30	38	13	48	D9
VKC 3577	35	55	24	72	D10
VKC 3578	28	44	22	45	D4
VKC 3579	32	55	27	46	D20
VKC 3581	33	62	20	68	D20
VKC 3582	33	62	23	68	D21
VKC 3584	36	60	25	79	D11
VKC 3587	47	68	49	68	D22
VKC 3588	28	45	23	44	D19
VKC 3590	20	46	15	50	D13
VKC 3591	25	38	19	43	D22
VKC 3592	32	55	32	46	D22
VKC 3594	15	-	2	28	D23
VKC 3595	20	-	14	47	D16
VKC 3598	33	62	18	68	D2

	d	D	h	W	
VKC 3599	33	50	15	68	D2
VKC 3600	36	54	24	77	D10
VKC 3602	29.2	47	21.04	37.79	D24
VKC 3603	34.9	47	24	58	D11
VKC 3605	35	55	24	58	D11
VKC 3606	42.13	60	18.92	-	D18
VKC 3607	33.37	50	24.94	70.21	D10
VKC 3609	29	47	21	38	D24
VKC 3610	33.15	62	23.81	67.86	D2
VKC 3611	33.08	48	21.74	67.91	D2
VKC 3612	39.96	62	19	67.99	D13
VKC 3613	33.41	62	25.32	68.62	D21
VKC 3614	45.5	80	19	88.1	D25
VKC 3615	35.24	50	30.04	44.08	D26
VKC 3616	35.23	50	33.64	44.1	D26
VKC 3617	31.2	47	22.57	53	D11
VKC 3618	29.3	47	18.52	56.3	D11
VKC 3619	33.39	44	24.52	70.22	D10
VKC 3621	42	62	24	-	D18
VKC 3622	33	50	22	79	D11
VKC 3623	28	52	22	56	D11
VKC 3625	35	60	25	79	D11
VKC 3626	35	50	27	44	D26
VKC 3627	38	68	47	48	D26
VKC 3628	35	50	24	44	D26
VKC 3629	28	44	23	37	D26
VKC 3630	35	48	25	-	D18
VKC 3631	54	-	23	-	D18
VKC 3640	35	50	34	44	D26
VKC 3641	33	62	16	68	D2
VKC 3642	35	68	27	44	D26
VKC 3643	35	68	30	44	D26
VKC 3644	38	68	34	48	D26
VKC 3645	38	68	53	48	D26
VKC 3646	35	68	53	48	D26
VKC 3647	38	68	52	48	D26
VKC 3648	35	58	33	44	D26
VKC 3649	38	68	37	48	D26
VKC 3650	35	68	33	44	D26
VKC 3651	33	62	16	68	D2
VKC 3652	30	56	13	90	D10
VKC 3654	31	47	23	68	D10
VKC 3659	33	-	29	68	D10
VKC 3660	22	44	29	39	D26
VKC 3661	62	-	21	97	D12
VKC 3665	35	58	48	46	D26
VKC 3666	32	48	23	46	D26
VKC 3668	28.1	44	22	35	D26

d	D	h	W		
	28	7.5		**VKC 2195**	D28
	34			**VKC 2217**	D29
	51	13.5	46	**VKC 2218**	D30
	47.4 / 56	14	64.6	**VKC 2539**	D30
	42 / 56	13.5	47	**VKC 2541**	D30
3	-	16	47	**VKC 3550**	D16
15	-	2	28	**VKC 3594**	D23
20	46	15	50	**VKC 3590**	D13
20	-	14	47	**VKC 3595**	D15
22	44	29	39	**VKC 3660**	D26
23.5	34	24	50	**VKC 2080**	D10
23.5	34	26	82.2	**VKC 2095**	D10
23.5	34	17.8	29.5	**VKC 2183**	D24
23.6	34	13.5	57.3	**VKC 2125**	D3
23.7	34	22	36	**VKC 2114**	D4
23.7	34	24	62	**VKC 2123**	D11
23.6	34	12	64	**VKC 2220**	D3
24	34	19.8	74	**VKC 2108**	D3
24	34	20.5	61.4	**VKC 2216**	D10
24.1	34	20.1	68	**VKC 2193**	D10
24.2	34	28.6	57	**VKC 2113**	D24
25	36 / 50	21	36	**VKC 2054**	D2
25	34	22	36	**VKC 2196**	D4
25	38	19	43	**VKC 3591**	D22
25.4	39.5	44.5	100	**VKC 2192**	D6
25.4	39.5	20.3	100	**VKC 2194**	D6
25.6	36 / 50	16.8	78.1	**VKC 2247**	D7
25.6	34	13.1	78.1	**VKC 2535**	D21
25.6	34	20.1	78	**VKC 2536**	D21
26	34	19.6	29.8	**VKC 2191**	D24
26	39.5	36.9	37	**VKC 2248**	D14
26	34	17.5	30	**VKC 2433**	D24
26.5			64.3	**VKC 2542**	D8
26.5	39.5	33.5	30.7	**VKC 2064**	D31
26.6	39.5	34	71	**VKC 2239**	D10
26.6	39.5	25.5	71	**VKC 2537**	D10
27.1	35 / 59	26.4	32	**VKC 2083**	D2
27.7	42 / 56	13	84.3	**VKC 2432**	D7
28	39.5	25.8	90.2	**VKC 2168**	D10
28	39.5	37.7	90.2	**VKC 2219**	D10
28	39.5	47.2	90.2	**VKC 2500**	D10
28	39.5	40.2	90.2	**VKC 2501**	D10
28	-	13	50	**VKC 3528**	D12
28	42	14	50	**VKC 3529**	D9
28	38	10	62	**VKC 3551**	D2
28	44	21	40	**VKC 3562**	D22
28	44	25	40	**VKC 3563**	D19
28	44	22	59	**VKC 3567**	D11
28	44	22	45	**VKC 3578**	D4
28	45	23	44	**VKC 3588**	D19
28	52	22	56	**VKC 3623**	D11
28	44	23	37	**VKC 3629**	D26

d	D	h	W		
28.1	44	22	35	**VKC 3668**	D26
29	39.5	67.5	34	**VKC 2235**	D31
29	47	21	50	**VKC 3542**	D11
29	47	21	38	**VKC 3609**	D24
29.2	47	21.04	37.79	**VKC 3602**	D24
29.3	47	18.52	56.3	**VKC 3618**	D11
29.7	42 / 56	21.8	49.4	**VKC 2163**	D33
29.8	39.5	26.6	90.6	**VKC 2161**	D11
30	39.5	27.2	64.4	**VKC 2115**	D11
30	39.5	25.5	79.5	**VKC 2189**	D10
30	39.5	20.2	100	**VKC 2190**	D11
30	42 / 56	24.3	66.2	**VKC 2514**	D7
30	45	13	48	**VKC 3530**	D13
30	-	16	62	**VKC 3549**	D16
30	38	13	48	**VKC 3576**	D9
30	56	13	90	**VKC 3652**	D10
30.5	51	19	47.3	**VKC 2550**	D26
31	46	22.3	41.5	**VKC 2241**	D2
31	55	23	53	**VKC 3508**	D11
31	41	19	57	**VKC 3531**	D9
31	47	23	68	**VKC 3654**	D10
31.2	39.5	24	69.2	**VKC 2520**	D11
31.2	47	22.57	53	**VKC 3617**	D11
32	42 / 56	22.5	39.6	**VKC 2065**	D32
32	51	29.5	40	**VKC 2104**	D24
32	39.5	26	75.9	**VKC 2150**	D10
32	48	21	60	**VKC 3515**	D11
32	48	35	46	**VKC 3552**	D22
32	48	17	56	**VKC 3553**	D17
32	55	27	46	**VKC 3579**	D20
32	55	32	46	**VKC 3592**	D22
32	48	23	46	**VKC 3666**	D26
32.3	39.5	26.6	90.6	**VKC 2547**	D11
33	33	18	71.5	**VKC 2025**	D1
33	39.5	24	66	**VKC 2051**	D10
33	39.5	24	101	**VKC 2169**	D11
33	52	22.8	40	**VKC 2515**	D24
33	46	15	60	**VKC 3503**	D9
33	-	17	60	**VKC 3504**	D9
33	48	13	68	**VKC 3555**	D2
33	50	22	70	**VKC 3556**	D11
33	62	13	68	**VKC 3560**	D2
33	50	22	75	**VKC 3564**	D11
33	50	25	77	**VKC 3568**	D10
33	50	25	75	**VKC 3570**	D19
33	62	20	68	**VKC 3581**	D20
33	62	23	68	**VKC 3582**	D21
33	62	18	68	**VKC 3598**	D2
33	50	15	68	**VKC 3599**	D2
33	50	22	79	**VKC 3622**	D11
33	62	16	68	**VKC 3641**	D2
33	62	16	68	**VKC 3651**	D2

d	D	h	W		
33	-	29	68	**VKC 3659**	D10
33.08	48	21.74	67.91	**VKC 3611**	D2
33.15	62	23.81	67.86	**VKC 3610**	D2
33.37	50	24.94	70.21	**VKC 3607**	D10
33.39	44	24.52	70.22	**VKC 3619**	D10
33.41	62	25.32	68.62	**VKC 3613**	D21
33.8	42 / 56	21.8	49.4	**VKC 2144**	D33
33.8	42 / 56	30.7	49.4	**VKC 2164**	D33
34	42 / 56	24.2	37.9	**VKC 2045**	D2
34	44	14.5	72	**VKC 2091**	D3
34	50	36.7	79.3	**VKC 2146**	D4
34	50	25.4	37.9	**VKC 2202**	D14
34	42 / 56	23.8	45.4	**VKC 2519**	D33
34	42 / 56	33.8	90.6	**VKC 2546**	D7
34	42 / 56	21.5	90.6	**VKC 2548**	D7
34	42 / 56	23.9	46.1	**VKC 2601**	D33
34.1	34.1 / 60	16	72	**VKC 1000**	D1
34.9	47	24	58	**VKC 3603**	D11
35	42 / 56	18.2	41.4	**VKC 2215**	D32
35	50	19.3	41.4	**VKC 2186**	D24
35	42 / 56	29.6	78.8	**VKC 2240**	D1
35	42 / 59	20.9	58	**VKC 2538**	D7
35	44	14	57	**VKC 3509**	D9
35	60	25	76	**VKC 3516**	D11
35	61	17	70	**VKC 3522**	D13
35	54	34	57	**VKC 3524**	D14
35	56	18	64	**VKC 3536**	D9
35	55	24	72	**VKC 3577**	D10
35	55	24	58	**VKC 3605**	D11
35	60	25	79	**VKC 3625**	D11
35	50	27	44	**VKC 3626**	D26
35	50	24	44	**VKC 3628**	D26
35	48	25	-	**VKC 3630**	D18
35	50	34	44	**VKC 3640**	D26
35	68	27	44	**VKC 3642**	D26
35	68	30	44	**VKC 3643**	D26
35	68	53	48	**VKC 3646**	D26
35	58	33	44	**VKC 3648**	D26
35	68	33	44	**VKC 3650**	D26
35	58	48	46	**VKC 3665**	D26
35.23	50	33.64	44.1	**VKC 3616**	D26
35.24	50	30.04	44.08	**VKC 3615**	D26
35.7	45 / 65	24.5	41	**VKC 2170**	D27
36	54	27	77	**VKC 3507**	D10
36	54	27	82	**VKC 3572**	D19
36	54	24	77	**VKC 3600**	D10
36	60	25	79	**VKC 3584**	D11
37	48	20	-	**VKC 3554**	D18
37	58	31	56	**VKC 3559**	D22

d	D	h	W		
38	52	16	67	**VKC 3505**	D9
38	-	16	67	**VKC 3543**	D12
38	68	49	50	**VKC 3573**	D20
38	68	47	48	**VKC 3627**	D26
38	68	34	48	**VKC 3644**	D26
38	68	53	48	**VKC 3645**	D26
38	68	52	48	**VKC 3647**	D26
38	68	37	48	**VKC 3649**	D26
38.2	42 / 65	25	46	**VKC 2120**	D2
38.2	46 / 65.5	30	46	**VKC 2151**	D2
38.2	50	18	46	**VKC 2213**	D24
38.2	42 / 56	16.8	46	**VKC 2238**	D32
39.96	62	19	67.99	**VKC 3612**	D13
40	51			**VKC 2232**	D9
40	62	19	75	**VKC 3500**	D9
40	50	20	67	**VKC 3502**	D9
40	51	16	64	**VKC 3506**	D9
40	-	18	70	**VKC 3519**	D12
40	-	14	64	**VKC 3520**	D12
40	44	18	67	**VKC 3521**	D9
40	54	24	-	**VKC 3558**	D18
40	62	22	-	**VKC 3565**	D18
42	62	24	-	**VKC 3621**	D18
42.13	60	18.92	-	**VKC 3606**	D18
43	87	24	-	**VKC 3574**	D18
45	55	18	74	**VKC 3511**	D9
45	-	16	73	**VKC 3513**	D12
45	58	23	77	**VKC 3523**	D9
45	62	18	74	**VKC 3537**	D9
45	-	19	77	**VKC 3545**	D12
45	66	23	77	**VKC 3548**	D9
45.5	80	19	88.1	**VKC 3614**	D25
47	68	49	68	**VKC 3587**	D22
48	64	23.2	81.3	**VKC 2111**	D11
52	-	20	97	**VKC 3538**	D12
52	68	26	92	**VKC 3575**	D9
52.4	59 / 80	18	78	**VKC 2521**	D15
54	-	23	-	**VKC 3631**	D18
55	-	20	88	**VKC 3514**	D12
55	-	16	82	**VKC 3525**	D15
55	-	16	88	**VKC 3526**	D15
55	68	22	88	**VKC 3540**	D9
55	-	19	86	**VKC 3566**	D15
60	-	22	97	**VKC 3546**	D12
62	-	21	97	**VKC 3661**	D12
65	-	22	102	**VKC 3527**	D12
70	-	27	117	**VKC 3541**	D12
80	-	27	128	**VKC 3512**	D12

www.bergab.ru Берг АБ bergab@ya.ru Тел. (495)-228-06-21, факс (495) 223-3071

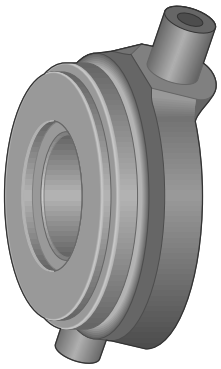

D1

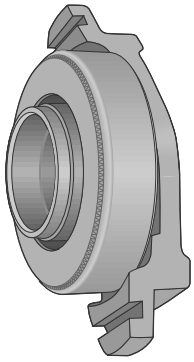

D2

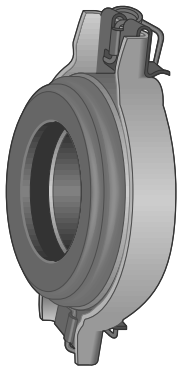

D3

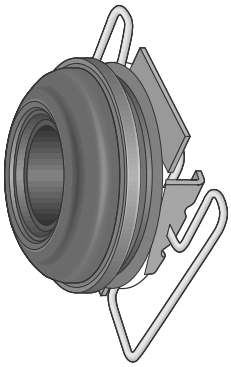

D4

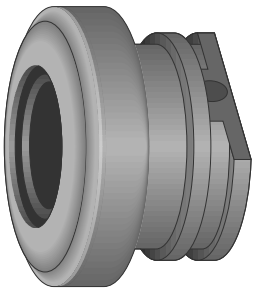

D5

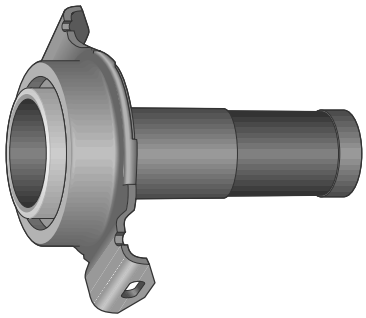

D6

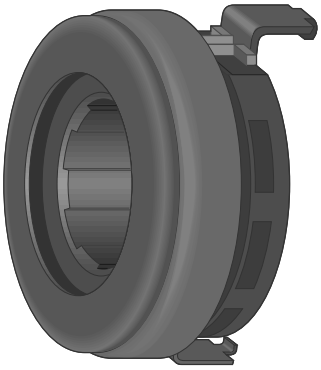

D7

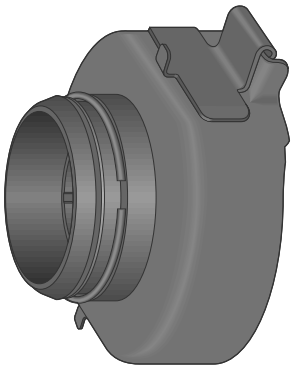

D8

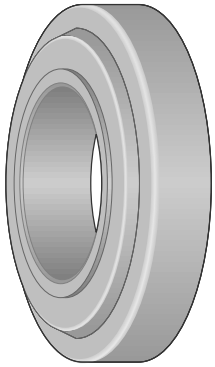

D9

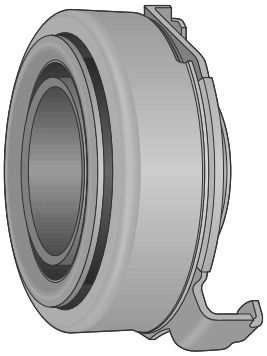

D10

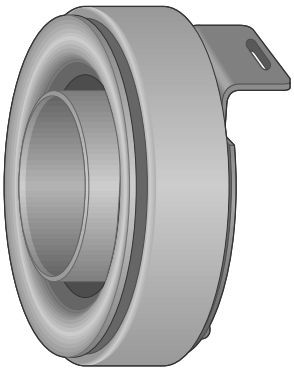

D11

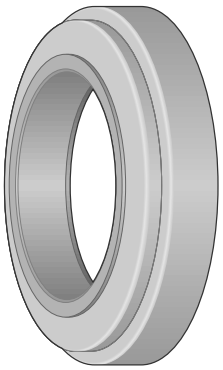

D12

www.bergab.ru Берг АБ bergab@ya.ru Тел. (495)-228-06-21, факс (495) 223-3071

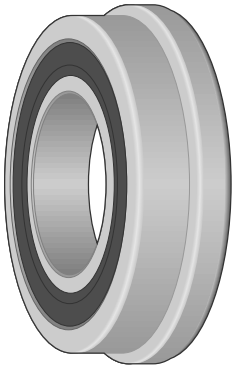

D13

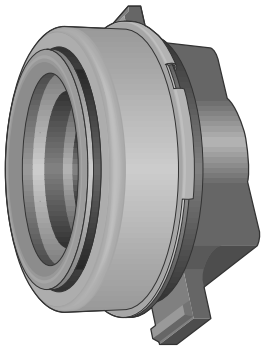

D14

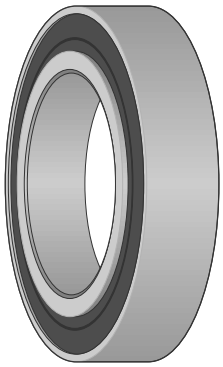

D15

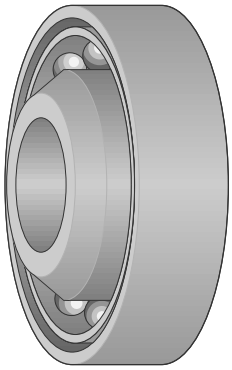

D16

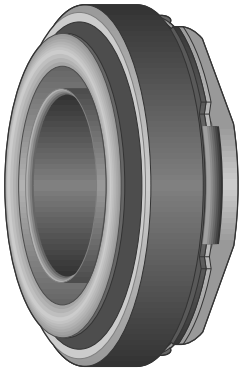

D17

D18

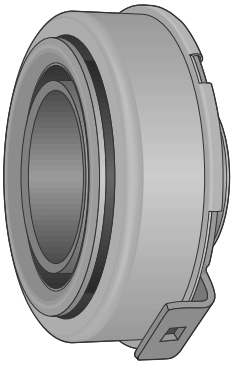

D19

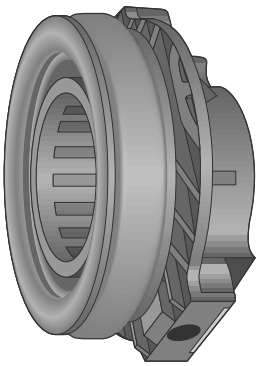

D20

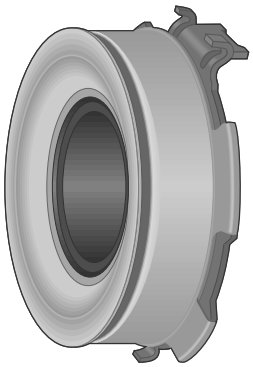

D21

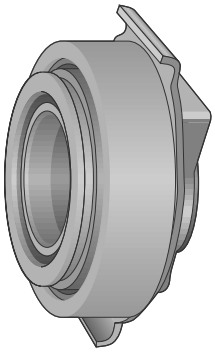

D22

D23

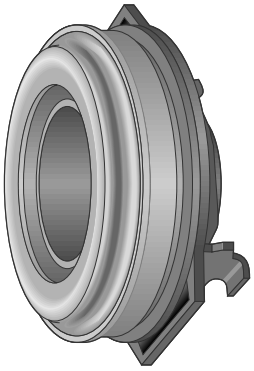

D24

www.bergab.ru Берг АБ bergab@ya.ru Тел. (495)-228-06-21, факс (495) 223-3071

D25

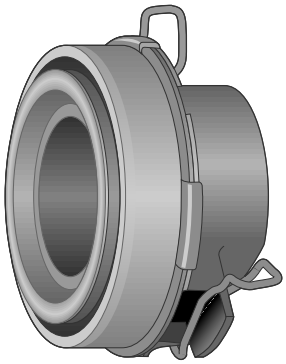

D26

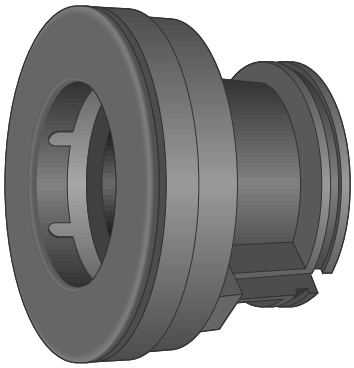

D27

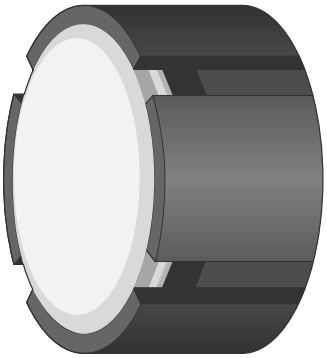

D28

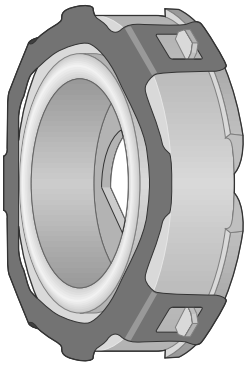

D29

D30

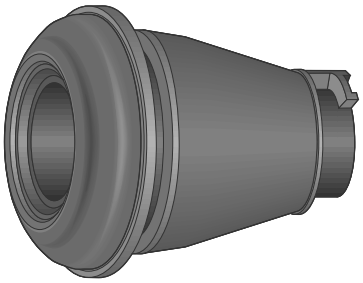

D31

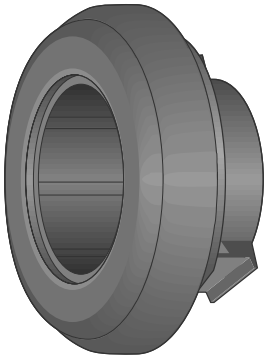

D32

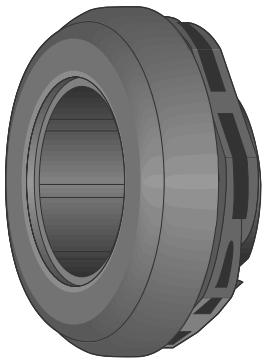

D33

www.bergab.ru Берг АБ bergab@ya.ru Тел. (495)-228-06-21, факс (495) 223-3071

SKF

ALFA ROMEO 102
AUDI → VAG .....
BMW 102
CHRYSLER 102
CITROËN → PEUGEOT
DAEWOO 102
DAIHATSU 102
FIAT 102
FORD (EUR) 102
FORD (J) 102
HONDA 102
HYUNDAI 102
INNOCENTI 103
ISUZU 103
IVECO 103
KIA 103
LADA 103
LANCIA → FIAT
MAZDA 103
MERCEDES – BENZ 103
MITSUBISHI 103
NISSAN 103
OPEL 104
PERODUA 104
PEUGEOT 104
PORSCHE → VAG
PROTON 104
RENAULT 104
ROVER 104
SAAB 104
SEAT 104
SUBARU 104
SUZUKI 104
TALBOT → PEUGEOT
TOYOTA 105
VAG 105
VAUXHALL → OPEL
VOLKSWAGEN → VAG
VOLVO 105

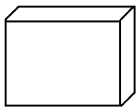

SKF

AP 106
F&S 106
KOYO 106
LUK 107
NACHI 107
NSK 108
NTN 108
VALEO 109

www.bergab.ru Берг АБ bergab@ya.ru Тел. (495)-228-06-21, факс (495) 223-3071

ALFA ROMEO

60518225	VKC 2083
60521134	VKC 2083
60603915	VKC 2123
60805112	VKC 2168
60806065	VKC 2501
95462693	VKC 2115

AUDI → VAG

BMW

2151 1 204 525	VKC 2151
2151 1 223 366	VKC 2120
2151 1 225 203	VKC 2120

CHRYSLER

4 505 353	VKC 2550

CITROËN → PEUGEOT

DAEWOO

1000-9290-5	VKC 3558
23265-77D00-000	VKC 3564
90-170-928	VKC 3541
90251210	VKC 2238
9006475	VKC 2238
90111364	VKC 2186
90250658	VKC 2215
T4-6015	VKC 3541

DAIHATSU

31230-35090	VKC 3616
31230-87202	VKC 3509
31230-87202-000	VKC 3509
31230-87309	VKC 3524
31230-87501	VKC 3563
31230-87502	VKC 3563
31230-87504	VKC 3588
31230-87505	VKC 3588
31230-87505-000	VKC 3588
31230-87506	VKC 3588
31230-87604	VKC 3524
31230-87702	VKC 3578
31230-87703	VKC 3578
31230-87704	VKC 3578
31230-87705	VKC 3578
90043-63002	VKC 3509
90043-67004	VKC 3520
90043-67014	VKC 3511
90043-67015	VKC 3519
90043-67016	VKC 3506
90363-33002	VKC 3504
90363-33004	VKC 3504
90363-33057	VKC 3503
90363-33077	VKC 3503
90363-33080	VKC 3504
90363-38084	VKC 3505
90363-40001	VKC 3502
90363-40002	VKC 3502
90363-40003	VKC 3506
90363-40008	VKC 3502
90363-40009	VKC 3502
90363-40010	VKC 3506
90363-40019	VKC 3502
90363-40022	VKC 3502
90363-45001	VKC 3523
90363-45002	VKC 3523
90363-45013	VKC 3548
90363-45079	VKC 3513

FIAT / LANCIA

4 438 567	VKC 2113
5 429 379	VKC 2194
5 950 714	VKC 2500
5 954 175	VKC 2064
5 991 916	VKC 2095
7 540 733	VKC 2500
7 625 958	VKC 2183
7 628 856	VKC 2501
7 662 270	VKC 2095
7 681 283	VKC 2168
7 683 329	VKC 2113
46 466 726	VKC 2183
60 805 112	VKC 2168
60 806 065	VKC 2501
75 492 172	VKC 2192
95 492 693	VKC 2115
14 740 820 80	VKC 2537
96 090 882 80	VKC 2216
96 092 637 80	VKC 2239

FORD (EUR)

14 95 487	VKC 2164
15 54 189	VKC 2144
15 55 006	VKC 2144
16 19 151	VKC 2163
16 43 413	VKC 2161
33 96 878	VKC 3507
60 42 593	VKC 2161
60 52 910	VKC 2164
60 91 025	VKC 2163
60 91 026	VKC 2144
61 24 270	VKC 2144
61 24 271	VKC 2164
61 24 272	VKC 2163
61 64 967	VKC 2601
65 46 467	VKC 2548
67 44 842	VKC 2546
68 46 395	VKC 2161
68 47 097	VKC 2547
69 28 450	VKC 2546
71 66 796	VKC 2548
83BB7548 AA	VKC 2144
83BB7548 BA	VKC 2164
83BB7548 CA	VKC 2163
86AB7548 AA	VKC 2161
86AB7548 AB	VKC 2161
88BB7548 AA	VKC 2601
91AB7548 BA	VKC 2548
92WT7548 AA	VKC 2547
93ZT7548 AB	VKC 2546
ECB 105	VKC 2161
ECB 113	VKC 2144
ECB 135	VKC 2601
ECB 272	VKC 2548
ECB 273	VKC 2546

FORD (J)

0222-16-222	VKC 3511
1391-16-510	VKC 3570
8540-16-510	VKC 3507
E301-16-510	VKC 3568
E8BZ-7548-A	VKC 3602
FE62-16-510	VKC 3600
G560-16-510B	VKC 3507
H606-16-510	VKC 3507
SE03-16-510	VKC 3600

HONDA

22810-P20-003	VKC 3654
22810-P20-005	VKC 3654
22810-P21-003	VKC 3577
22810-PB6-003	VKC 3522
22810-PB6-921	VKC 3508
22810-PB6-922	VKC 3508
22810-PB6-923	VKC 3508
22810-PC8-921	VKC 3508
22810-PC8-922	VKC 3508
22810-PC8-923	VKC 3508
22810-PE6-003	VKC 3542
22810-PE6-921	VKC 3542
22810-PF5-008	VKC 3605
22810-PG2-000	VKC 3577
22810-PG2-004	VKC 3577
22810-PG2-008	VKC 3577
22810-PH8-000	VKC 3603
22810-PH8-008	VKC 3603
22810-PL3-003	VKC 3617
22810-PL3-005	VKC 3617
22810-PL6-003	VKC 3542
22810-PL6-005	VKC 3618
22810-PL6-006	VKC 3618
22810-PS1-000	VKC 3605
22810-PS1-005	VKC 3605
22810-PS1-008	VKC 3605
22810-PS1-015	VKC 3605
22810-PX5-J02	VKC 3577
22810-PX5-003	VKC 3577
22810-PX5-004	VKC 3577
22863-551-004	VKC 3590
22863-551-023	VKC 3590
22863-551-024	VKC 3590
22863-551-305	VKC 3590
22863-634-003	VKC 3503
22863-634-004	VKC 3503
22863-634-023	VKC 3503
22863-689-003	VKC 3522
22863-PB6-003	VKC 3522

HYUNDAI

03452-21003	VKC 3541
41410-11000	VKC 3515
41420-92100	VKC 3541
41421-14500	VKC 3552
41421-21000	VKC 3515
41421-21300	VKC 3515
41421-21400	VKC 3515
41421-26000	VKC 3515
41421-33010	VKC 3552
41421-43000	VKC 3579
41421-43010	VKC 3579
41421-43020	VKC 3579
42421-21000	VKC 3515

MD706180	**VKC 3515**
MD719469	**VKC 3579**
ME600576	**VKC 3559**

INNOCENTI

7681283	**VKC 2168**
554 621 203	**VKC 3578**

ISUZU

1-09800-145-0	**VKC 3541**
1-09800-195-0	**VKC 3541**
1-09820-003-1	**VKC 3541**
1-09820-008-0	**VKC 3514**
1-09820-008-1	**VKC 3514**
1-09820-078-0	**VKC 3631**
1-31312-002-1	**VKC 3514**
1-31312-003-1	**VKC 3541**
5-09800-072-0	**VKC 3537**
5-09800-078-0	**VKC 3631**
5-09803-004-0	**VKC 3511**
5-09803-005-0	**VKC 3511**
5-31314-001	**VKC 3558**
5-31314-001-1	**VKC 3558**
5-31321-003-0	**VKC 3505**
5-31321-003-3	**VKC 3505**
5-31340-011-0	**VKC 3558**
8-94101-243-0	**VKC 3554**
8-94109-658-0	**VKC 3574**
8-94109-658-1	**VKC 3574**
8-94127-773	**VKC 3558**
8-94133-417	**VKC 3553**
8-94133-417-0	**VKC 3553**
8-94133-417-1	**VKC 3553**
8-94158-408	**VKC 3558**
8-94377-417-1	**VKC 3606**
8-94379-441-0	**VKC 3505**
8-94379-499-0	**VKC 3606**
8-94389-367-0	**VKC 3574**
8-94389-416	**VKC 3606**
8-94453-346-1	**VKC 3630**
8-94453-348-0	**VKC 3606**
8-97023-074-0	**VKC 3621**
9-00095-0300	**VKC 3514**
9-00095-038-1	**VKC 3513**
9-00095-040	**VKC 3505**
9-00095-040-1	**VKC 3505**
9-00095-044-1	**VKC 3541**
9-31320-620	**VKC 3505**
9-31320-620-1	**VKC 3505**
94020016	**VKC 3505**
94101243	**VKC 3554**
94453348	**VKC 3505**

IVECO

93800287	**VKC 2170**
93806822	**VKC 2170**

KIA

0FE62-16-510A	**VKC 3600**
KB301-16-510	**VKC 3609**
OK011-16-510	**VKC 3600**

LADA

21081601180	**VKC 2535**
211001601180	**VKC 2536**

LANCIA → FIAT

MAZDA

0086-16-222	**VKC 3513**
0086-16-222A	**VKC 3513**
0107-16-222	**VKC 3513**
0221-16-222	**VKC 3506**
0222-16-220	**VKC 3511**
0222-16-222	**VKC 3511**
0419-16-510	**VKC 3576**
0419-16-512	**VKC 3576**
0603-16-222	**VKC 3513**
0672-16-220	**VKC 3513**
0727-16-512	**VKC 3540**
0727-16-512A	**VKC 3540**
1304-16-510	**VKC 3540**
1304-16-510A	**VKC 3540**
1304-16-510B	**VKC 3540**
1391-16-510	**VKC 3570**
1391-16-510A	**VKC 3570**
1393-16-510	**VKC 3572**
8450-16-510B	**VKC 3507**
8531-16-510	**VKC 3568**
8531-16-510A	**VKC 3568**
8540-16-510	**VKC 3507**
8540-16-510B	**VKC 3507**
9960-62-220	**VKC 3506**
A502-16-510	**VKC 3591**
B301-15-510A	**VKC 3602**
B301-16-510	**VKC 3602**
B301-16-510A	**VKC 3602**
B311-16-510	**VKC 3602**
B315-16-510	**VKC 3602**
B622-16-510	**VKC 3619**
BP02-16-510	**VKC 3600**
E301-16-510	**VKC 3568**
E301-16-510A	**VKC 3607**
E8BZ-7548-A	**VKC 3602**
F201-16-510	**VKC 3507**
F853-16-510	**VKC 3507**
FE62-16-510	**VKC 3600**
FE62-16-510A	**VKC 3600**
FE84-16-510	**VKC 3507**
G560-16-510B	**VKC 3507**
H606-16-510	**VKC 3507**
H606-16-510A	**VKC 3507**
N309-16-510	**VKC 3600**
N315-16-S10	**VKC 3659**
SE03-16-510	**VKC 3600**
SE03-16-510A	**VKC 3600**
SF03-16-510	**VKC 3600**

MERCEDES – BENZ

000 250 51 15	**VKC 2045**
000 250 52 15	**VKC 2045**
000 250 62 15	**VKC 2202**
000 250 69 15	**VKC 2202**
000 250 87 15	**VKC 2202**
001 250 01 15	**VKC 2519**
001 250 02 15	**VKC 2519**
001 250 23 15	**VKC 2202**
001 250 24 15	**VKC 2202**
001 250 25 15	**VKC 2519**
001 250 70 15	**VKC 2045**
001 250 71 15	**VKC 2045**

MITSUBISHI

03452-21001	**VKC 3541**
03452-21003	**VKC 3541**
03452-21084	**VKC 3541**
03452-21085	**VKC 3541**
03452-23000	**VKC 3512**
03452-23001	**VKC 3512**
03452-23002	**VKC 3512**
03452-23003	**VKC 3512**
03452-23004	**VKC 3512**
03452-23005	**VKC 3512**
03452-23083	**VKC 3512**
03452-23084	**VKC 3512**
03452-23085	**VKC 3512**
03452-69000	**VKC 3514**
44002-57100	**VKC 3523**
JM60330	**VKC 3543**
MB837549	**VKC 3652**
MD700257	**VKC 3552**
MD701125	**VKC 3505**
MD701283	**VKC 3505**
MD702241	**VKC 3511**
MD703270	**VKC 3592**
MD706180	**VKC 3515**
MD710335	**VKC 3562**
MD712800	**VKC 3562**
MD714903	**VKC 3562**
MD719469	**VKC 3579**
MD719925	**VKC 3515**
MD721203	**VKC 3562**
MD722744	**VKC 3515**
MD800241	**VKC 3513**
ME600000	**VKC 3545**
ME600198	**VKC 3523**
ME600340	**VKC 3559**
ME600341	**VKC 3559**
ME600576	**VKC 3559**
ME602710	**VKC 3559**
ME605584	**VKC 3559**
ME620330	**VKC 3514**
ME623018	**VKC 3546**
ME623600	**VKC 3546**
ME624278	**VKC 3546**
ME624678	**VKC 3587**
ME627580	**VKC 3661**
MJM60330	**VKC 3543**
MR195689	**VKC 3579**
MT209224	**VKC 3509**
MT209225	**VKC 3509**

NISSAN

08062-06019	**VKC 3549**
21123-05010	**VKC 3519**
21123-0504P	**VKC 3519**
30433-M0101	**VKC 3594**
30433-M0102	**VKC 3594**
30433-M0103	**VKC 3595**
30435-M0100	**VKC 3550**
30435-M0103	**VKC 3595**
30435-M1000	**VKC 3550**
30435-M3000	**VKC 3550**

NISSAN .../...

30502-01B00	VKC 3551
30502-03E16	VKC 3641
30502-03E18	VKC 3598
30502-03E20	VKC 3581
30502-03E24	VKC 3610
30502-13200	VKC 3519
30502-14601	VKC 3521
30502-14800	VKC 3533
30502-18001	VKC 3531
30502-18E18	VKC 3598
30502-21000	VKC 3500
30502-28E16	VKC 3641
30502-28E17	VKC 3641
30502-28E18	VKC 3598
30502-28E20	VKC 3581
30502-28E21	VKC 3581
30502-28E24	VKC 3610
30502-30P00	VKC 3565
30502-32200	VKC 3519
30502-45P00	VKC 3565
30502-52A00	VKC 3555
30502-52A60	VKC 3555
30502-53J00	VKC 3555
30502-53J01	VKC 3555
30502-54A00	VKC 3555
30502-55100	VKC 3538
30502-56A00	VKC 3598
30502-56A60	VKC 3598
30502-65J00	VKC 3651
30502-81N00	VKC 3560
30502-86401	VKC 3519
30502-90004	VKC 3527
30502-90006	VKC 3538
30502-90007	VKC 3541
30502-96E20	VKC 3581
30502-D3518	VKC 3611
30502-D3522	VKC 3611
30502-D3560	VKC 3611
30502-M8000	VKC 3560
30502-M8005	VKC 3560
30502-M8010	VKC 3599
30502-M8060	VKC 3560
30502-V6200	VKC 3612
30502-W1700	VKC 3565
30502-W1701	VKC 3565
30502-Z5000	VKC 3514
30502-Z5001	VKC 3514

OPEL / VAUXHALL

03 396 878	VKC 3507
06 36 659	VKC 3606
06 68 635	VKC 2186
06 68 645	VKC 2213
06 68 650	VKC 2215
06 68 651	VKC 2238
06 68 652	VKC 2215
06 68 653	VKC 2215
06 68 661	VKC 2541
42 93 481	VKC 3505
42 93 862	VKC 3554
90112260	VKC 2213
90129095	VKC 2213
90250658	VKC 2215
90250663	VKC 2215
90251210	VKC 2238
90251702	VKC 2238
90278884	VKC 2238
90278910	VKC 2215
90465672	VKC 2541
94379499	VKC 3606

PERODUA

31230-87204	VKC 3668

PEUGEOT / CITROËN

2041.11	VKC 1000
2041.14	VKC 2051
2041.21	VKC 2146
2041.25	VKC 2111
2041.26	VKC 2111
2041.27	VKC 2169
2041.28	VKC 2115
2041.29	VKC 2193
2041.35	VKC 2169
2041.38	VKC 2080
2041.42	VKC 2216
2041.43	VKC 2169
2041.47	VKC 2239
2041.58	VKC 2542
2041.59	VKC 2537
2041.60	VKC 2216
5 478 534	VKC 2114
71 275 784	VKC 2144
75 047 000	VKC 2144
75 492 172	VKC 2192
91 512 268	VKC 2108
91 535 743	VKC 2169
91 537 167	VKC 2108
95 492 693	VKC 2115
95 494 929	VKC 2196
95 496 167	VKC 2115
95 577 787	VKC 2114
96 616 712	VKC 2054
97 501 450	VKC 2193
97 501 451	VKC 2193
DX 31401	VKC 2194

PORSCHE → VAG

PROTON

MD 706180	VKC 3515

RENAULT

77 00 102 781	VKC 2433
77 00 300 039	VKC 2190
77 00 519 170	VKC 2080
77 00 576 298	VKC 2115
77 00 586 887	VKC 2150
77 00 588 687	VKC 2150
77 00 589 253	VKC 2115
77 00 625 461	VKC 2108
77 00 638 870	VKC 2080
77 00 676 150	VKC 2080
77 00 689 934	VKC 2108
77 00 692 431	VKC 2189
77 00 725 237	VKC 2191
77 00 869 415	VKC 2191
77 01 348 231	VKC 2080
77 01 348 537	VKC 2115
77 01 348 915	VKC 2108
77 01 349 113	VKC 2189
77 01 616 841	VKC 2080
77 04 001 363	VKC 2189
77 04 001 430	VKC 2191

ROVER

GRB 239	VKC 2217
GRB 240	VKC 2195
GRB 241	VKC 2195
GRB 243	VKC 2538
GRB 567	VKC 3503
GRB 90244	VKC 3542
GRB 90250	VKC 2216
GRB 90253	VKC 2550
GRB 90254	VKC 3577
GRB 90257	VKC 2216
GRB 90258	VKC 2538

SAAB

11114116	VKC 2025
3209429-4	VKC 2235
719413	VKC 2025
8701708	VKC 2515
8704728	VKC 2232
8721995	VKC 2218
8732232	VKC 2238
8738072	VKC 2539

SEAT

4316750	VKC 2064
020 141 165 H	VKC 2195
02A 141 165 G	VKC 2241
02A 141 165 E	VKC 2241
085 141 165 E	VKC 2220
SE141125316 B	VKC 2095
SE022125316 A	VKC 2168
SE022125316 B	VKC 2219

SUBARU

30502-AA000	VKC 3582
30502-AA001	VKC 3582
30502-AA002	VKC 3582
30502-AA021	VKC 3582
30502-AA031	VKC 3660
30502-AA051	VKC 3613
30502-AA060	VKC 3613
30502-KA000	VKC 3509
30502-KA001	VKC 3509
30508-KA001	VKC 3629
30508-KA040	VKC 3629
33151-2100	VKC 3530
43151-1000	VKC 3530
43151-7000	VKC 3506
83151-4700	VKC 3509
83151-7000	VKC 3506
83151-7800	VKC 3505

SUZUKI

09269-28001	VKC 3529
09269-28003	VKC 3529
09269-28004	VKC 3567
09269-28005	VKC 3567

09269-28006	**VKC 3623**
09269-33001	**VKC 3564**
09269-33002	**VKC 3564**
09269-35003	**VKC 3509**
09269-35003	**VKC 3509**
09269-35004	**VKC 3564**
09269-35005	**VKC 3509**
09269-38001	**VKC 3505**
09269-38002	**VKC 3505**
09269-53003	**VKC 3509**
09269-53004	**VKC 3567**
23265-70C00	**VKC 3564**

TALBOT → PEUGEOT

TOYOTA

31230-05010	**VKC 3622**
31230-12040	**VKC 3556**
31230-12100	**VKC 3556**
31230-12110	**VKC 3556**
31230-12130	**VKC 3556**
31230-12140	**VKC 3556**
31230-12170	**VKC 3622**
31230-14030	**VKC 3640**
31230-14042	**VKC 3616**
31230-16060	**VKC 3556**
31230-16071	**VKC 3556**
31230-20160	**VKC 3584**
31230-20170	**VKC 3584**
31230-20190	**VKC 3584**
31230-22080	**VKC 3626**
31230-22081	**VKC 3626**
31230-22090	**VKC 3626**
31230-30150	**VKC 3616**
31230-32010	**VKC 3516**
31230-32011	**VKC 3516**
31230-32020	**VKC 3516**
31230-32040	**VKC 3516**
31230-32060	**VKC 3625**
31230-35050	**VKC 3628**
31230-35070	**VKC 3615**
31230-35080	**VKC 3615**
31230-35090	**VKC 3616**
31230-35101	**VKC 3616**
31230-35102	**VKC 3616**
31230-36140	**VKC 3642**
31230-36149	**VKC 3642**
31230-36150	**VKC 3643**
31230-36160	**VKC 3644**
31230-36170	**VKC 3650**
31230-36180	**VKC 3648**
31230-36190	**VKC 3646**
31230-36200	**VKC 3647**
31230-60120	**VKC 3645**
31230-60130	**VKC 3627**
31230-60140	**VKC 3665**
31230-60150	**VKC 3649**
31230-87309	**VKC 3524**
31230-87604	**VKC 3524**
90363-28032	**VKC 3528**
90363-33001	**VKC 3503**
90363-33002	**VKC 3504**
90363-33004	**VKC 3504**
90363-33057	**VKC 3503**
90363-33077	**VKC 3503**
90363-33080	**VKC 3504**
90363-38009	**VKC 3505**
90363-38013	**VKC 3543**
90363-38069	**VKC 3505**
90363-38084	**VKC 3505**
90363-40001	**VKC 3502**
90363-40003	**VKC 3506**
90363-40005	**VKC 3502**
90363-40006	**VKC 3502**
90363-40008	**VKC 3502**
90363-40010	**VKC 3506**
90363-40015	**VKC 3502**
90363-40019	**VKC 3502**
90363-40022	**VKC 3502**
90363-40045	**VKC 3506**
90363-40061	**VKC 3520**
90363-40063	**VKC 3520**
90363-40078	**VKC 3506**
90363-40081	**VKC 3506**
90363-45001	**VKC 3523**
90363-45002	**VKC 3523**
90363-45009	**VKC 3548**
90363-45012	**VKC 3614**
90363-45013	**VKC 3548**
90363-45079	**VKC 3513**
90363-52001	**VKC 3575**
90363-52018	**VKC 3538**
90363-52086	**VKC 3575**

VOLVO

30813705-8	**VKC 2433**
30819939-7	**VKC 2433**
3209429-4	**VKC 2433**
3411119-5	**VKC 2191**
3549391	**VKC 2065**
3549881	**VKC 2065**
380569	**VKC 2065**
381213	**VKC 2045**
672122	**VKC 2104**
6814976-8	**VKC 2514**
6814979	**VKC 2514**

VAG

012 141 165 D	**VKC 2601**
01E 161 165 B	**VKC 2601**
019 141 165	**VKC 2091**
020 141 165 H	**VKC 2195**
02A 141 165 G	**VKC 2241**
02A 141 165 E	**VKC 2241**
084 141 165 B	**VKC 2125**
084 141 165 D	**VKC 2125**
085 141 165 E	**VKC 2220**
088 141 165 B	**VKC 2091**
091 141 165 D	**VKC 2091**
113 141 165 B	**VKC 2091**
J31 230 350 70	**VKC 3615**
J31 230 350 90	**VKC 3616**

VAUXHALL → OPEL

VOLKSWAGEN → VAG

AP

HD 1001	VKC 2083
HD 1004	VKC 2083
HD 1013	VKC 2045
HD 1014	VKC 2045
HD 1020	VKC 2091
HD 1021	VKC 2065
HD 1023	VKC 3606
HD 1024	VKC 3503
HD 1043	VKC 2080
HD 1049	VKC 1000
HD 1050	VKC 2051
HD 1052	VKC 2064
HD 1066	VKC 2054
HD 1212	VKC 2113
HD 1215	VKC 2114
HD 1216	VKC 2111
HD 1217	VKC 2232
HD 1219	VKC 2065
HD 1222	VKC 2194
HD 1225	VKC 2120
HD 1231	VKC 2115
HD 1232	VKC 2125
HD 1233	VKC 2150
HD 1235	VKC 2151
HD 1245	VKC 2108
HD 1251	VKC 3505
HD 2034	VKC 2161
HD 2044	VKC 2164
HD 2209	VKC 2091
HD 2219	VKC 2195
HD 2303	VKC 2095
HD 2341	VKC 2123
HD 2404	VKC 2168
HD 2482	VKC 2144
HD 2483	VKC 2163
HD 3682	VKC 2186
HD 3831	VKC 2196
HD 3853	VKC 3542
HD 3866	VKC 2217
HD 3869	VKC 2193
HD 3880	VKC 2213
HD 3940	VKC 2202
HD 3942	VKC 2202
HD 3990	VKC 2191
HD 4330	VKC 2189
HD 4377	VKC 2192
HD 4599	VKC 2169
HD 4601	VKC 2170
HD 4621	VKC 2025
HD 4920	VKC 2190
HD 4941	VKC 2218
HD 5002	VKC 2220
HD 5005	VKC 2215
HD 5096	VKC 2216
HD 5096	VKC 2216
HD 5130	VKC 2238
HD 5164	VKC 2500
HD 5165	VKC 2501
HD 5233	VKC 3616
HD 5245	VKC 3507
HD 5246	VKC 3507
HD 5337	VKC 3615
HD 5338	VKC 3554
HD 5424	VKC 3507
HD 5509	VKC 2247
HD 5526	VKC 2601
HD 5691	VKC 2601
HD 5693	VKC 2241
HD 5748	VKC 2535
HD 5799	VKC 2235

F&S

1850 282 113	VKC 2104
1850 282 124	VKC 2051
1850 282 143	VKC 2054
1850 282 156	VKC 2064
1850 282 189	VKC 2113
1850 282 193	VKC 2111
1850 282 198	VKC 2194
1850 282 199	VKC 2114
1850 282 602	VKC 2115
1850 282 607	VKC 2146
1850 282 622	VKC 2515
1850 282 628	VKC 2108
1850 282 649	VKC 2169
1850 282 651	VKC 2192
1850 282 657	VKC 2193
1850 282 663	VKC 2196
1850 282 664	VKC 2219
1850 282 709	VKC 3505
1850 282 744	VKC 2232
1859 102 031	VKC 1000
1863 803 001	VKC 3503
1863 805 002	VKC 3554
3151 010 001	VKC 2083
3151 037 131	VKC 2125
3151 047 231	VKC 2151
3151 064 131	VKC 2091
3151 065 031	VKC 2170
3151 073 031	VKC 2161
3151 089 001	VKC 2186
3151 122 031	VKC 2202
3151 130 141	VKC 2168
3151 151 141	VKC 2080
3151 175 031	VKC 2215
3151 177 031	VKC 2519
3151 180 231	VKC 2241
3151 190 031	VKC 2065
3151 192 041	VKC 2164
3151 193 041	VKC 2091
3151 216 031	VKC 2514
3151 231 031	VKC 2120
3151 254 041	VKC 2045
3151 802 003	VKC 2195
3151 803 001	VKC 2144
3151 803 003	VKC 2163
3151 804 141	VKC 2123
3151 807 001	VKC 3507
3151 809 001	VKC 2213
3151 809 002	VKC 2238
3151 814 001	VKC 2235
3151 816 001	VKC 2220
3151 820 001	VKC 3542
3151 821 002	VKC 2535
3151 826 001	VKC 2216
3151 835 001	VKC 2538
3151 836 001	VKC 2500
3151 837 002	VKC 2501
3151 838 001	VKC 2169
3151 839 001	VKC 2051
3151 840 001	VKC 2095
3151 841 001	VKC 2193
3151 842 001	VKC 2108
3151 843 001	VKC 2601
3151 846 001	VKC 2189
3151 847 001	VKC 2191
3151 848 001	VKC 2114
3151 852 001	VKC 2217
3151 856 001	VKC 2150
3151 859 001	VKC 2190
3151 874 001	VKC 2239
3151 875 001	VKC 3616
3151 881 001	VKC 3615
3151 889 001	VKC 2548
3151 891 001	VKC 2546
3151 895 001	VKC 2183
3151 902 001	VKC 2539
3151 998 001	VKC 2520
3159 140 037	VKC 2025
3163 900 001	VKC 2218
3163 901 001	VKC 2541

KOYO

40TMK20-1S	VKC 3519
40TMK29	VKC 3520
40TNK20	VKC 3519
45TNK20	VKC 3545
60TMK20	VKC 3546
6206C3	VKC 3549
62TMK20-1	VKC 3661
65TNK20	VKC 3527
7204	VKC 3595
80TNK20	VKC 3512
CBU442822	VKC 3578
CBU472921	VKC 3602
CBU553524	VKC 3577
CT28-1	VKC 3528
CT38-1L1	VKC 3543
CT40B	VKC 3533
CT45-1S	VKC 3513
CT52A-1	VKC 3538
CT5582RU	VKC 3525
CT5586ARSE	VKC 3566
CT5588ARSE	VKC 3526
CT55BL1	VKC 3514
CT70B	VKC 3541
CT70BL1	VKC 3541
RCT2050RSE	VKC 3590
RCT25SA2	VKC 3591
RCT282SA	VKC 3588
RCT283SA	VKC 3567
RCT284SA	VKC 3563
RCT2850-1RUBS	VKC 3529
RCT2850RUBSL1	VKC 3529
RCT286SA	VKC 3551

www.bergab.ru Берг АБ bergab@ya.ru Тел. (495)-228-06-21, факс (495) 223-3071

RCT3048 2RS	**VKC 3530**
RCT3157	**VKC 3531**
RCT322SA	**VKC 3515**
RCT331SA	**VKC 3568**
RCT3360A	**VKC 3503**
RCT3360A2RS	**VKC 3504**
RCT3360A2RR5	**VKC 3504**
RCT3360S	**VKC 3503**
RCT3360SL1	**VKC 3503**
RCT336SA	**VKC 3568**
RCT337SA3	**VKC 3556**
RCT339SA	**VKC 3570**
RCT35-1	**VKC 3509**
RCT3558ARUS	**VKC 3509**
RCT3558ARUSL1	**VKC 3509**
RCT3563RS	**VKC 3571**
RCT356SA8	**VKC 3626**
RCT356SA9	**VKC 3616**
RCT356SA9-1	**VKC 3616**
RCT363SA	**VKC 3507**
RCT363SA-1	**VKC 3507**
RCT364SA	**VKC 3572**
RCT371SA	**VKC 3559**
RCT382SA1	**VKC 3573**
RCT38SL1	**VKC 3505**
RCT40	**VKC 3502**
RCT401SA	**VKC 3558**
RCT4064S	**VKC 3506**
RCT4064SL1	**VKC 3506**
RCT4067	**VKC 3521**
RCT4067L1	**VKC 3521**
RCT4068A2RSE	**VKC 3612**
RCT4075-1S	**VKC 3500**
RCT40SA	**VKC 3565**
RCT40SA2	**VKC 3565**
RCT40SA3	**VKC 3565**
RCT422SA1	**VKC 3606**
RCT432SA	**VKC 3574**
RCT45-1S	**VKC 3511**
RCT473SA	**VKC 3621**
RCT47SA1	**VKC 3587**
RCT52S	**VKC 3575**
RCT55B	**VKC 3540**
RCTS28SA	**VKC 3623**
RCTS30SA1	**VKC 3652**
RCTS31SA	**VKC 3508**

RCTS325SA	**VKC 3579**
RCTS335SA4	**VKC 3556**
RCTS335SA8	**VKC 3584**
RCTS3360A2RS	**VKC 3503**
RCTS338SA1	**VKC 3564**
RCTS338SA2	**VKC 3564**
RCTS33A3	**VKC 3555**
RCTS33SA-1	**VKC 3560**
RCTS351SA4	**VKC 3516**
RCTS354SA	**VKC 3577**
RCTS355SA	**VKC 3524**
RCTS356SA9	**VKC 3616**
RCTS35702RS	**VKC 3522**
RCTS4067A2RS	**VKC 3502**
RCTS45A	**VKC 3548**
RCTS45S	**VKC 3523**
SAC0347	**VKC 3550**
T45E	**VKC 3513**
TP1528A	**VKC 3594**

LUK

500 0001 10	**VKC 2045**
500 0004 10	**VKC 2025**
500 0010 10	**VKC 2108**
500 0013 10	**VKC 2111**
500 0017 10	**VKC 2051**
500 0019 10	**VKC 2146**
500 0027 11	**VKC 2113**
500 0028 10	**VKC 2095**
500 0035 10	**VKC 2120**
500 0037 20	**VKC 2151**
500 0040 10	**VKC 2080**
500 0071 10	**VKC 2144**
500 0095 10	**VKC 2054**
500 0097 10	**VKC 2114**
500 0099 30	**VKC 2115**
500 0100 30	**VKC 2194**
500 0107 30	**VKC 2123**
500 0141 10	**VKC 2125**
500 0143 11	**VKC 2161**
500 0149 20	**VKC 2065**
500 0150 50	**VKC 2104**
500 0157 30	**VKC 2150**
500 0166 10	**VKC 2186**
500 0168 30	**VKC 2083**
500 0171 10	**VKC 2163**
500 0172 10	**VKC 2091**

500 0179 30	**VKC 2064**
500 0184 10	**VKC 2164**
500 0202 11	**VKC 2168**
500 0212 10	**VKC 2202**
500 0225 30	**VKC 2193**
500 0226 60	**VKC 3503**
500 0227 60	**VKC 3505**
500 0235 60	**VKC 3507**
500 0244 50	**VKC 2515**
500 0245 10	**VKC 2169**
500 0249 11	**VKC 2195**
500 0250 10	**VKC 2213**
500 0254 30	**VKC 2191**
500 0275 30	**VKC 2189**
500 0276 30	**VKC 2190**
500 0286 30	**VKC 2196**
500 0307 60	**VKC 3542**
500 0309 30	**VKC 2500**
500 0311 10	**VKC 2220**
500 0320 10	**VKC 2215**
500 0321 10	**VKC 2238**
500 0327 30	**VKC 2216**
500 0330 10	**VKC 2519**
500 0331 30	**VKC 2235**
500 0333 20	**VKC 2218**
500 0365 30	**VKC 2217**
500 0373 30	**VKC 2219**
500 0401 30	**VKC 2501**
500 0410 10	**VKC 2601**
500 0411 30	**VKC 2192**
500 0429 20	**VKC 2170**
500 0433 60	**VKC 3578**
500 0440 10	**VKC 2241**
500 0462 30	**VKC 2239**
500 0462 30	**VKC 2537**
500 0515 10	**VKC 2548**
500 0519 60	**VKC 3554**
500 0535 10	**VKC 2546**
500 0638 20	**VKC 2535**
500 0647 20	**VKC 2514**
500 0671 30	**VKC 2183**
500 0701 50	**VKC 2538**
500 0707 10	**VKC 2541**
500 0710 00	**VKC 2539**

NACHI

30TRK-2NSL	**VKC 3530**
30TRK39-SL	**VKC 3576**
31TRK-1	**VKC 3531**
33TRBC-10SB	**VKC 3504**
33TRBC-4SB	**VKC 3504**
35TRBC07-10SB	**VKC 3536**
35TRBC07-5SB	**VKC 3522**
35TRK-1	**VKC 3509**
35TRK39	**VKC 3509**
40TMK29-1	**VKC 3520**
40TNK-1	**VKC 3519**
40TNK20	**VKC 3519**
40TRBC07-27SB	**VKC 3502**
40TRBC07-7SB	**VKC 3502**
40TRK-1	**VKC 3500**
40TRK30W1SB	**VKC 3502**
40TRK30W2SB	**VKC 3502**
40TRK39-1SB	**VKC 3506**
40TRK39-4SB	**VKC 3506**
40TSK-2	**VKC 3521**
44SCRN28P-8	**VKC 3668**
45TMK-1	**VKC 3511**
45TNK20	**VKC 3545**
45TNK804	**VKC 3513**
45TRBC07-13SB	**VKC 3548**
47SCRN031-2	**VKC 3542**
47SCRN34K-6	**VKC 3609**
47SCRN35-P2	**VKC 3602**
47SCRN35-P6	**VKC 3602**
47SCRN40P	**VKC 3654**
48SCRN32K	**VKC 3515**
50SCRN028-1	**VKC 3556**
50SCRN28P-5	**VKC 3556**
50SCRN31P	**VKC 3556**
50SCRN31P-1	**VKC 3622**
50SCRN34P-4	**VKC 3628**
50SCRN37P-4	**VKC 3626**
50SCRN40K	**VKC 3568**
50SCRN44S-2	**VKC 3616**
50TKB3501	**VKC 3628**
52TRBC09-7SB	**VKC 3575**
54SCRN042P	**VKC 3507**
54SCRN042P	**VKC 3507**
54SCRN042S	**VKC 3507**
55SCRN41P	**VKC 3577**

NACHI .../...

55TMK09-1	VKC 3526
55TMK804	VKC 3514
55TNK-1	VKC 3525
55TRK30W1	VKC 3540
58SCRN43A	VKC 3648
60SCRN03303	VKC 3516
60SCRN033-3	VKC 3516
60SCRN31P6	VKC 3625
6206C3	VKC 3549
62TKB3303	VKC 3651
65TNK20	VKC 3527
68SCRN43A	VKC 3650
68SCRN46P	VKC 3644
68SCRN48P	VKC 3649
68SCRN58P-2	VKC 3627
68SCRN62P	VKC 3647
68SCRN63P-2	VKC 3646
70TNK-1	VKC 3541
80TCRG020-4	VKC 3614
80TNK20	VKC 3512
BC11S3	VKC 3538
BC11S4	VKC 3539
BC12S	VKC 3543
BC12S4SB	VKC 3505
BC6S1	VKC 3528
BC6S13	VKC 3528
BC7S1SB	VKC 3503
BC7S1W2SB	VKC 3504
BC7S4SB	VKC 3503

NSK

24TK308B2U3	VKC 3505
24TK308E1U3	VKC 3543
28BWK06B-Y-2CA33	VKC 3595
28BWK06D1-Y-2CA33	VKC 3595
30TMK29B	VKC 3576
33TKD03U3	VKC 3504
35TMK29B2U3	VKC 3509
35TMK29B2U5	VKC 3509
35TMK29C1U3	VKC 3509
38TKA2801	VKC 3551
38TKA2801U3	VKC 3551
40TKD01U3	VKC 3506
40TKD03U3	VKC 3502
40TKD05U3	VKC 3502
40TKD07U3	VKC 3502
40TMK20B	VKC 3519
40TMK20B1U3	VKC 3519
40TMK291BU3	VKC 3520
40TNK20AK2	VKC 3519
44TKA2803U3	VKC 3563
44TKB2803	VKC 3562
44TKB2803U3	VKC 3562
44TKB2805R	VKC 3578
44TKB2806A	VKC 3629
44TKE2801U3	VKC 3563
45TKD07U3	VKC 3523
45TKD10U3	VKC 3548
45TNK20AAK2	VKC 3545
47TKB2901 UN3S	VKC 3618
47TKB3101	VKC 3617
48TKA3201U3	VKC 3515
48TKA3210U3	VKC 3552
48TKA3211AU3	VKC 3553
48TKA3211B	VKC 3553
48TKA3214	VKC 3554
48TKA3301	VKC 3555
48TKB3202	VKC 3515
48TKB3301	VKC 3555
48TKB3302A	VKC 3555
48TKC4202	VKC 3630
50TKA3303	VKC 3599
50TKA3305R	VKC 3556
50TKA3305RU3	VKC 3556
50TKA3803BU3	VKC 3557
50TKA3803UN3S	VKC 3557
50TKA3805	VKC 3695
50TKB3301BR	VKC 3556
50TKB3304	VKC 3564
50TKB3501BR	VKC 3628
50TKB3504BR	VKC 3616
50TKB3504BRA	VKC 3640
50TKB3505BR	VKC 3615
50TKE3301	VKC 3564
54TKA3501	VKC 3558
54TKE3601	VKC 3568
54TKE3602A	VKC 3507
55TKA3102	VKC 3508
55TKA3102A	VKC 3508
55TKA3102U3	VKC 3508
55TKA3201	VKC 3592
55TKA3305R	VKC 3556
55TKB3502	VKC 3605
55TNK29	VKC 3525
58TKA3702U3	VKC 3559
58TKA3703	VKC 3559
58TKA3703B	VKC 3559
58TKB3503AR	VKC 3665
60TKA3502U3	VKC 3516
60TKB3500R	VKC 3625
60TKB3502R	VKC 3584
60TKB3506R	VKC 3625
60TMK20U3	VKC 3546
6206C3	VKC 3549
62TKA3303U3	VKC 3565
62TKA3309U3	VKC 3560
62TKA3310	VKC 3560
62TKA3311	VKC 3598
62TKB3301	VKC 3560
62TKB3304A	VKC 3560
62TKB3304B	VKC 3560
62TKC4001	VKC 3565
65TNK20	VKC 3527
68TKB3505AR	VKC 3642
68TKB3506AR	VKC 3643
68TKB3802AR	VKC 3645
68TKP3303	VKC 3659
78TKC5401	VKC 3631
TK28-1A	VKC 3528
TK28-1F	VKC 3529
TK30-5U3	VKC 3530
TK31-1B	VKC 3531
TK33-1	VKC 3503
TK33-1U3	VKC 3503
TK33Z-1	VKC 3504
TK38Z-6U3	VKC 3532
TK40-14AU3	VKC 3506
TK40-16AU3	VKC 3502
TK40-1B1	VKC 3533
TK40-1B2AK2	VKC 3521
TK40-4AU3	VKC 3500
TK45-15U3	VKC 3523
TK45-2	VKC 3513
TK45-4BU3	VKC 3511
TK45-4EU3	VKC 3537
TK45-4U3	VKC 3513
TK52Z-1B	VKC 3538
TK52Z-1B(U3)	VKC 3538
TK52Z-1C	VKC 3575
TK55-1A1U3	VKC 3514
TK55-1BU3	VKC 3540
TK70-1A1U3	VKC 3541
TK80-1AU3	VKC 3512

NTN

24TK308Y	VKC 3543
40TMK20	VKC 3519
40TMK29	VKC 3520
40TNK20	VKC 3519
45TMK804X	VKC 3513
45TNK20/4E	VKC 3545
45TNK20/XG	VKC 3545
45TRBC07-13SB	VKC 3548
50TMK804/2E	VKC 3575
52TMK804	VKC 3538
55TMK804X/2E	VKC 3514
55TNK29	VKC 3525
55TRK30A/2E	VKC 3540
60TMK20	VKC 3546
6206C3	VKC 3549
65TNK20/2E	VKC 3527
FCR38-1	VKC 3551
FCR38-1/2E	VKC 3551
FCR44-14/5K	VKC 3629
FCR44-21/2E	VKC 3619
FCR44-22-5/2E	VKC 3660
FCR44-25-4/2E	VKC 3578
FCR44-2/2E	VKC 3563
FCR44-9/2E	VKC 3567
FCR47-5/2E	VKC 3603
FCR47-8-3/2E	VKC 3602
FCR48-12/2E	VKC 3555
FCR48-23/2E	VKC 3555
FCR48-23-4/2E	VKC 3555
FCR48-24/2E	VKC 3611
FCR48-24-3/2E	VKC 3611
FCR50-10/2E	VKC 3568
FCR50-17-8/2E	VKC 3607
FCR50-1/2E	VKC 3568
FCR50-30-2	VKC 3564
FCR50-6/2E	VKC 3570
FCR54-10/2E	VKC 3507
FCR54-13/2E	VKC 3600
FCR54-15/2E	VKC 3524

FCR54-19/2E	**VKC 3600**
FCR54-2/2E	**VKC 3507**
FCR54-33-1/2E	**VKC 3507**
FCR54-46-2/2E	**VKC 3507**
FCR54-47-2/2E	**VKC 3600**
FCR54-48/2E	**VKC 3600**
FCR54-48-3/2E	**VKC 3600**
FCR54-58/2E	**VKC 3507**
FCR54-5/2E	**VKC 3572**
FCR55-15/2E	**VKC 3605**
FCR55-10/2E	**VKC 3579**
FCR55-17/2E	**VKC 3579**
FCR55-1/2E	**VKC 3592**
FCR62-10/2E	**VKC 3598**
FCR62-11/2E	**VKC 3610**
FCR62-13/2E	**VKC 3581**
FCR62-16-8	**VKC 3582**
FCR62-16-8/2E	**VKC 3582**
FCR62-23/2E	**VKC 3597**
FCR62-26/2E	**VKC 3560**
FCR62-26-5/2E	**VKC 3560**
FCR62-27/2E	**VKC 3598**
FCR62-28/2E	**VKC 3598**
FCR62-28-5/2E	**VKC 3598**
FCR62-29/2E	**VKC 3610**
FCR62-29-5/2E	**VKC 3610**
FCR62-30/2E	**VKC 3641**
FCR62-30-4/2E	**VKC 3641**
FCR62-32-10/2E	**VKC 3581**
FCR62-32-11/2E	**VKC 3581**
FCR62-32-1/2E	**VKC 3581**
FCR62-32-2E	**VKC 3581**
FCR62-32/2E	**VKC 3581**
FCR62-33/2E	**VKC 3598**
FCR62-33-4/2E	**VKC 3598**
FCR62-42-4/2E	**VKC 3613**
FCR62-5/2E	**VKC 3560**
FCR62-9/2E	**VKC 3560**
FCR65-1/2E	**VKC 3552**
FCR68-1/4E	**VKC 3589**
SF0610	**VKC 3528**
SF0618	**VKC 3531**
SF0623/2E	**VKC 3529**
SF0721/2E	**VKC 3509**
SF0724/2E	**VKC 3503**
SF0725/2E	**VKC 3509**

SF0815/2E	**VKC 3506**
SF0815/4E	**VKC 3506**
SF0816/2E	**VKC 3505**
SF0820/2E	**VKC 3500**
SF0820/4E	**VKC 3500**
SF0823/2E	**VKC 3521**
SF0845/2E	**VKC 3502**
SF0859/2E	**VKC 3502**
SF0914/2E	**VKC 3511**
SF0940/2E	**VKC 3523**
SF1412/2E	**VKC 3541**
SF1607/2E	**VKC 3512**
X10-FCR55-5/2E	**VKC 3508**

VALEO

079053	**VKC 2080**
079937	**VKC 2216**
094230	**VKC 2169**
262406	**VKC 2194**
263603	**VKC 2161**
264573	**VKC 2083**
264630	**VKC 2115**
264847	**VKC 2192**
264918	**VKC 2113**
265172	**VKC 2193**
265254	**VKC 2095**
265315	**VKC 2189**
266121	**VKC 2191**
266155	**VKC 2114**
266272	**VKC 2217**
266402	**VKC 2196**
266518	**VKC 2108**
266949	**VKC 2064**
271471	**VKC 1000**
275853	**VKC 2051**
275854	**VKC 2054**
279205	**VKC 2123**
279423	**VKC 2235**
279431	**VKC 2170**
279434	**VKC 2190**
279523	**VKC 2500**
279597	**VKC 2150**
279612	**VKC 2501**
279673	**VKC 2219**
279675	**VKC 2168**
279695	**VKC 2146**
279697	**VKC 2111**

355033	**VKC 2186**
355533	**VKC 2125**
355538	**VKC 2091**
355544	**VKC 2025**
355562	**VKC 2195**
355591	**VKC 2045**
355594	**VKC 2202**
355600	**VKC 2213**
355610	**VKC 2164**
357522	**VKC 2163**
357577	**VKC 2220**
357579	**VKC 2215**
358079	**VKC 2065**
358250	**VKC 2120**
358252	**VKC 2151**
358273	**VKC 2091**
358275	**VKC 2144**
358359	**VKC 2232**
359217	**VKC 3505**
363989	**VKC 2051**
804004	**VKC 2215**
804005	**VKC 2241**
804006	**VKC 2239**
804010	**VKC 2535**
804012	**VKC 2238**
804018	**VKC 2519**
804022	**VKC 2601**
804033	**VKC 2218**
804038	**VKC 2183**

www.bergab.ru Берг АБ bergab@ya.ru Тел. (495)-228-06-21, факс (495) 223-3071

Technical information

A clutch release bearing, how it works and what it does

A vehicle's clutch assembly allows the engine and gearbox to be coupled and un-coupled. The clutch release bearing carries the force from the clutch pedal, through the release mechanism, to the spring of the clutch cover assembly. When the clutch pedal is depressed, the bearing releases the pressure acting to clamp the clutch disk between the cover assembly's pressure plate and the engine's flywheel. With the pressure released, the clutch disc is free of the drive from the engine, allowing the driver to stop without staling the engine or to select another gear (see figure 1).

Fig. 1

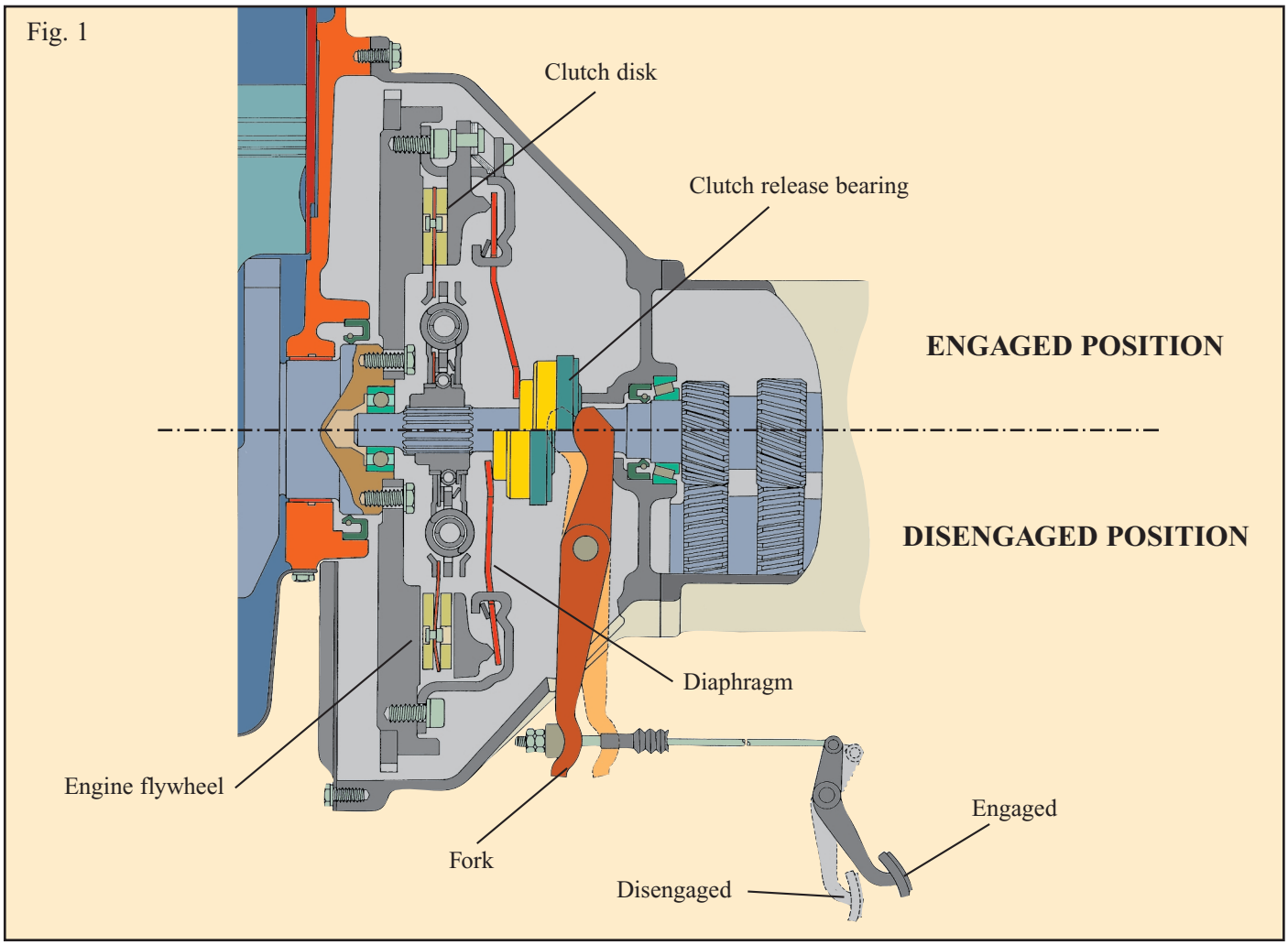

The release mechanism which links the clutch pedal to the release bearing operates on the cover assembly's spring in either a pull or a push action (see figures 2 and 3). The release mechanism will be either mechanical or hydraulic in operation :

www.bergab.ru Берг АБ bergab@ya.ru Тел. (495)-228-06-21, факс (495) 223-3071

www.bergab.ru Берг АБ bergab@ya.ru Тел. (495)-228-06-21, факс (495) 223-3071

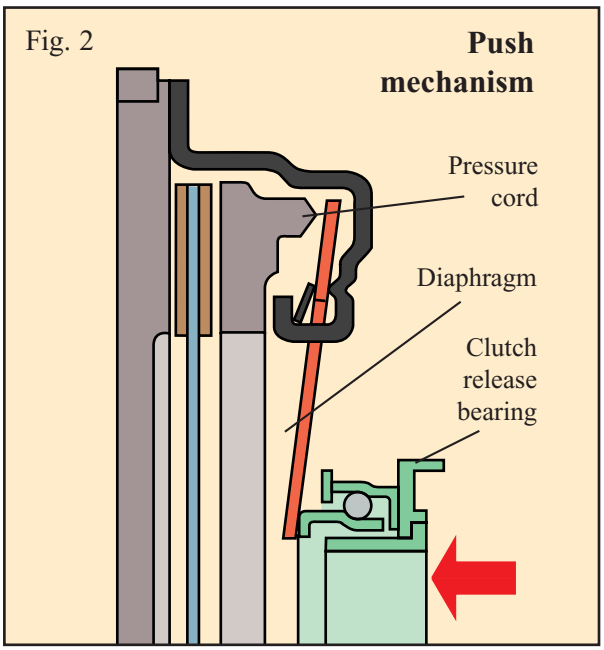

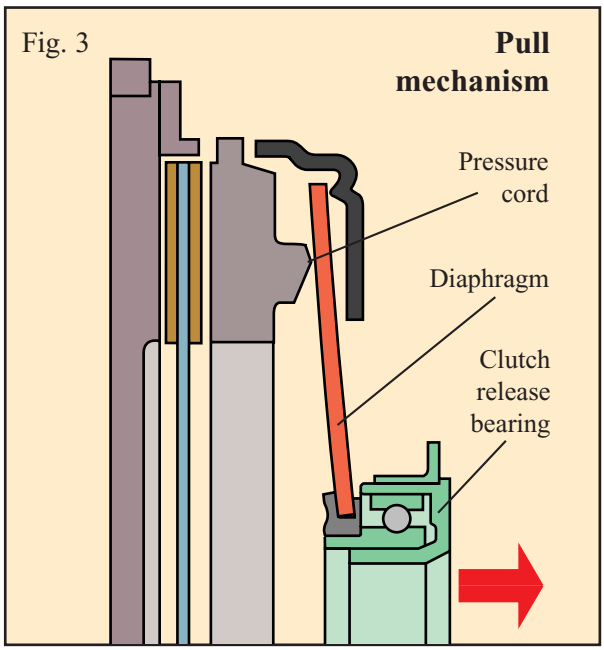

mechanical - the clutch pedal force is transferred via a cable. On most modern cars, this type of mecchanism will incorporate an automatic adjustement system to accommodate clutch disc facing wear.

hydraulic - the clutch pedal force is transmitted via a closed hydraulic system. In principle, identical to the system used for the vehicle brakes. The hydraulic system must be free of entrapped air and leaks if the complete clutch release mechanism is to operate correctly.

SKF clutch release bearings

The reliability and life of a clutch release bearing is linked directly to the quality of the design and of the materials from which it is made. SKF clutch release bearings use state of the art designs, modern light weight composite materials and quality steel. SKF's years of experience in designing and supplying clutch release bearing to the world's vehicle manufacturers, is incorporated in every unit in the SKF clutch release bearing range (see figure 4).

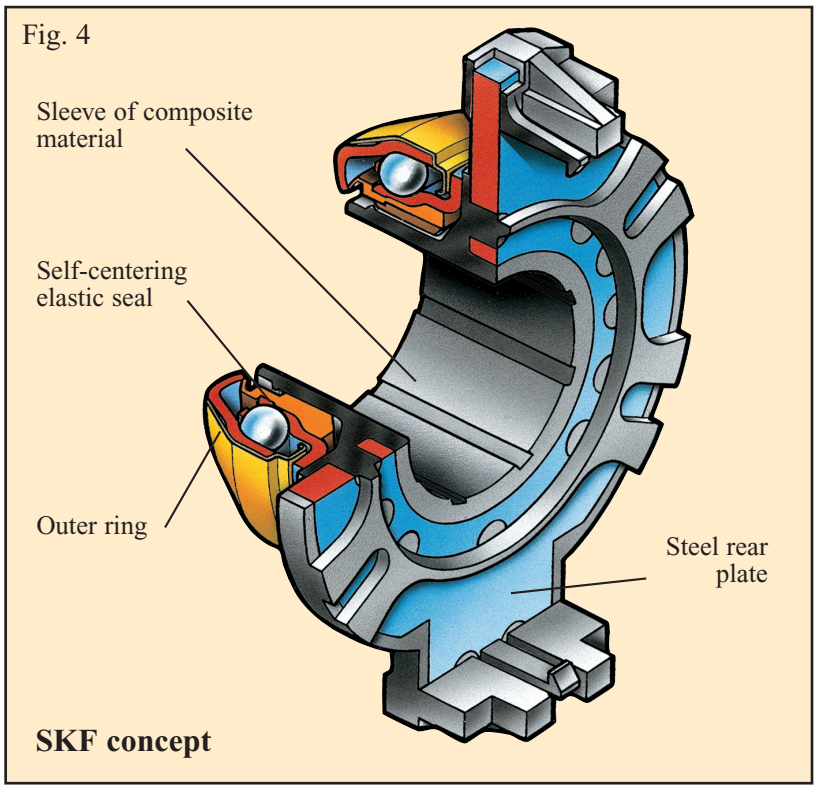

www.bergab.ru Берг АБ bergab@ya.ru Тел. (495)-228-06-21, факс (495) 223-3071

www.bergab.ru Берг АБ bergab@ya.ru Тел. (495)-228-06-21, факс (495) 223-3071

Technological advantages

- Compact, lightweight design.
- Angular contact bearing arrangement provides better cushioning of the thrust loads.
- Greater lubricant volume provides longer quieter running (see figures 5 and 6).

Fig. 5

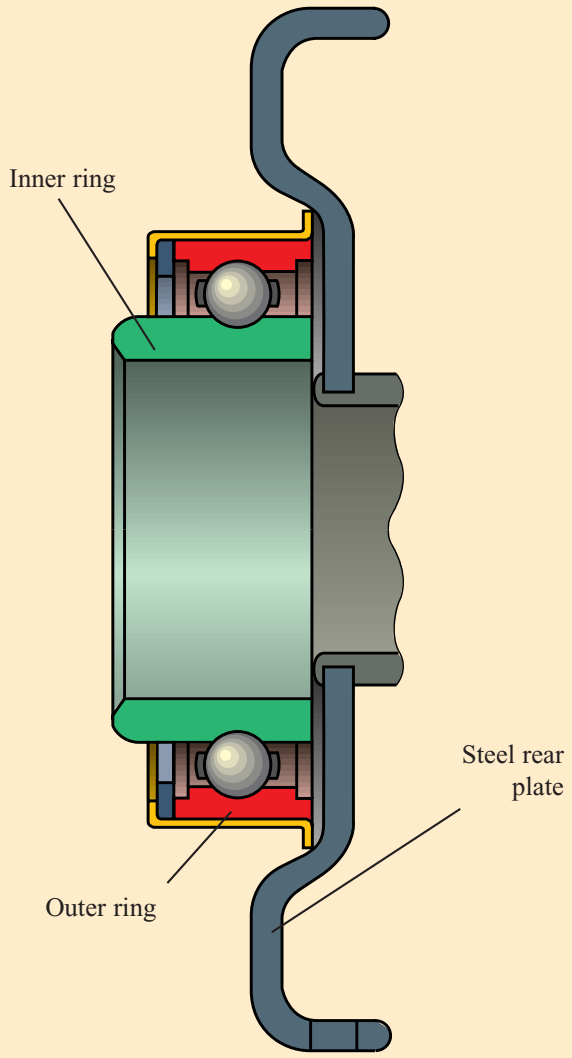

Conventional concept

Fig. 6

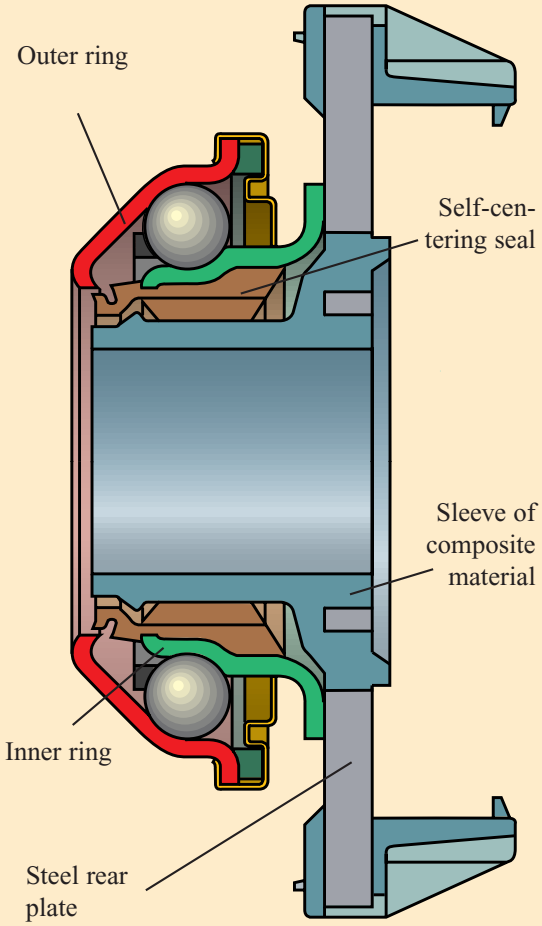

SKF concept

www.bergab.ru Берг АБ bergab@ya.ru Тел. (495)-228-06-21, факс (495) 223-3071

www.bergab.ru Берг АБ bergab@ya.ru Тел. (495)-228-06-21, факс (495) 223-3071

Assembly instructions

1. Gain access to the clutch assembly following the vehicle manufacturer's instructions.

Important : access to the clutch assembly will require removal of either the vehicle's engine or gearbox. Ensure appropriate equipment is used to lift or lower these heavy assemblies.

2. Remove the old clutch release bearing in line with the vehicle manufacturer's instructions.

3. Check the general condition of the clutch assembly ; look particularly for any sign of oil leaking from the gearbox into the bell housing. Excessive oil contamination of the clutch's driven disc will result in a slipping clutch. The gearbox input shaft and the release bearing guide tube should be clean and free of any obvious damage or significant wear.

4. Check the clutch release fork for signs significant wear, cracking or bending at the main pivot point and where it engages with the release bearing.
Any worn or damaged components or any oil leaks should be renewed or rectified before fitting the new release bearing.

5. Compare the basic dimension of the new and old bearings. Just to make sure you have the correct SKF clutch release bearing for the vehicle.

6. Check with the vehicle manufacturer's recommendations and if appropriate, very lightly grease the fork pivot points and the bore of the sleeve.

7. Fit the bearing assembly on the guide tube and latch in to the clutch release fork.

8. Check the release slides freely and is without excessive play.

9. Refit the engine or gearbox, as appropriate, in line with the vehicle manufacturer's recommended procedure.

10. Adjust the clutch release mechanism in-line with the vehicle manufacturer's recommendations.

Fig.7

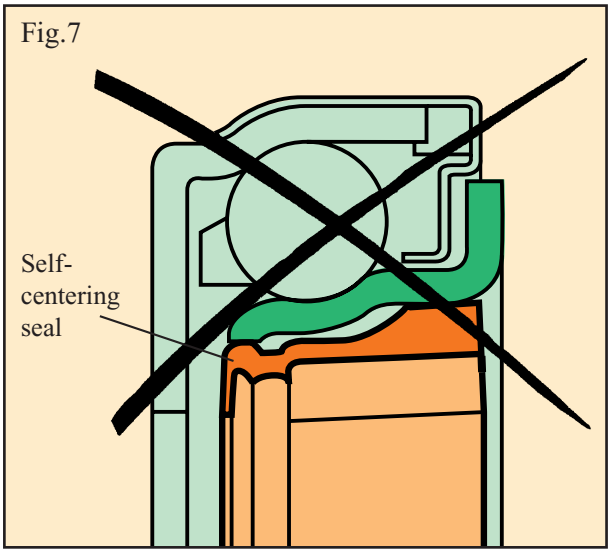

Fig. 8

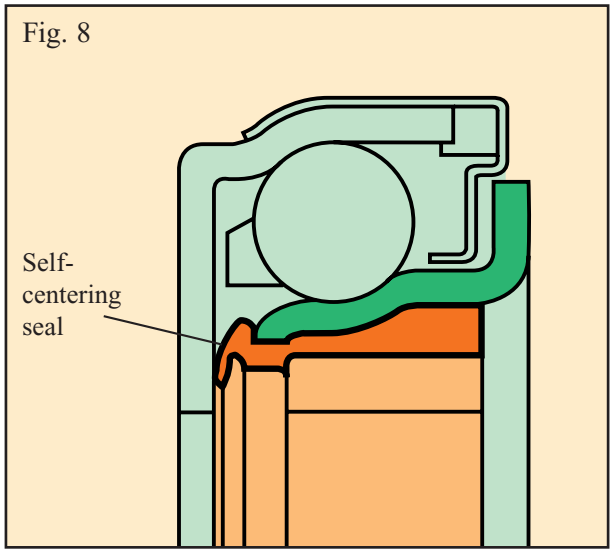

Important : for optimal operation, it is advisable to preload the SKF clutch release bearing with 35 to 80 N.

Note : we do not recommend disassemble the SKF clutch release bearing.
Howhever, if you disassemble the SKF clutch release bearing, you must take care on reassembly that the seal sleeve is correctly positioned (see figures 7 and 8). First, fit the seal sleeve to the inner ring of the bearing. Then, reintroduce the sleeve assembly, ensuring that the correct interlock position is achieved, as shown in figure 8.

www.bergab.ru Берг АБ bergab@ya.ru Тел. (495)-228-06-21, факс (495) 223-3071