BALL SPLINE

ROTARY BALL SPLINE

www.bergab.ru Берг АБ bergab@ya.ru Тел. (495)-228-06-21, факс (495) 223-3071

BALL SPLINE

The NB ball spline is a linear motion mechanism utilizing the rotational motion of ball elements. It can be used in a wide variety of applications including robotics and transport type equipment.

STRUCTURE AND ADVANTAGES

The NB ball spline consists of a spline shaft with raceway grooves and a spline nut. The spline nut consists of an outer cylinder (main body), retainer, side rings, and ball elements. Designed and manufactured to achieve a reliably smooth motion.

High Load Capacity and Long Travel Life:

The raceway grooves are machined to a radius close to that of the ball elements. The large ball contact surface results in high load capacity and long travel life.

Wide Variety of Configurations:

A total of 16 shafts with diameters ranging from 4mm to 100mm are available. Seven different types of nuts are available: cylindrical types (SSP/SSPM), flange types (SSPF/SSPT), and block types (SPA/SPA-W/SSPB). They can be specified to suit various applications.

Transmission of Torque:

NB ball splines can sustain loads in several directions simultaneously . They can be used as a single shaft system and can transmit (or resist) torque.

Zero Clearance in Rotational Direction:

The contact angle of the ball elements is such that a pre-load can be applied that allows zero clearance in the rotational direction, resulting in increased rigidity.

Ease of Additional Custom Machining:

Since a round shaft with raceway grooves is used, NB ball spline shafts can be machined easily to customized specifications.

High-Speed Motion and High-Speed Rotation:

The outer cylinder is compact and well balanced, resulting in good performance at high speed.

Figure B-1 Basic Structure of NB Ball Spline

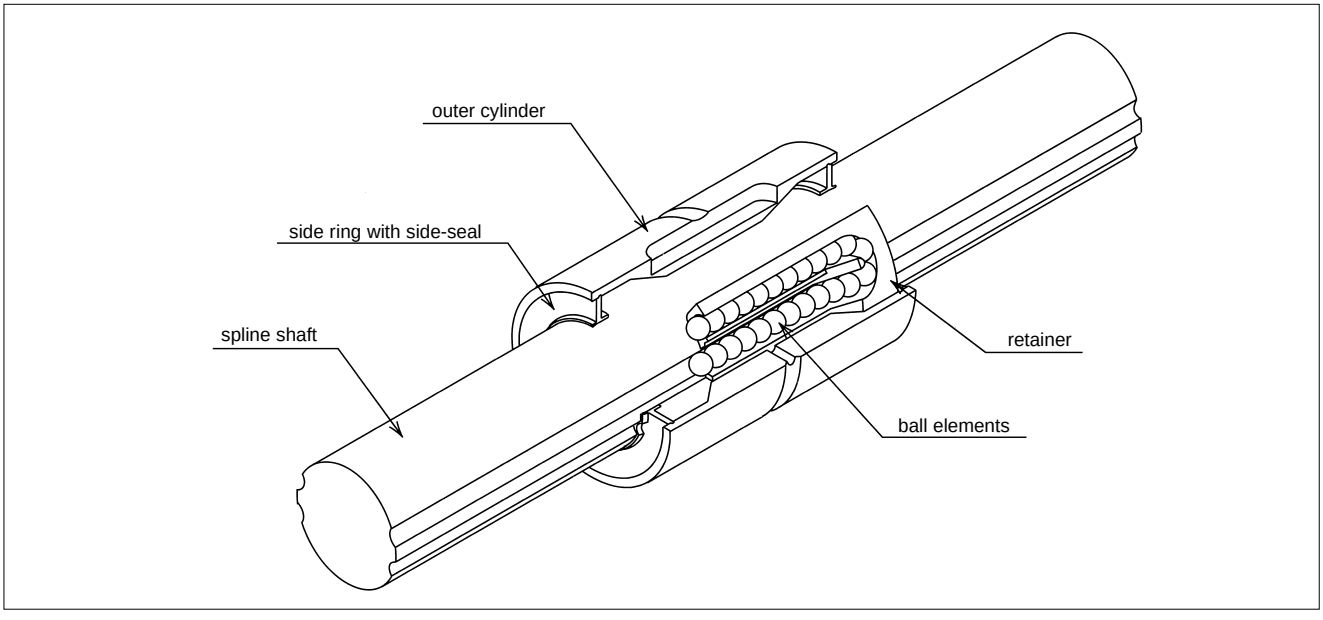

www.bergab.ru Берг АБ bergab@ya.ru Тел. (495)-228-06-21, факс (495) 223-3071

www.bergab.ru Берг АБ bergab@ya.ru Тел. (495)-228-06-21, факс (495) 223-3071

TYPE

TYPES OF SPLINE NUT:

A wide variety of spline nut designs are available and all spline nuts come with a side-seal as a standard feature.

Table B-1 Types of Spline Nut

type of nut		shape and advantage		page number for dimension table
cylindrical type	SSP	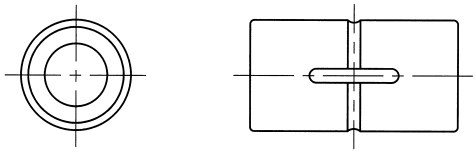	• cylindrical spline nut with key groove • with special key • nominal diameter: 4mm-100mm	P.B-16
	SSPM	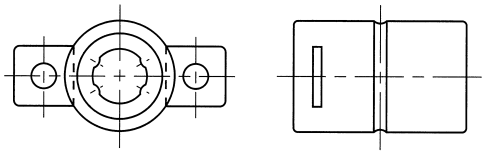	• cylindrical spline nut without key groove • with two lock plates for fixing • nominal diameter: 6mm-10mm	P.B-18
flange type	SSPF	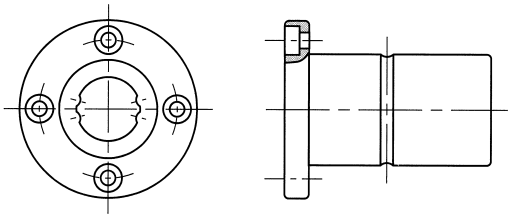	• spline nut with flange • nominal diameter: 6mm-60mm	P.B-20
	SSPT	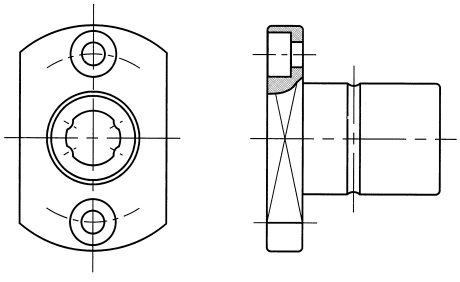	• spline nut with a two side cut flange • nominal diameter: 6mm-10mm	P.B-22

www.bergab.ru Берг АБ bergab@ya.ru Тел. (495)-228-06-21, факс (495) 223-3071

www.bergab.ru Берг АБ bergab@ya.ru Тел. (495)-228-06-21, факс (495) 223-3071

Table B-2 Types of Spline Nut

type of nut		shape and advantage	page number for dimension table
block type	SPA	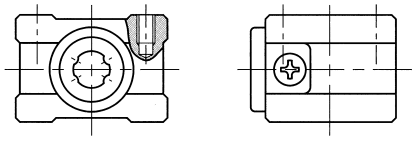 • aluminum housing • lightweight and compact • with keyless spline • nominal diameter: 6mm-10mm	P.B-24
	SPA-W	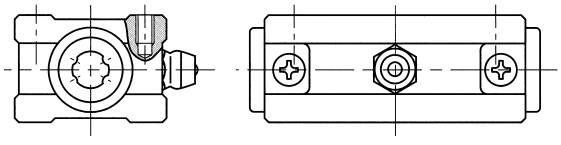 • aluminum housing • can sustain high moment loading • with two keyless splines • with grease fitting • nominal diameter: 6mm-10mm	P.B-26
	SSPB	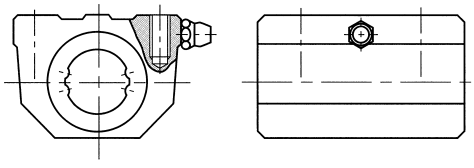 • cast block • spline grooves are machined directly on main body • high rigidity • with grease fitting • nominal diameter: 20mm-40mm	P.B-28

www.bergab.ru Берг АБ bergab@ya.ru Тел. (495)-228-06-21, факс (495) 223-3071

www.bergab.ru Берг АБ bergab@ya.ru Тел. (495)-228-06-21, факс (495) 223-3071

TYPES OF SPLINE SHAFT:

Depending on the application requirements, either a fully machine ground spline shaft or a commercial grade spline shaft can be specified.

Table B-3 Types of Spline Shaft

type of spline shaft	shape and advantage	
ground spline shaft		• precision-ground and precision machined surface finish • high precision • possible to machine ends of spline shaft and surface finish • nominal diameter: 4mm-100mm
standard spline shaft		• standard dimension and shape • accuracy grade: high grade • short lead time • nominal diameter: 4mm-60mm (Refer to page B-30)
commercial shaft (non-ground)		• for general industrial use • with special finished raceway surface • low cost • possible to machine end of shaft and surface finish • nominal diameter: 20mm-50mm • maximum length: 5000mm (Refer to page B-31)

www.bergab.ru Берг АБ bergab@ya.ru Тел. (495)-228-06-21, факс (495) 223-3071

www.bergab.ru Берг АБ bergab@ya.ru Тел. (495)-228-06-21, факс (495) 223-3071

ACCURACY

The NB ball spline is measured for accuracy at points shown in Figure B-2 and categorized as either high-grade or precision-grade (P). Contact NB for accuracy information on the commercial type ball spline.

Table B-4 Tolerance of Spline Shaft and groove torsion

type of shaft	ground shaft	
accuracy grade	high	precision (P)
tolerance	13μm/100mm	6μm/100mm

Figure B-2 Accuracy Measurement Points

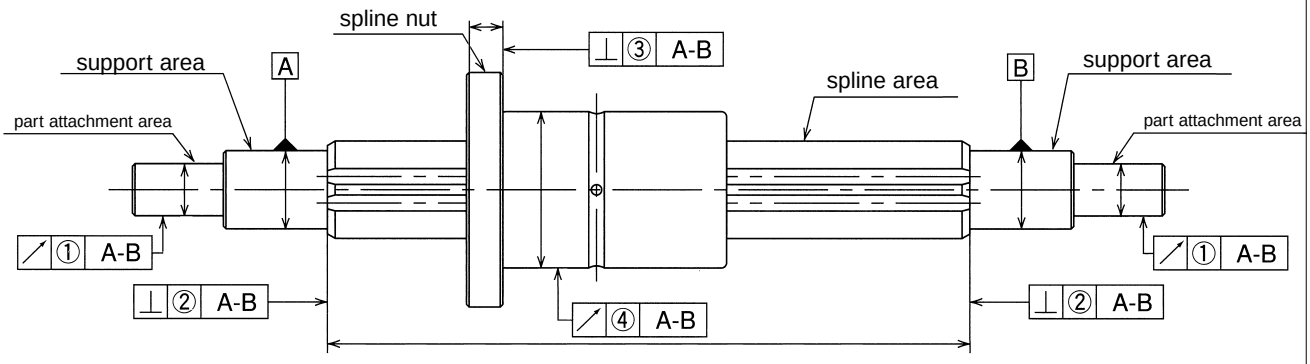

Note: The support area is the portion where, for example, radial bearings are attached in order to support the spline shaft.
The part attachment area is the portion to which other parts, such as gears are attached.

Table B-5 Maximum Tolerance for Spline Support Area

unit/μm

part number	radial run-out at part attachment area ①		perpendicularity of spline-shaft end surface ②		perpendicularity of flange attachment surface ③	
	high-grade	precision-grade	high-grade	precision-grade	high-grade	precision-grade
SSP 4	14	8	9	6	–	–
SSP 6					11	8
SSP 8						
SSP 10	17	10			13	9
SSP 13A	19	12	11	8		
SSP 16A						
SSP 20						
SSP 25	22	13	13	9	16	11
SSP 30						
SSP 40	25	15	16	11	19	13
SSP 50						
SSP 60	29	17	19	13	22	15
SSP 80・80L					–	–
SSP100・100L	34	20	22	15		

www.bergab.ru Берг АБ bergab@ya.ru Тел. (495)-228-06-21, факс (495) 223-3071

www.bergab.ru Берг АБ bergab@ya.ru Тел. (495)-228-06-21, факс (495) 223-3071

Table B-6 Maximum Radial Run-Out of Spline Nut Outer Surface Relative to Spline Shaft Support Area④ unit/μm

total length of spline shaft (mm)		part number													
		SSP4 SSP6 SSP8		SSP10		SSP13A SSP16A		SSP20 SSP25 SSP30		SSP40 SSP50		SSP60 SSP80 SSP80L		SSP100 SSP100L	
greater than	or less	high-grade	precision grade	high-grade	precision grade	high-grade	precision grade	high-grade	precision grade	high-grade	precision grade	high-grade	precision grade	high-grade	precision grade
–	200	46	26	36	20	34	18	32	18	32	16	30	16	30	16
200	315	89	57	54	32	45	25	39	21	36	19	34	17	32	17
315	400	126★	82★	68	41	53	31	44	25	39	21	36	19	34	17
400	500	163★	108★	82	51	62	38	50	29	43	24	38	21	35	19
500	630	–	–	102	65	75	46	57	34	47	27	41	23	37	20
630	800	–	–	–	–	–	–	68	42	54	32	45	26	40	22
800	1,000	–	–	–	–	–	–	83	52	63	38	51	30	43	24
1,000	1,250	–	–	–	–	–	–	102	65	76	47	59	35	48	28
1,250	1,600	–	–	–	–	–	–	130	85	93	59	70★	43★	55	33
1,600	2,000	–	–	–	–	–	–	171	116	118	77	86★	54★	–	–

★SSP4 maximum fabrication length: 300mm; SSP6 maximum fabrication length: 400mm; SSP80, 80L, 100 and 100L maximum fabrication length: 1500mm
★★For lengths exceeding 2000mm, contact NB.

PRE-LOAD AND CLEARANCE IN ROTATIONAL DIRECTION

Both the clearance and pre-load are expressed in terms of clearance in the rotational direction. The pre-load is categorized into three different levels : standard, light (T1), and medium (T2). A pre-load cannot be specified when using the commercial grade spline shaft.

Table B-7 Pre-Load and Clearance in Rotational Direction unit/μm

part number	standard	light (T1)	medium (T2)
SSP 4	−2～+1	−6～−2	–
SSP 6			
SSP 8			
SSP 10	−3～+1	−9～−3	
SSP 13A			−13～−7
SSP 16A			
SSP 20	−4～+2	−12～−4	−20～−12
SSP 25			
SSP 30			
SSP 40	−6～+3	−18～−6	−30～−18
SSP 50			
SSP 60			
SSP 80(L)			
SSP100(L)	−8～+4	−24～−8	−40～−24

Table B-8 Operating Condition and Pre-Load

pre-load	pre-load symbol	operating condition
standard	–	Minute vibration is applied. A precise motion is required. A torque in a given direction is applied.
light	T1	Slight vibration is applied. Slight torsional load is applied. Cyclic torque is applied
medium	T2	Shock/vibration is applied. Over-hang load is applied. Torsional load is applied.

www.bergab.ru Берг АБ bergab@ya.ru Тел. (495)-228-06-21, факс (495) 223-3071

www.bergab.ru Берг АБ bergab@ya.ru Тел. (495)-228-06-21, факс (495) 223-3071

LIFE CALCULATION

Because ball elements are used as the rolling elements in ball splines, the following equations are used to calculate the life of ball spline systems.

For radial load

$$L = \left(\frac{fc}{fw} \cdot \frac{C}{P} \right)^3 \cdot 50$$

For torsional load

$$L = \left(\frac{fc}{fw} \cdot \frac{C_T}{T} \right)^3 \cdot 50$$

L : travel life (km)
fc : contact coefficient
fw: Load coefficient
C : basic dynamic load rating(N)
P : load(N) C_T : basic dynamic torque rating(N-m)
T : torque(N-m)
** The rated load for the commercial spline shaft is approximately 70% of the standard ball spline shaft.

Figure B-3 Radial Loading and Torque Loading

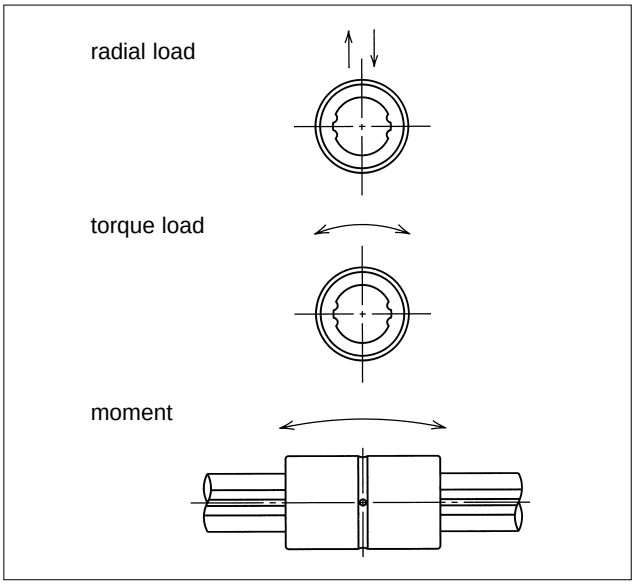

OPERATING CONDITIONS

The performance of a ball spline system is affected by the operating condition and environment of the application. The operating conditions should therefore be carefully taken into consideration.

Dust Prevention:

The introduction of foreign particles and dust may affect the motion characteristics and shorten the life of a ball spline. In a typical operating environment, seals work well. However, they may not prevent the entry of foreign particles in a hostile environment. When used in such an environment, the ball spline should be protected using bellows and protective covers.

Operating Temperature:

The ball retainers used in ball spline nuts are made of resin, so the operating temperature should never exceed 80°C.

Figure B-4 Examples of Dust Prevention Methods

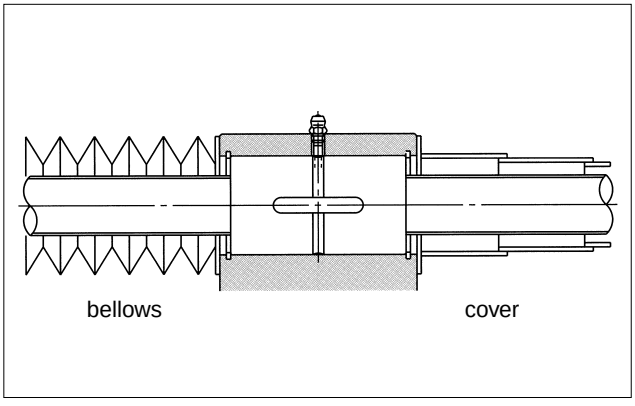

Excessive Moment:

The allowable load for ball splines is high, and they can also sustain high moment load. However, when the load becomes excessive, the load applied to the raceway grooves becomes unbalanced and stable motion may not be achieved. When accuracy is required, the application of excessive moment should be prevented by using two or more spline nuts.

www.bergab.ru Берг АБ bergab@ya.ru Тел. (495)-228-06-21, факс (495) 223-3071

www.bergab.ru Берг АБ bergab@ya.ru Тел. (495)-228-06-21, факс (495) 223-3071

LUBRICATION

Both ends of the spline nut have a side-seal as a standard feature. For the fully ground spline shaft, the side-seals are positioned against the spline shaft so as to prevent the lubricant from leaking out of the spline nut.
Lithium soap grease is applied to NB ball spline nuts before shipping, so there is no need to apply lubricant at the time of installation. However, a small amount of lubricant may be lost during operation, so the lubricant needs to be replenished periodically.

Figure B-5 Example of Lubrication Mechanism

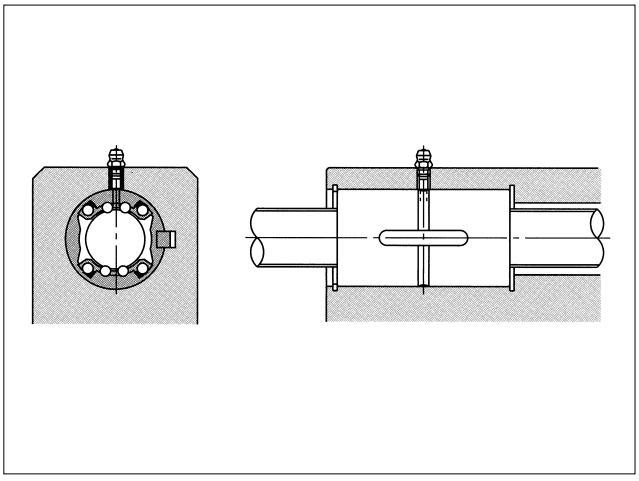

SPECIAL REQUIREMENTS

NB will fablicate custom shafts, spline nut, surface finish, etc. to meat customer requirements.
For hollow spline shafts, recommended standard inner diameters are listed in Table B-9. Contact NB for details.

Figure B-6 Example of End-Machining

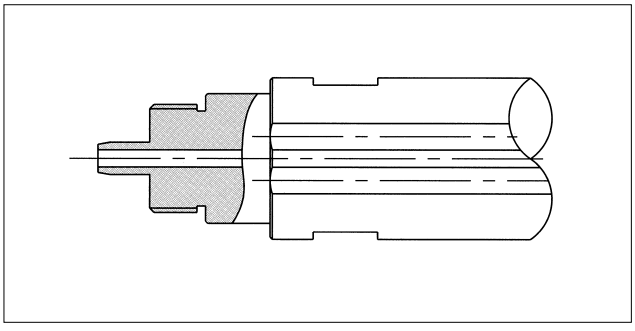

Table B-9 Recommended Inner Diameter for Hollow Spline Shaft

part number	shaft diameter Ds mm	inner diameter d mm	cross-sectional coefficient Z mm^3	second moment of inertia I mm^4
SSP 4	4	1.5	5.7	11
SSP 6	6	2	19.4	58
SSP 8	8	3	46.5	186
SSP 10	10	4	89.6	448
SSP 13A	13	6	193	1,260
SSP 16A	16	8	348	2,780

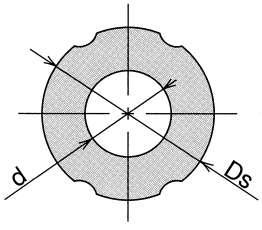

www.bergab.ru Берг АБ bergab@ya.ru Тел. (495)-228-06-21, факс (495) 223-3071

www.bergab.ru Берг АБ bergab@ya.ru Тел. (495)-228-06-21, факс (495) 223-3071

MOUNTING

Fit:

A transition fit between an SSP/SSPM-type spline nut and its housing bore is used to minimize the clearance. If high accuracy is not required, then a clearance fit clearance is used.

For the SSP/SSPM type spline nuts, if only a light load is to be applied, a hole slightly larger than the outer diameter of the nut will suffice.

Insertion of Spline Nut:

When inserting a spline nut into the housing, use a jig, example as shown in Figure B-7. Carefully insert the nut so as not to hit the side ring and side-seal.

Table B-11 Recommended Jig Dimensions unit/mm

part number	D	d	part number	D	d
SSP4	9.5	3.5	SSP30	44.5	25
SSP6	13.5	5	SSP40	59.5	33
SSP8	15.5	7	SSP50	74	41
SSP10	20.5	8.5	SSP60	89	50
SSP13A	23.5	12	SSP80	119	74
SSP16A	30.5	14.5	SSP80L		
SSP20	31.5	16.5	SSP100	149	92
SSP25	36.5	20.5	SSP100L		

Insertion of Spline Shaft:

Insertion of Spline Shaft: When inserting the spline shaft into the spline nut, ensure that the ball elements do not drop out. This is accomplished by aligning the raceway grooves of the shaft with the rows of ball elements in the nut. Then simply insert the spline shaft through the spline nut.

Table B-10 Fit for the Spline Nut

type of spline nut	clearance fit	transition fit
SSP	H7	J6
SSPM		

Figure B-7 Insertion of Spline Nute into Housing

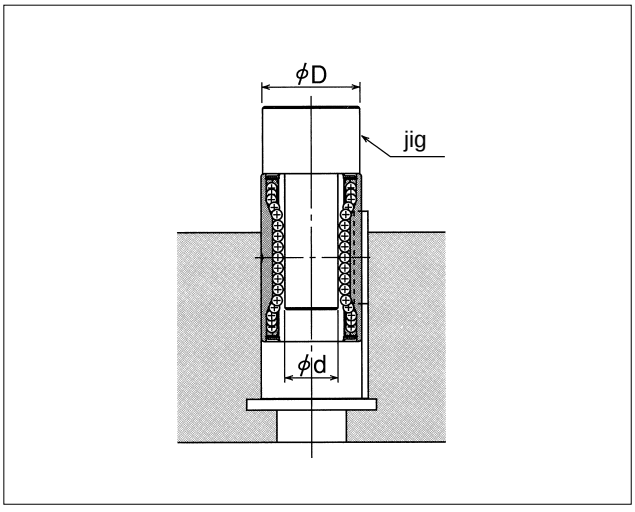

www.bergab.ru Берг АБ bergab@ya.ru Тел. (495)-228-06-21, факс (495) 223-3071

www.bergab.ru Берг АБ bergab@ya.ru Тел. (495)-228-06-21, факс (495) 223-3071

Mounting of SSP Type Spline:

Example methods for mounting the SSP type spline is shown in Figures B-8 and B-9.

Figure B-8 Using a Retaining Ring

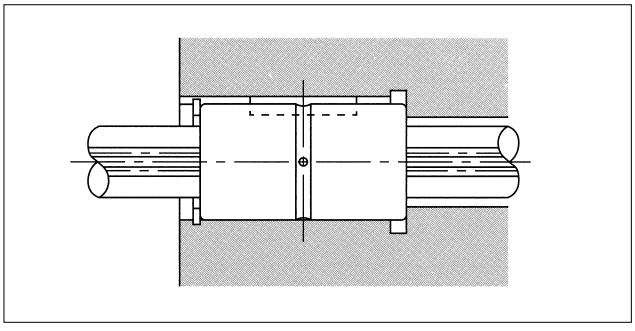

Figure B-9 Using a Push Plate

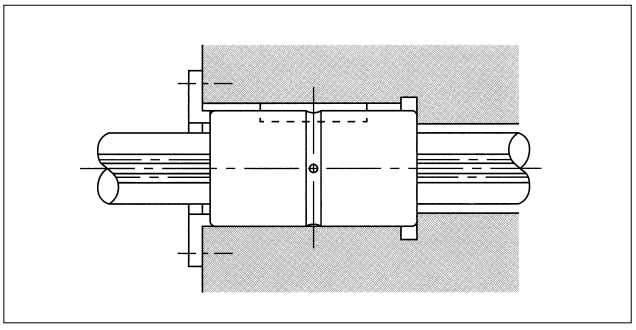

Key:

The SSP type spline comes with a key, as shown in Figure B-10.

Figure B-10 Key for SSP Type Spline

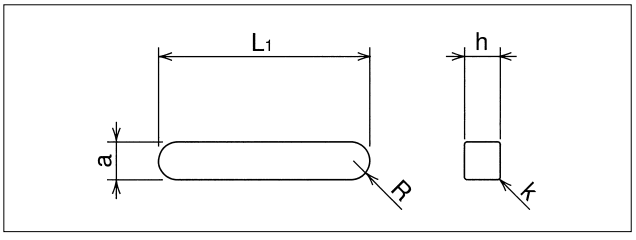

Table B-12 Major Dimensions of Key (SSP Type)

part number	a mm	a tolerance μm	h mm	h tolerance μm	L_1 mm	R mm	k mm
SSP 4	2	+16 + 6	2	0 −25	6	1	0.2
SSP 6	2.5		2.5		10.5	1.25	
SSP 8	2.5		2.5		10.5	1.25	
SSP 10	3		3		13	1.5	
SSP 13A	3		3		15	1.5	
SSP 16A	3.5	+24 +12	3.5	0 −30	17.5	1.75	
SSP 20	4		4		26	2	
SSP 25	5		5		33	2.5	0.3
SSP 30	7	+30 +15	7	0 −36	41	3.5	
SSP 40	10		8		55	5	0.5
SSP 50	15	+36 +18	10		60	7.5	
SSP 60	18		11	0/−43	68	9	
SSP 80	16		10	0 −36	76	8	
SSP 80L					110		
SSP100	20	+43 +22	13	0 −43	110	10	0.8
SSP100L					160		

www.bergab.ru Берг АБ bergab@ya.ru Тел. (495)-228-06-21, факс (495) 223-3071

www.bergab.ru Берг АБ bergab@ya.ru Тел. (495)-228-06-21, факс (495) 223-3071

Mounting of SSPM Type Spline:

Example methods for installing the SSPM spline is shown in Figures B-11 to B-14.

Figure B-11 Using an F Type Lock Plate

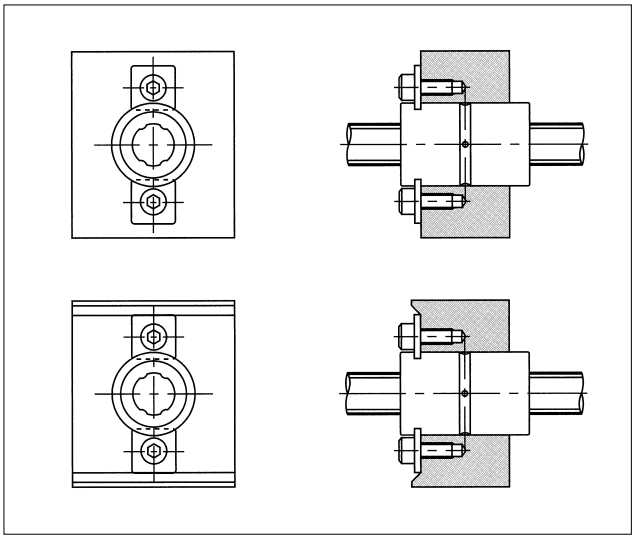

Figure B-12 Using an LP Type Lock Plate

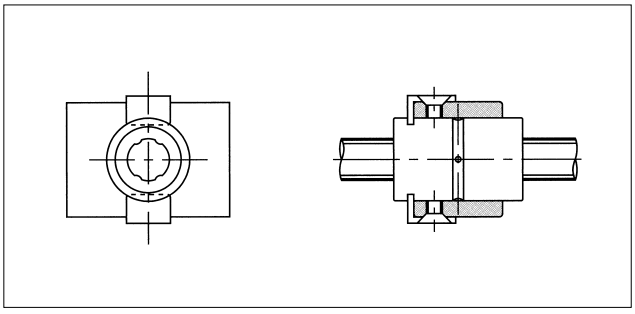

Figure B-13 Using a Special Lock Plate (1)

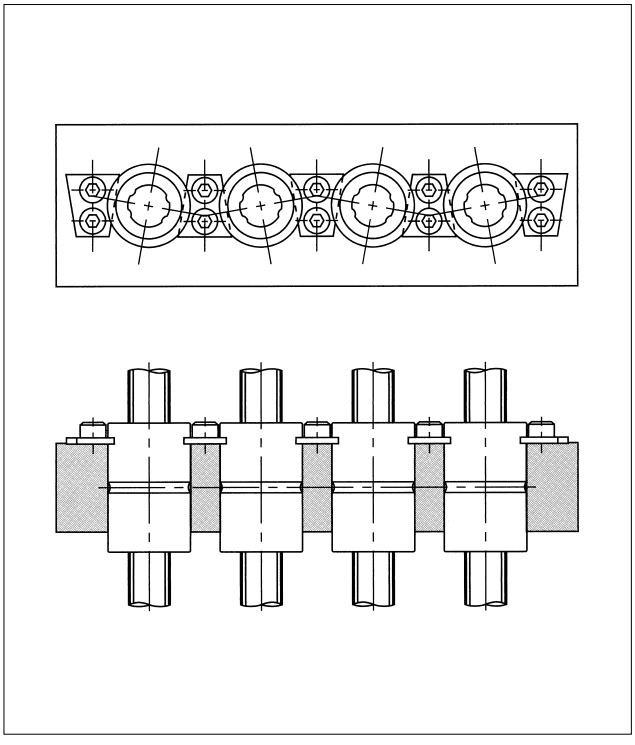

Figure B-14 Using a Special Lock Plate (2)

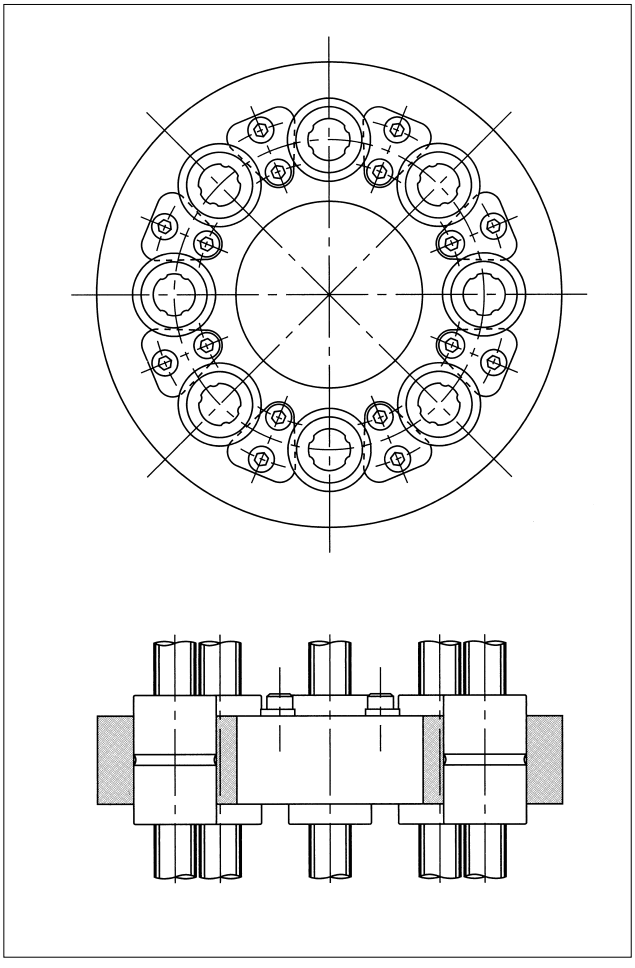

www.bergab.ru Берг АБ bergab@ya.ru Тел. (495)-228-06-21, факс (495) 223-3071

www.bergab.ru Берг АБ bergab@ya.ru Тел. (495)-228-06-21, факс (495) 223-3071

F Type Lock Plate (Standard Part):

The lock plate shown in Figure B-15 is provided with the SSPM spline.

Material: SUS304CSP

Figure B-15 F Type Lock Plate

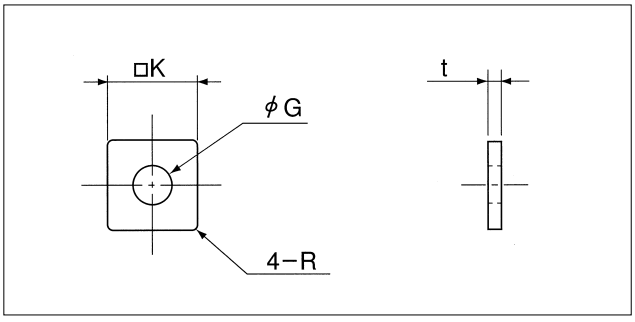

Table B-13 F Type Lock Plate

part number	K mm	G mm	t mm	R mm	applicable spline nut
FP 6	6.8	2.9	1.0	0.5	SSPM 6
FP 8	8.5	3.5	1.2	0.5	SSPM 8
FP10	8.5	3.5	1.2	0.5	SSPM10

LP Type Lock Plate (Purchased Separately):

An LP type lock plate is also available for use with the SSPM spline.

Material: SUS304CSP

Figure B-16 LP Type Lock Plate

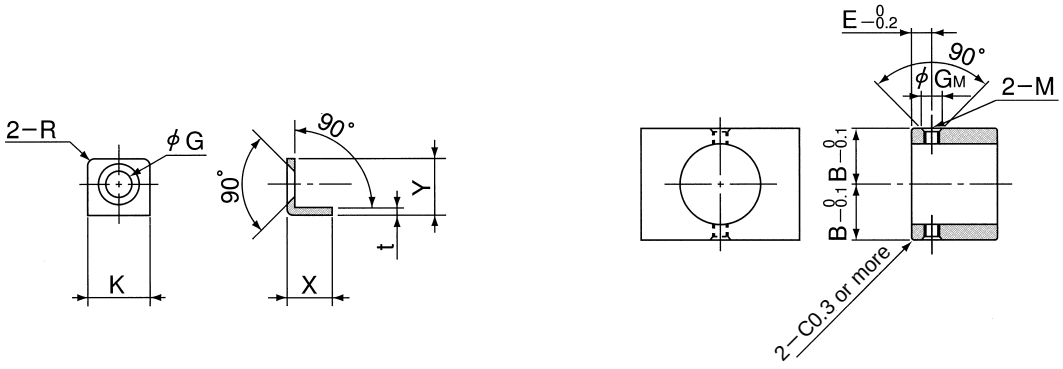

When using the LP type lock plate, machine the housing as shown.

Table B-14 LP Type Lock Plate

part number	lock plate major dimensions						machined housing dimensions				applicable spline nut
	K mm	G mm	t mm	R mm	X mm	Y mm	B mm	E mm	G_M mm	M	
LP 6	8.6	4.3	1.0	1	5.85	7.8	11.1	3.3	3.5	M2.5	SSPM 6
LP 8	9.15	5.0	1.2	1	6.45	9.2	12.3	4.0	4.0	M3	SSPM 8
LP10	9.15	5.0	1.2	1	6.45	9.2	14.8	4.0	4.0	M3	SSPM10

www.bergab.ru Берг АБ bergab@ya.ru Тел. (495)-228-06-21, факс (495) 223-3071

www.bergab.ru Берг АБ bergab@ya.ru Тел. (495)-228-06-21, факс (495) 223-3071

Mounting of SSPF Type Spline:

Example methods for mounting the SSPF spline are shown in Figure B-17.

Figure B-17 Example Methods for mounting SSPF Type Spline

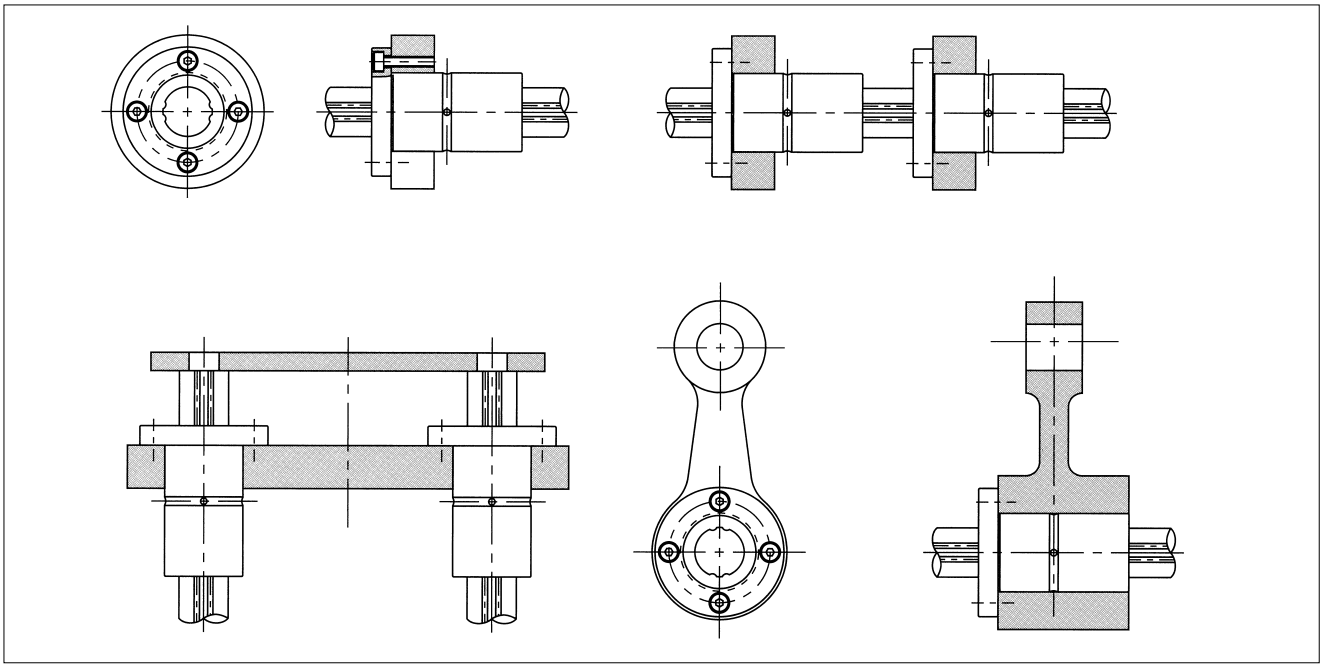

Mounting of SSPT Spline:

Example methods for mounting the SSPT spline are shown in Figure B-18.

Figure B-18 Example Methods for mounting SSPT Type Spline

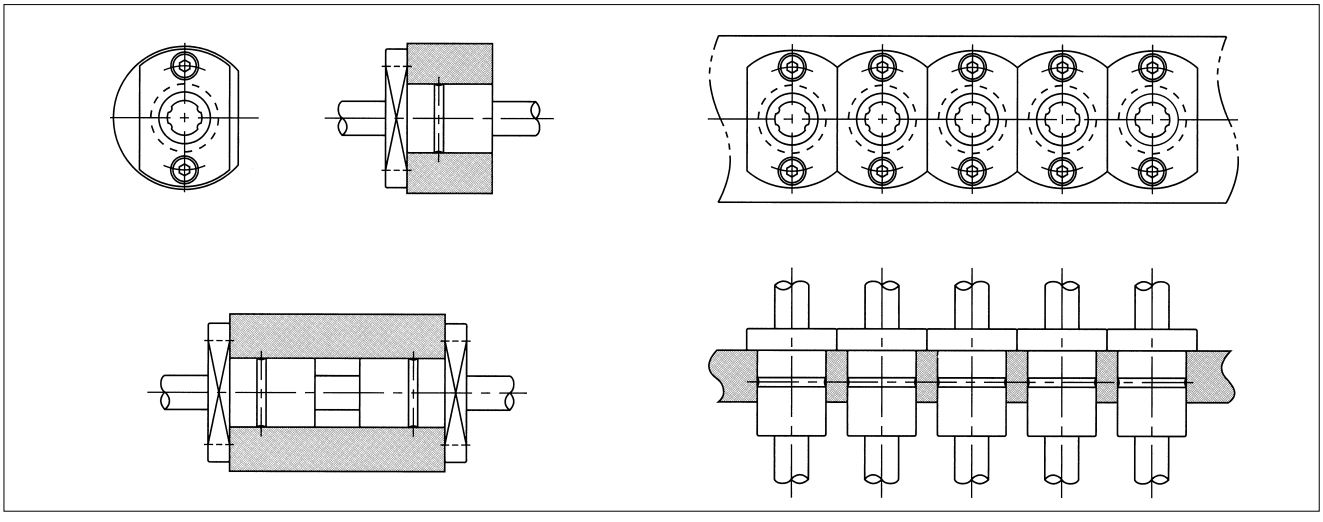

www.bergab.ru Берг АБ bergab@ya.ru Тел. (495)-228-06-21, факс (495) 223-3071

www.bergab.ru Берг АБ bergab@ya.ru Тел. (495)-228-06-21, факс (495) 223-3071

Mounting of Block Type Spline:

Example methods for mounting the block spline are shown in Figure B-19.

Figure B-19 Example Methods for mounting Block Type Spline

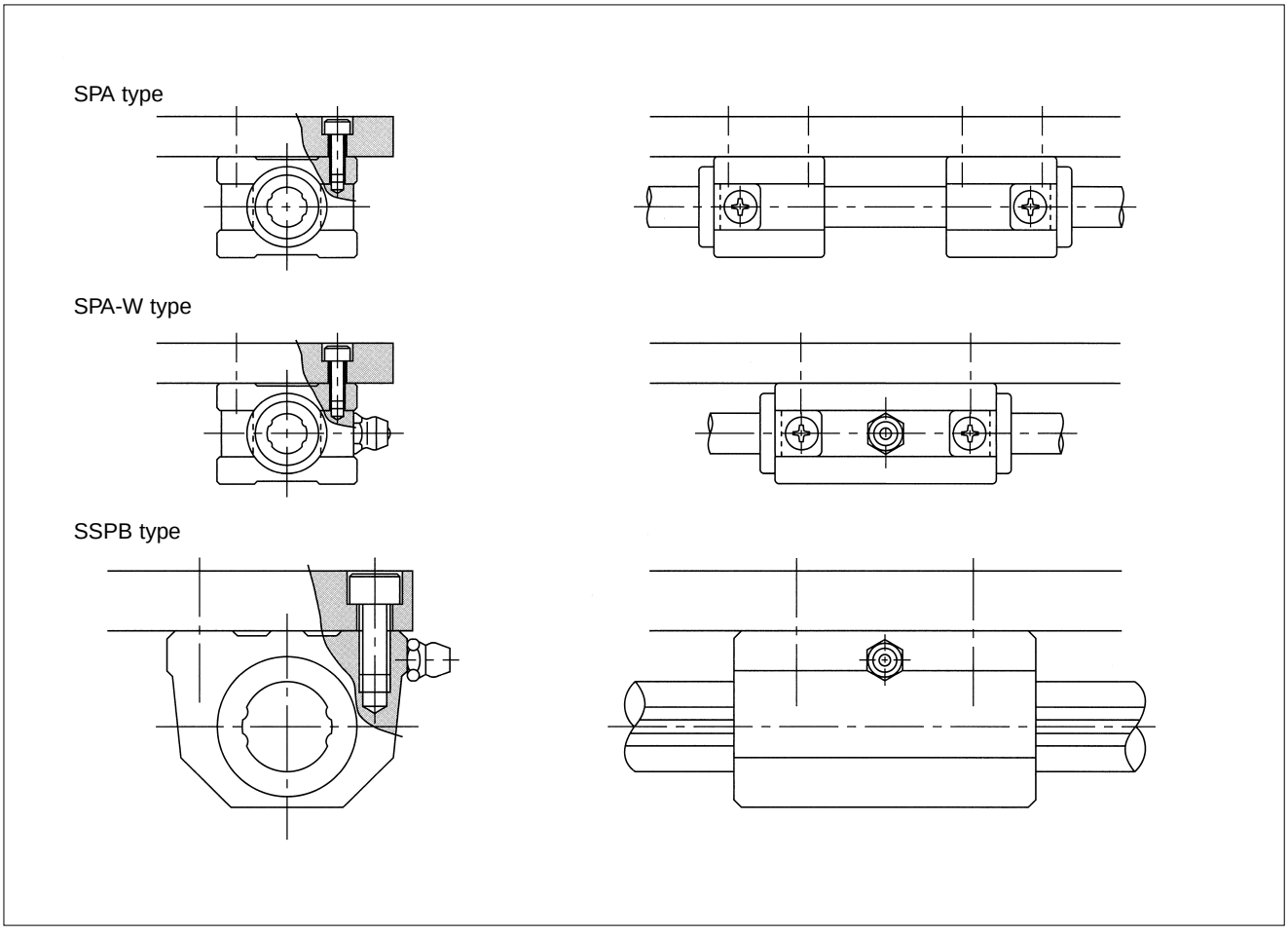

www.bergab.ru Берг АБ bergab@ya.ru Тел. (495)-228-06-21, факс (495) 223-3071

www.bergab.ru Берг АБ bergab@ya.ru Тел. (495)-228-06-21, факс (495) 223-3071

SSP TYPE

− Cylindrical Spline Nut −

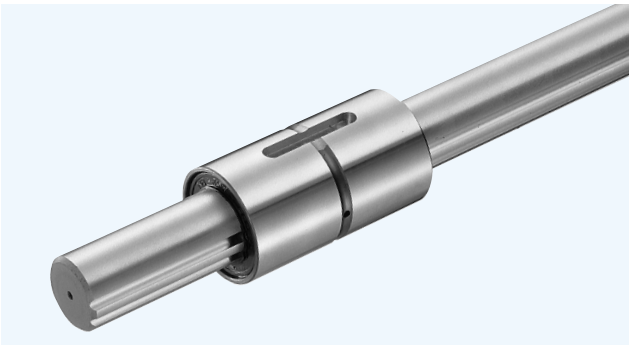

part number structure

example **SSP** **80** **L** - **2** - **T1** - **600** - **P** / **CU**

- SSP type
- nominal diameter
- nut length

blank	standard
L	long

- number of nuts attached to one shaft
- pre-load symbol

blank	standard
T1	light
T2	medium

- spline shaft total length
- accuracy grade

blank	high
P	precision

- with special specification

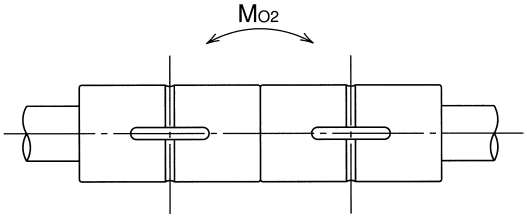

When two spline nuts are used in close contact.

part number	major dimensions											
	D		L		B	b		t	L_1	d	Ds	
	mm	tolerance μm	mm	tolerance mm	mm	mm	tolerance μm	+0.05 0 mm	mm	mm	mm	tolerance μm
SSP 4	10	0/−9	16	0 −0.2	−	2	+14 0	1.2	6	−	4	0 −12
SSP 6	14	0 −11	25			2.5		1.2	10.5	1	6	
SSP 8	16		25			2.5		1.2	10.5	1.5	8	0 −15
SSP 10	21	0 −13	33			3		1.5	13	1.5	10	
SSP 13A	24		36			3		1.5	15	1.5	13	0 −18
SSP 16A	31	0 −16	50			3.5	+18 0	2	17.5	2	16	
SSP 20	32		60			4		2.5	26	2	18.2	0 −21
SSP 25	37		70	0 −0.3		5		3	33	3	23	
SSP 30	45		80			7	+22 0	4	41	3	28	
SSP 40	60	0 −19	100			10		4.5	55	4	37.4	0 −25
SSP 50	75		112			15	+27 0	5	60	4	47	
SSP 60	90	0 −22	127			18		6	68	4	56.5	0 −30
SSP 80	120		160	−	118.2	16		6	76	5	80	
SSP 80L			217		175.2				110			
SSP100	150	0 −25	185		132.6	20	+33 0	7	110	5	100	0 −35
SSP100L			248		195.6				160			

www.bergab.ru Берг АБ bergab@ya.ru Тел. (495)-228-06-21, факс (495) 223-3071

www.bergab.ru Берг АБ bergab@ya.ru Тел. (495)-228-06-21, факс (495) 223-3071

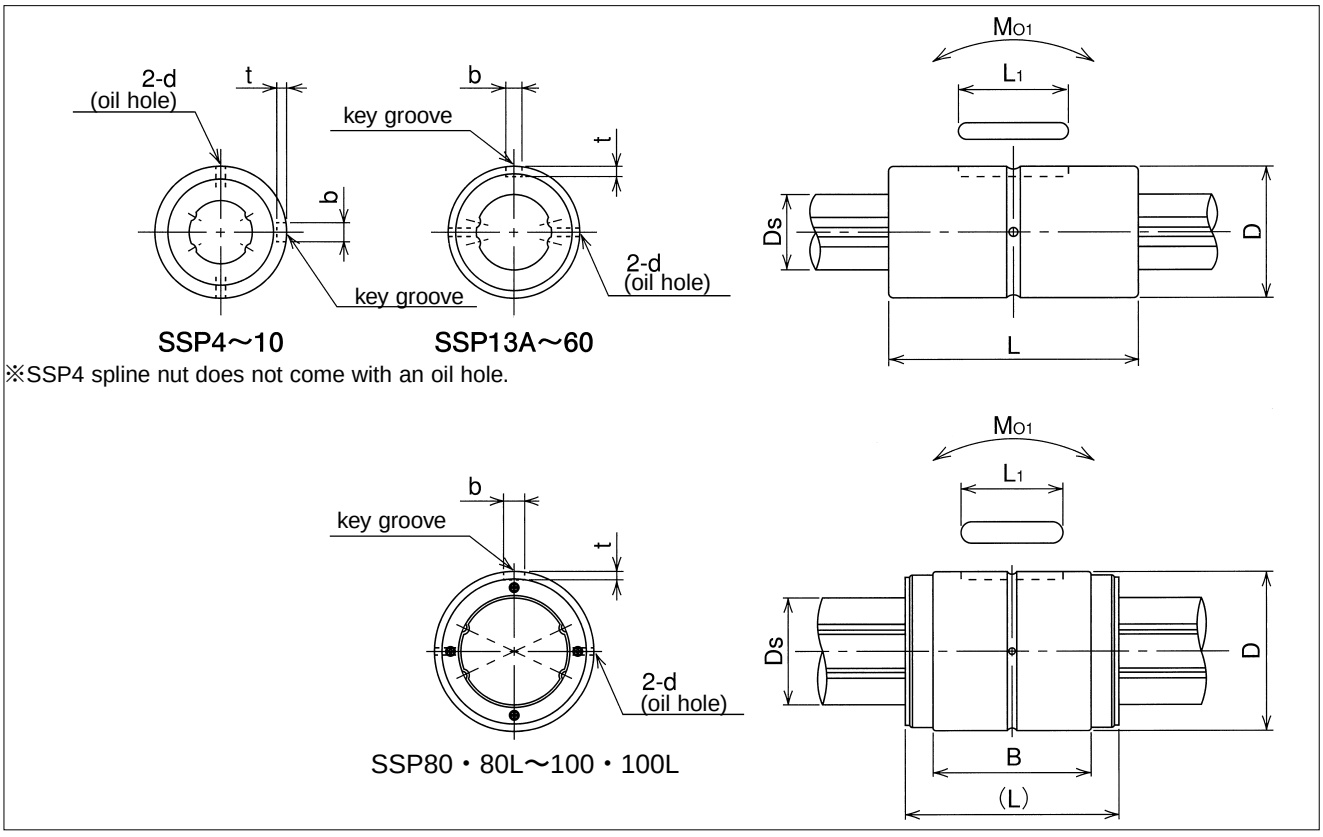

basic torque rating		basic load rating		allowable static moment		second cross-sectional moment of inertia	cross-sectional coefficient	mass		part number
dynamic	static	dynamic	static					nut	shaft	
C_T	C_{OT}	C	Co	M_{01}	M_{02}					
N・m	N・m	kN	kN	N・m	N・m	mm^4	mm^3	kg	kg/m	
0.74	1.05	0.86	1.22	1.97	10.3	1.18×10	5.90	0.0065	0.10	**SSP 4**
1.5	2.4	1.22	2.28	5.1	40	5.9×10	1.97×10	0.019	0.21	**SSP 6**
2.1	3.7	1.45	2.87	7.4	50	1.9×10^2	4.76×10	0.023	0.38	**SSP 8**
4.4	8.2	2.73	5.07	18.0	116	4.61×10^2	9.22×10	0.054	0.60	**SSP 10**
21	39.2	2.67	4.89	13.7	109	1.38×10^3	2.13×10^2	0.07	1.0	**SSP 13A**
60	110	6.12	11.2	46	299	2.98×10^3	3.73×10^2	0.15	1.5	**SSP 16A**
83	133	7.84	11.3	63	500	5.05×10^3	5.54×10^2	0.20	2.0	**SSP 20**
162	239	12.3	16.1	104	830	1.27×10^4	1.11×10^3	0.22	3.1	**SSP 25**
289	412	18.6	23.2	181	1,470	2.75×10^4	1.96×10^3	0.35	4.8	**SSP 30**
637	882	30.8	37.5	358	2,940	8.73×10^4	4.67×10^3	0.81	8.6	**SSP 40**
1,390	3,180	46.1	74.2	696	4,400	2.16×10^5	9.21×10^3	1.5	13.1	**SSP 50**
2,100	4,800	58.0	127	1,300	8,800	4.51×10^5	1.60×10^4	2.5	19	**SSP 60**
3,860	6,230	83.1	134	2,000	11,100	1.93×10^6	4.38×10^5	5.1	39	**SSP 80**
5,120	9,340	110	201	4,410	21,100			7.6		**SSP 80L**
6,750	11,570	135	199	3,360	19,300	4.69×10^6	9.38×10^5	9.7	61	**SSP100**
8,960	17,300	179	298	7,340	37,700			13.9		**SSP100L**

1kN≒102kgf　1N・m≒0.102kgf・m

www.bergab.ru Берг АБ bergab@ya.ru Тел. (495)-228-06-21, факс (495) 223-3071

www.bergab.ru Берг АБ bergab@ya.ru Тел. (495)-228-06-21, факс (495) 223-3071

SSPM TYPE

− Keyless Spline Nut −

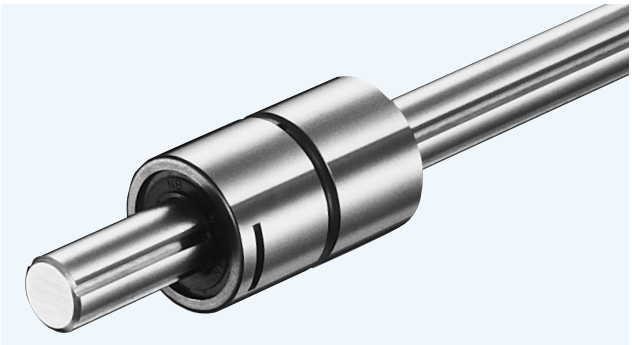

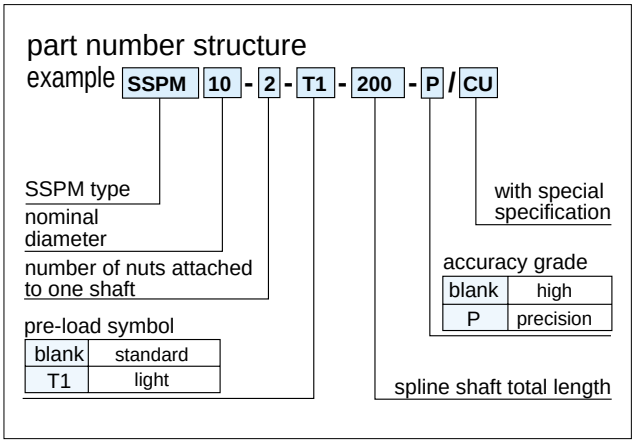

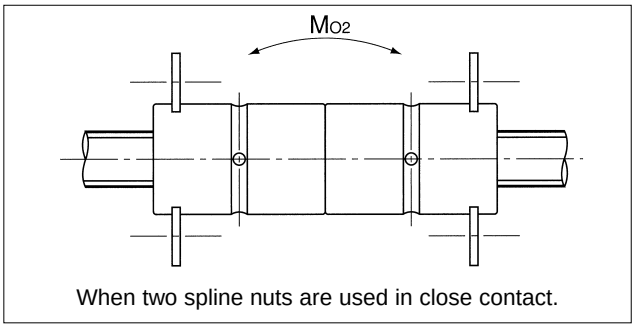

part number	major dimensions												
	D		L		F	W	C	A	d	B	H	K	G
	mm	tolerance μm	mm	tolerance mm	mm	mm	mm	mm	mm	mm	mm	mm	mm
SSPM 6	14	0 −11	25	0 −0.2	2.2	1.1	1.0	12.0	1	9.4	25.6	6.8	2.9
SSPM 8	16		25		2.7	1.3	1.2	13.6	1.5	11	30.6	8.5	3.5
SSPM10	21	0/−13	33		2.7	1.3	1.2	18.6	1.5	13.5	35.6	8.5	3.5

www.bergab.ru Берг АБ bergab@ya.ru Тел. (495)-228-06-21, факс (495) 223-3071

www.bergab.ru Берг АБ bergab@ya.ru Тел. (495)-228-06-21, факс (495) 223-3071

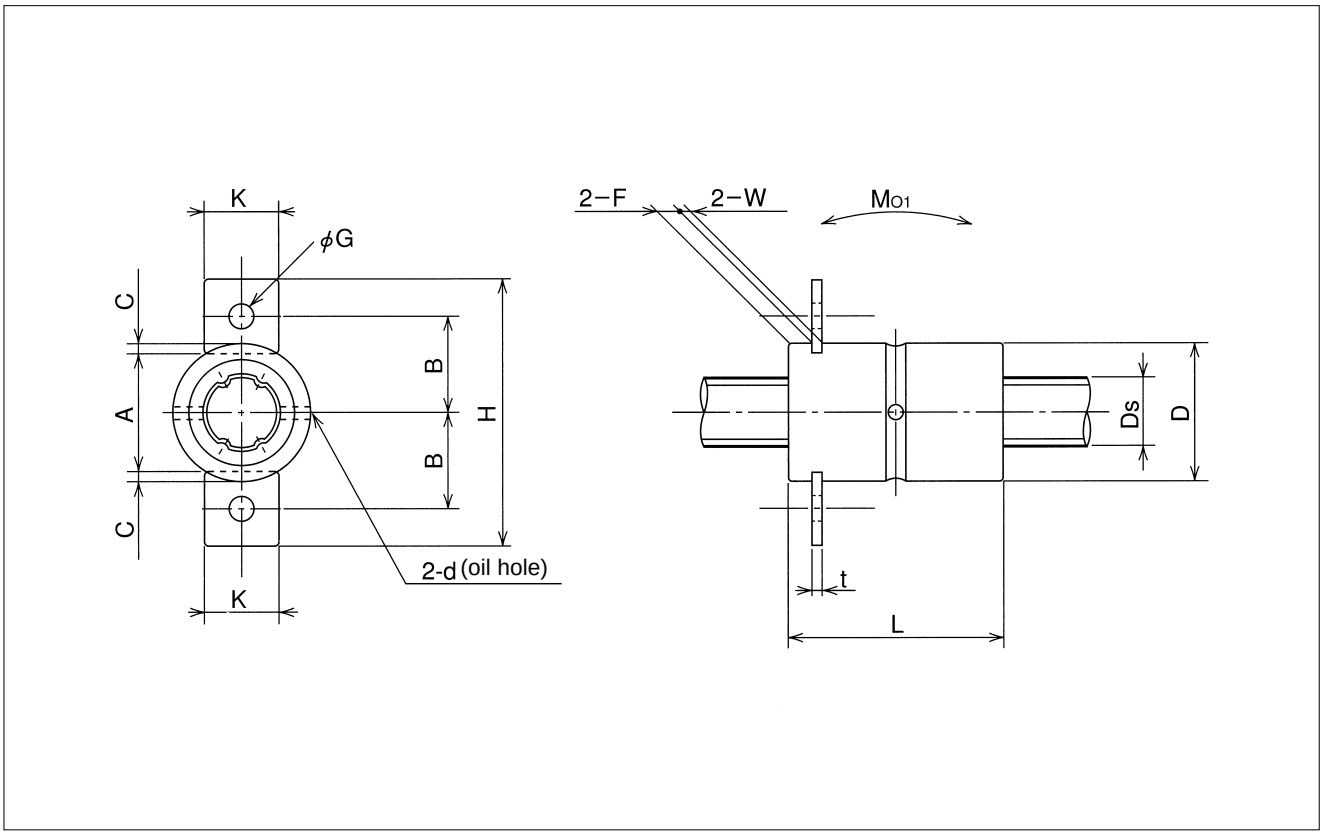

t	Ds		basic torque rating		basic load rating		allowable static moment		second cross-sectional moment of inertia	cross-sectional coefficient	mass		part number
		tolerance	dynamic	static	dynamic	static					nut	shaft	
			C_T	C_{OT}	C	Co	M_{01}	M_{02}					
mm	mm	μm	N・m	N・m	kN	kN	N・m	N・m	mm^4	mm^3	kg	kg/m	
1.0	6	0/−12	1.5	2.4	1.22	2.28	5.1	40	59	19.7	0.019	0.21	**SSPM 6**
1.2	8	0	2.1	3.7	1.45	2.87	7.4	50	190	47.6	0.023	0.38	**SSPM 8**
1.2	10	−15	4.4	8.2	2.73	5.07	18.0	116	461	92.2	0.054	0.60	**SSPM10**

1kN≒102kgf　1N・m≒0.102kgf・m

www.bergab.ru Берг АБ bergab@ya.ru Тел. (495)-228-06-21, факс (495) 223-3071

www.bergab.ru Берг АБ bergab@ya.ru Тел. (495)-228-06-21, факс (495) 223-3071

SSPF TYPE

− Flange Type Nut −

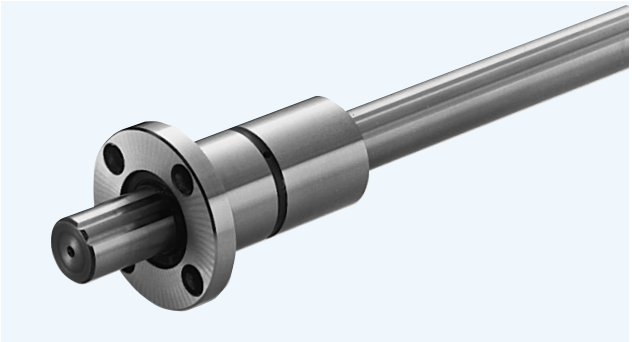

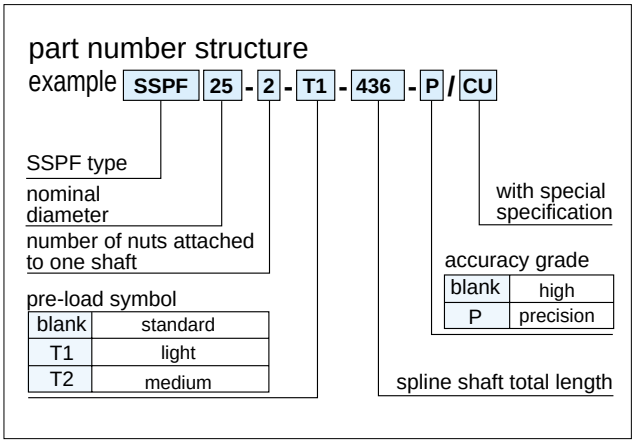

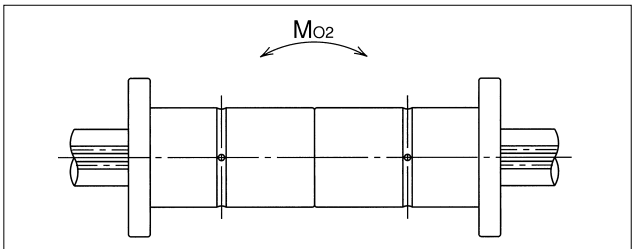

When two spline nuts are used in close contact.

part number	major dimensions									
	D		L		Df	H	P.C.D.	$d_1 \times d_2 \times h$	W	d
	mm	tolerance μm	mm	tolerance mm	mm	mm	mm	mm	mm	mm
SSPF 6	14	0 −11	25	0 −0.2	30	5	22	3.4×6.5×3.3	7.5	1
SSPF 8	16		25		32	5	24	3.4×6.5×3.3	7.5	1.5
SSPF10	21	0 −13	33		42	6	32	4.5×8×4.4	10.5	1.5
SSPF13A	24		36		43	7	33	4.5×8×4.4	11	1.5
SSPF16A	31	0 −16	50		50	7	40	4.5×8×4.4	18	2
SSPF20	32		60		51	7	40	4.5×8×4.4	23	2
SSPF25	37		70	0 −0.3	60	9	47	5.5×9.5×5.4	26	3
SSPF30	45		80		70	10	54	6.6×11×6.5	30	3
SSPF40	60	0 −19	100		90	14	72	9×14×8.6	36	4
SSPF50	75		112		113	16	91	11×17.5×11	40	4
SSPF60	90	0/−22	127		129	18	107	11×17.5×11	45.5	4

www.bergab.ru Берг АБ bergab@ya.ru Тел. (495)-228-06-21, факс (495) 223-3071

www.bergab.ru Берг АБ bergab@ya.ru Тел. (495)-228-06-21, факс (495) 223-3071

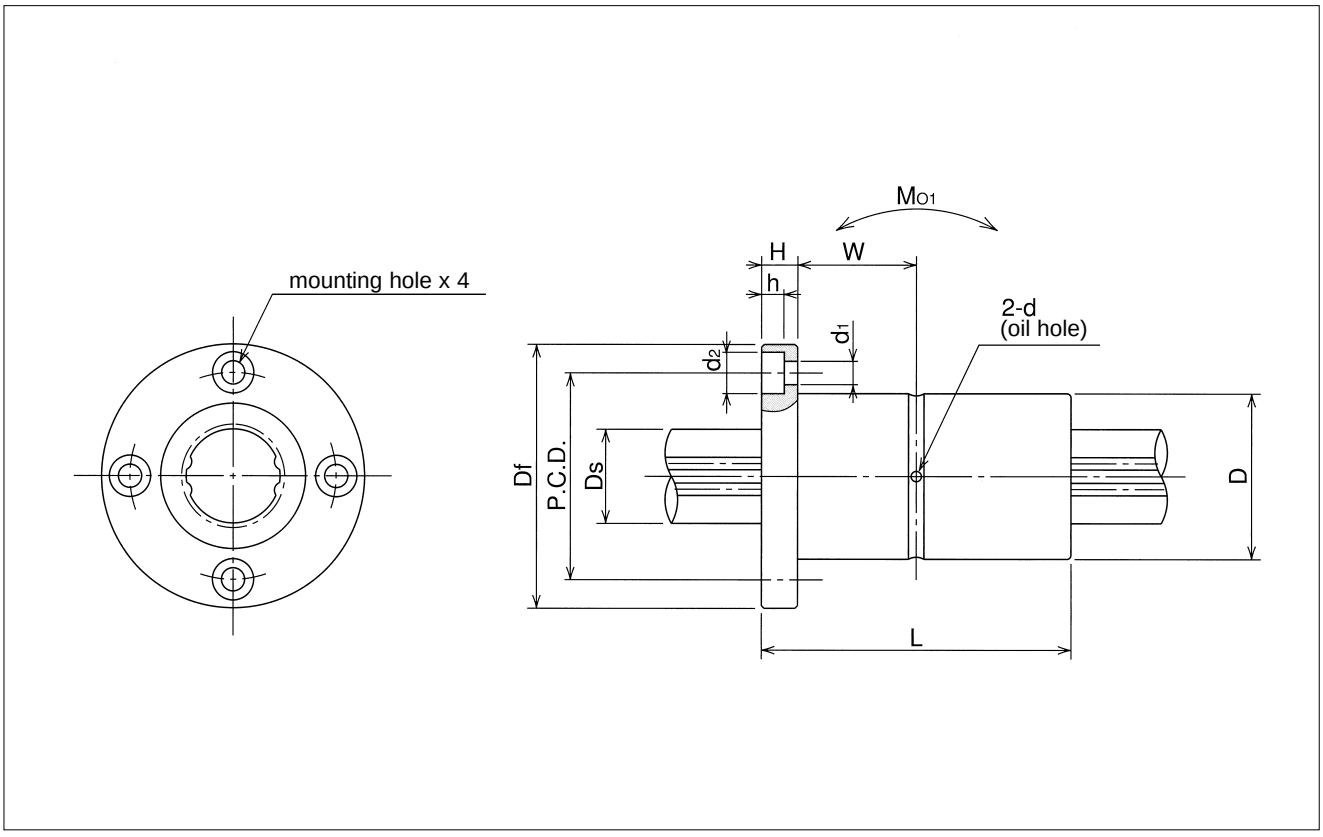

Ds mm	Ds tolerance μm	basic torque rating dynamic CT N・m	basic torque rating static COT N・m	basic load rating dynamic C kN	basic load rating static Co kN	allowable static moment M01 N・m	allowable static moment M02 N・m	second cross-sectional moment of inertia mm4	cross-sectional coefficient mm3	mass nut kg	mass shaft kg/m	part number
6	0/−12	1.5	2.4	1.22	2.28	5.1	40	59	19.7	0.037	0.21	**SSPF 6**
8	0 −15	2.1	3.7	1.45	2.87	7.4	50	190	47.6	0.042	0.38	**SSPF 8**
10		4.4	8.2	2.73	5.07	18.0	116	461	92.2	0.094	0.6	**SSPF10**
13	0 −18	21	39.2	2.67	4.89	13.7	109	1,380	213	0.1	1	**SSPF13A**
16		60	110	6.12	11.2	46	299	2,980	373	0.2	1.5	**SSPF16A**
18.2	0 −21	83	133	7.84	11.3	63	500	5,050	554	0.22	2	**SSPF20**
23		162	239	12.3	16.1	104	830	12,700	1,110	0.32	3.1	**SSPF25**
28		289	412	18.6	23.2	181	1,470	27,500	1,960	0.51	4.8	**SSPF30**
37.4	0 −25	637	882	30.8	37.5	358	2,940	87,300	4,670	1.15	8.6	**SSPF40**
47		1,390	3,180	46.1	74.2	696	4,400	216,000	9,210	2.1	13.1	**SSPF50**
56.5	0/−30	2,100	4,800	58.0	127	1,300	8,800	451,000	16,000	3.3	19	**SSPF60**

1kN≒102kgf　1N・m≒0.102kgf・m

www.bergab.ru Берг АБ bergab@ya.ru Тел. (495)-228-06-21, факс (495) 223-3071

www.bergab.ru Берг АБ bergab@ya.ru Тел. (495)-228-06-21, факс (495) 223-3071

SSPT TYPE

− Two Side Cut Flange Type −

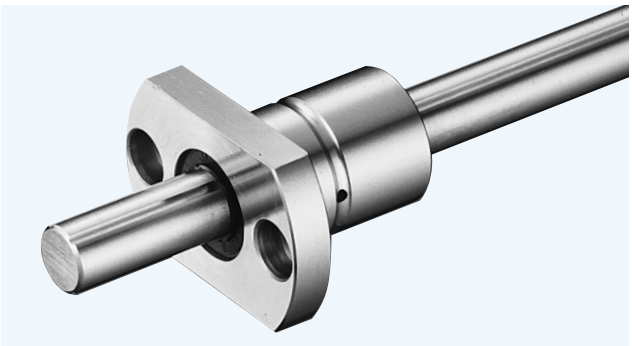

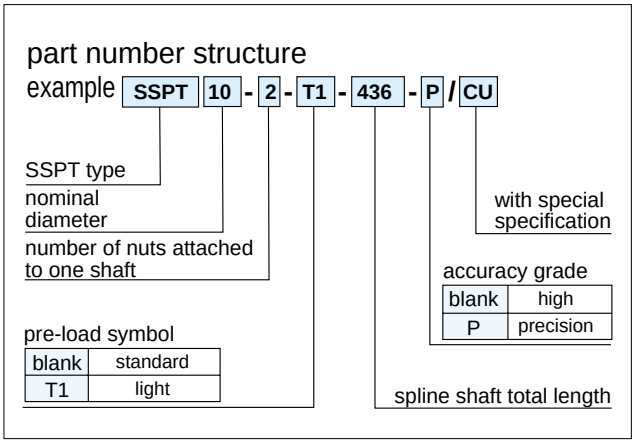

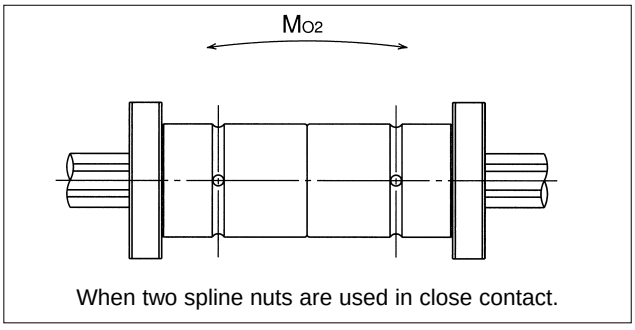

part number	major dimensions										
	D		L		Df	B	H	P.C.D.	$d_1 \times d_2 \times h$	W	d
	mm	tolerance μm	mm	tolerance mm	mm	mm	mm	mm	mm	mm	mm
SSPT 6	14	0 −11	25	0 −0.2	30	18	5	22	3.4×6.5×3.3	7.5	1
SSPT 8	16		25		32	21	5	24	3.4×6.5×3.3	7.5	1.5
SSPT10	21	0/−13	33		42	25	6	32	4.5×8×4.4	10.5	1.5

www.bergab.ru Берг АБ bergab@ya.ru Тел. (495)-228-06-21, факс (495) 223-3071

www.bergab.ru Берг АБ bergab@ya.ru Тел. (495)-228-06-21, факс (495) 223-3071

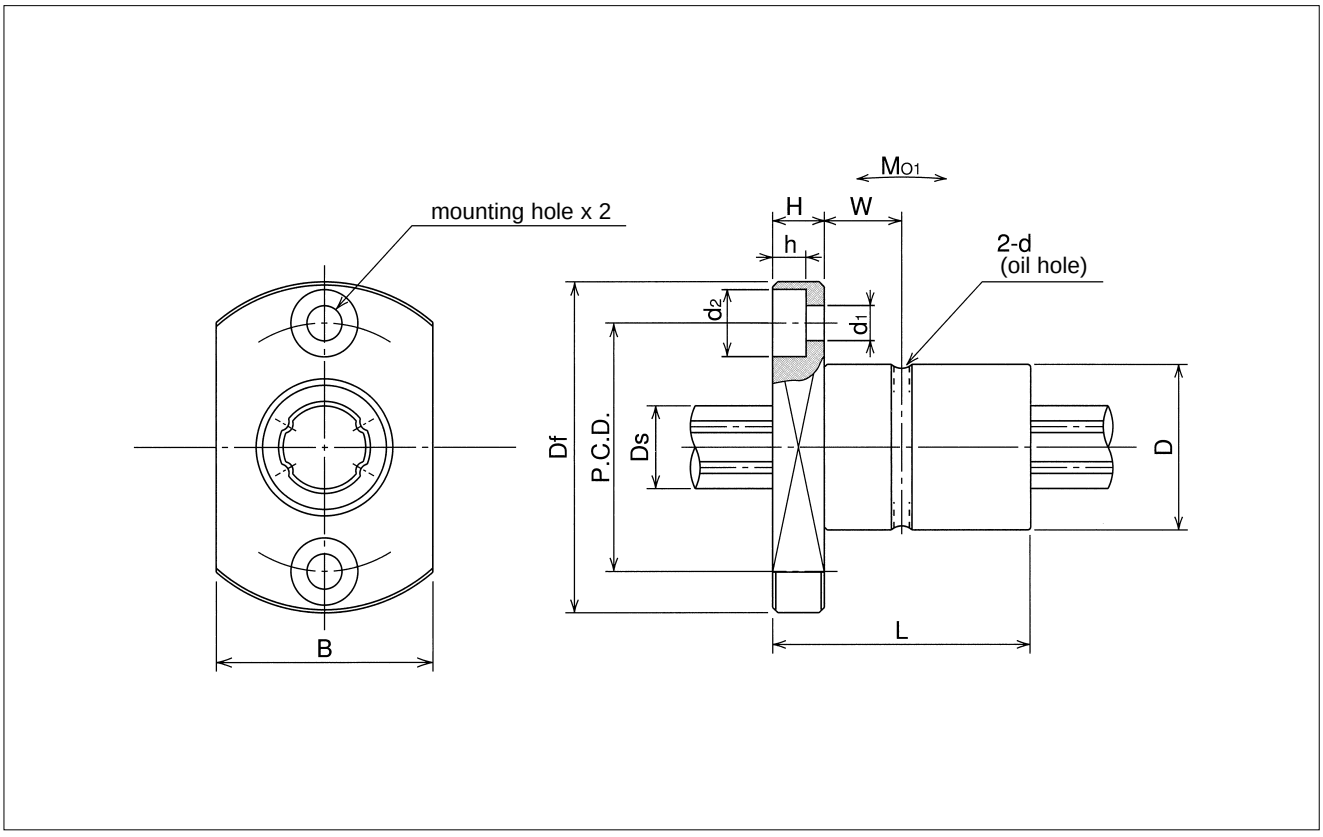

Ds mm	Ds tolerance μm	basic torque rating dynamic CT N・m	basic torque rating static COT N・m	basic load rating dynamic C kN	basic load rating static Co kN	allowable static moment M01 N・m	allowable static moment M02 N・m	second cross-sectional moment of inertia mm4	cross-sectional coefficient mm3	mass nut kg	mass shaft kg/m	part number
6	0/−12	1.5	2.4	1.22	2.28	5.1	40	59	19.7	0.029	0.21	**SSPT 6**
8	0 −15	2.1	3.7	1.45	2.87	7.4	50	190	47.6	0.035	0.38	**SSPT 8**
10		4.4	8.2	2.73	5.07	18.0	116	461	92.2	0.075	0.6	**SSPT10**

1kN≒102kgf　1N・m≒0.102kgf・m

www.bergab.ru Берг АБ bergab@ya.ru Тел. (495)-228-06-21, факс (495) 223-3071

www.bergab.ru Берг АБ bergab@ya.ru Тел. (495)-228-06-21, факс (495) 223-3071

SPA TYPE

– Keyless Block Type –

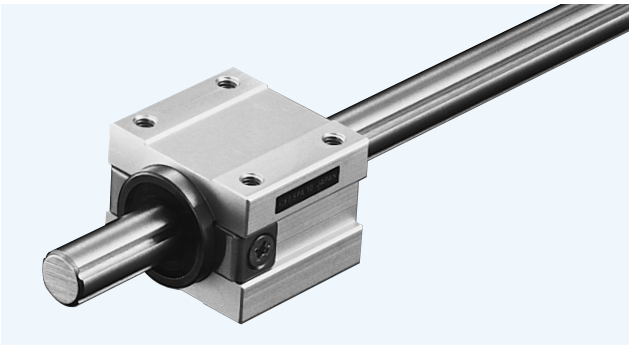

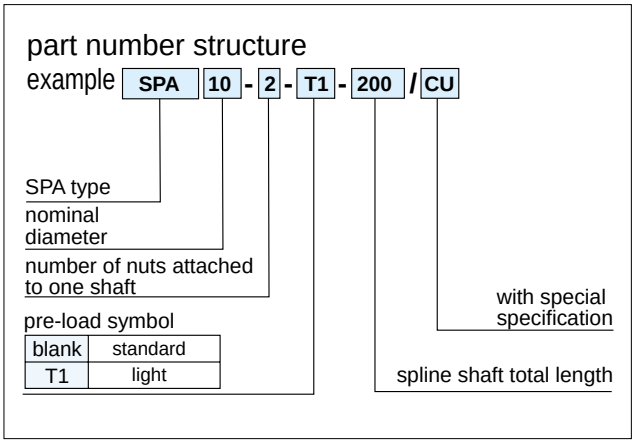

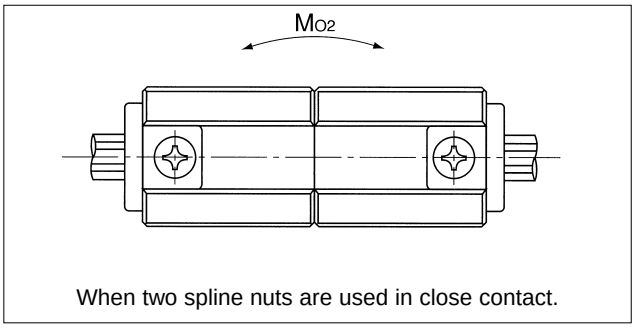

part number	major dimensions											
	h mm	E mm	W mm	L mm	F mm	L_1 mm	T mm	B mm	C mm	S	ℓ mm	D mm
SPA 6	9	12.5	25	25	18	22.5	4.2	18	16	M3	5	14
SPA 8	10	14	28	25	20	22	5	20	16	M3	5	16
SPA10	12.5	16.5	33	33	25	30	7.5	25	20	M4	6	21

www.bergab.ru Берг АБ bergab@ya.ru Тел. (495)-228-06-21, факс (495) 223-3071

www.bergab.ru Берг АБ bergab@ya.ru Тел. (495)-228-06-21, факс (495) 223-3071

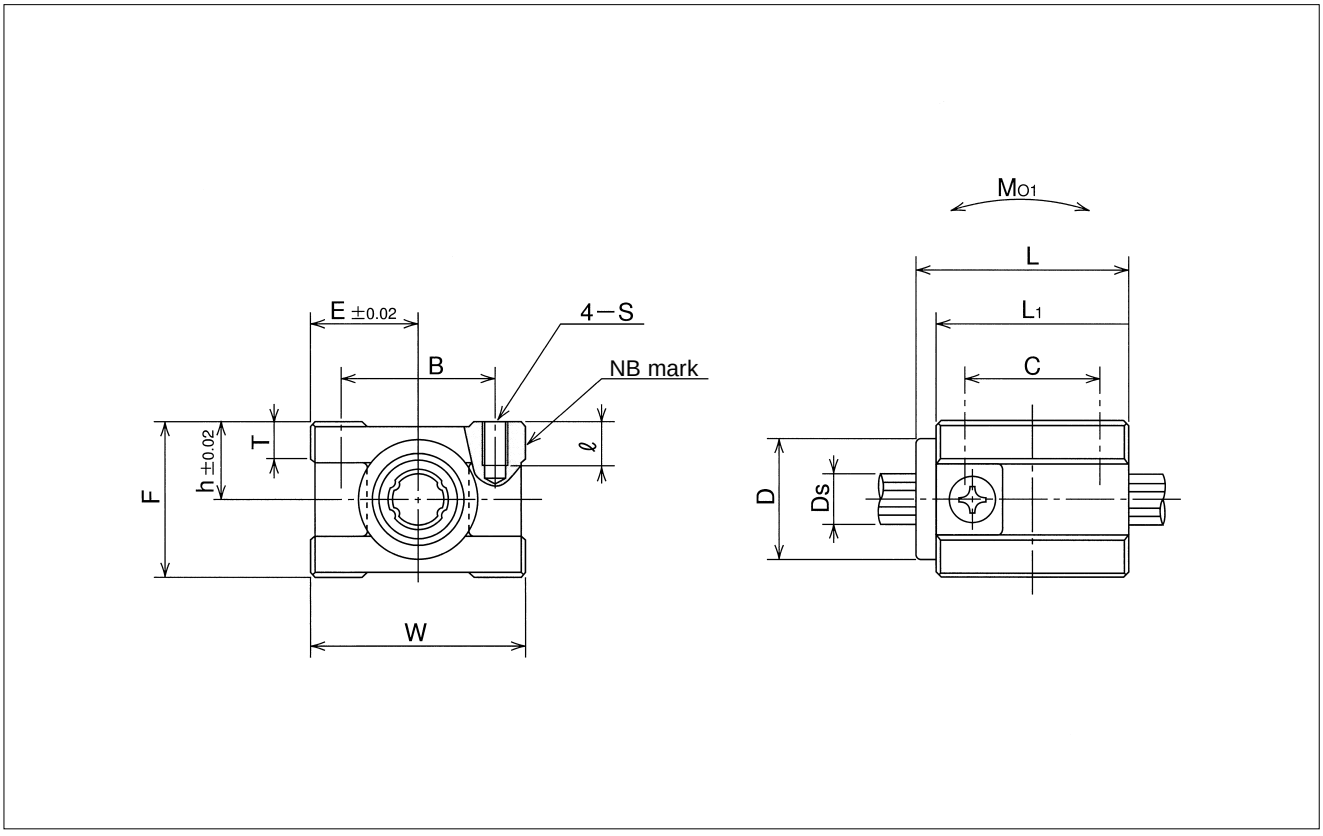

Ds		basic torque rating		basic load rating		allowable static moment		second cross-sectional moment of inertia	cross-sectional coefficient	mass		part number
		dynamic	static	dynamic	static					nut	shaft	
	tolerance	C_T	C_{OT}	C	Co	M_{01}	M_{02}					
mm	μm	N・m	N・m	kN	kN	N・m	N・m	mm^4	mm^3	kg	kg/m	
6	0/−12	1.5	2.4	1.22	2.28	5.1	40	59	19.7	0.035	0.21	**SPA 6**
8	0	2.1	3.7	1.45	2.87	7.4	50	190	47.6	0.042	0.38	**SPA 8**
10	−15	4.4	8.2	2.73	5.07	18	116	461	92.2	0.088	0.6	**SPA10**

1kN≒102kgf　1N・m≒0.102kgf・m

www.bergab.ru Берг АБ bergab@ya.ru Тел. (495)-228-06-21, факс (495) 223-3071

www.bergab.ru Берг АБ bergab@ya.ru Тел. (495)-228-06-21, факс (495) 223-3071

SPA-W TYPE

– Keyless Block Double Type –

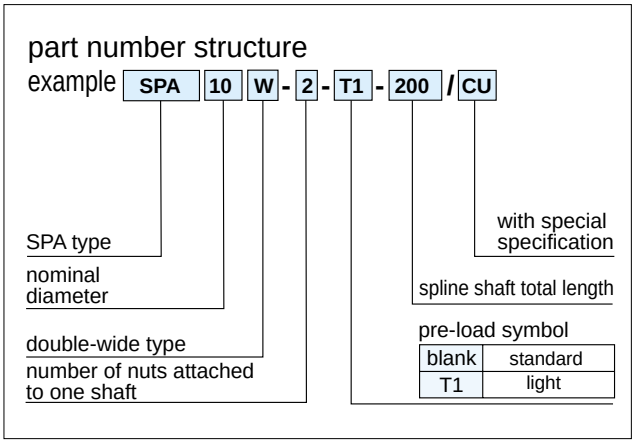

part number	major dimensions											
	h	E	W	L	F	L_1	T	Gw	B	C	S	ℓ
	mm	mm	mm	mm	mm	mm	mm	mm	mm	mm		mm
SPA 6W	9	12.5	25	50	18	45	4.2	6.5	18	35	M3	5
SPA 8W	10	14	28	50	20	44	5		20	34	M3	5
SPA10W	12.5	16.5	33	66	25	60	7.5		25	50	M4	6

www.bergab.ru Берг АБ bergab@ya.ru Тел. (495)-228-06-21, факс (495) 223-3071

www.bergab.ru Берг АБ bergab@ya.ru Тел. (495)-228-06-21, факс (495) 223-3071

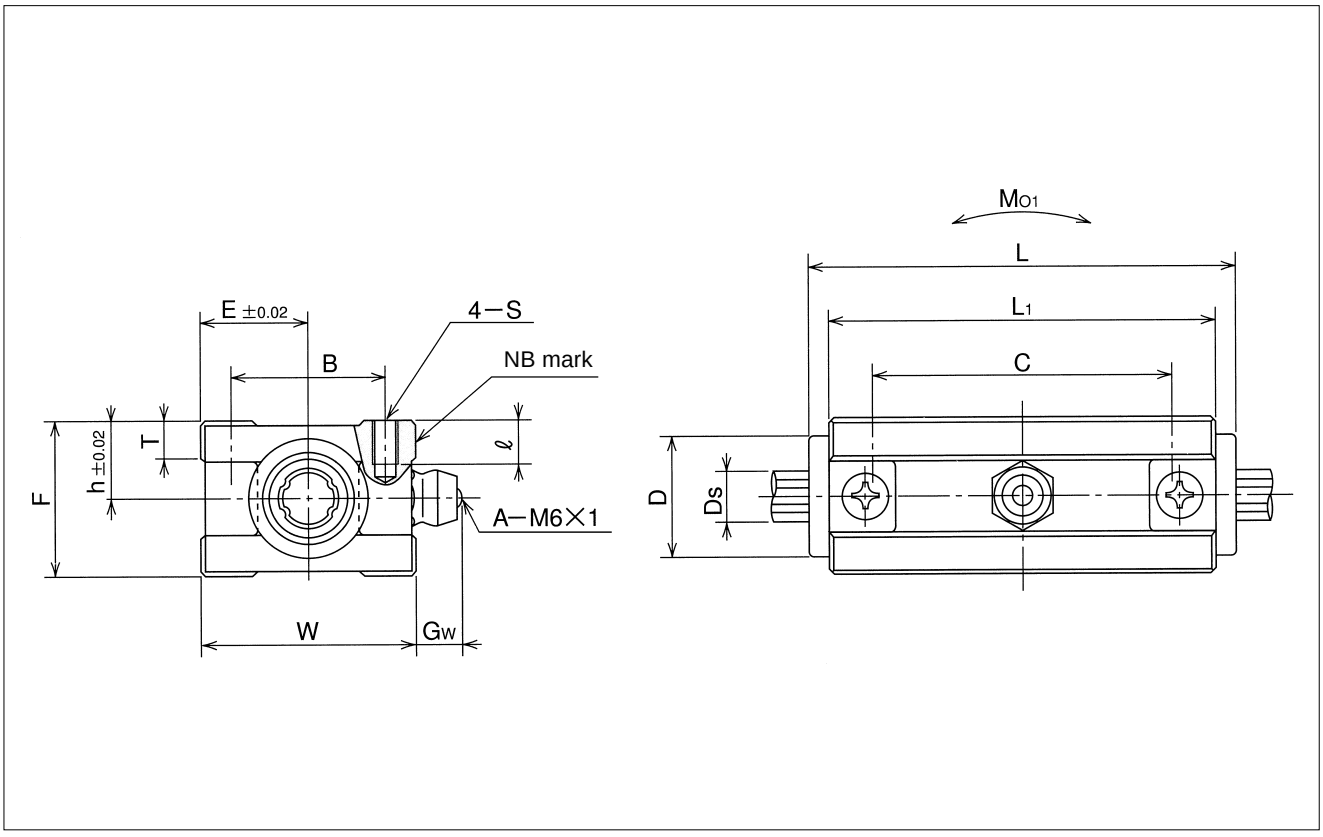

D	Ds		basic torque rating		basic load rating		allowable static moment	second cross-sectional moment of inertia	cross-sectional coefficient	mass		part number
		tolerance	dynamic	static	dynamic	static				nut	shaft	
mm	mm	μm	CT	COT	C	Co	Mo1			kg	kg/m	
			N・m	N・m	kN	kN	N・m	mm^4	mm^3			
14	6	0/−12	3.0	4.8	1.98	4.56	40	59	19.7	0.072	0.21	**SPA 6W**
16	8	0	4.2	7.4	2.35	5.78	50	190	47.6	0.085	0.38	**SPA 8W**
21	10	−15	8.8	16.4	4.42	10.14	116	461	92.2	0.179	0.60	**SPA10W**

1kN≒102kgf　1N・m≒0.102kgf・m

www.bergab.ru Берг АБ bergab@ya.ru Тел. (495)-228-06-21, факс (495) 223-3071

www.bergab.ru Берг АБ bergab@ya.ru Тел. (495)-228-06-21, факс (495) 223-3071

SSPB TYPE

– Block Type –

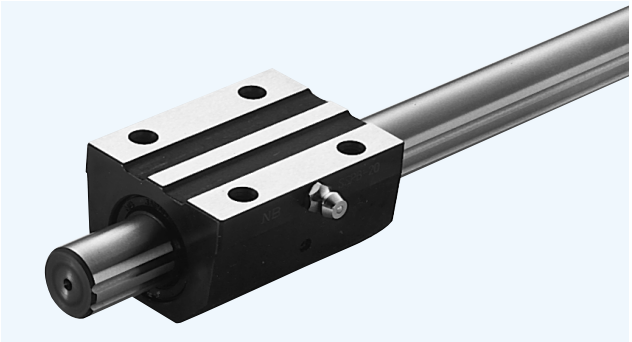

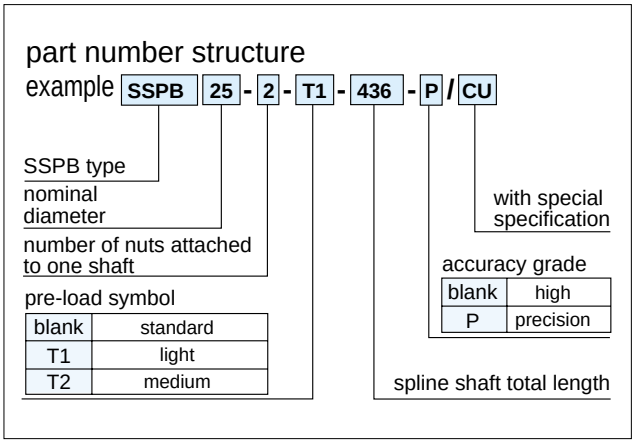

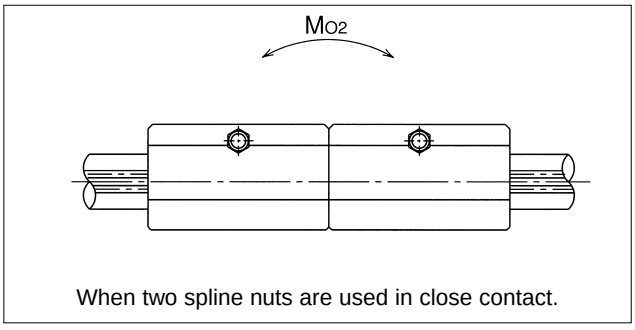

part number	major dimensions										
	h mm	B mm	L mm	E mm	b mm	T mm	P_1 mm	P_2 mm	S	ℓ mm	T_1 mm
SSPB20	19	48	60	24	35	8	35	35	M 6	12	5.5
SSPB25	22	60	70	30	41.5	10	40	40	M 8	12	6
SSPB30	26	70	80	35	50	12	50	50	M 8	12	7
SSPB40	32	86	100	43	63	15	60	60	M10	15	8

www.bergab.ru Берг АБ bergab@ya.ru Тел. (495)-228-06-21, факс (495) 223-3071

www.bergab.ru Берг АБ bergab@ya.ru Тел. (495)-228-06-21, факс (495) 223-3071

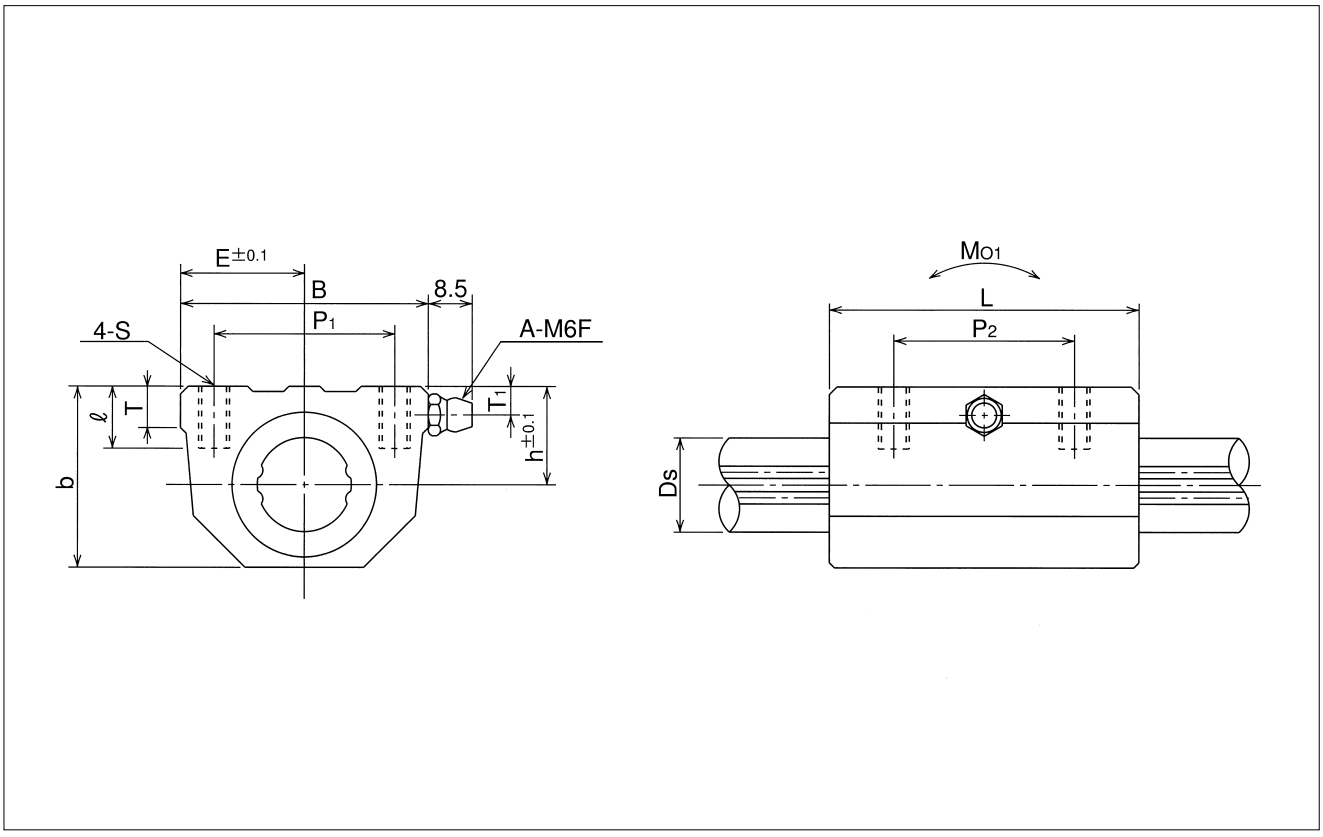

Ds mm	tolerance μm	basic torque rating dynamic C_T N・m	basic torque rating static C_{OT} N・m	basic load rating dynamic C kN	basic load rating static Co kN	allowable static moment M_{01} N・m	allowable static moment M_{02} N・m	second cross-sectional moment of inertia mm^4	cross-sectional coefficient mm^3	mass nut kg	mass shaft kg/m	part number
18.2	0 −21	83	133	7.84	11.3	63	500	5,050	554	0.55	2.0	**SSPB20**
23		162	239	12.3	16.1	104	830	12,700	1,110	0.9	3.1	**SSPB25**
28		289	412	18.6	23.2	181	1,470	27,500	1,960	1.4	4.8	**SSPB30**
37.4	0/−25	637	882	30.8	37.5	358	2,940	87,300	4,670	2.5	8.6	**SSPB40**

1kN≒102kgf　1N・m≒0.102kgf・m

www.bergab.ru Берг АБ bergab@ya.ru Тел. (495)-228-06-21, факс (495) 223-3071

www.bergab.ru Берг АБ bergab@ya.ru Тел. (495)-228-06-21, факс (495) 223-3071

STANDARD BALL SPLINE

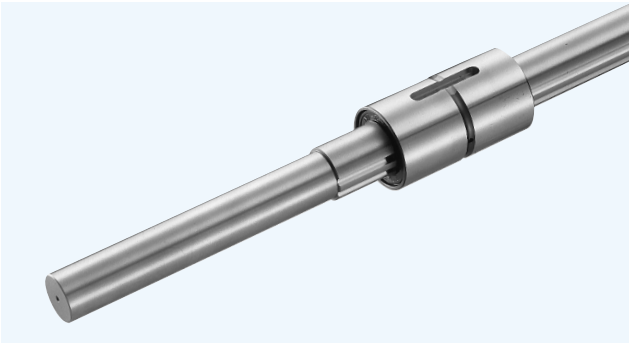

part number structure example

SPA 10 W S - 2 - T1 - 400

nut shape

SSP	cylindrical type
SSPM	key less type
SSPF	flange type
SSPT	two side cut flange type
SPA	aluminum block type
SSPB	block type

nominal diameter

double-wide type

standard spline shaft

number of nuts attached to one shaft

pre-load symbol

blank	standard
T1	light
T2	medium

standard length L

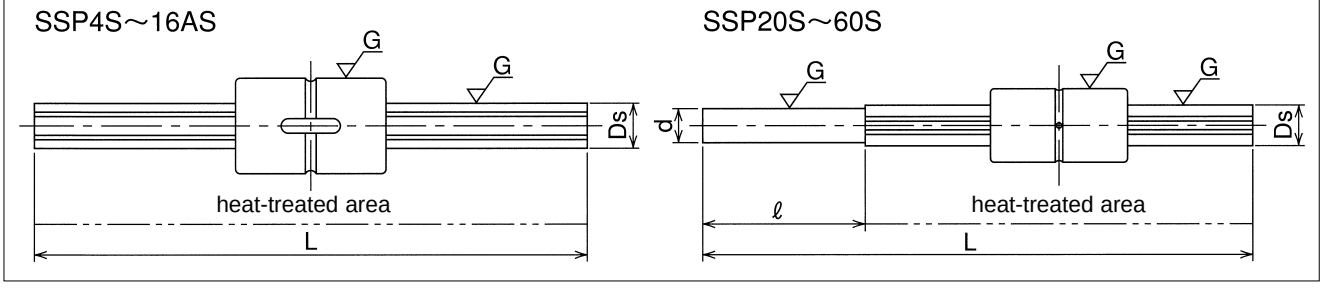

nominal diameter	major dimensions										applicable nut						
	Ds		d		ℓ	standard length L											
	mm	tolerance μm	mm	tolerance μm	mm	mm					SSP	SSPM	SSPF	SSPT	SPA	SPA-W	SSPB
4	4	0 −12	–	–	–	100	150	200	300	–	○	–	–	–	–	–	–
6	6		–	–	–	150	200	300	400	–	○	○	○	○	○	○	–
8	8	0 −15	–	–	–	150	200	300	400	500	○	○	○	○	○	○	–
10	10		–	–	–	200	300	400	500	600	○	○	○	○	○	○	–
13A	13	0 −18	–	–	–	200	300	400	500	600	○	–	○	–	–	–	–
16A	16		–	–	–	200	300	400	500	600	○	–	○	–	–	–	–
20	18.2	0 −21	15	0/−18	150	350	450	550	650	–	○	–	○	–	–	–	○
25	23		20	0 −21	150	350	450	550	650	850	○	–	○	–	–	–	○
30	28		25		150	450	550	650	750	1,150	○	–	○	–	–	–	○
40	37.4	0 −25	30		150	550	750	950	1,150	–	○	–	○	–	–	–	○
50	47		40	0 −25	150	650	850	1,150	1,350	–	○	–	○	–	–	–	–
60	56.5	0/−30	45		150	650	850	1,150	1,350	–	○	–	○	–	–	–	–

Tolerance for length L for nominal diameter sizes 4-16A: JIS B0405 coarse grade.

○ yes – no

Refer to dimension tables for nut shape and dimensions.

www.bergab.ru Берг АБ bergab@ya.ru Тел. (495)-228-06-21, факс (495) 223-3071

www.bergab.ru Берг АБ bergab@ya.ru Тел. (495)-228-06-21, факс (495) 223-3071

COMMERCIAL BALL SPLINE

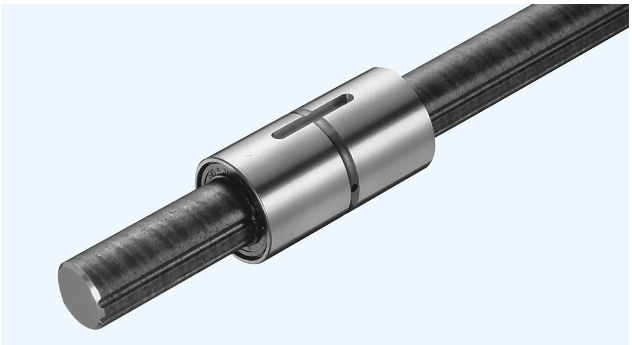

part number structure example

SSPF 25 C - 2 - 436 / CU

- nut shape: SSPF
- nominal diameter: 25
- commercial spline shaft: C
- number of nuts attached to one shaft: 2
- spline shaft total length: 436
- with special specification: CU

SSP	cylindrical type
SSPF	flange type
SSPB	block type

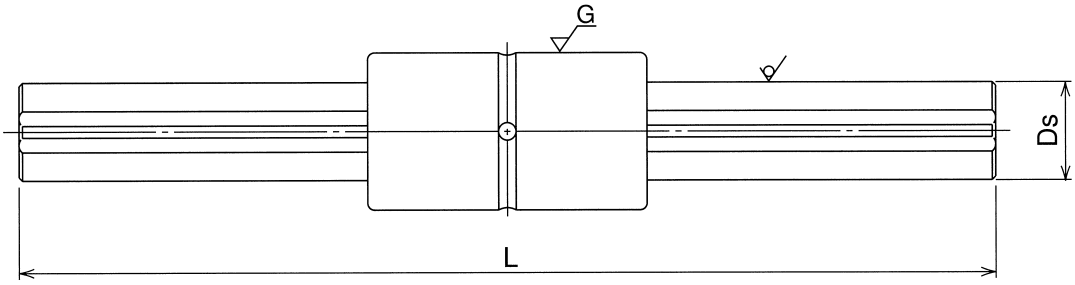

nominal diameter	major dimensions							applicable nut						
	Ds mm	standard length L mm						SSP	SSPM	SSPF	SSPT	SPA	SPA-W	SSPB
20	18.2	500	1,000	2,000	3,000	4,000	5,000	○	–	○	–	–	–	○
25	23	500	1,000	2,000	3,000	4,000	5,000	○	–	○	–	–	–	○
30	28	500	1,000	2,000	3,000	4,000	5,000	○	–	○	–	–	–	○
40	37.4	500	1,000	2,000	3,000	4,000	5,000	○	–	○	–	–	–	○
50	47	500	1,000	2,000	3,000	4,000	5,000	○	–	○	–	–	–	–

○ yes – no

- tolerance of total length and length of splined portion
  total length less than 4000: JIS B0405 coarse grade
  total length greater than 4,000: +/- 5.0mm
  Please specify for tolerances other than those above.
- Refer to dimensional tables for nut shape and dimensions
- When a commercial shaft is used, the rated load for the nut is about 70% that indicated in the dimensional tables.

www.bergab.ru Берг АБ bergab@ya.ru Тел. (495)-228-06-21, факс (495) 223-3071

www.bergab.ru Берг АБ bergab@ya.ru Тел. (495)-228-06-21, факс (495) 223-3071

ROTARY BALL SPLINE

The NB rotary ball spline can be used for both rotational motion and linear motion. It can be used in scalar robots, the vertical shaft of assembly equipment, and tool changers and loaders.

STRUCTURE AND ADVANTAGES

The NB rotary ball spline consists of a spline shaft and a nut. The nut has a spline portion and a rotating portion.

Reduced Number of Parts:

Because of the single-body construction consisting of the rotating portion which is equipped with cross roller elements and the spline portion, the number of parts is reduced and the cumulative installation error is reduced.

Compact and Light:

The cross roller is directly attached to the ball spline's external cylinder, resulting in a compact and light design.

Substantial Reduction in Installation Cost:

The use of cross roller elements keeps the housing thickness to a minimum, making the ball spline light and easy to install.

High Rigidity:

The cross roller elements and 4-row ball circuit structure provides high rigidity in spite of the compact design.

High Accuracy:

The cross roller elements ensure accurate positioning in the rotational direction.

Figure B-20 Structure of NB Rotary Ball Spline

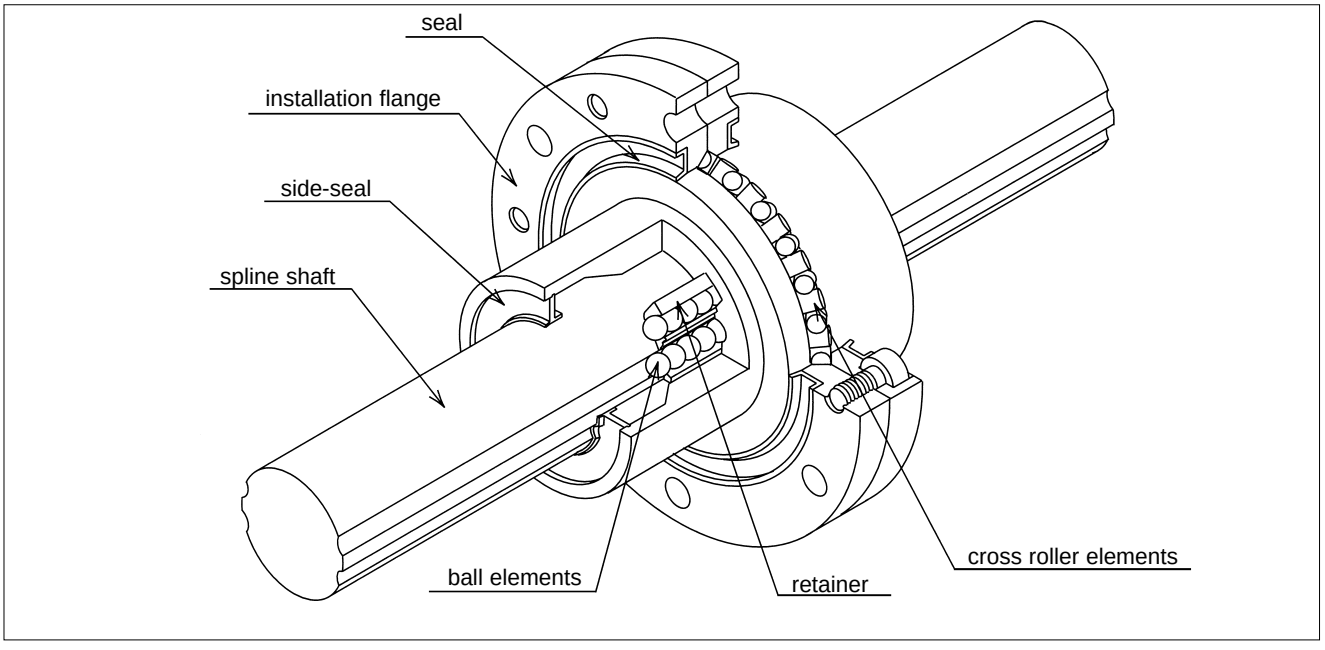

www.bergab.ru Берг АБ bergab@ya.ru Тел. (495)-228-06-21, факс (495) 223-3071

www.bergab.ru Берг АБ bergab@ya.ru Тел. (495)-228-06-21, факс (495) 223-3071

ACCURACY

The accuracy of the NB rotary ball spline is measured as shown in figure 2.

Figure B-21 Accuracy Measurement Points

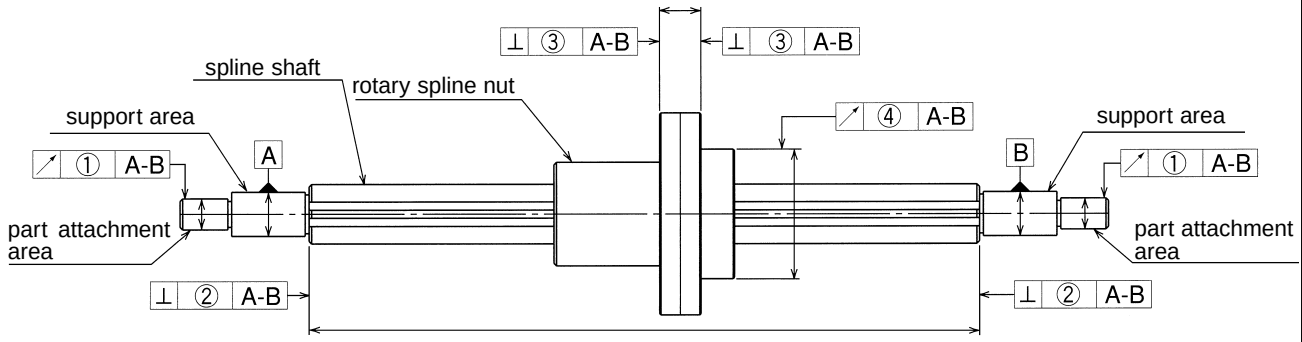

Note: The support area is the portion that supports the shaft using, for example, a bearing.
The part attachment area is the portion to which other parts, such as gears, are attached.

Table B-15 Tolerance of Spline Shaft Groove Torsion (Max)

accuracy grade	high
tolerance	13μm/100mm

The groove torsion is indicated for 100mm, arbitrarily set as the effective length of the spline section. When the movement rate is under 100mm or exceeds 100mm, the value shown in the table 1 increases or decreases proportionally to the movement rate.

Table B-16 Tolerance of Parts Relative to Spline Support Area unit/μm

part number	①radial run out of part attachment area	②perpendicularity of the end of the spline shaft section	③perpendicularly of the flange
SPR 6	14	9	14
SPR 8			
SPR10	17		
SPR13	19	11	18
SPR16			
SPR20			
SPR25	22	13	21
SPR30			
SPR40	25	16	25
SPR50			
SPR60	29	19	29

Table B-17 ④Radial Run Out of Outer Surface of Rotary Spline Nut Relative to Spline Support Area unit/μm

spline shaft total length		part number					
greater than	or less	SPR6,8	SPR10	SPR13,16	SPR20,25,30	SPR40,50	SPR60
	200	46	36	34	32	32	30
200	315	89	54	45	39	36	34
315	400	126	68	53	44	39	36
400	500	163*	82	62	50	43	38
500	630	–	102	75	57	47	41
630	800	–	–	–	68	54	45
800	1,000	–	–	–	83	63	51
1,000	1,250	–	–	–	102	76	59
1,250	1,600	–	–	–	130	93	70
1,600	2,000	–	–	–	171	118	86

※Contact NB for spline shafts exceeding 2000mm.
SPR6 spline shaft wax. length : 400mm

www.bergab.ru Берг АБ bergab@ya.ru Тел. (495)-228-06-21, факс (495) 223-3071

www.bergab.ru Берг АБ bergab@ya.ru Тел. (495)-228-06-21, факс (495) 223-3071

PRE-LOAD AND CLEARANCE IN ROTATIONAL DIRECTION

The amount of clearance and pre-load for the spline portion and the cross-roller portion are expressed in terms of the clearance in the rotational direction and the clearance in the radial direction, respectively. Three levels of pre-load are available: standard, light (T1), and medium (T2).

Table B-18 Pre-Load and Clearance in Rotational Direction unit/μm

	part number	standard	light (T1)	medium (T2)
linear motion	SPR 6	−2～+1	−6～−2	−
	SPR 8			
	SPR10	−3～+1	−8～−3	
	SPR13			−13～−8
	SPR16			
	SPR20	−4～+2	−12～−4	−20～−12
	SPR25			
	SPR30			
	SPR40	−6～+3	−18～−6	−30～−18
	SPR50			
	SPR60			
rotational motion	SPR 6 ～ SPR60	±5		

Table B-19 Operating Condition and Pre-Load

pre-load	symbol	operating condition
standard	blank	Minute vibration is applied. A precise motion is required. Moment is applied in a given direction.
light	T1	Light vibration is applied. Light torsional load is applied. Cyclic torque is applied.
medium	T2	Shock/vibration is applied. Over-hang load is applied. Torsional load is applied.

SPECIAL REQUIREMENTS

NB will fabricate special shaft ends, spline nuts, spline shafts, surface finish etc. to meet customer requirements. Contact NB for details.

Figure B-22 Examples of Shaft End Machining

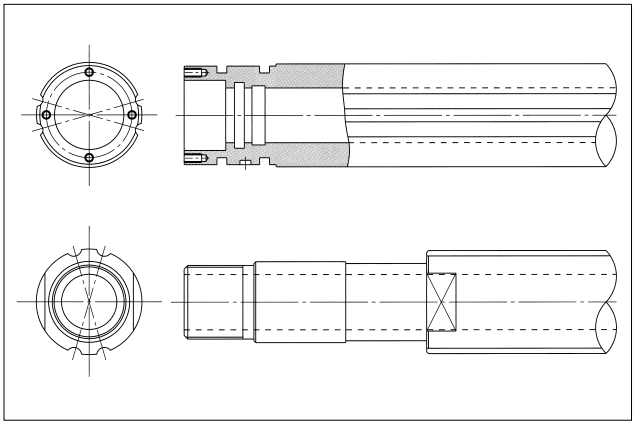

Table B-20 recommended hollow shaft

part number	outer dia. mm	inner dia. mm	modulus of section mm^3	giometrical moment of inertia mm^4
SPR 6	6	2	19.4	58
SPR 8	8	3	46.5	186
SPR10	10	4	89.6	448
SPR13	13	6	193	1,260
SPR16	16	8	348	2,780

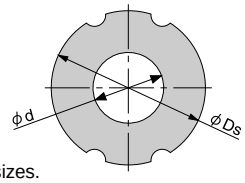

Contact NB for other sizes.

www.bergab.ru Берг АБ bergab@ya.ru Тел. (495)-228-06-21, факс (495) 223-3071

www.bergab.ru Берг АБ bergab@ya.ru Тел. (495)-228-06-21, факс (495) 223-3071

MOUNTING OF ROTARY BALL SPLINE

The flange attachment bolts have been pre-adjusted for smooth rotary movement and should never be loosened. Shock loading to the flange assembly should be avoided as this can degrade the accuracy of movement and deteriorate the overall performance.

Mounting:

When the flange is to be used with a faucet joint (as shown in Figure 4) the housing bore should be machined to a tolerance of H7 and to a minimum depth of 60% of the flange thickness. If only a light load is applied to the SPR in operation, the flange can be used without a pilot end.
When the mounting bolts are applied, they should be tightened diagonally in steps with progressively more torque at each step. A torque wrench should be used to achieve uniform torque. The recommended torque values for medium-hardness steel bolts are listed in Table 7.

Insertion of Spline Shaft:

When inserting the rotary ball spline shaft into the spline nut, ensure that the ball elements do not drop out. This is accomplished by aligning the raceway grooves of the shaft with the rows of ball elements in the nut. Then simply insert the spline shaft through the spline nut.

Figure B-23 Flange mounting Method

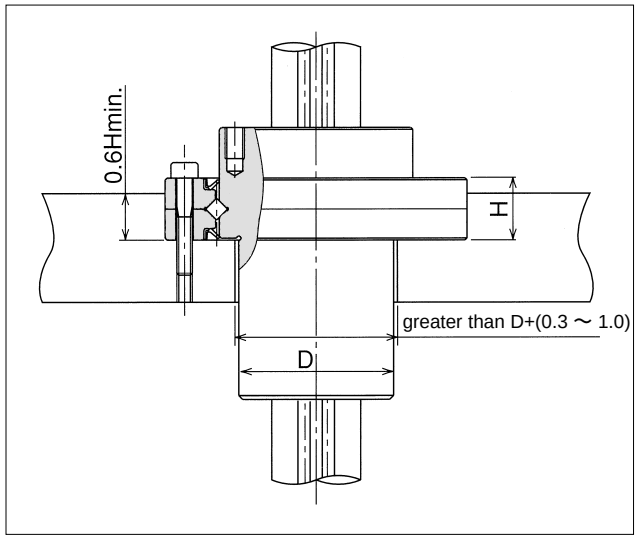

Table B-21 Recommended Torque

part number	installation bolt	recommended torque N・m
SPR 6	M2	0.6
SPR 8	M2.5	0.8
SPR10,13	M3	2.0
SPR16,20,25	M4	3.9
SPR30	M6	12.7
SPR40,50,60	M8	29.4

LUBRICATION

Since NB rotary ball splines are equipped with seals at both the spline portion and the rotational portion, the lubricant is retained for an extended period of time. Lithium soap grease is applied prior to shipment, so they can be used immediately without having to apply lubricant. Lubricant should be added periodically and depending on the operating conditions.

A grease fitting can be installed as an optional feature for sizes 20 to 60, however, an oil lubricant should be used for high-speed applications. Contact NB for further details.

Figure B-24 Example of Installed Grease Fitting (SPR 20~60)

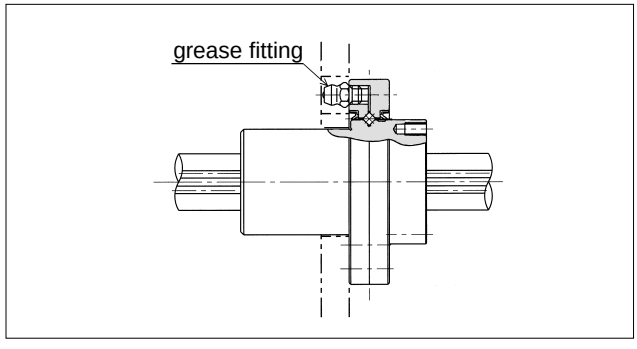

www.bergab.ru Берг АБ bergab@ya.ru Тел. (495)-228-06-21, факс (495) 223-3071

www.bergab.ru Берг АБ bergab@ya.ru Тел. (495)-228-06-21, факс (495) 223-3071

OPERATING ENVIRONMENT

Certain operating environments may prevent the full functionality of the rotary ball spline from being achieved. The operating environment should be taken into consideration when designing the system.

Operating Temperature:

Resin retainers are used in the rotary ball spline, so the operating temperature should never exceed 80℃.

Dust Prevention:

The invasion of foreign particles and dust may affect the motion characteristics of the rotary ball spline and shorten the travel life. Seals will perform well under normal operating conditions, but may not completely prevent the entry of dust in a hostile environment. When used in such environments, a dust prevention mechanism such as bellows or a cover should be used to protect the rotary ball spline.

APPLICATION EXAMPLES

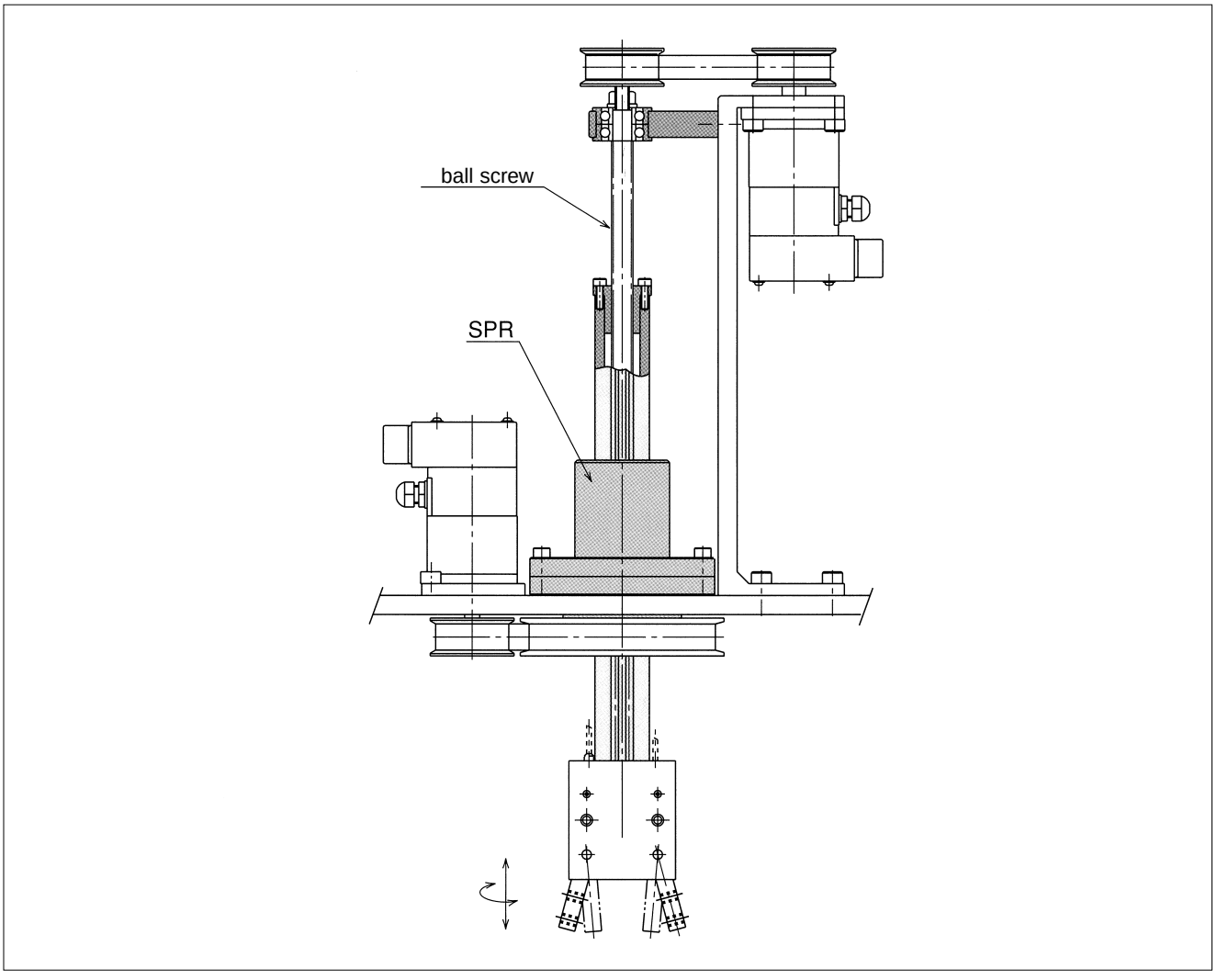

www.bergab.ru Берг АБ bergab@ya.ru Тел. (495)-228-06-21, факс (495) 223-3071

www.bergab.ru Берг АБ bergab@ya.ru Тел. (495)-228-06-21, факс (495) 223-3071

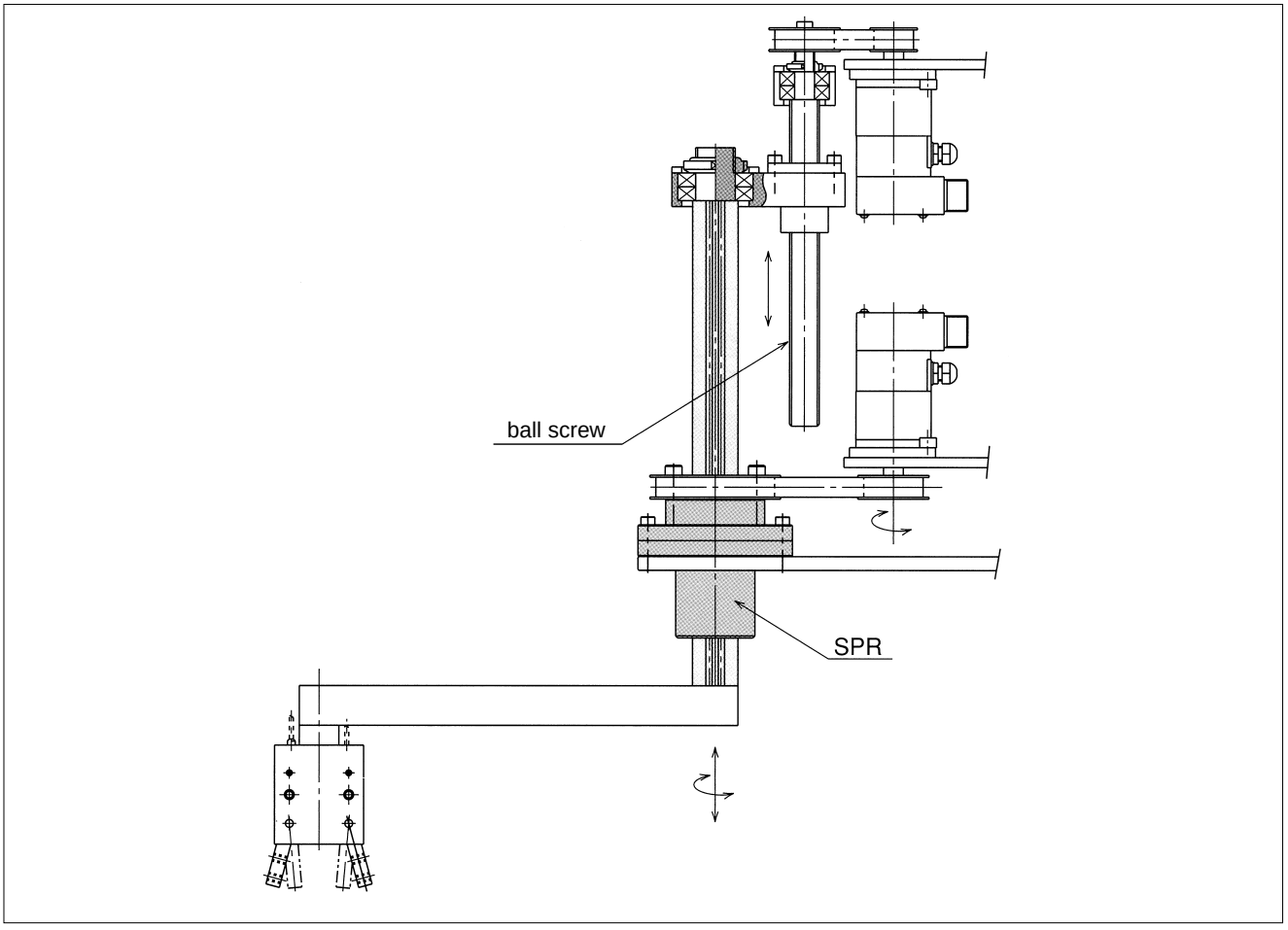

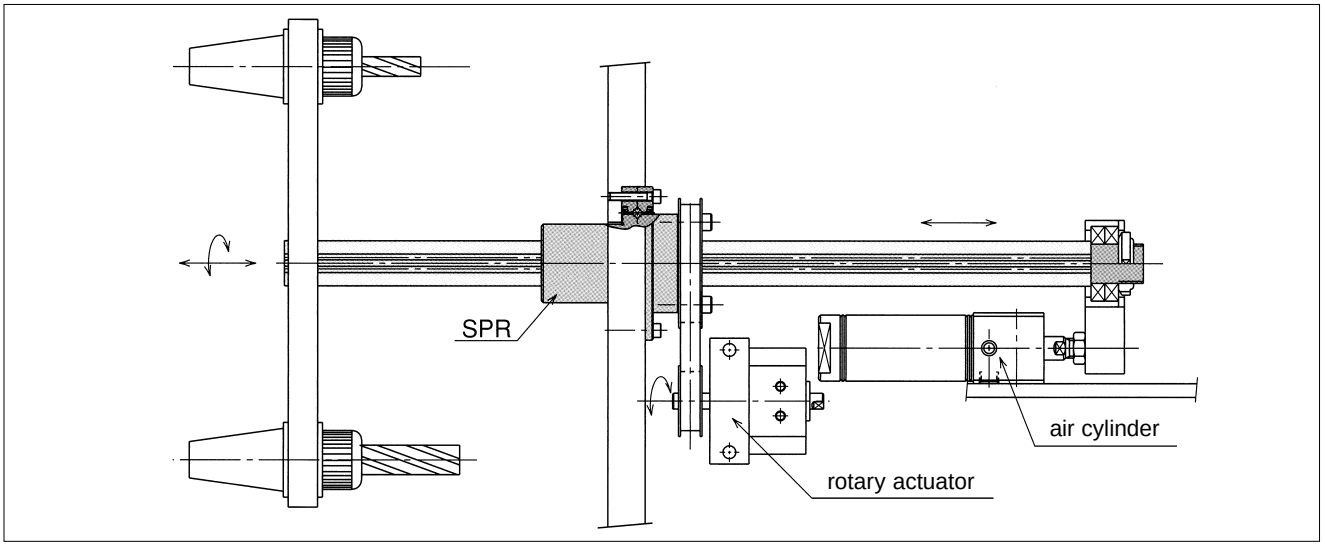

www.bergab.ru Берг АБ bergab@ya.ru Тел. (495)-228-06-21, факс (495) 223-3071

www.bergab.ru Берг АБ bergab@ya.ru Тел. (495)-228-06-21, факс (495) 223-3071

SPR TYPE

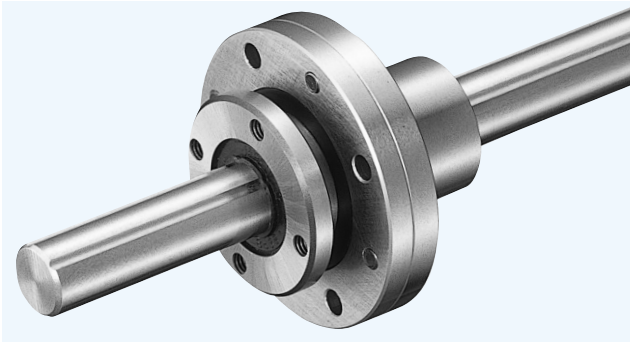

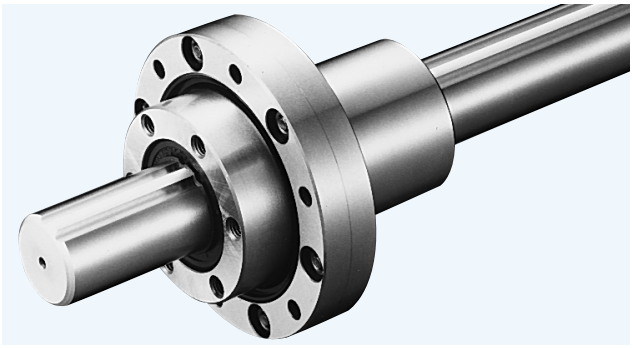

part number structure example

SPR | 25 - 2 - T1 - 436 / CU

- SPR: SPR type
- 25: nominal diameter
- 2: number of nuts attached to one shaft
- T1: pre-load symbol
- 436: spline shaft total length
- CU: with special specification

pre-load symbol	
blank	standard
T1	light
T2	medium

part number	ball spline major dimensions								major dimensions of support bearing							
	D_1		D_2	L		P_1	S	h	l	H	D_3		P_2	d	G	θ°
		tolerance			tolerance							tolerance				
	mm	μm	mm	mm	mm	mm		mm	mm	mm	mm	μm	mm			mm
SPR 6	20	0 −21	13	25	0 −0.2	16	M2	2.5	5	6.5	30	0/−21	24	2.4	φ2	20°
SPR 8	22		15	25		18	M2.5	3	6	6.5	33	0 −25	27	2.9		
SPR10	27		19	33		22	M3	4	8	7	40		33	3.4		
SPR13	29		24	36		24	M3	5	8	9	50		42	3.4	φ3	15°
SPR16	36	0 −25	31	50		30	M4	6	10	11	60	0 −30	50	4.5		
SPR20	40		34	60		34	M4	7	12	13	66		56	4.5	M6×0.75	15°
SPR25	50		40	70	0 −0.3	42	M5	8	13	16	78		68	4.5		
SPR30	61	0 −30	47	80		52	M6	10	17	17	100	0 −35	86	6.6		
SPR40	76		62	100		64	M6	10	23	20	120		104	9		
SPR50	88	0 −35	75	112		77	M8	13	24	22	130	0 −40	114	9		
SPR60	102		90	127		90	M8	13	25	25	150		132	9		

www.bergab.ru Берг АБ bergab@ya.ru Тел. (495)-228-06-21, факс (495) 223-3071

www.bergab.ru Берг АБ bergab@ya.ru Тел. (495)-228-06-21, факс (495) 223-3071

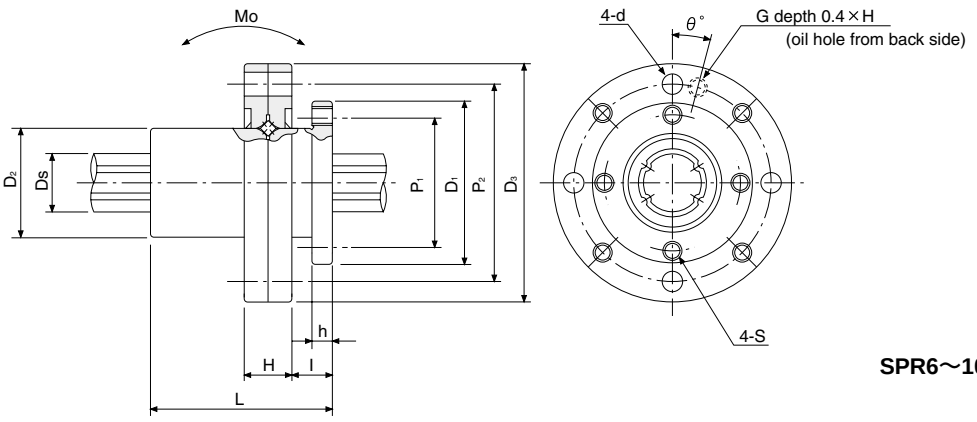

SPR6～10

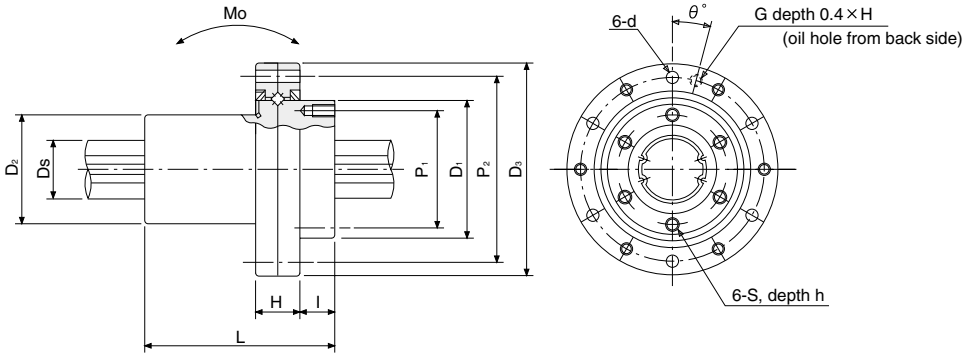

SPR13～60

spline shaft		ball spline				support bearing		allowable static moment	second cross-sectional moment of inertia	cross-sectional coefficient	mass		※maximum rotational speed	part number
Ds		basic torque rating		basic load rating		basic load rating					nut	spline shaft		
	tolerance	dynamic	static	dynamic	static	dynamic	static							
		C_T	C_{OT}	C	Co	C_R	C_{OR}	Mo						
mm	μm	N・m	N・m	kN	kN	kN	kN	N・m	mm^4	mm^3	kg	kg/m	rpm	
6	0/−12	1.5	2.4	1.22	2.28	0.6	0.5	5.1	59	19.7	0.04	0.21	3,500	**SPR 6**
8	0 −15	2.1	3.7	1.45	2.87	1.2	1.14	7.4	190	47.6	0.05	0.38	3,500	**SPR 8**
10		4.4	8.2	2.73	5.07	2.4	2.45	18.0	461	92.2	0.09	0.60	3,000	**SPR10**
13	0 −18	21	39.2	2.67	4.89	3.0	3.70	13.7	1,380	213	0.17	1.0	1,800	**SPR13**
16		60	110	6.12	11.2	5.6	6.70	46	2,980	373	0.33	1.5	1,500	**SPR16**
18.2	0 −21	83	133	7.84	11.3	5.90	7.35	63	5,050	554	0.45	2.0	1,200	**SPR20**
23		162	239	12.3	16.1	9.11	11.5	104	12,700	1,110	0.75	3.1	1,000	**SPR25**
28		289	412	18.6	23.2	13.2	18.0	181	27,500	1,960	1.25	4.8	800	**SPR30**
37.4	0 −25	637	882	30.8	37.5	22.8	32.3	358	87,300	4,670	2.30	8.6	800	**SPR40**
47		1,390	3,180	46.1	74.2	27.2	42.1	696	216,000	9,210	3.10	13.1	570	**SPR50**
56.5	0/−30	2,100	4,800	58.0	127.4	30.0	48.2	1,300	451,000	16,000	4.70	19	500	**SPR60**

※Maximum rotational speed for grease lubrication.

1kN≒102kgf　1N・m≒0.102kgf・m

Contact NB for further information when higher speeds or oil lubrication is required.

www.bergab.ru Берг АБ bergab@ya.ru Тел. (495)-228-06-21, факс (495) 223-3071