6 Reeler

Reeler

Most large paper machines produce a continuous paper web which is 8–10 metres wide. Such a wide and long web has to be cut and made into smaller rolls before distribution to the customers. The first reeling, or spool, is done in the reeler at the end of the paper machine.

When the roll of paper on the reel reaches the desired diameter, reeling is continued on a new spool (→ **fig 1**). The jumbo roll of paper is transferred to the slitter and rewinder where it is cut and rewound into rolls of the size required by the customer.

Rolls in modern machines weigh up to 100 tonnes.

Fig. 1

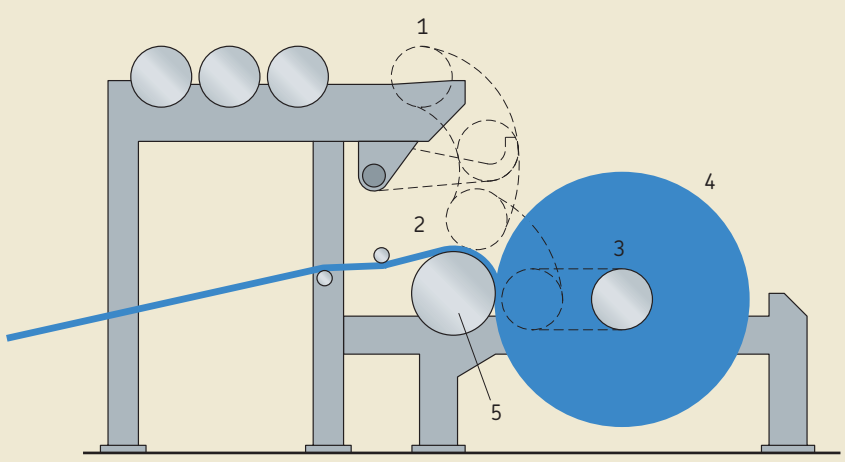

Reeler
1 *Reel spool storage*
2 *Web turn-up to empty spool*
3 *Reeling position*
4 *Jumbo roll*
5 *Reel drum*

Bearing arrangements

The reeler bearings work in a relatively good environment. The surroundings are dry and the temperature is around 25 °C. However, it is important for the bearings to be protected from paper dust.

Reel drums

Reel drums are normally carried by spherical roller bearings and CARB toroidal roller bearings mounted on adapter sleeves or directly on tapered journals.

A bearing arrangement for a reel drum is shown in **fig. 2**. If an adapter sleeve (with abutment spacer) has been incorporated in the design, it is recommended that an annular groove be machined in the journal outside the sleeve position. This groove can then be used to take a backing ring when a hydraulic nut (HMV) is used to dismount the bearing.

Bearing types

SKF recommends spherical roller bearings of series 231 and 240 as well as CARB toroidal roller bearings of series C 31. Normal radial internal clearance is recommended.

Selection of bearing size

The bearing selection must always be based on proper calculations. The recommended L_{10h} and L_{10ah} lives are 120 000 hours.

Lubrication

Slow running machines can be grease lubricated, but bearings in this particular application are mostly lubricated by a circulating oil system. For spherical roller bearings, the oil is supplied via the groove and holes in the outer ring of the bearing. An annular groove turned in the housing to coincide with the holes improves lubrication. For CARB toroidal roller bearings, the oil is supplied from the side.

For further information, see *Chapter 7*, *Lubrication*, **pages 8–16** and *examples 36* and *37* in *chapter 8*, *Lubrication examples*, **pages 72–75**.

Journal and housing tolerances for reel drums

Journal	Mounting on a sleeve	h9 (IT5/2)
	Mounting on a tapered journal, see *chapter 1*, **pages 14–16**	
Housing		G7

See also *chapter 1*, *General requirements and recommendations*, *Tolerances*, **pages 14–16**

Reel drum bearing arrangement

Fig. 2

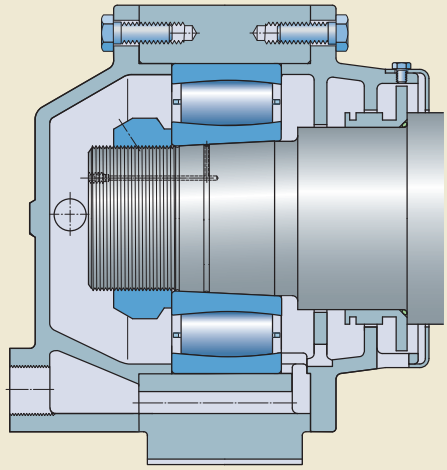

Reel spools

Reel spools are generally carried by two spherical roller bearings per journal – one mounted on a withdrawal sleeve, the other mounted directly on a cylindrical journal seating.

The bearing housings (→ **fig 3**) are usually cylindrical and are designed to fit both in the reeler and the winder where the slitting takes place. A lubrication duct should be provided in each housing to facilitate lubrication of the bearings.

Bearing types

SKF recommends spherical roller bearings of series 230 and 231. Normal radial internal clearance is recommended.

Selection of bearing size

During the reeling of the paper in the machine and the re-reeling from the reel spool, the paper speed is constant and the rotational speed of the reel spool varies. In order to calculate the bearing life, the equivalent speed and load have to be determined. The recommended L_{10h} and L_{10ah} lives are 120 000 hours.

The constant mean rotational speed n_m which, when multiplied by the reeling time, will give the same number of revolutions as, can be taken from **diagram 1**, **page 4**. n_m in relation to maximum speed n_0 is shown as a function of d_e/d_0, where d_e is the maximum external diameter of the reeled paper and d_0 the reel spool diameter.

Journal and housing tolerances for reel drums

Journal	Mounting on a sleeve	h9 (IT5/2)
	Mounting on a cylindrical seating	
	(100) to 140 mm	n6
	(140) to 280 mm	p6
Housing		G7

See also *chapter 1*, *General requirements and recommendations*, *Tolerances*, **pages 14–16**

A constant mean load, acting on the journal bearing arrangement and equivalent to the real load, can be calculated with the aid of

$$K_m = f_m m_0$$

where

K_m = constant mean load, acting on the journal bearing arrangement, N
f_m = factor for calculating constant mean journal load, N/kg, (→ **diagram 2**, **page 4**)
m_e = mass of reeled paper, kg
m_0 = mass of reel spool, kg
d_e = maximum external diameter of reel, m
d_0 = diameter of reel spool, m
n_m = constant mean rotational speed, r/min
n_0 = maximum rotational speed, r/min

The diagrams and the equation are valid for reeling as well as re-reeling.

The reel spool has two bearings per journal (→ **fig. 3**) and the housing often rests in

Reel spool bearing arrangement

Fig. 3

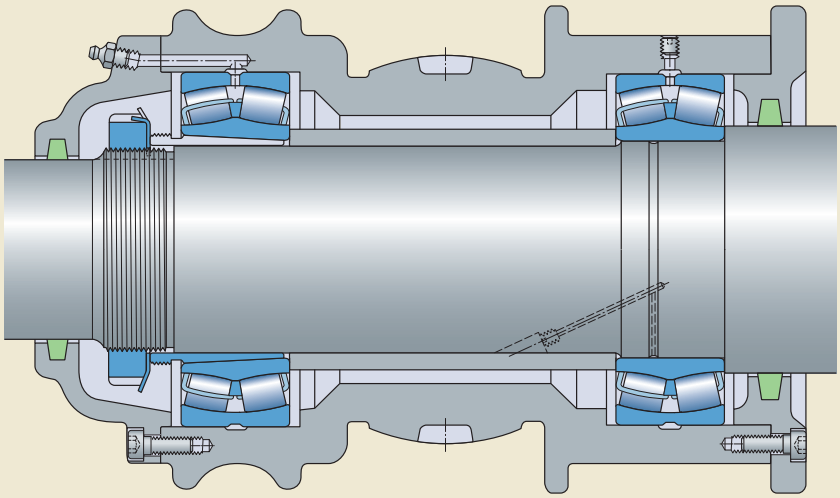

different ways when reeling and re-reeling. When reeling, for example, one bearing may take the full load, whereas the load is shared equally between the two bearings during re-reeling.

The re-reeling speed is normally much higher, but of course the total number of revolutions is the same for the two operations. If the bearing load is different, two values, F_{m1} and F_{m2}, are calculated and then a total constant mean bearing load can be calculated using

$$F_m = \sqrt[3]{\frac{F_{m1}^3 + F_{m2}^3}{2}}$$

With $P = F_m$ the total life in number of revolutions L_{10} can be calculated with the aid of the life equation. Since half of these revolutions are for reeling and half for re-reeling, the L_{10h} life in hours should be calculated for each operation; the total L_{10h} life will then be

$$L_{10h} = \frac{(L_{10h1} + L_{10h2})}{2}$$

For reeling

$$L_{10h1} = \frac{1\,000\,000}{60\,n_{m1}} \left(\frac{C}{P}\right)^{10/3}$$

or re-reeling

$$L_{10h2} = \frac{1\,000\,000}{60\,n_{m2}} \left(\frac{C}{P}\right)^{10/3}$$

where

L_{10h} = basic rating life, operating hours
n_{m1} = rotational speed for reeling, r/min
n_{m2} = rotational speed for re-reeling, r/min
C = basic dynamic load rating, N
P = equivalent dynamic bearing load, N

n_{m1} and n_{m2} are calculated with the help of **diagram 1**.

The required value L_{10h} is estimated in relation to the number of reel spools available. The bearings are generally oversized.

Diagram for determining the constant mean rotational speed

Diagram 1

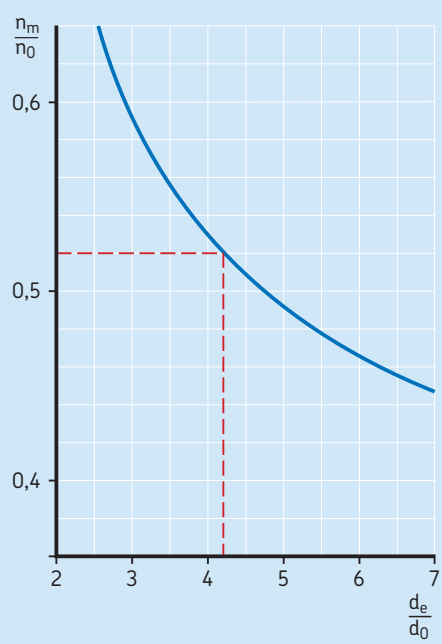

Diagram for determining factor for calculation of constant mean journal load

Diagram 2

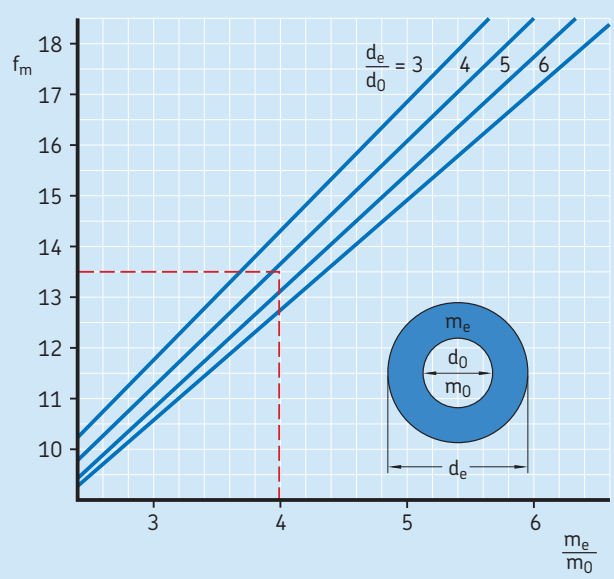

Example

A reel spool with a bearing arrangement according to **fig 3**, **page 3**, has d_0 = 0,65 m and a mass of 4 200 kg. Maximum paper mass 16 800 kg and then d_e = 2,7 m. Paper speed in the machine is 600 m/min, which means 294 r/min maximum and 71 r/min minimum rotational speed. The support in the machine is such that one bearing at each side takes up the entire load when reeling. During re-reeling, the paper speed is 2 000 m/min with maximum 980 r/min and minimum 236 r/min rotational speed, and then all four bearings share the load equally. What bearing life can be expected for the most heavily loaded bearing?

SKF Explorer spherical roller bearings 23030 CC(K)/W33, with a basic dynamic load rating C = 510 000 N, are selected.

$$\frac{m_e}{m_0} = \frac{16\,800}{4\,200} = 4$$

$$\frac{d_e}{d_0} = \frac{2{,}7}{0{,}65} = 4{,}2$$

According to **diagram 2** f_m = 13,5.

a. When reeling, the maximum bearing load is the same as the journal load

$$F_{m1} = K_m = f_m\, m_0 = 13{,}5 \times 4\,200$$

$$= 56\,700 \text{ N}$$

b. When re-reeling, the journal load is shared equally by the two bearings

$$F_{m2} = \frac{Km}{2} = \frac{56\,700}{2} = 28\,350 \text{ N}$$

The constant mean load is

$$F_m = \sqrt[3]{\frac{56\,700^3 + 28\,350^3}{2}} = 46\,800 \text{ N}$$

Since P = F_m

$$L_{10} = \left(\frac{510\,000}{46\,800}\right)^{10/3}$$

= 2 868 million revolutions

c. When reeling n_0 = 294 r/min and with **diagram 1**

$$n_{m1} = 0{,}52 \times 294 = 153 \text{ r/min}$$

$$L_{10h1} = \frac{1\,000\,000}{60 \times 153} \times 2\,868 = 312\,400 \text{ h}$$

d. When re-reeling n_0 = 980 r/min

$$n_{m2} = 0{,}52 \times 980 = 510 \text{ r/min}$$

$$L_{10h2} = \frac{1\,000\,000}{60 \times 510} \times 2\,868 = 93\,700 \text{ h}$$

The total basic rating life L_{10h} is thus 1/2 (312 400 + 93 700) = 203 050 h for a complete operating cycle, which is more than enough. The total operating time for one roll of paper is in this case timed as 83,33 + 25,55 = 108,88 min. This corresponds during the basic rating life period to

$$\frac{203\,050 \times 60}{109} = 111\,770 \text{ reels of paper}$$

Lubrication

The bearing arrangements for reel spools are usually lubricated with the same grease as that used for the forming and press section. Relubrication should be carried out about once a month.

For further information, see *Chapter 7*, *Lubrication*, **pages 8–16**.