8 Lubrication examples

Breast, forming and forward drive rolls 2

Wire roll 6

Suction roll 10

Felt roll 14

Press roll 18

Felt roll 24

Drying cylinder 28

Yankee cylinder 42

Paper guide roll. 58

Calender roll 62

Reel drum 72

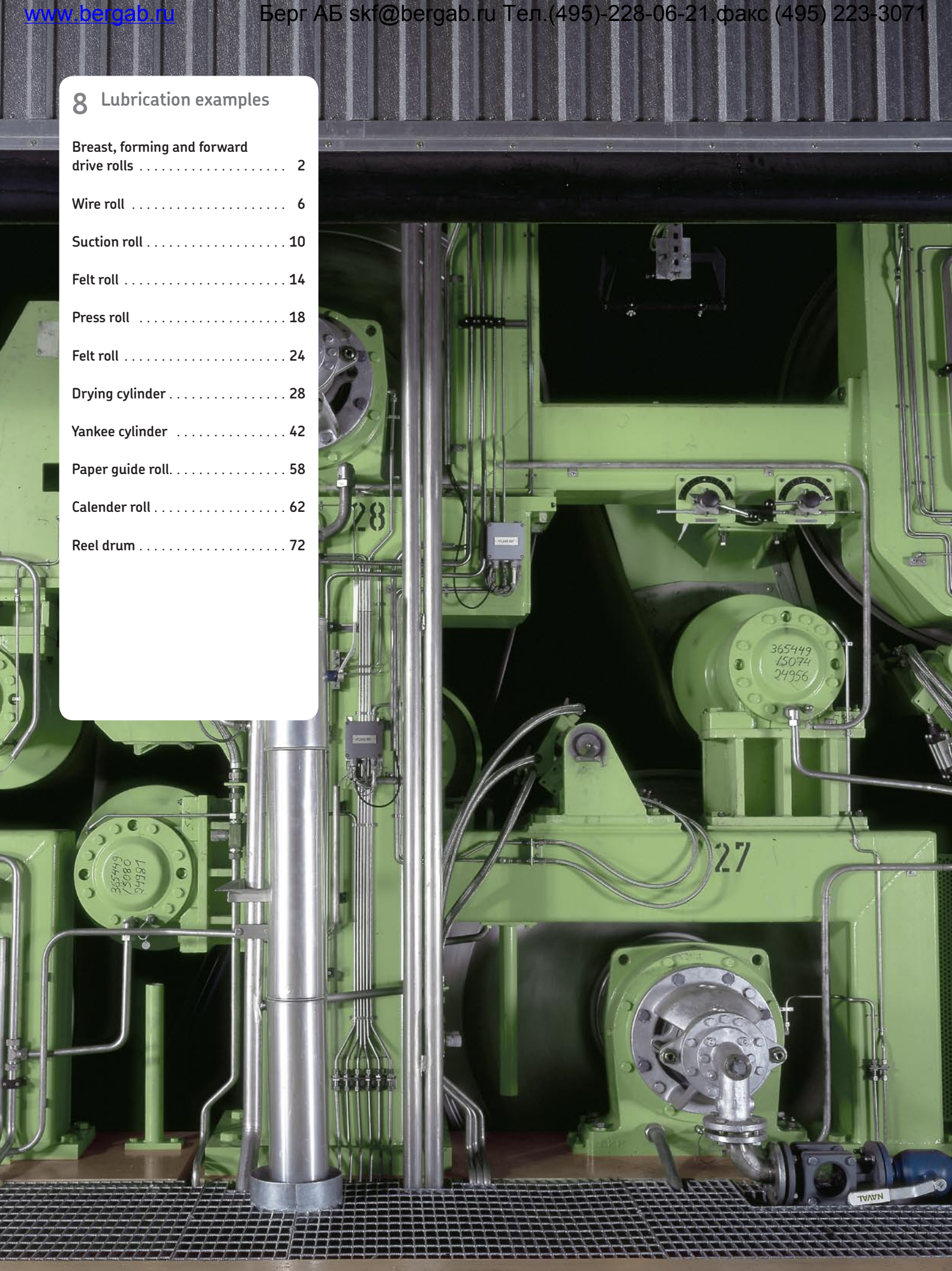

Lubrication examples

The following examples closely represent the bearing positions referred to in the applications described in this handbook. These examples are to be used as general guidelines only and are valid only when the bearing application and operating conditions are the same as to those shown in this chapter.

Example 1

Breast, forming and forward drive rolls (grease)

Lubrication guidelines

SKF's experience is that a grease with a base oil viscosity of minimum 175 mm²/s provides good lubrication performance in this position. Rust protection and sealing properties have the highest priority in the forming section.

General guidelines, as outlined in *Chapter 7*, *Lubrication*, *Grease lubrication* (→ **pages 8–12**), should also be taken into account.

Comments on the diagram

Bearing temperature depends on the bearing speed, applied load and external cooling or heating of the bearing arrangement. Heat transfer from the housing, shaft and the foundation is largely dependent on the bearing application and operating conditions. Therefore, the calculated bearing temperatures in the diagram are valid only when the bearing application and operating conditions are similar to those shown in this example.

The calculations for this diagram have been made using an SKF computer program to obtain the outer ring temperature. The load at each speed corresponds to the minimum recommended bearing life of 120 000 h. The highest bearing temperature shown in the diagram is 75 °C as it is customary to use oil lubrication at higher temperatures.

Machine data

Paper grades	all
Roll position	forming section
Paper speed	100–1 300 m/min (330–4 260 ft/min)

Operating conditions for the bearings

Ambient temperature	35 °C *(95 °F)*
Lubrication	grease
Base oil viscosity	175 mm²/s at 40 °C

Bearing application

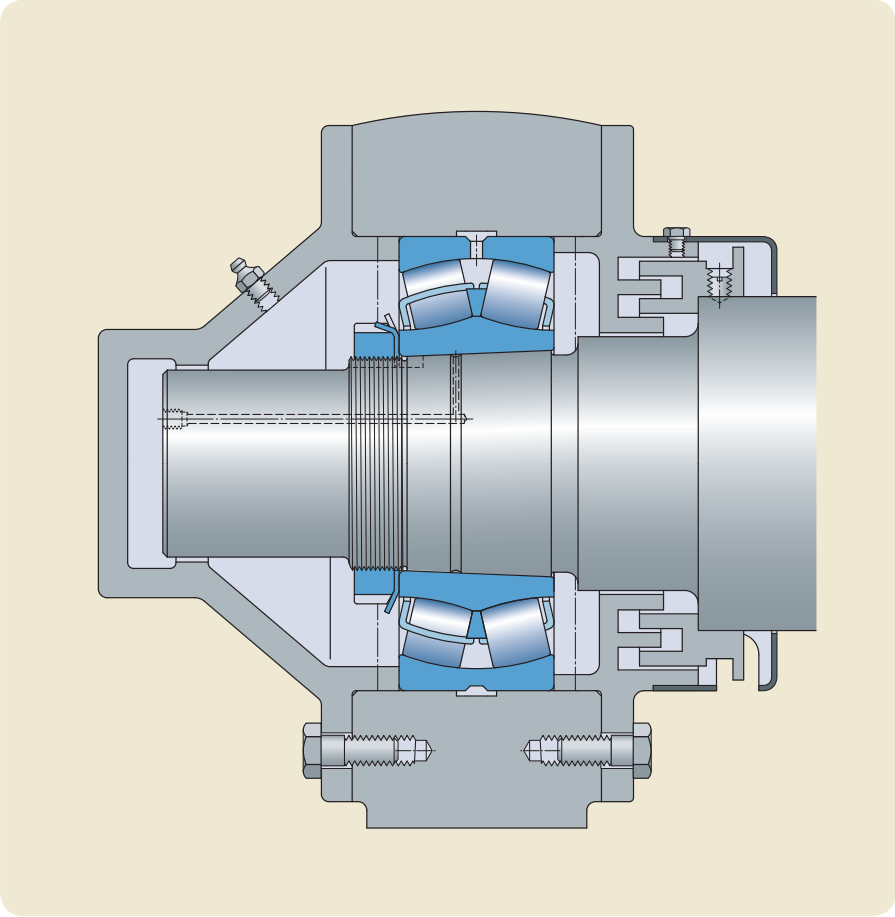

Bearing temperature/speed factor diagram

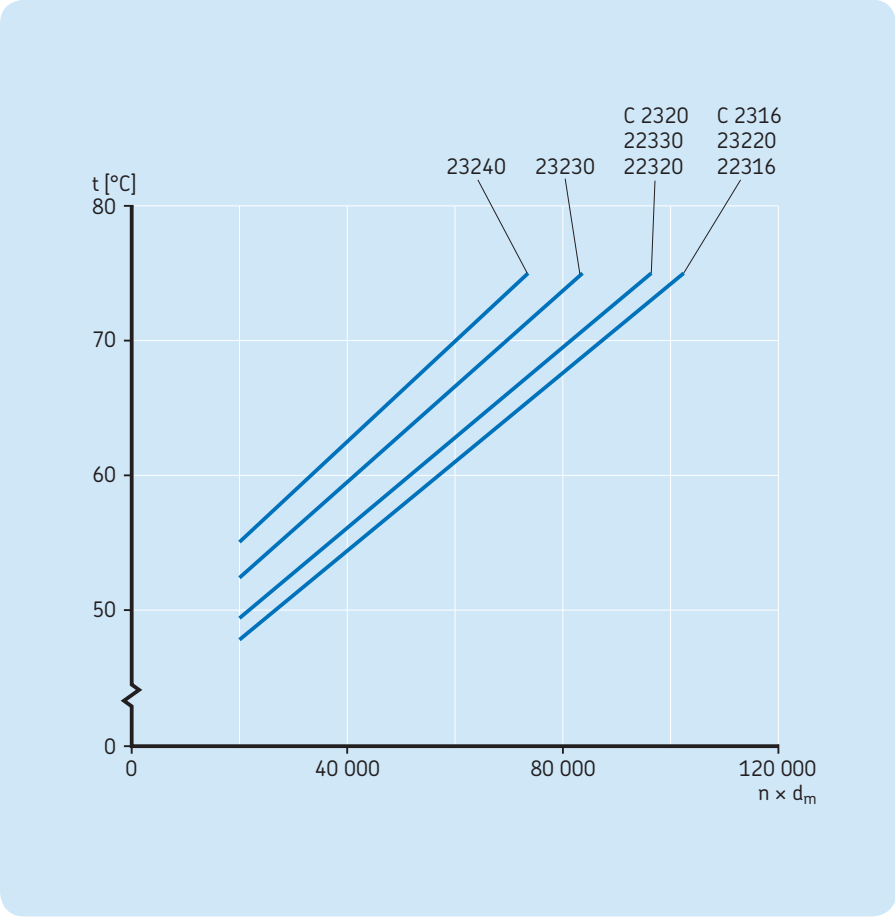

Example 2

Breast, forming and forward drive rolls (oil)

Lubrication guidelines

Bearings for these rolls are smaller and have a lower speed factor ($n \times d_m$) than suction roll bearings, which are often lubricated with the same oil. Therefore, the lubricant properties should be based on the operating conditions for the suction roll bearings (→ *example 6*). However, the bearings for the rolls in this example should have an oil flow resulting in a viscosity ratio κ according to the guidelines in *Chapter 9*, *Maintenance*, *How to avoid surface damage*, **page 28**.

General guidelines, as outlined in *Chapter 7*, *Lubrication*, *Oil lubrication* (→ **pages 13–16**), should also be taken into account.

Comments on the diagram

Bearing temperature depends on the bearing speed, applied load and external cooling or heating of the bearing arrangement. Heat transfer from the housing, shaft and the foundation is largely dependent on the bearing application and operating conditions. Therefore, the oil flow in the diagram is valid only when the bearing application and operating conditions are similar to those shown in this example.

The calculations for this diagram have been made using an SKF computer program to obtain the outer ring temperature. The load at each speed corresponds to the minimum recommended bearing life of 120 000 h. The oil flow in the diagram is based on the use of an ISO VG 220 oil and selected to fulfil two criteria: the κ guidelines and a bearing operating temperature of 75 °C. If an oil with lower viscosity than ISO VG 220 is used, then the oil flow must be increased.

Note that the diagram shows minimum acceptable oil flow. Slightly higher oil flow values are acceptable and beneficial in most cases.

Machine data

Paper grades	all
Roll position	forming section
Paper speed	700–2 200 m/min (2 300–7 220 ft/min)

Operating conditions for the bearings

Ambient temperature	40 °C (*104 °F*)
Lubrication	circulating oil
Oil viscosity	ISO VG 220
Oil inlet temperature	45 °C (*113 °F*)

Bearing application

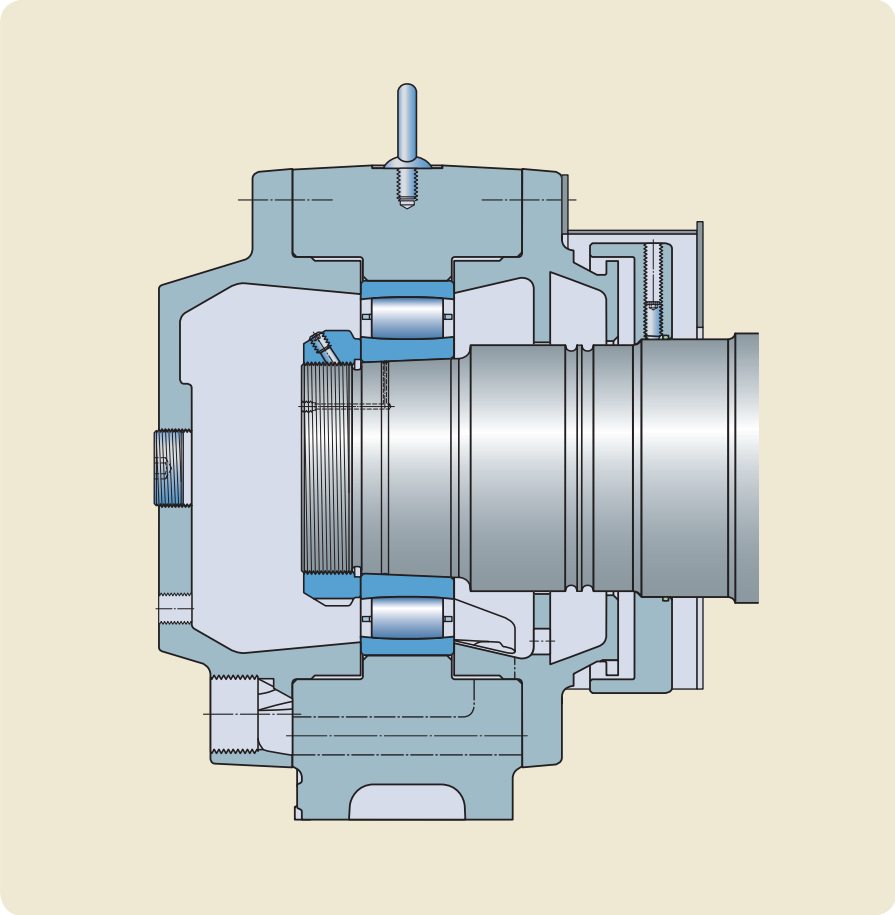

Oil flows for bearing temperature 75 °C (167 °F)

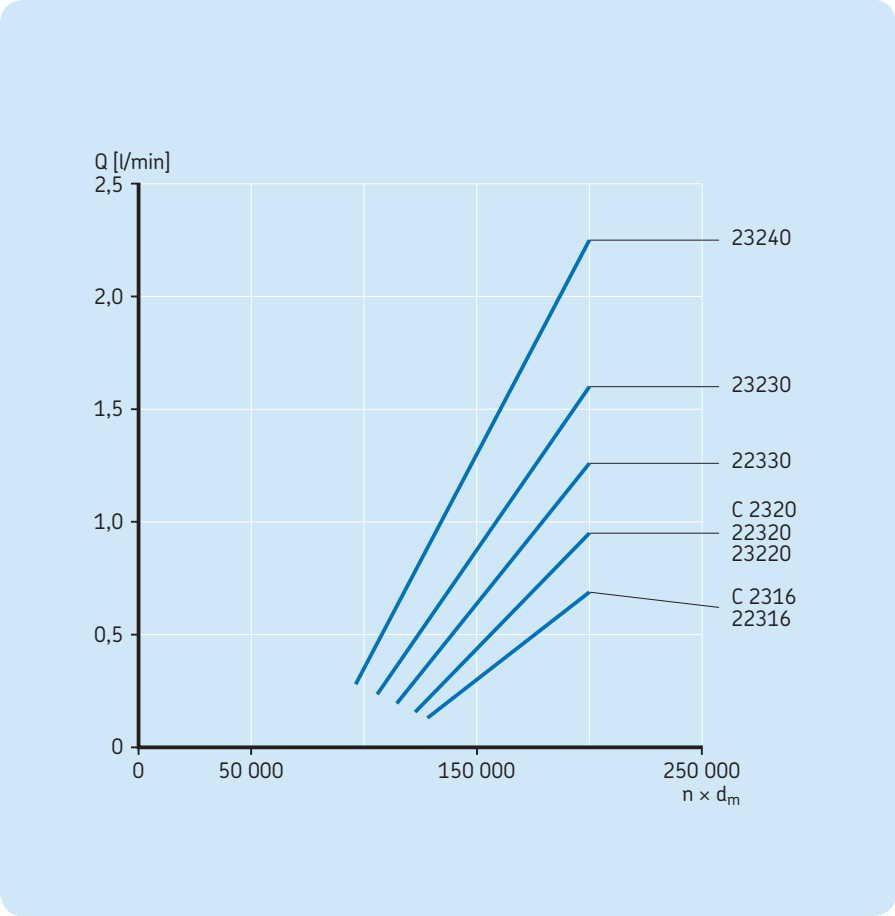

Example 3

Wire roll (grease)

Lubrication guidelines

SKF's experience is that a grease with a base oil viscosity of minimum 175 mm²/s provides good lubrication performance in this position. Rust protection and sealing properties have the highest priority in the forming section.

General guidelines, as outlined in *Chapter 7*, *Lubrication*, *Grease lubrication* (→ **pages 8–12**), should also be taken into account.

Comments on the diagram

Bearing temperature depends on the bearing speed, applied load and external cooling or heating of the bearing arrangement. Heat transfer from the housing, shaft and the foundation is largely dependent on the bearing application and operating conditions. Therefore, the calculated bearing temperatures in the diagram are valid only when the bearing application and operating conditions are similar to those shown in this example.

The calculations for this diagram have been made using an SKF computer program to obtain the outer ring temperature. The load at each speed corresponds to the minimum recommended bearing life of 120 000 h. The highest bearing temperature shown in the diagram is 75 °C as it is customary to use oil lubrication at higher temperatures.

Machine data

Paper grades	all
Roll position	forming section
Paper speed	100–1 300 m/min (330–4 260 ft/min)

Operating conditions for the bearings

Ambient temperature	35 °C *(95 °F)*
Lubrication	grease
Base oil viscosity	175 mm²/s at 40 °C

Bearing application

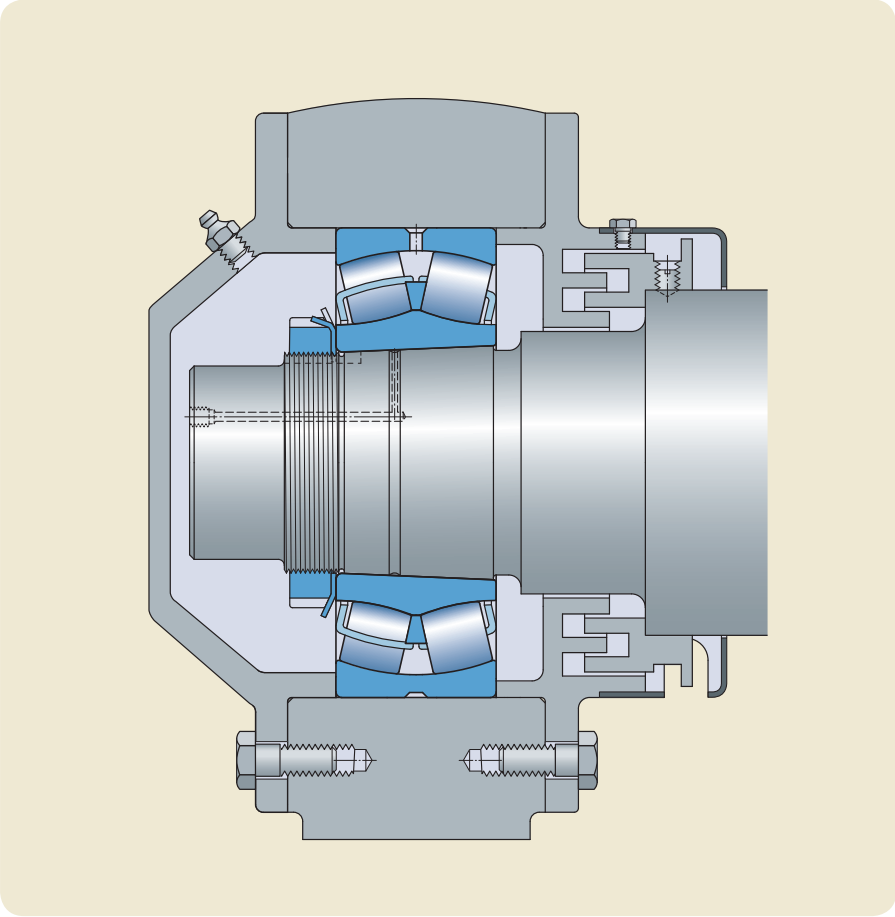

Bearing temperature/speed factor diagram

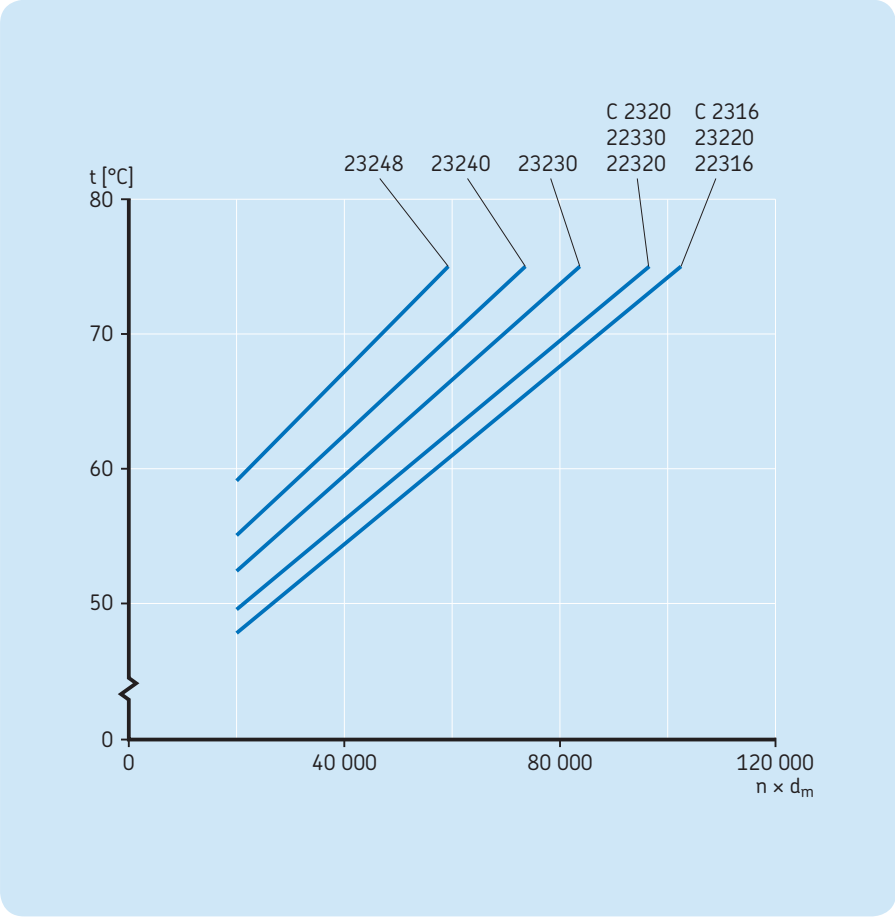

Example 4

Wire roll (oil)

Lubrication guidelines

Wire guide roll bearings are smaller and have a lower speed factor ($n \times d_m$) than suction roll bearings which are often lubricated with the same oil. Therefore, the lubricant properties should be based on the operating conditions for the suction roll bearings (→ *example 6*). However, the wire roll bearings should have an oil flow resulting in viscosity ratio κ according to the guidelines in *Chapter 9*, *Maintenance*, *How to avoid surface damage*, **page 28**.

General guidelines, as outlined in *Chapter 7*, *Lubrication*, *Oil lubrication* (**→ pages 13–16**), should also be taken into account.

Comments on the diagram

Bearing temperature depends on the bearing speed, applied load and external cooling or heating of the bearing arrangement. Heat transfer from the housing, shaft and the foundation is largely dependent on the bearing application and operating conditions. Therefore, the oil flow in the diagram is valid only when the bearing application and operating conditions are similar to those shown in this example.

The calculations for this diagram have been made using an SKF computer program to give the outer ring temperature. The load at each speed corresponds to the minimum recommended bearing life of 120 000 h. The oil flow in the diagram is based on the use of an ISO VG 220 oil and selected to fulfil two criteria: the κ guidelines and a bearing operating temperature of 75 °C. If an oil with lower viscosity than ISO VG 220 is used, then the oil flow must be increased.

Note that the diagram shows minimum acceptable oil flow. Slightly higher oil flow values are acceptable and beneficial in most cases.

Machine data

Paper grades	liner, fine, newsprint, tissue
Roll position	forming section
Paper speed	700–2 200 m/min (2 300–7 220 ft/min)

Operating conditions for the bearings

Ambient temperature	40 °C (*104 °F*)
Lubrication	circulating oil
Oil viscosity	ISO VG 220
Oil inlet temperature	45 °C (*113 °F*)

Bearing application

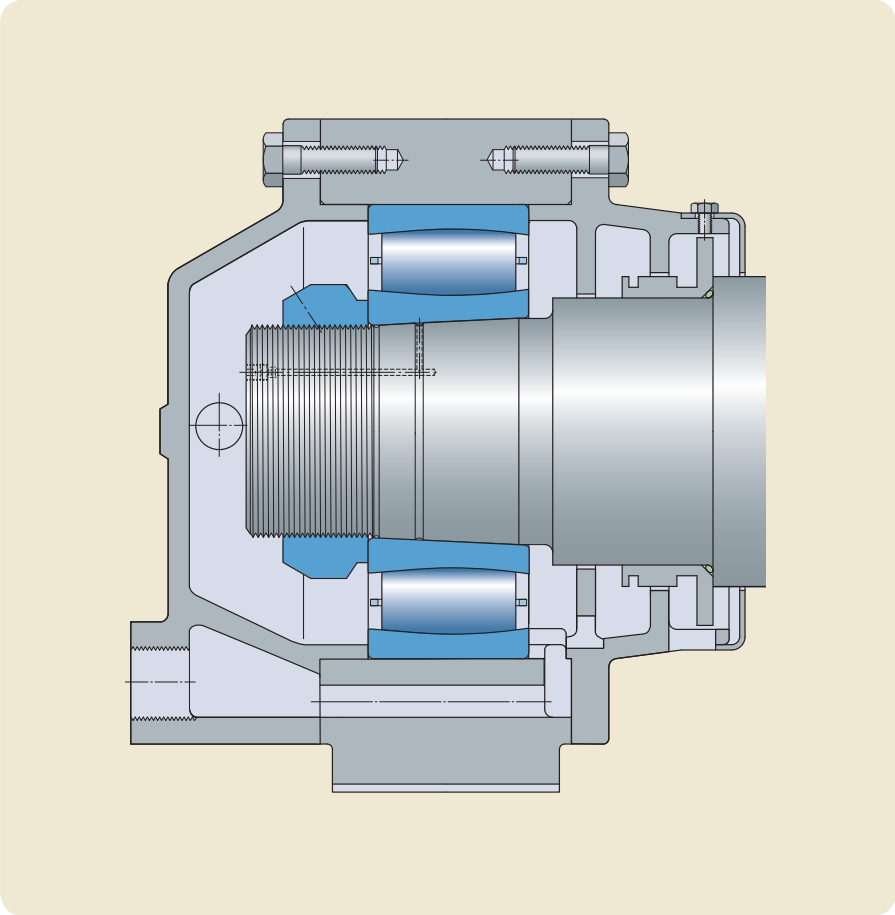

Oil flows for bearing temperature 75 °C (167 °F)

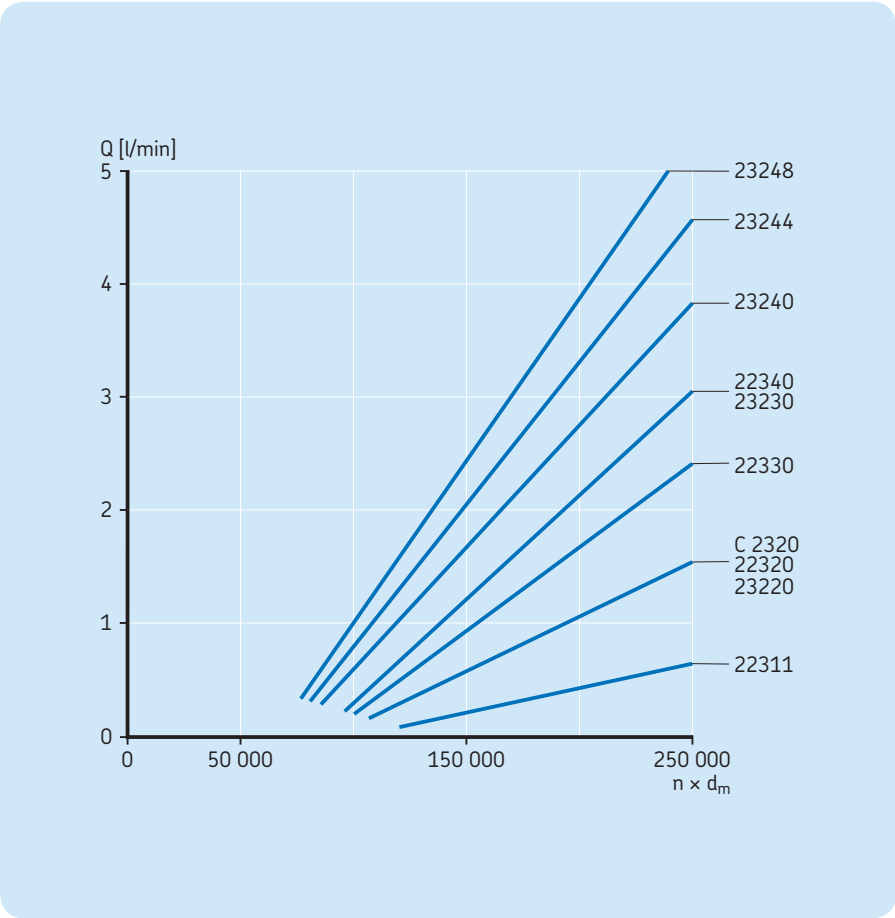

Example 5

Suction roll (grease)

Lubrication guidelines

SKF's experience is that a grease with a base oil viscosity of minimum 175 mm²/s provides good lubrication performance in this position. Rust protection and sealing properties have the highest priority in the forming section.

General guidelines, as outlined in *Chapter 7*, *Lubrication*, *Grease lubrication* (→ **pages 8–12**), should also be taken into account.

Comments on the diagram

Bearing temperature depends on the bearing speed, applied load and external cooling or heating of the bearing arrangement. Heat transfer from the housing, shaft and the foundation is largely dependent on the bearing application and operating conditions. Therefore, the calculated bearing temperatures in the diagram are valid only when the bearing application and operating conditions are similar to those shown in this example.

The calculations for this diagram have been made using an SKF computer program to give the outer ring temperature at different speeds. The load at each speed corresponds with the minimum recommended bearing life of 120 000 h.

The maximum bearing temperature shown in the diagram is 75 °C as it is customary to use oil lubrication at higher temperatures.

Machine data

Paper grades	board, liner
Roll position	forming section
Paper speed	100–500 m/min (330–1 640 ft/min)

Operating conditions for the bearings

Ambient temperature	40 °C (*104 °F*)
Lubrication	grease
Base oil viscosity	175 mm²/s at 40 °C

Bearing application

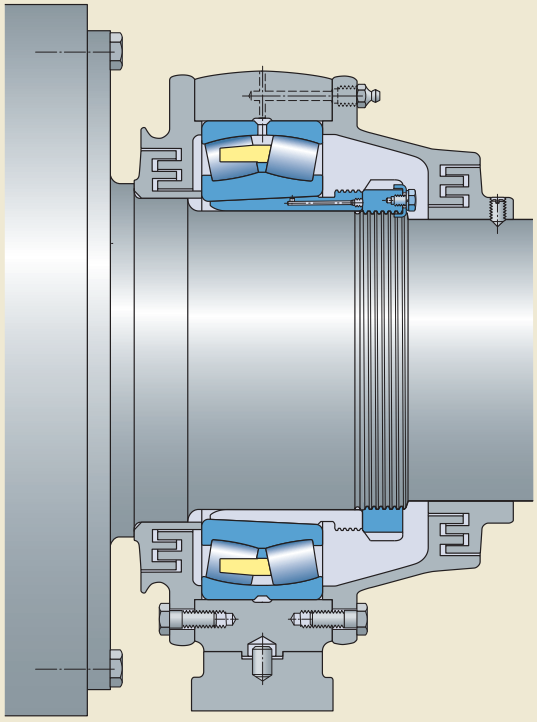

Bearing temperature/speed factor diagram

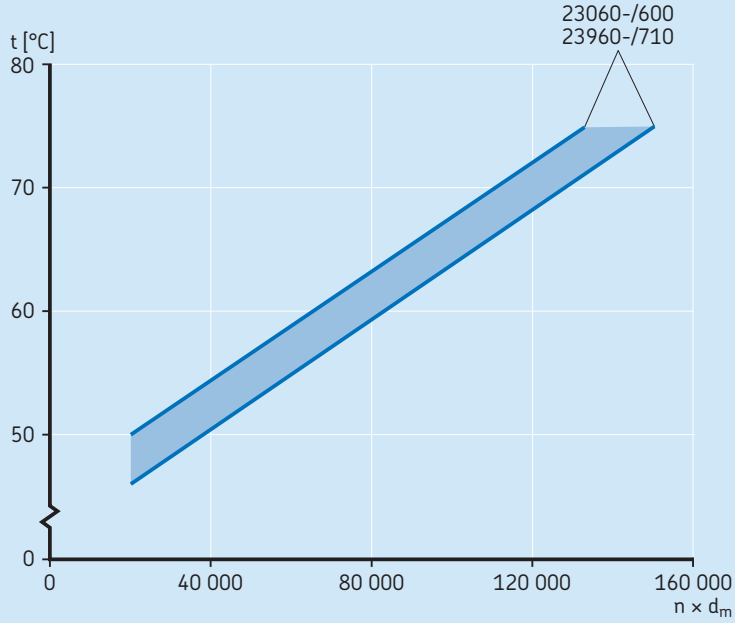

Example 6

Suction roll (oil)

Lubrication guidelines

As suction roll bearings are large and sometimes rotate at very high speeds, there is a risk of smearing. To avoid smearing, the oil should have EP additives and the viscosity ratio κ should be according to the guidelines in *Chapter 9*, *Maintenance*, *How to avoid surface damage*, **page 28**.

General guidelines, as outlined in *Chapter 7*, *Lubrication*, *Oil lubrication* (→ **pages 13–16**), should also be taken into account.

Comments on the diagram

Bearing temperature depends on the bearing speed, applied load and external cooling or heating of the bearing arrangement. Heat transfer from the housing, shaft and the foundation is largely dependent on the bearing application and operating conditions. Therefore, the oil flow in the diagram is valid only when the bearing application and operating conditions are similar to those shown in this example.

The calculations for this diagram have been made using an SKF computer program to obtain the outer ring temperature. The load at each speed corresponds to the minimum recommended bearing life of 120 000 h. The oil flow in the diagram is based on the use of an ISO VG 220 oil and selected to fulfil two criteria: the κ guidelines and a bearing operating temperature of 75 °C. If an oil with lower viscosity than ISO VG 220 is used for these bearings, then the oil flows must be increased.

A thicker oil, e.g. ISO VG 320, is advantageous and will improve the lubrication conditions, but the bearing temperature will increase a little.

Note that the diagram shows minimum acceptable oil flow. Slightly higher oil flow values are acceptable and beneficial in most cases.

Machine data

Paper grades	board, liner, fine, newsprint
Roll position	forming section
Paper speed	400–2 000 m/min (1 320–6 550 ft/min)

Operating conditions for the bearings

Ambient temperature	45 °C *(113 °F)*
Lubrication	circulating oil
Oil viscosity	ISO VG 220
Oil inlet temperature	45 °C *(113 °F)*

Bearing application

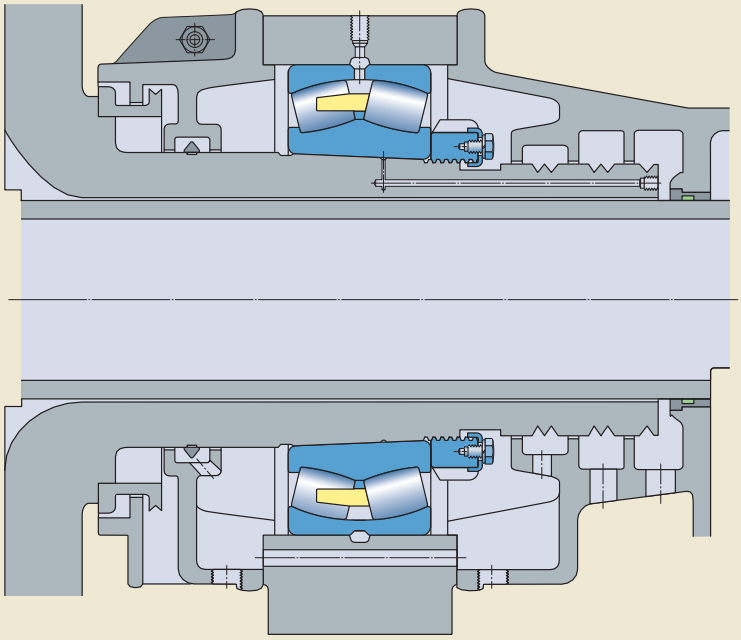

Oil flows for bearing temperature 75 °C (167 °F)

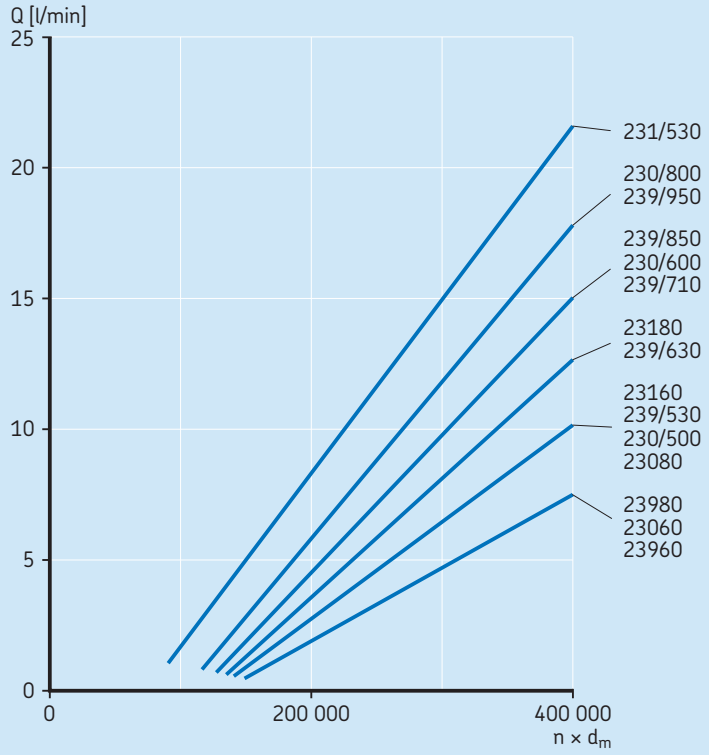

Example 7

Felt roll (grease)

Lubrication guidelines

SKF's experience is that a grease with a base oil viscosity of minimum 175 mm²/s provides good lubrication performance in this position. Rust protection and sealing properties have the highest priority in the forming section.

General guidelines, as outlined in *Chapter 7*, *Lubrication*, *Grease lubrication* (→ **pages 8–12**), should also be taken into account.

Comments on the diagram

Bearing temperature depends on the bearing speed, applied load and external cooling or heating of the bearing arrangement. Heat transfer from the housing, shaft and the foundation is largely dependent on the bearing application and operating conditions. Therefore, the calculated bearing temperatures in the diagram are valid only when the bearing application and operating conditions are similar to those shown in this example.

The calculations for this diagram have been made using an SKF computer program to give the outer ring temperature. The load at each speed corresponds to the minimum recommended bearing life of 120 000 h. The highest bearing temperature shown in the diagram is 75 °C as it is customary to use oil lubrication at higher temperatures.

Machine data

Paper grades	all
Roll position	press section
Paper speed	100–1 000 m/min (330–3 300 ft/min)

Operating conditions for the bearings

Ambient temperature	40 °C (*104 °F*)
Lubrication	grease
Base oil viscosity	175 mm²/s at 40 °C

Bearing application

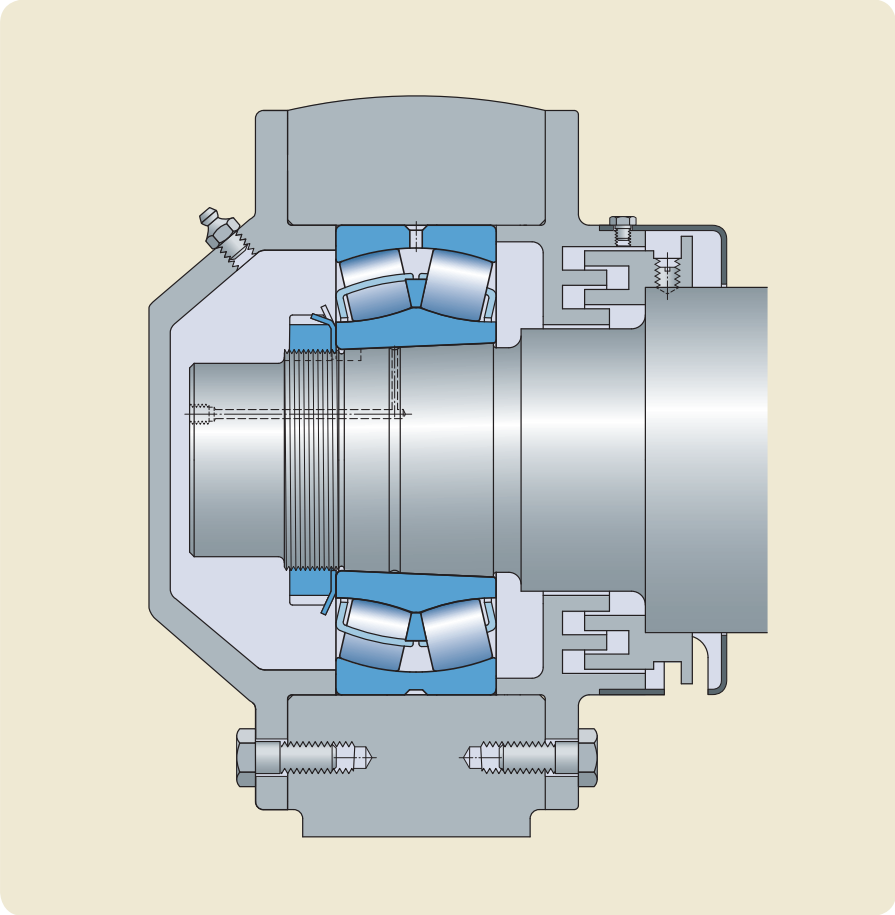

Bearing temperature/speed factor diagram

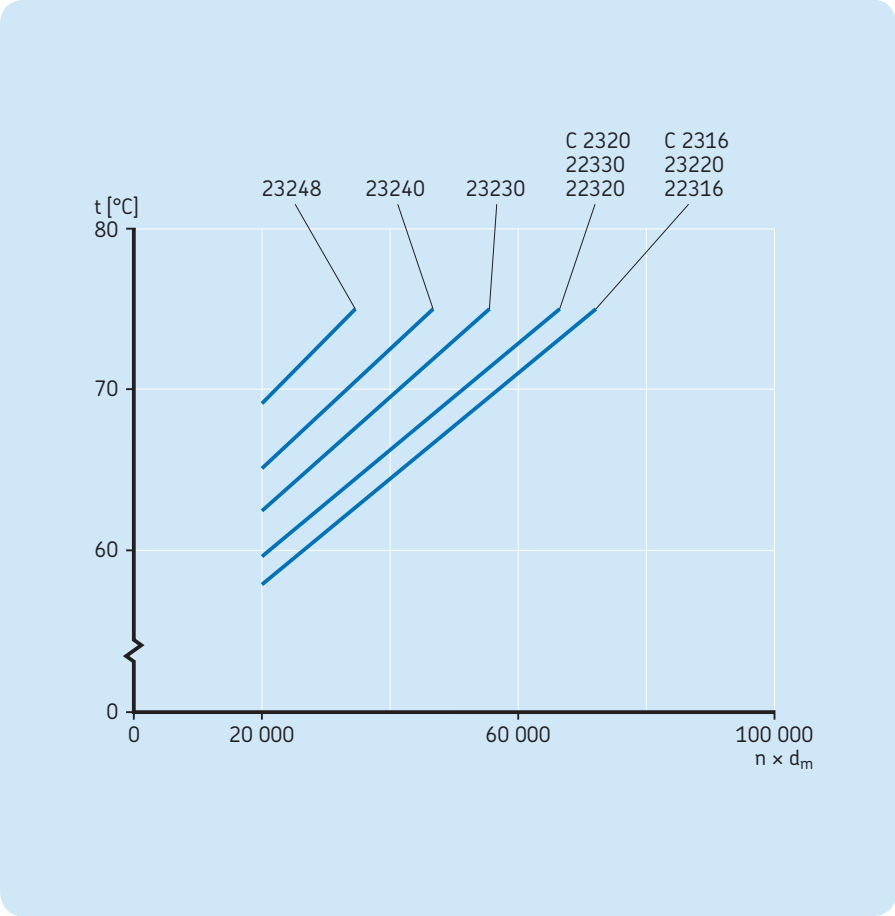

Example 8

Felt roll (oil)

Lubrication guidelines

Felt roll bearings are smaller, and have lower speed factors ($n \times d_m$) than press roll bearings which are often lubricated with the same oil. Therefore, the lubricant properties should be based on the operating conditions for the press roll bearings. However, the felt roll bearings should have an oil flow resulting in a viscosity ratio κ according to the guidelines in *Chapter 9*, *Maintenance*, *How to avoid surface damage*, **page 28**.

General guidelines, as outlined in *Chapter 7*, *Lubrication*, *Oil lubrication* (→ **pages 13–16**), should also be taken into account.

Comments on the diagram

Bearing temperature depends on the bearing speed, applied load and external cooling or heating of the bearing arrangement. Heat transfer from the housing, shaft and the foundation is largely dependent on the bearing application and operating conditions. Therefore, the oil flow in the diagram is valid only when the bearing application and operating conditions are similar to those shown in this example.

The calculations for this diagram have been made using an SKF computer program to obtain the outer ring temperature. The load at each speed corresponds to the minimum recommended bearing life of 120 000 h. The oil flow in the diagram is based on the use of an ISO VG 220 oil and selected to fulfil two criteria: the κ guidelines and a bearing operating temperature of 75 °C.

Note that the diagram shows minimum acceptable oil flow. Slightly higher oil flow values are acceptable and beneficial in most cases.

Machine data

Paper grades	all
Roll position	press section
Paper speed	400–2 200 m/min (1 310–7 220 ft/min)

Operating conditions for the bearings

Ambient temperature	45 °C *(113 °F)*
Lubrication	circulating oil
Oil viscosity	ISO VG 220
Oil inlet temperature	45 °C *(113 °F)*

Bearing application

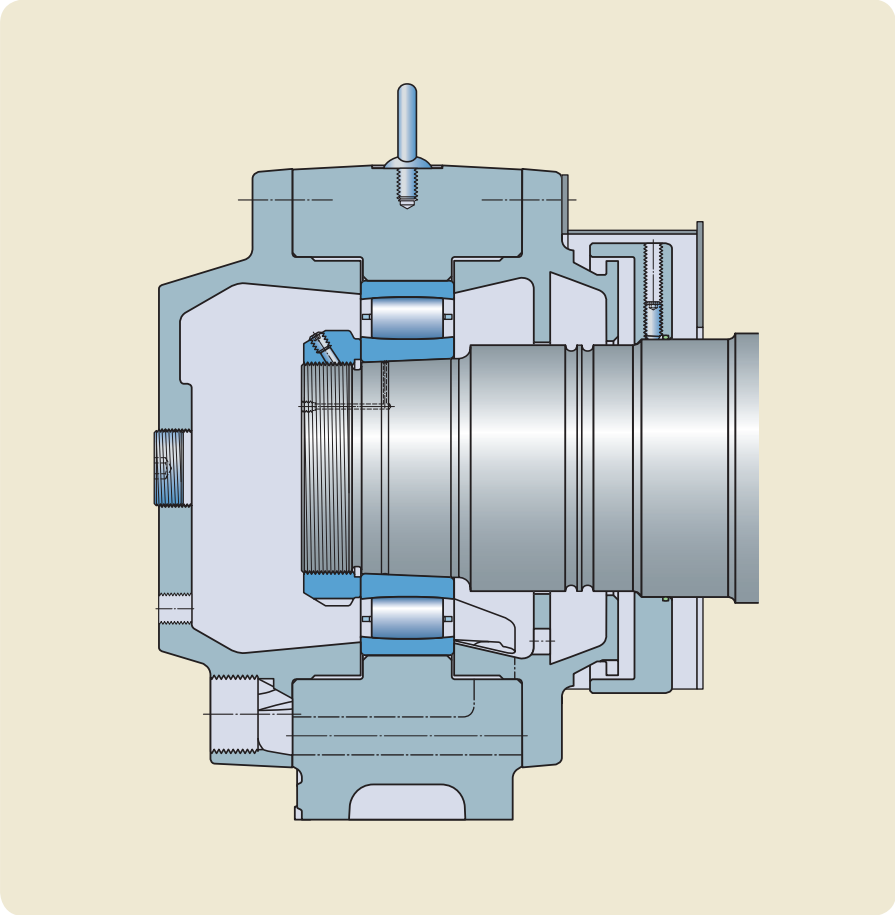

Oil flows for bearing temperature 75 °C (167 °F)

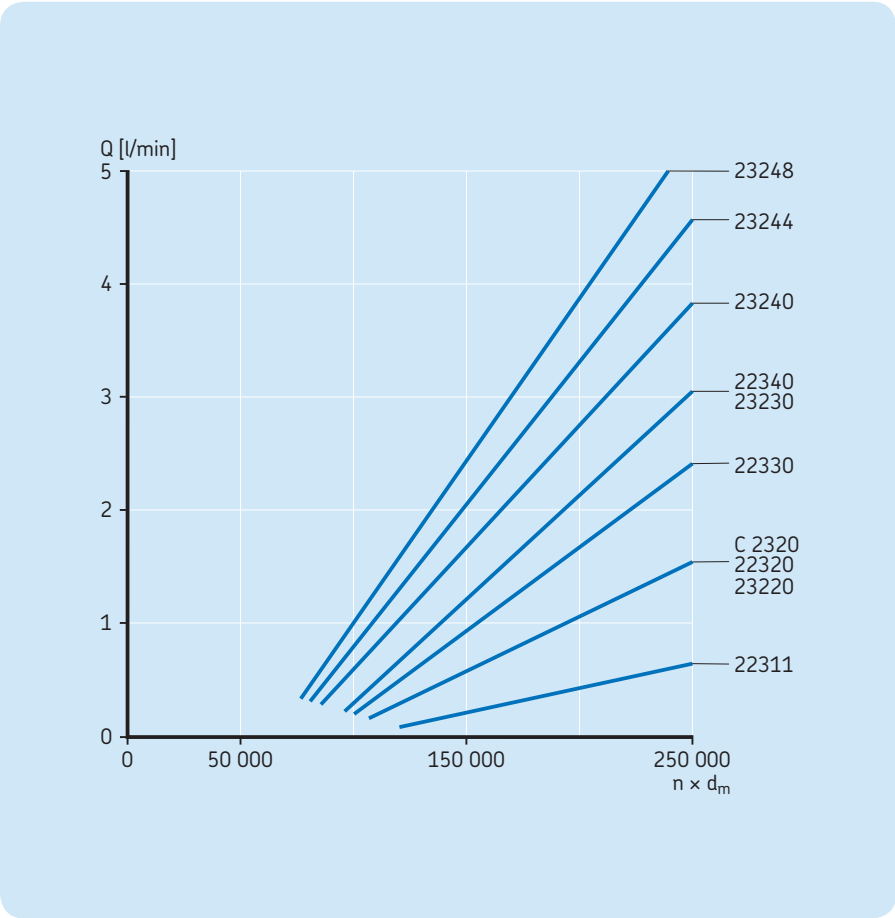

Example 9

Press roll (grease)

Lubrication guidelines

SKF's experience is that a grease with a base oil viscosity of minimum 175 mm²/s provides good lubrication performance in this position. Rust protection and sealing properties have the highest priority in the forming section.

General guidelines, as outlined in *Chapter 7*, *Lubrication*, *Grease lubrication* (→ **pages 8–12**), should also be taken into account.

Comments on the diagram

Bearing temperature depends on the bearing speed, applied load and external cooling or heating of the bearing arrangement. Heat transfer from the housing, shaft and the foundation is largely dependent on the bearing application and operating conditions. Therefore, the calculated bearing temperatures in this example are valid only when the bearing application and operating conditions are similar to those shown in this example.

The calculations for this diagram have been made using an SKF computer program to obtain the outer ring temperature at different speeds. The load at each speed corresponds with the minimum recommended bearing life of 120 000 h.

The maximum bearing temperature shown in the diagram is 75 °C as it is customary to use oil lubrication at higher temperatures.

Machine data

Paper grades	board, liner
Roll position	press section
Paper speed	100–500 m/min (330–1 640 ft/min)

Operating conditions for the bearings

Ambient temperature	40 °C (*104 °F*)
Lubrication	grease
Base oil viscosity	175 mm²/s at 40 °C

Bearing application

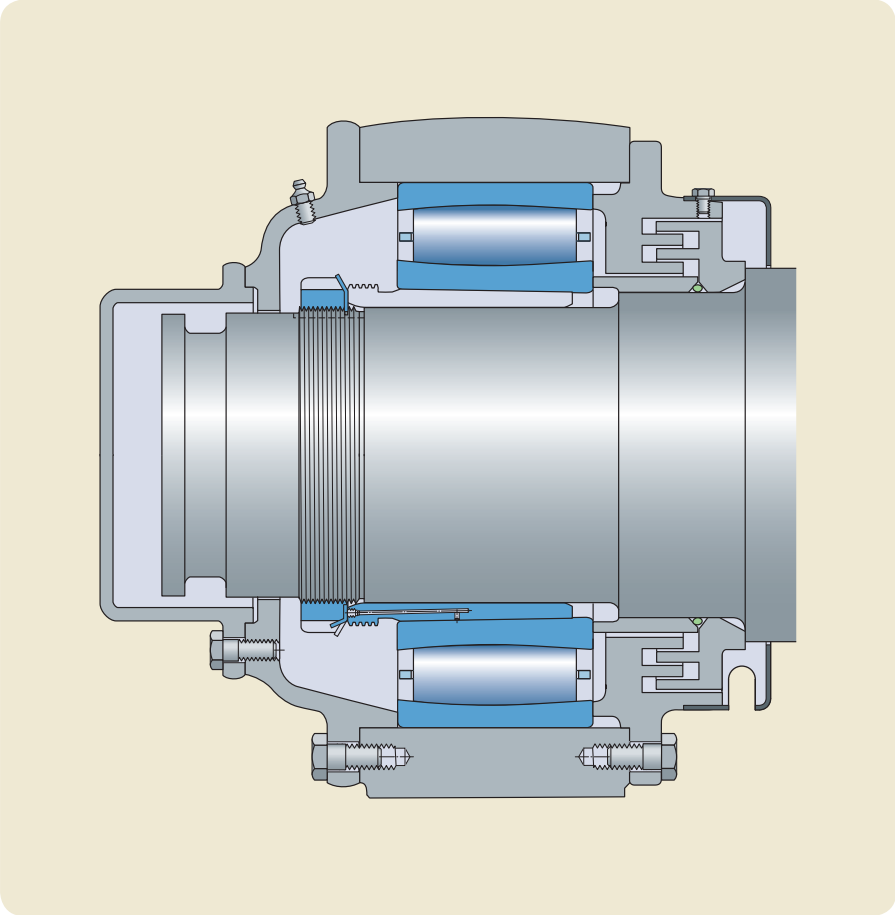

Bearing temperature/speed factor diagram

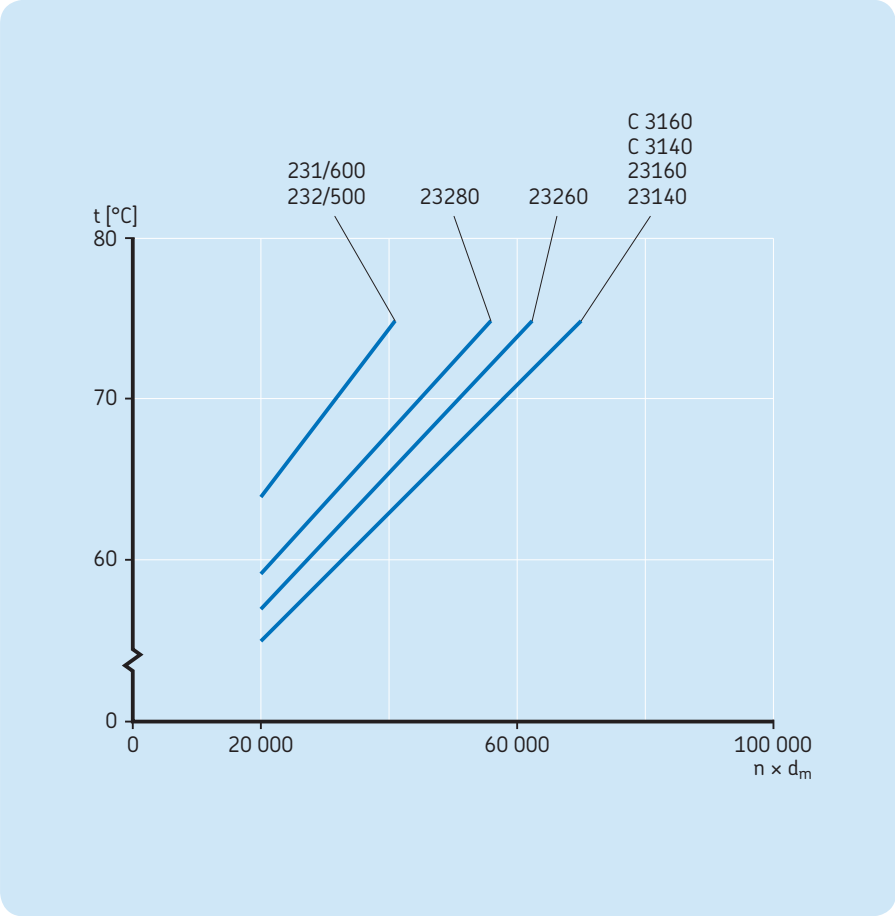

Example 10

Press roll (oil)

Lubrication guidelines

As press roll bearings are large and sometimes rotate at high speeds, there is a risk of smearing. To avoid smearing, the oil should have EP additives and the viscosity ratio κ should be according to the guidelines in *Chapter 9*, *Maintenance*, *How to avoid surface damage*, **page 28**.

General guidelines, as outlined in *Chapter 7*, *Lubrication*, *Oil lubrication* (→ **pages 13–16**), should also be taken into account.

Comments on the diagram

Bearing temperature depends on the bearing speed, applied load and external cooling or heating of the bearing arrangement. Heat transfer from the housing, shaft and the foundation is largely dependent on the bearing application and operating conditions. Therefore, the oil flow in the diagram is valid only when the bearing application and operating conditions are similar to those shown in this example.

The calculations for this diagram have been made using an SKF computer program to obtain the outer ring temperature. The load at each speed corresponds to the minimum recommended bearing life of 120 000 h.

The oil flow in the diagram is based on the use of an ISO VG 220 oil and selected to fulfil two criteria: the κ guidelines and a bearing operating temperature of 75 °C. If an oil with lower viscosity than ISO VG 220 is used for these bearings, then the oil flow must be increased. A thicker oil, e.g. ISO VG 320, is advantageous and will improve the lubrication conditions, but the bearing temperature will increase a little.

Note that the diagram shows minimum acceptable oil flow. Slightly higher oil flow values are acceptable and beneficial in most cases.

Machine data

Paper grades	board, liner, fine, newsprint
Roll position	press section
Paper speed	400–2 000 m/min (1 320–6 550 ft/min)

Operating conditions for the bearings

Ambient temperature	45 °C *(113 °F)*
Lubrication	circulating oil
Oil viscosity	ISO VG 220
Oil inlet temperature	45 °C *(113 °F)*

Bearing application

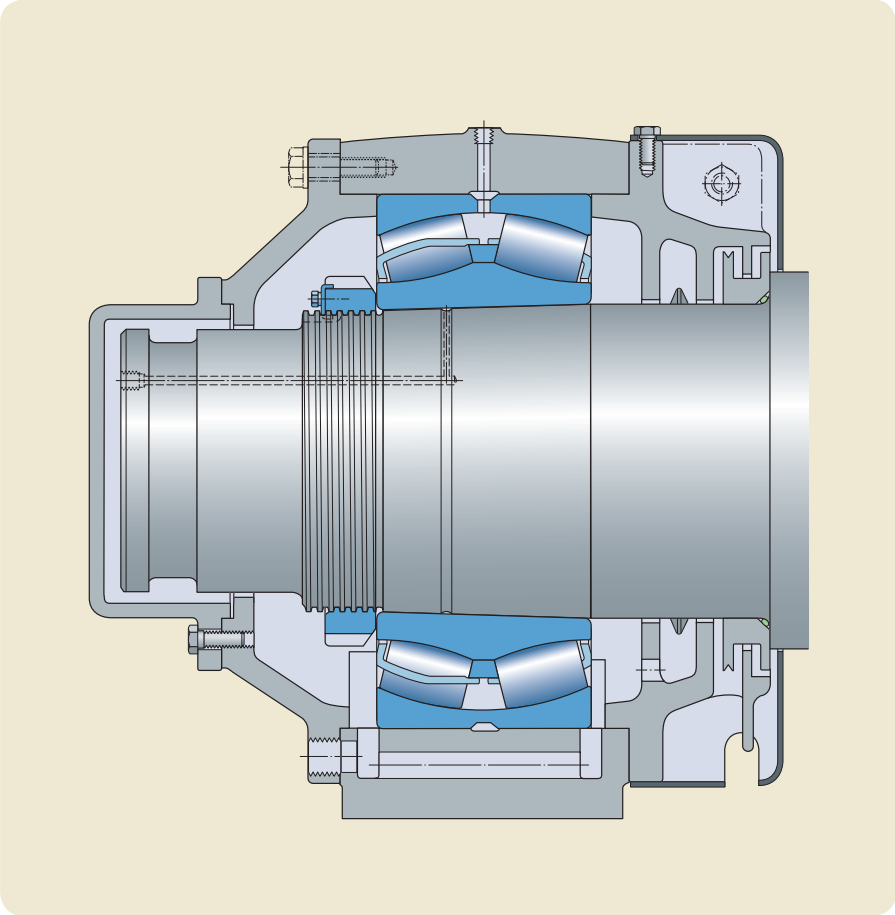

Oil flows for bearing temperature 75 °C (167 °F)

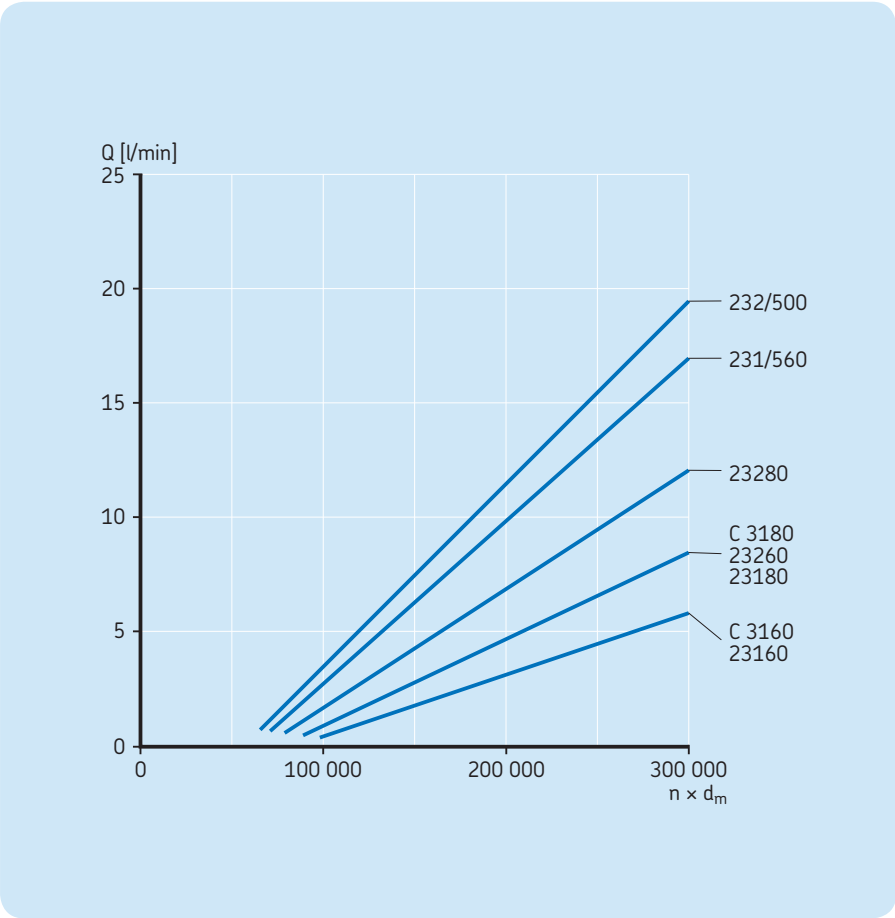

Example 11

Press roll, deflection compensating (oil)

Lubrication guidelines

As press roll bearings are large and sometimes rotate at very high speeds, there is a risk of smearing. To avoid smearing, the oil should have EP additives and the viscosity ratio κ should be according to the guidelines in *Chapter 9*, *Maintenance*, *How to avoid surface damage*, **page 28**.

General guidelines, as outlined in *Chapter 7*, *Lubrication*, *Oil lubrication* (→ **pages 13–16**), should also be taken into account.

Comments on the diagram

Bearing temperature depends on the bearing speed, applied load and external cooling or heating of the bearing arrangement. Heat transfer from the housing, shaft and the foundation is largely dependent on the bearing application and operating conditions. Therefore, the oil flow in the diagram is valid only when the bearing application and operating conditions are similar to those shown in this example.

The calculations for this diagram have been made using an SKF computer program to obtain the outer ring temperature. The load at each speed corresponds to the minimum recommended bearing life of 120 000 h.

The oil flow in the diagram is based on the use of an ISO VG 220 oil and selected to fulfil two criteria: the κ guidelines and a bearing operating temperature of 75 °C. If an oil with lower viscosity than ISO VG 220 is used for these bearings, then the oil flow must be increased. A thicker oil, e.g. ISO VG 320, is advantageous and will improve the lubrication conditions, but the bearing temperature will increase a little.

Note that the diagram shows minimum acceptable oil flow. Slightly higher oil flow values are acceptable and beneficial in most cases.

Machine data

Paper grades	all
Roll position	press section
Paper speed	400–2 000 m/min (1 320–6 550 ft/min)

Operating conditions for the bearings

Ambient temperature	45 °C *(113 °F)*
Lubrication	circulating oil
Oil viscosity	ISO VG 220
Oil inlet temperature	45 °C *(113 °F)*

Bearing application

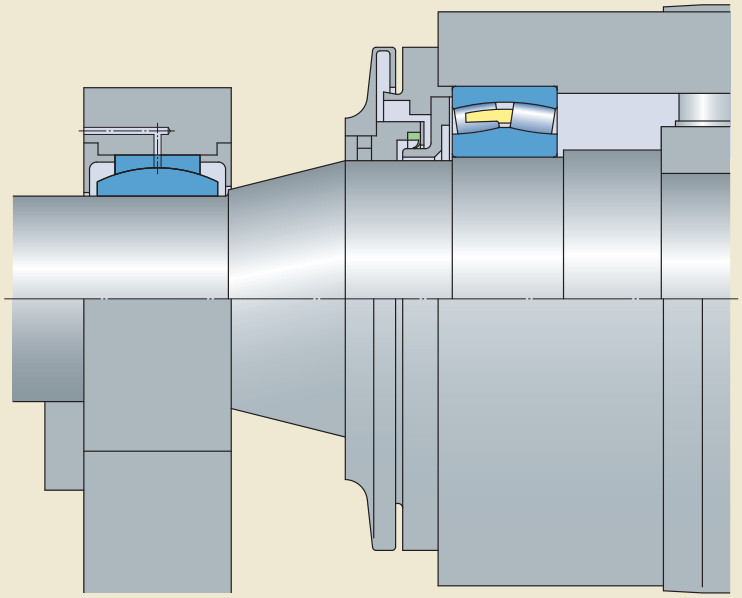

Oil flows for bearing temperature 75 °C (167 °F)

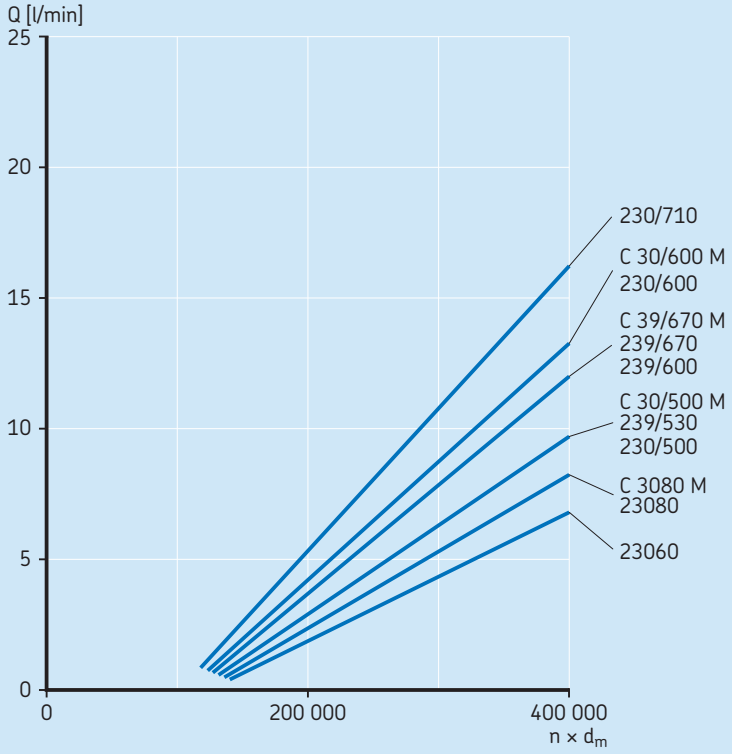

Example 12

Felt roll (grease)

Lubrication guidelines

This example is included in the handbook as there are still some old machine in service using grease lubrication for guide roll bearings in the dryer section.

However, SKF's experience is that it is difficult to find "standard" greases which will provide good lubrication properties at operating temperatures above 120 °C. Therefore, the SKF test program for high-temperature greases is based on a maximum bearing operating temperature of 120 °C.

Greases which have passed the test programme should provide sufficient lubrication for the bearings in this position. Oxidation stability and oil bleeding properties have the highest priority in the dryer section.

General guidelines, as outlined in *Chapter 7*, *Lubrication*, *Grease lubrication* (→ **pages 8–12**), should also be taken into account.

Comments on the diagram

Bearing temperature depends on the bearing speed, applied load and external cooling or heating of the bearing arrangement. Heat transfer from the housing, shaft and the foundation is largely dependent on the bearing application and operating conditions. Therefore, the calculated bearing temperatures in this example are valid only when the bearing application and operating conditions are similar to those shown in this example.

The calculations for this diagram have been made using an SKF computer program to obtain the outer ring temperature at different speeds. The load at each speed corresponds with the minimum recommended bearing life of 200 000 h.

Note that the ambient temperature has a great influence on the bearing operating temperature.

Machine data

Paper grades	board, liner, fine, newsprint
Roll position	dryer section
Paper speed	100–800 m/min (330–2 620 ft/min)

Operating conditions for the bearings

Ambient temperature	80–100 °C *(176–212 °F)*
Lubrication	grease
Base oil viscosity	400 mm²/s at 40 °C

Bearing application

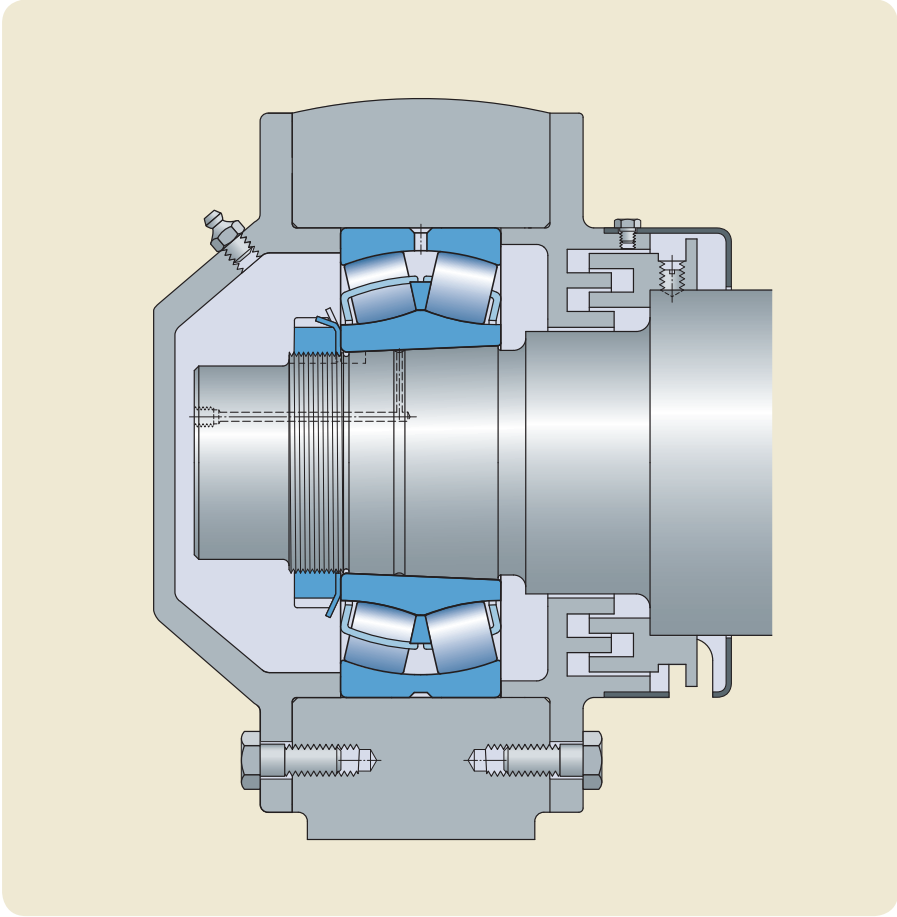

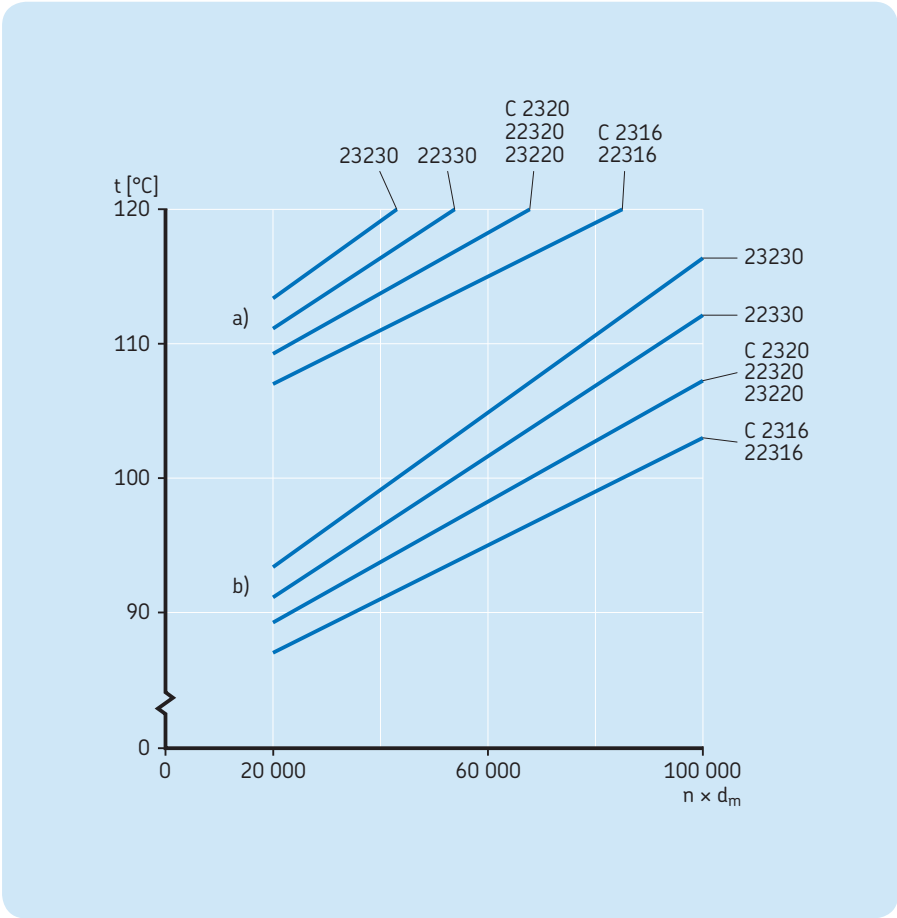

Bearing temperature/ speed factor diagram
a) Ambient temperature 100 °C (212 °F)
b) Ambient temperature 80 °C (176 °F)

Example 13

Felt roll (oil)

Lubrication guidelines

Felt roll bearings have better operating conditions than drying cylinder bearings which are lubricated from the same circulating oil system. Therefore, the lubricant properties should be based on the operating conditions for drying cylinder bearings. However, the felt roll bearings should have an oil flow resulting in viscosity ratio κ according to the guidelines in *Chapter 9*, *Maintenance*, *How to avoid surface damage*, **page 28**.

General guidelines, as outlined in *Chapter 7*, *Lubrication*, *Oil lubrication* (→ **pages 13–16**), should also be taken into account.

Comments on the diagram

Bearing temperature depends on the bearing speed, applied load and external cooling or heating of the bearing arrangement. Heat transfer from the housing, shaft and the foundation is largely dependent on the bearing application and operating conditions. Therefore, the oil flow in the diagram is valid only when the bearing application and operating conditions are similar to those shown in this example.

The calculations for this diagram have been made using SKF computer program to obtain the outer ring temperature. The load at each speed corresponds to the minimum recommended bearing life of 200 000 h.

The oil flow in the diagram is based on the use of an ISO VG 220 oil and selected to fulfil two criteria: the κ guidelines and a bearing operating temperature of 90 °C. If an oil with lower viscosity than ISO VG 220 is used, then the flow must be increased. A thicker oil, e.g. ISO VG 320, is advantageous and will improve the lubrication conditions, but the bearing temperature will increase a little.

Note that the diagram shows minimum acceptable oil flow. Slightly higher oil flow values are acceptable and beneficial in most cases.

Machine data

Paper grades	board, liner, fine, newsprint
Roll position	dryer section
Paper speed	400–2 000 m/min (1 310–6 550 ft/min)

Operating conditions for the bearings

Ambient temperature	100 °C *(212 °F)*
Lubrication	circulating oil
Oil viscosity	ISO VG 220
Oil inlet temperature	60 °C *(140 °F)*

Bearing application

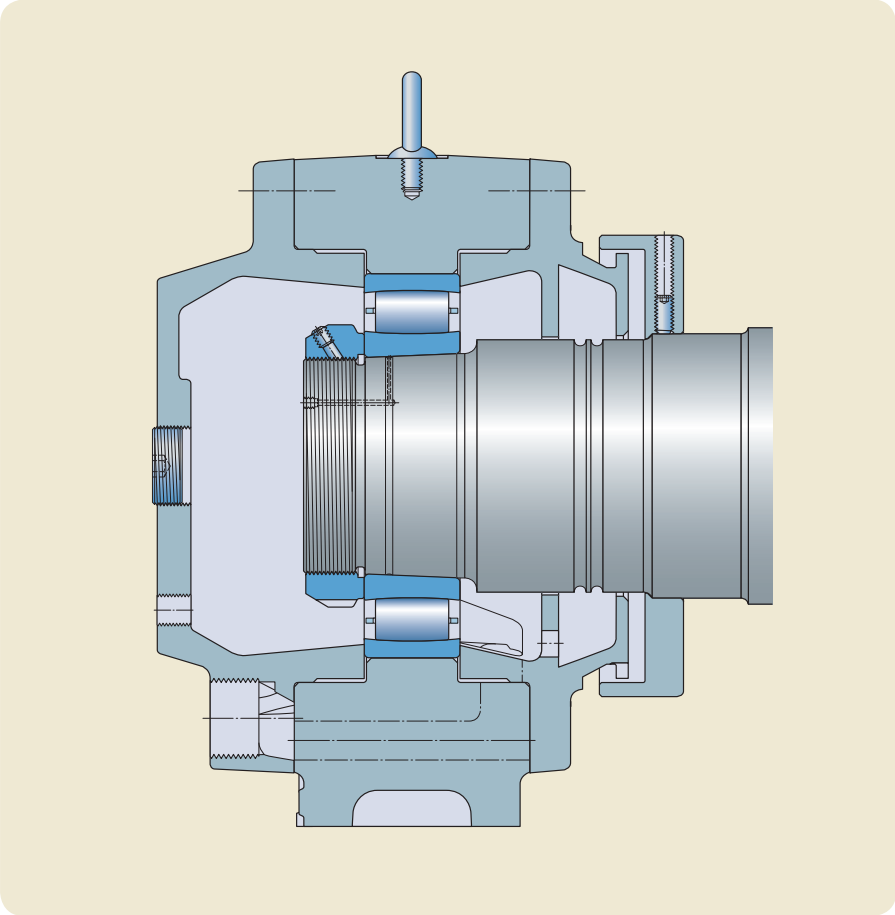

Oil flows for bearing temperatures 90 °C (194 °F)

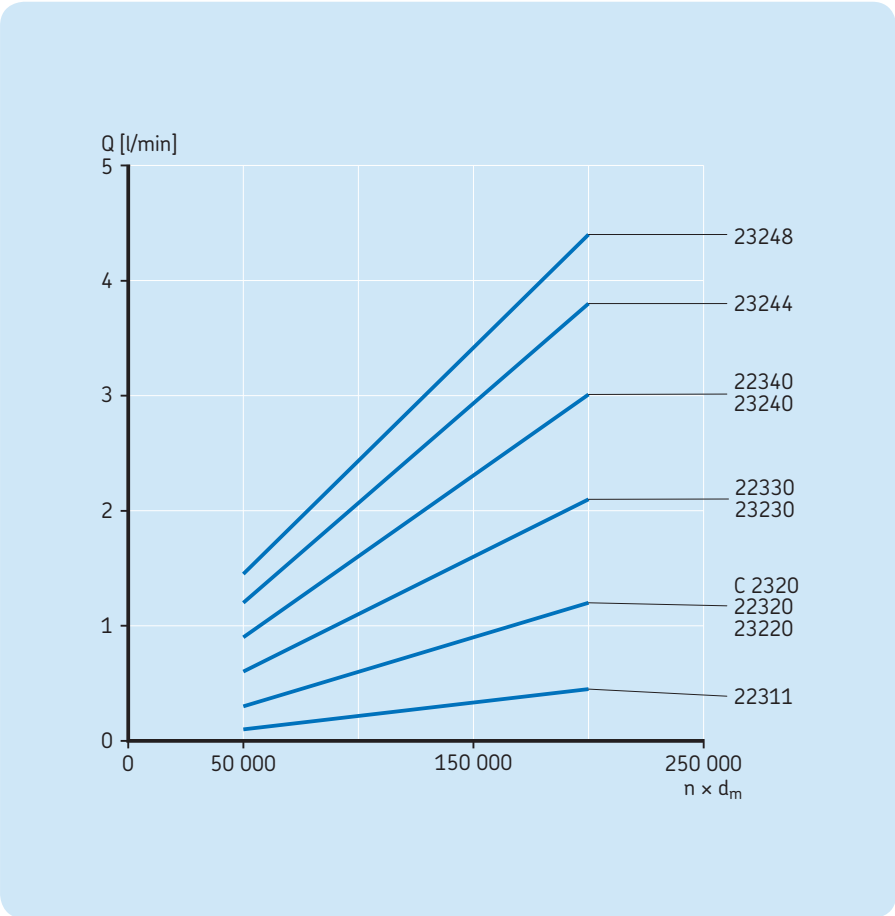

Example 14

Drying cylinder with steam temperature 140 °C (284 °F) (oil bath)

Lubrication guidelines

As the drying cylinder bearings in this example rotate at very low speeds and are subjected to high temperatures, there will be metallic contact between rollers and raceways. This means that there is a risk of surface distress. To avoid this risk, the lubricating oil should have efficient AW additives and a viscosity ratio κ according to the guidelines in *Chapter 9*, *Maintenance*, *How to avoid surface damage*, **page 28**.

A synthetic oil is recommended, because mineral oils are not suitable at temperatures above 120 °C.

General guidelines, as outlined in *Chapter 7*, *Lubrication*, *Oil lubrication* (→ **pages 13–16**), should also be taken into account.

Comments on the diagram

Bearing temperature depends on the bearing speed, applied load and external cooling or heating of the bearing arrangement. Therefore, the calculated bearing temperatures in the diagram are valid only when the bearing application and operating conditions are similar to those shown in this example.

The calculations for this diagram have been made using an SKF computer program to obtain the inner ring temperature. The load at each speed corresponds to the minimum recommended bearing life of 200 000 h. Note that the bearing temperature is lower at "high" speeds than at low speeds. The reason is that the increase in cooling via the rotating journal is higher than the increase in heat generation in the bearing. At operating temperatures above 100 °C, it is not possible to fulfil the κ guidelines with commonly used ISO VG 220 oils.

The recommendation for this application is to improve the lubrication conditions as much as practically possible. The best remedy is to introduce efficient journal insulation in combination with circulating oil lubrication which will result in a bearing temperature of 85–90 °C (→ **example 16**, **pages 32–33**). Changing to an oil with one higher viscosity level than used for circulation systems is also beneficial.

Machine data

Paper grades	board, fine (old machines)
Roll position	dryer section
Paper speed	100–150 m/min (330–490 ft/min)

Operating conditions for the bearings

Ambient temperature	75 °C (*167 °F*)
Lubrication	oil bath
Oil viscosity	ISO VG 220–1 500
Journal insulation	none

Bearing application

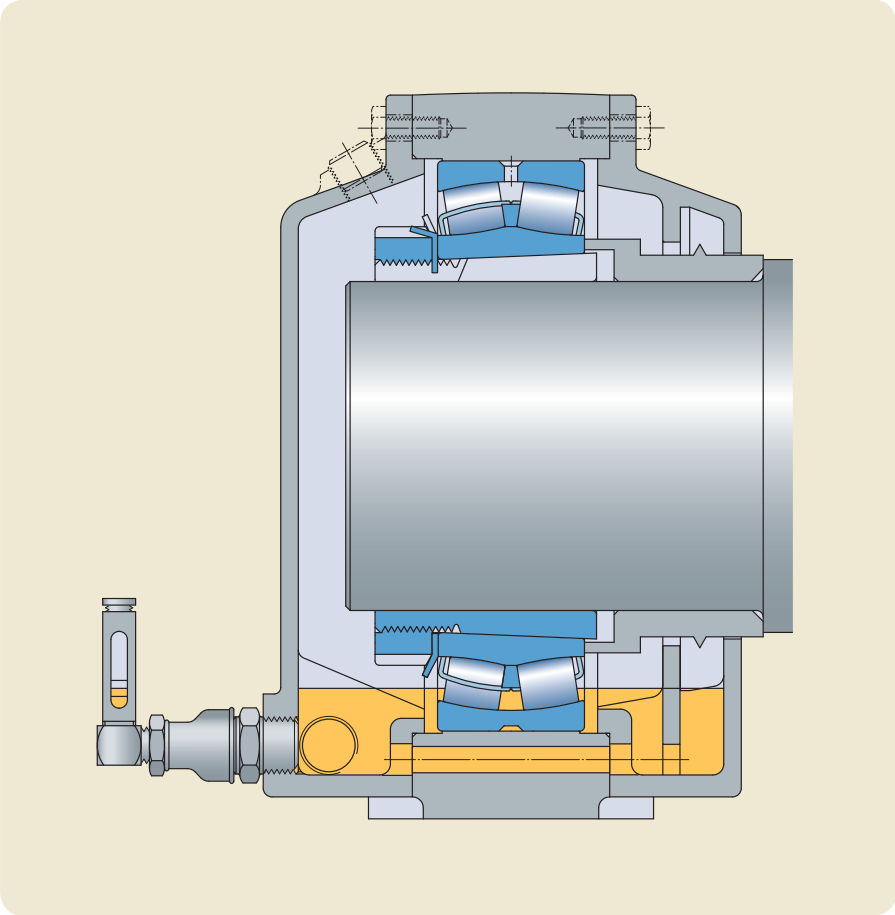

Bearing temperature/speed factor diagram

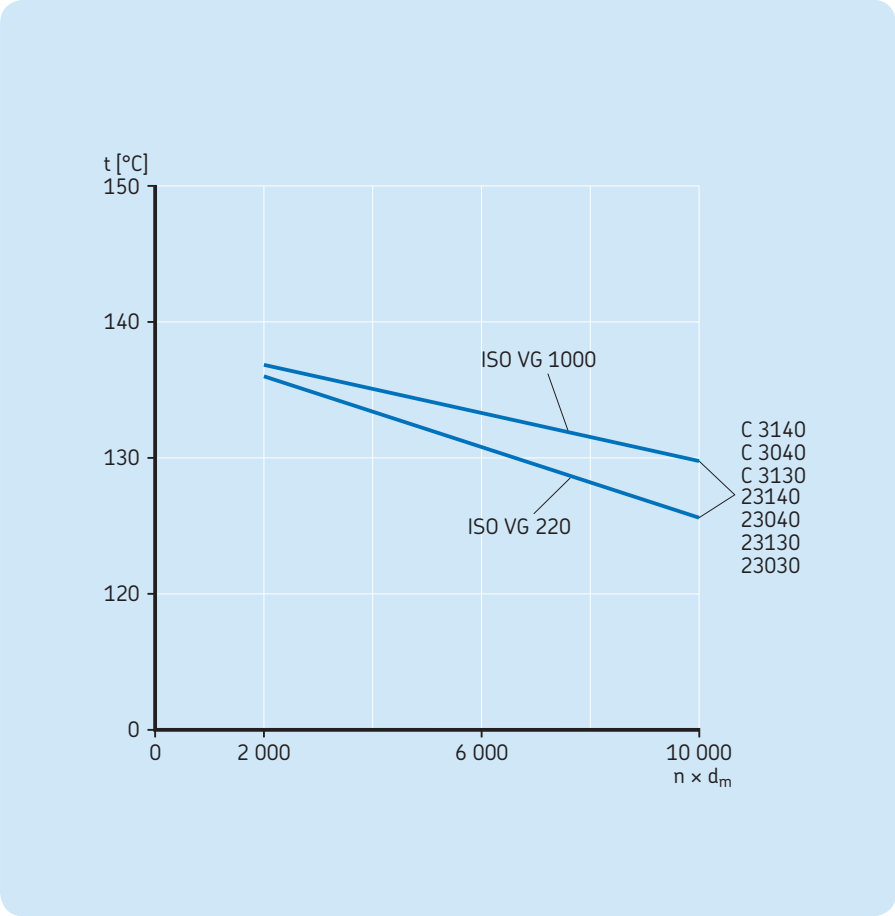

Example 15

Drying cylinder with steam temperature 140 °C *(284 °F)*

Lubrication guidelines

As drying cylinder bearings rotate at relatively low speeds and are subjected to high temperatures, there will be metallic contact between rollers and raceways. This means that there is a risk of surface distress. To avoid this risk, the circulating oil should have efficient AW additives and a viscosity ratio κ according to the guidelines in *Chapter 9*, *Maintenance*, *How to avoid surface damage*, **page 28**.

General guidelines, as outlined in *Chapter 7*, *Lubrication*, *Oil lubrication* (→ **pages 13–16**), should also be taken into account.

Comments on the diagram

Bearing temperature depends on the bearing speed, applied load and external cooling or heating of the bearing arrangement. Therefore, the calculated bearing temperatures in the diagram are valid only when the bearing application and operating conditions are similar to those shown in this example.

The calculations for this diagram have been made using an SKF computer program to obtain the inner ring temperature. The load at each speed corresponds to the minimum recommended bearing life of 200 000 h.

An oil flow of 0,5 l/min, which is common in old machines, gives a bearing temperature of around 120 °C.

At operating temperatures above 100 °C, it is not possible to fulfil the κ guidelines and some mineral oils have shown a strong tendency to carbonize. Therefore, the recommendation for such applications is to improve the lubrication conditions as much as practically possible.

The diagram shows that the influence of the oil quantity is considerable up to 2–3 l/min, but after that, scarcely anything is gained by an increased oil flow except for large size bearings at high speeds.

The best remedy is to introduce efficient journal insulation which results in a bearing temperature of about 85–90 °C (→ *example 16*, **pages 32–33**). Changing to a synthetic oil is also beneficial.

Machine data

Paper grades	fine, newsprint
Roll position	dryer section
Paper speed	700–2 000 m/min (2 300–6 550 ft/min)

Operating conditions for the bearings

Ambient temperature	100 °C *(212 °F)*
Lubrication	circulating oil
Oil viscosity	ISO VG 220
Oil inlet temperature	60 °C *(140 °F)*
Journal insulation	none

Bearing application

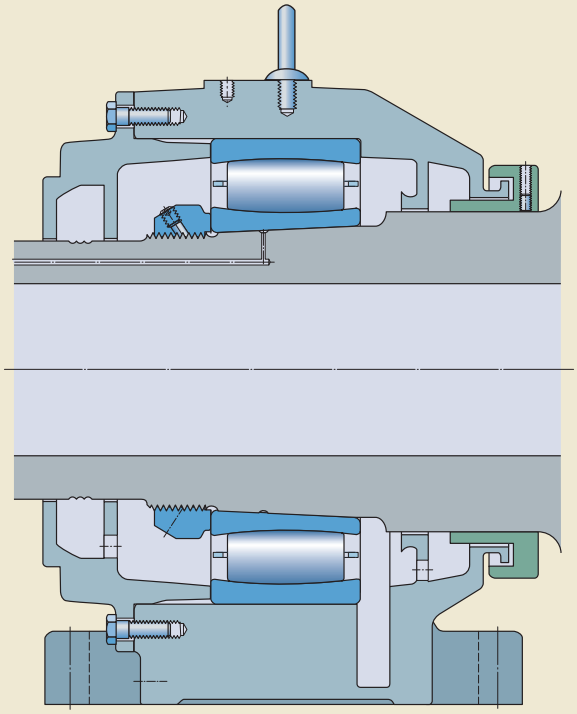

Bearing temperature/oil flow diagram

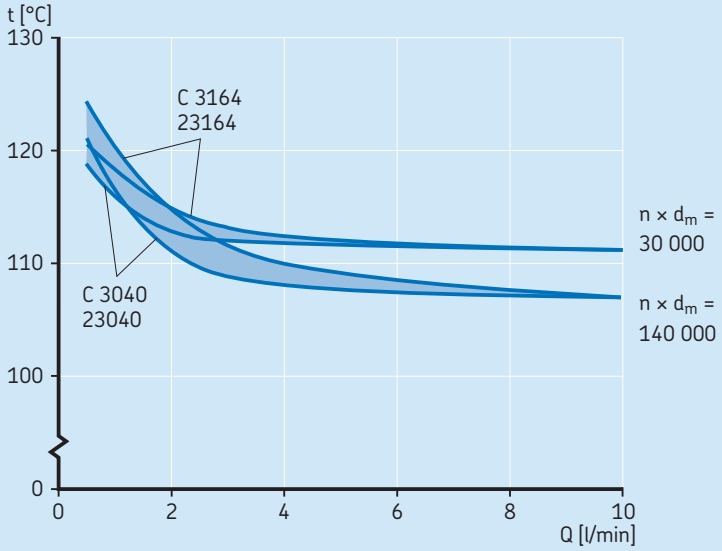

Example 16

Drying cylinder with steam temperature 140 °C *(284 °F)*

Lubrication guidelines

As drying cylinder bearings rotate at relatively low speeds and are subjected to high temperatures, there will be metallic contact between rollers and raceways. This means that there is a risk of surface distress. To avoid this risk, the circulating oil should have efficient AW additives and a viscosity ratio κ according to the guidelines in *Chapter 9*, *Maintenance*, *How to avoid surface damage*, **page 28**.

General guidelines, as outlined in *Chapter 7*, *Lubrication*, *Oil lubrication* (**→ pages 13–16**), should also be taken into account.

Comments on the diagram

Bearing temperature depends on the bearing speed, applied load and external cooling or heating of the bearing arrangement. Therefore, the calculated bearing temperatures in the diagram are valid only when the bearing application and operating conditions are similar to those shown in this example.

The calculations for this diagram have been made using an SKF computer program to obtain the inner ring temperature. The load at each speed corresponds to the minimum recommended bearing life of 200 000 h.

An oil flow of 0,5 l/min was common in the early machines with insulated journals. Such an oil flow gives a bearing temperature of around 90 °C at low speeds and around 100 °C at high speeds.

The aim for this application is to find the optimum oil flow which gives a bearing temperature somewhat below 90 °C.

The diagram shows that the influence of the oil quantity is considerable up to 2–3 l/min, but after that, scarcely anything is gained by an increased oil flow except for large size bearings at high speeds.

If an ISO VG 320 oil is used instead of an ISO VG 220 one, the bearing temperature will increase a little. However, the use of an ISO VG 320 oil would be beneficial because the viscosity ratio κ would be higher than when using an ISO VG 220 oil.

Machine data

Paper grades	fine, newsprint
Roll position	dryer section
Paper speed	700–2 000 m/min (2 300–6 550 ft/min)

Operating conditions for the bearings

Ambient temperature	100 °C *(212 °F)*
Lubrication	circulating oil
Oil viscosity	ISO VG 220
Oil inlet temperature	60 °C *(140 °F)*
Journal insulation	yes

Bearing application

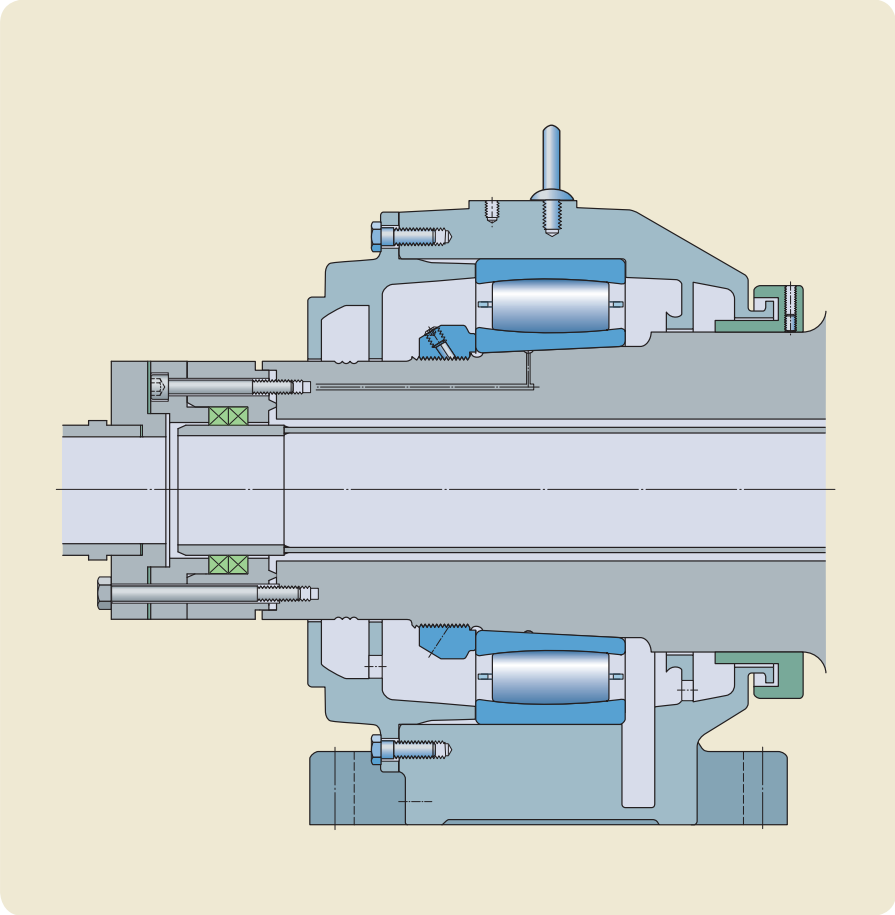

Bearing temperature/oil flow diagram

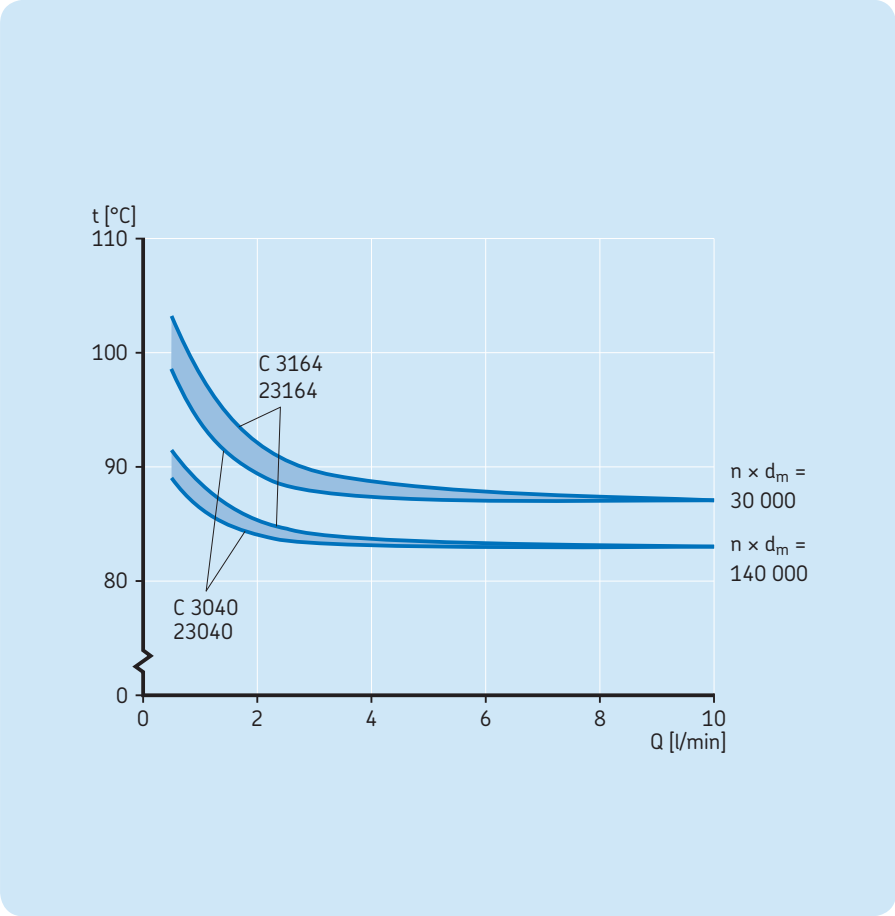

Example 17

Drying cylinder with steam temperature 165 °C (*329 °F*)

Lubrication guidelines

As drying cylinder bearings rotate at relatively low speeds and are subjected to high temperatures, there will be metallic contact between rollers and raceways. This means that there is a risk of surface distress. To avoid this risk, the circulating oil should have efficient AW additives and a viscosity ratio κ according to the guidelines in *Chapter 9*, *Maintenance*, *How to avoid surface damage*, **page 28**.

General guidelines, as outlined in *Chapter 7*, *Lubrication*, *Oil lubrication* (→ **pages 13–16**), should also be taken into account.

Comments on the diagram

Bearing temperature depends on the bearing speed, applied load and external cooling or heating of the bearing arrangement. Therefore, the calculated bearing temperatures in the diagram are valid only when the bearing application and operating conditions are similar to those shown in this example.

The calculations for this diagram have been made using an SKF computer program to obtain the inner ring temperature. The load at each speed corresponds to the minimum recommended bearing life of 200 000 h.

An oil flow of 0,5 l/min, which is common in old machines, gives a bearing temperature of around 135 °C.

At operating temperatures above 100 °C, it is not possible to fulfil the κ guidelines and some mineral oils have shown a strong tendency to carbonize. Therefore, the recommendation for such applications is to improve the lubrication conditions as much as practically possible.

The diagram shows that the influence of the oil quantity is considerable up to 3 l/min, but after that, scarcely anything is gained by an increased oil flow except for large size bearings at high speeds.

The best remedy is to introduce efficient journal insulation which gives a bearing temperature of about 90 °C (→ *example 18*, **pages 36–37**). Changing to a synthetic oil is also beneficial.

Machine data

Paper grades	board, liner, fine
Roll position	dryer section
Paper speed	400–1 200 m/min (1 320–3 940 ft/min)

Operating conditions for the bearings

Ambient temperature	100 °C (*212 °F*)
Lubrication	circulating oil
Oil viscosity	ISO VG 220
Oil inlet temperature	60 °C (*140 °F*)
Journal insulation	none

Bearing application

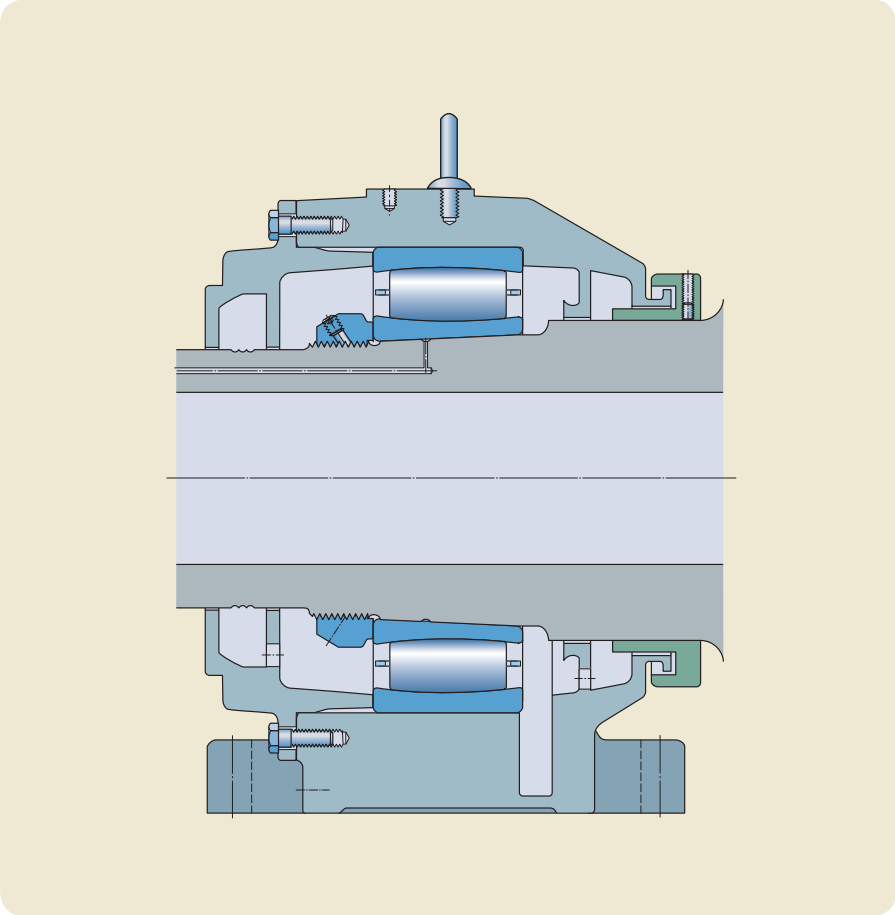

Bearing temperature/oil flow diagram

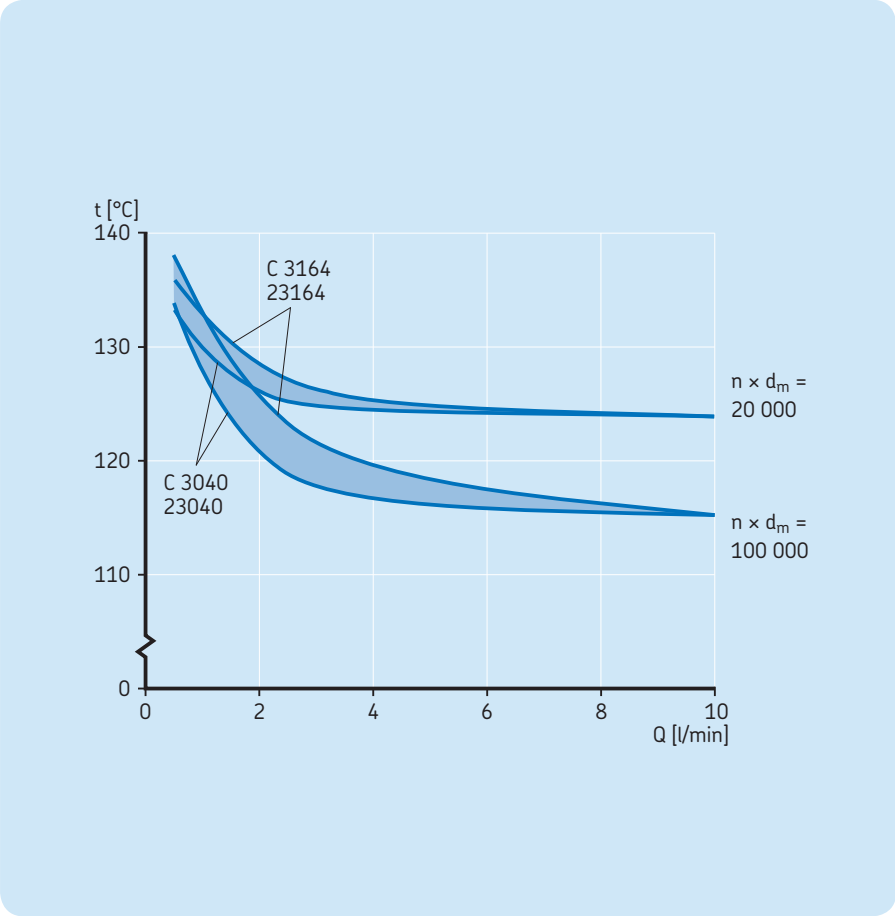

Example 18

Drying cylinder with steam temperature 165 °C *(329 °F)*

Lubrication guidelines

As drying cylinder bearings rotate at relatively low speeds and are subjected to high temperatures, there will be metallic contact between rollers and raceways. This means that there is a risk of surface distress. To avoid this risk, the circulating oil should have efficient AW additives and a viscosity ratio κ according to the guidelines in *Chapter 9*, *Maintenance*, *How to avoid surface damage*, **page 28**.

General guidelines, as outlined in *Chapter 7*, *Lubrication*, *Oil lubrication* (**→ pages 13–16**), should also be taken into account.

Comments on the diagram

Bearing temperature depends on the bearing speed, applied load and external cooling or heating of the bearing arrangement. Therefore, the calculated bearing temperatures in the diagram are valid only when the bearing application and operating conditions are similar to those shown on this page.

The calculations for this diagram have been made using an SKF computer program to obtain the inner ring temperature. The load at each speed corresponds to the minimum recommended bearing life of 200 000 h.

An oil flow of 0,5 l/min was common in the early machines with insulated journals. Such an oil flow gives a bearing temperature of around 100 °C.

The aim for this application is to find the optimum oil flow which gives a bearing temperature of around 90 °C. The diagram shows that the influence of the oil quantity is considerable up to 2–3 l/min, but after that, scarcely anything is gained by an increased oil flow except for large size bearings at high speeds.

If an ISO VG 320 oil is used instead, the bearing temperature will increase a little, but because the viscosity ratio κ will be higher than when using an ISO VG 220 oil, its use will be beneficial.

Machine data

Paper grades	board, liner, fine
Roll position	dryer section
Paper speed	400–1 200 m/min (1 320–3 940 ft/min)

Operating conditions for the bearings

Ambient temperature	100 °C *(212 °F)*
Lubrication	circulating oil
Oil viscosity	ISO VG 220
Oil inlet temperature	60 °C *(140 °F)*
Journal insulation	yes

Bearing application

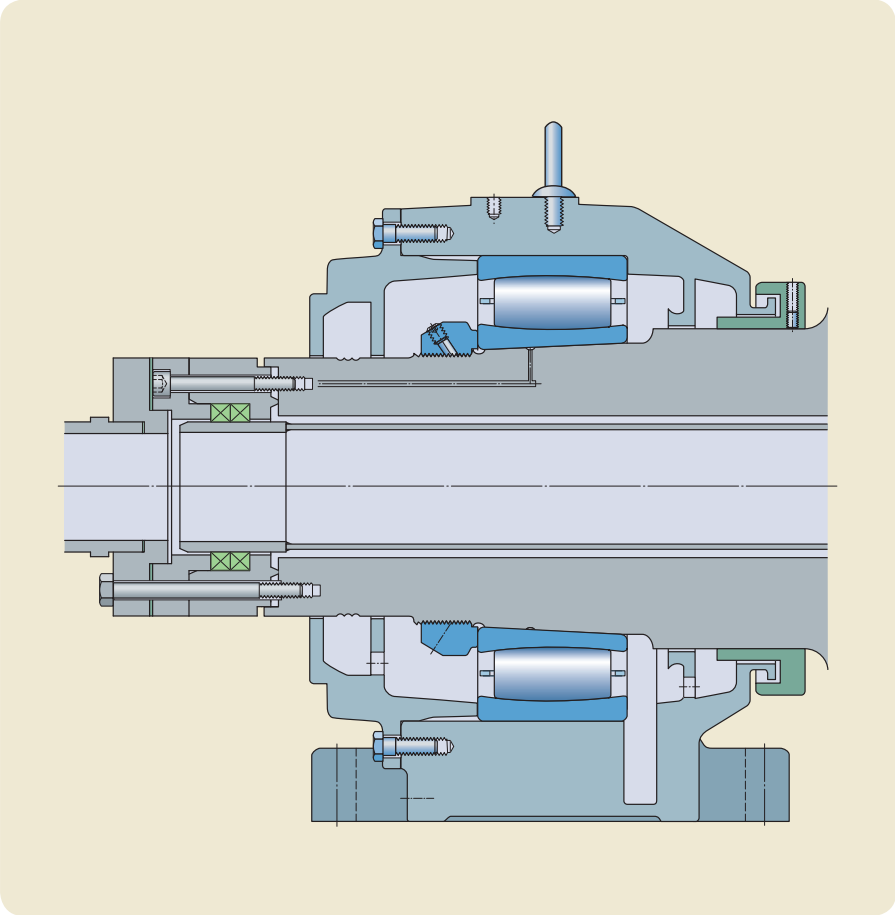

Bearing temperature/oil flow diagram

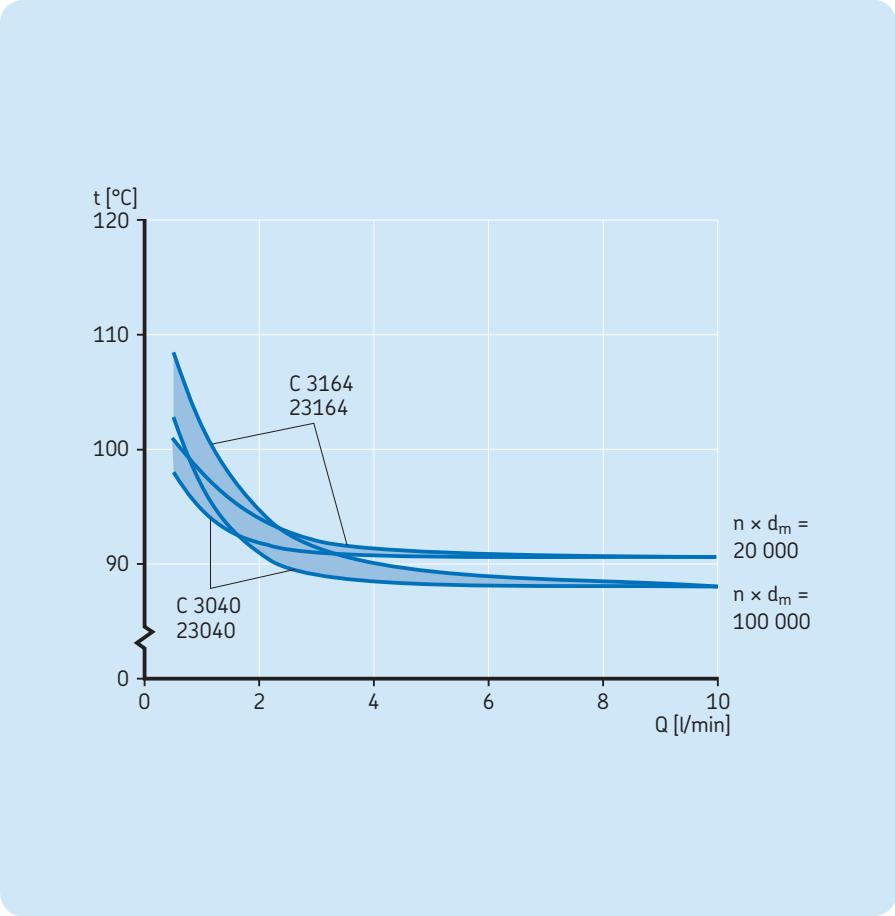

Example 19

Drying cylinder with steam temperature 190 °C (*374 °F*)

Lubrication guidelines

As drying cylinder bearings rotate at relatively low speeds and are subjected to high temperatures, there will be metallic contact between rollers and raceways. This means that there is a risk of surface distress. To avoid this risk, the circulating oil should have efficient AW additives and a viscosity ratio κ according to the guidelines in *Chapter 9*, *Maintenance*, *How to avoid surface damage*, **page 28**.

General guidelines, as outlined in *Chapter 7*, *Lubrication*, *Oil lubrication* (→ **pages 13–16**), should also be taken into account.

Comments on the diagram

Bearing temperature depends on the bearing speed, applied load and external cooling or heating of the bearing arrangement. Therefore, the calculated bearing temperatures in the diagram are valid only when the bearing application and operating conditions are similar to those shown in this example.

The calculations for this diagram have been made using an SKF computer program to obtain the inner ring temperature. The load at each speed corresponds to the minimum recommended bearing life of 200 000 h.

An oil flow of 0,5 l/min, which is common in old machines, gives a bearing temperature of around 155 °C.

At operating temperatures above 100 °C, it is not possible to fulfil the κ guidelines and some mineral oils have shown a strong tendency to carbonize. Therefore, the recommendation for such applications is to improve the lubrication conditions as much as practically possible.

The diagram shows that the influence of the oil quantity is considerable up to 4 l/min, but after that scarcely anything is gained by an increased oil flow except for large size bearings at high speeds.

The best remedy is to introduce efficient journal insulation which gives a bearing temperature of about 95–100 °C (→ *example 20*, **pages 40–41**). Changing to a synthetic oil is also beneficial.

Machine data

Paper grades	board, liner
Roll position	dryer section
Paper speed	400–1 300 m/min (1 320–4 270 ft/min)

Operating conditions for the bearings

Ambient temperature	100 °C (*212 °F*)
Lubrication	circulating oil
Oil viscosity	ISO VG 220
Oil inlet temperature	60 °C (*140 °F*)
Journal insulation	none

Bearing application

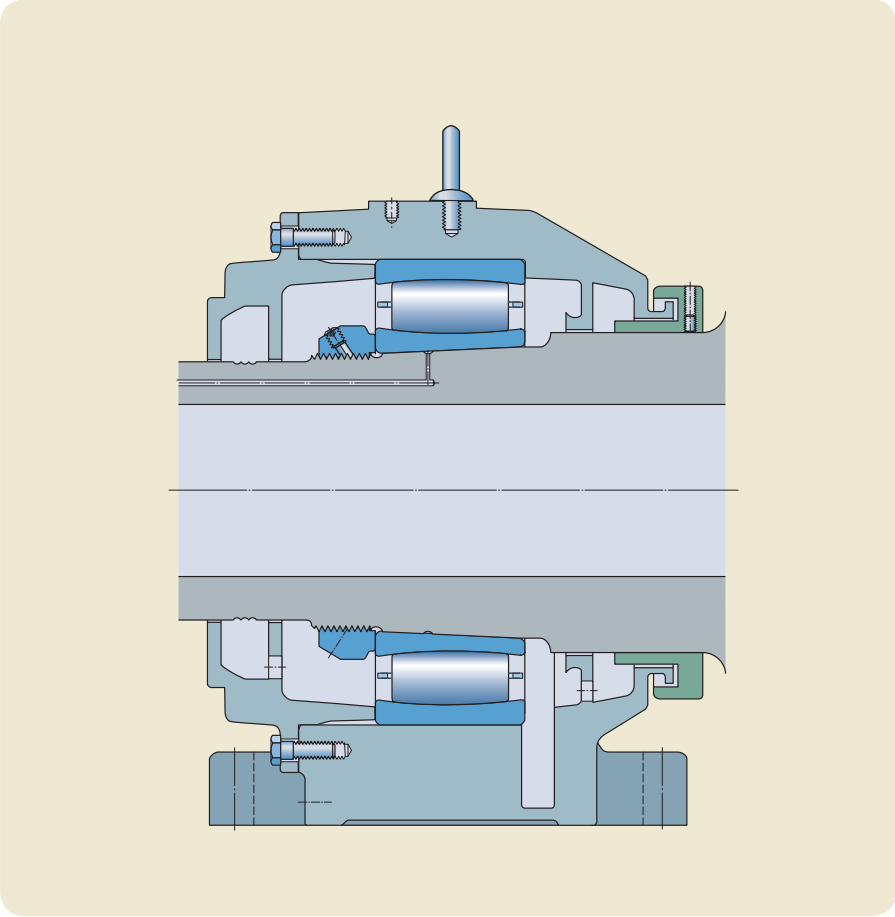

Bearing temperature/oil flow diagram

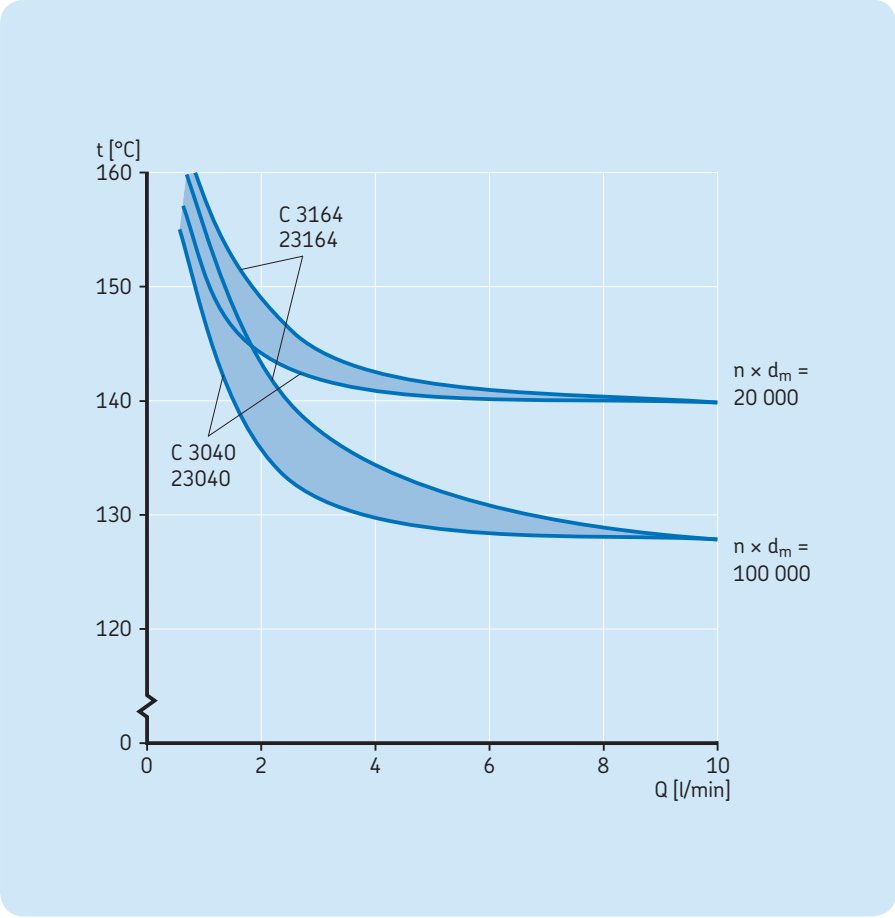

Example 20

Drying cylinder with steam temperature 190 °C (*374 °F*)

Lubrication guidelines

As drying cylinder bearings rotate at relatively low speeds and are subjected to high temperatures, there will be metallic contact between rollers and raceways. This means that there is a risk of surface distress. To avoid this risk, the circulating oil should have efficient AW additives and a viscosity ratio κ according to the guidelines in *Chapter 9*, *Maintenance*, *How to avoid surface damage*, **page 28**.

General guidelines, as outlined in *Chapter 7*, *Lubrication*, *Oil lubrication* (→ **pages 13–16**), should also be taken into account.

Comments on the diagram

Bearing temperature depends on the bearing speed, applied load and external cooling or heating of the bearing arrangement. Therefore, the calculated bearing temperatures in the diagram are valid only when the bearing application and operating conditions are similar to those shown in this example. The calculations for this diagram have been made using an SKF computer program to obtain the inner ring temperature.

The load at each speed corresponds to the minimum recommended bearing life of 200 000 h.

An oil flow of 0,5 l/min was common in the early machines with insulated journals. Such an oil flow gives a bearing temperature of around 115 °C. The aim for this application is to find the optimum oil flow which gives a bearing temperature of around 95–100 °C.

The diagram shows that the influence of the oil quantity is considerable up to 3–4 l/min, but after that, scarcely anything is gained by an increased oil flow except for large size bearings at high speeds.

If an ISO VG 320 oil is used instead, the bearing temperature will increase a little, but because the viscosity ratio κ would be higher than when using an ISO VG 220 oil, its use will be beneficial.

Machine data

Paper grades	board, liner
Roll position	dryer section
Paper speed	400–1 300 m/min (1 320–4 270 ft/min)

Operating conditions for the bearings

Ambient temperature	100 °C (*212 °F*)
Lubrication	circulating oil
Oil viscosity	ISO VG 220
Oil inlet temperature	60 °C (*140 °F*)
Journal insulation	yes

Bearing application

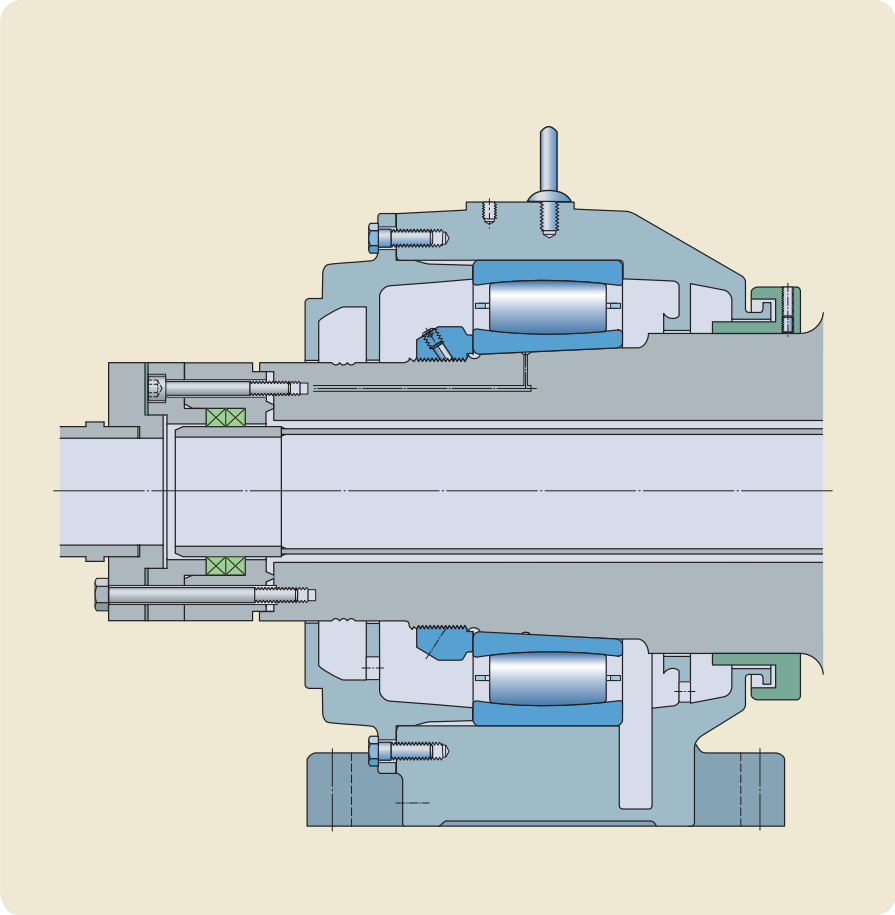

Bearing temperature/oil flow diagram

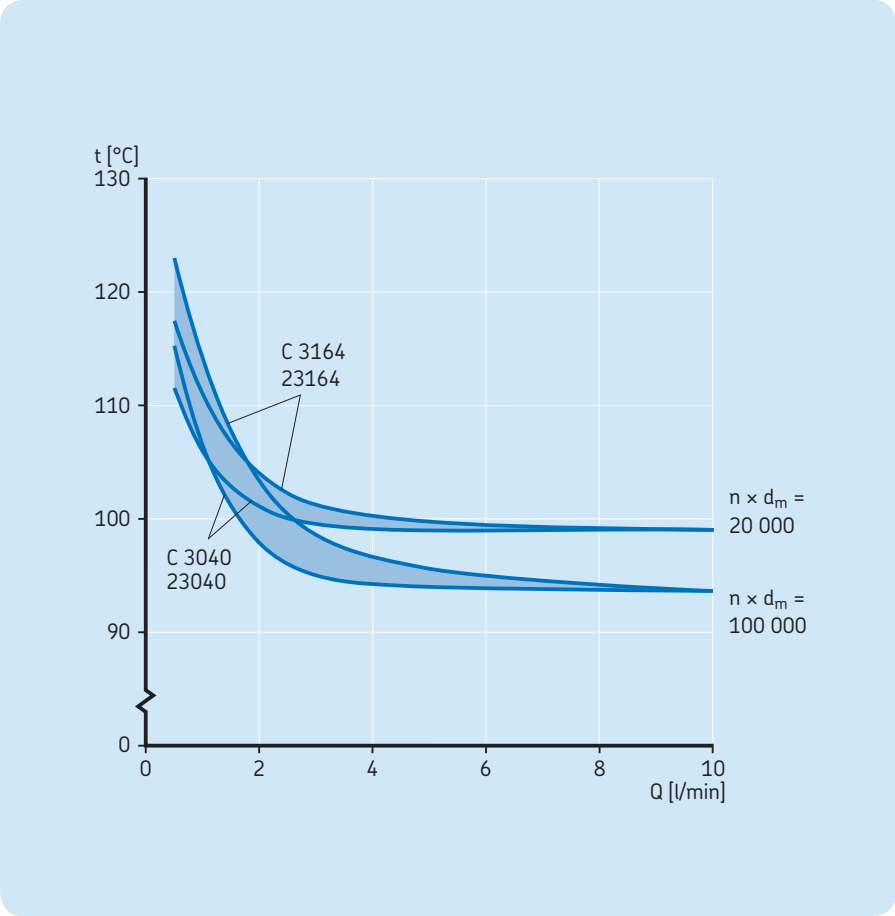

Example 21

Yankee suction press roll (oil)

Lubrication guidelines

As suction roll bearings are large and sometimes rotate at very high speeds, there is a risk of smearing. To avoid smearing, the oil should have EP additives and the viscosity ratio κ should be according to the guidelines in *Chapter 9*, *Maintenance*, *How to avoid surface damage*, **page 28**.

General guidelines, as outlined in *Chapter 7*, *Lubrication*, *Oil lubrication* (→ **pages 13–16**), should also be taken into account.

Comments on the diagram

Bearing temperature depends on the bearing speed, applied load and external cooling or heating of the bearing arrangement. Heat transfer from the housing, shaft and the foundation is largely dependent on the bearing application and operating conditions. Therefore, the oil flow in the diagram is valid only when the bearing application and operating conditions are similar to those shown in this example.

The calculations for this diagram have been made using an SKF computer program to obtain the outer ring temperature. The load at each speed corresponds to the minimum recommended bearing life of 120 000 h.

The oil flow in the diagram is based on the use of an ISO VG 220 oil and selected to fulfil two criteria: the κ guidelines and a bearing operating temperature of 75 °C. If an oil with lower viscosity than ISO VG 220 is used for these bearings, then the oil flows must be increased. A thicker oil, e.g. ISO VG 320, is advantageous and will improve the lubrication conditions, but the bearing temperature will increase a little.

Note that the diagram shows minimum acceptable oil flow. Slightly higher oil flow values are acceptable and beneficial in most cases.

Machine data

Paper grades	board, tissue
Roll position	dryer section
Paper speed	400–2 200 m/min (1 320–7 220 ft/min)

Operating conditions for the bearings

Ambient temperature	45 °C *(113 °F)*
Lubrication	circulating oil
Oil viscosity	ISO VG 220
Oil inlet temperature	45 °C *(113 °F)*

Bearing application

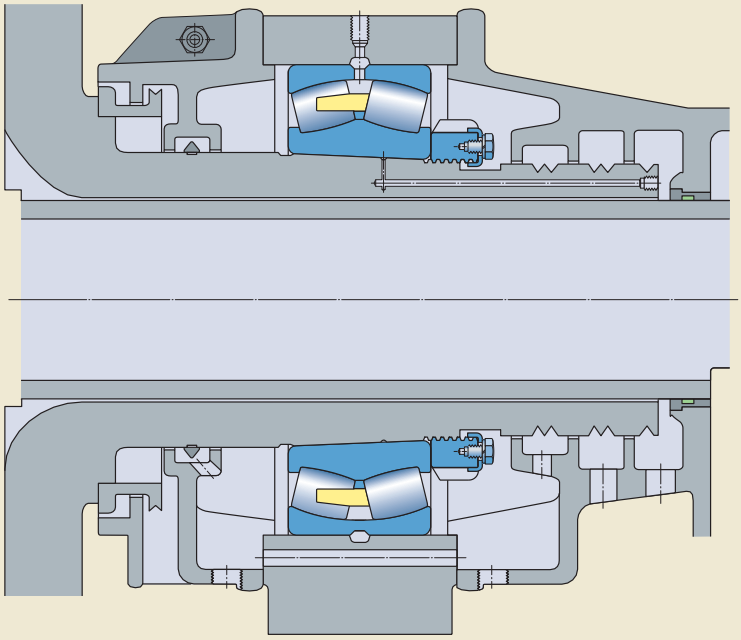

Oil flows for bearing temperatures 75 °C (167 °F)

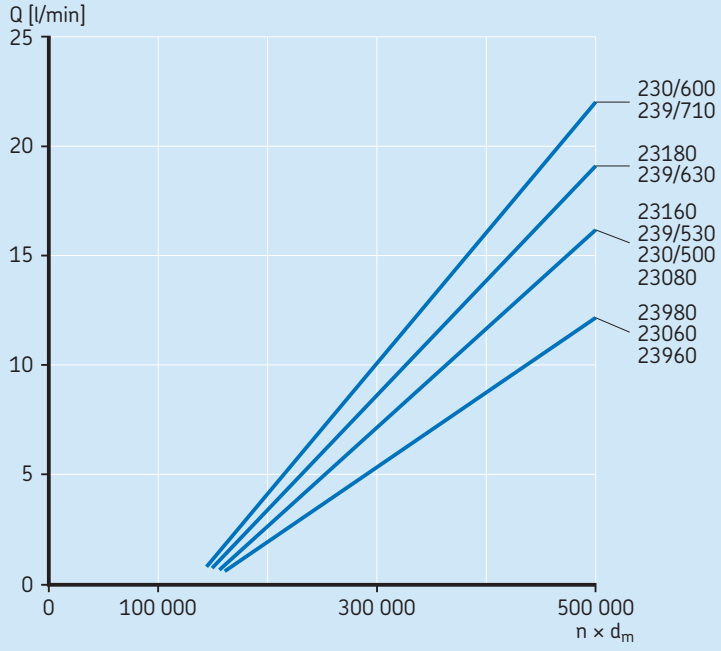

Example 22

Yankee cylinder with steam temperature 140 °C *(284 °F)* (oil bath)

Lubrication guidelines

As Yankee cylinder bearings in this example rotate at very low speeds and are subjected to high temperatures, there will be metallic contact between rollers and raceways. This means that there is a risk of surface distress. To avoid this risk, the lubricating oil should have efficient AW additives and a viscosity ratio κ according to the guidelines in *Chapter 9*, *Maintenance*, *How to avoid surface damage*, **page 28**.

A synthetic oil is recommended, because mineral oils are not suitable at temperatures above 120 °C.

General guidelines, as outlined in *Chapter 7*, *Lubrication*, *Oil lubrication* (→ **pages 13–16**), should also be taken into account.

Comments on the diagram

Bearing temperature depends on the bearing speed, applied load and external cooling or heating of the bearing arrangement. Therefore, the calculated bearing temperatures in the diagram are valid only when the bearing application and operating conditions are similar to those shown in this example.

The calculations for this diagram have been made using an SKF computer program to obtain the inner ring temperature. The load at each speed corresponds to the minimum recommended bearing life of 200 000 h. Note that the bearing temperature is lower at "high" speeds than at low speeds. The reason is that the increase in cooling via the rotating journal is higher than the increase in heat generation in the bearing.

At operating temperatures above 100 °C, it is not possible to fulfil the κ guidelines with commonly used ISO VG 220 oils.

The recommendation for this application is to improve the lubrication conditions as much as practically possible. The best remedy is to introduce an efficient journal insulation in combination with circulating oil lubrication. This results in a bearing temperature of 85 °C (→ *example 24*, **pages 48–49**). Changing to an oil with higher viscosity than used for circulation systems is also beneficial.

Machine data

Paper grades	board (old machines)
Roll position	dryer section
Paper speed	100–150 m/min (330–490 ft/min)

Operating conditions for the bearings

Ambient temperature	60 °C *(140 °F)*
Lubrication	oil bath
Oil viscosity	ISO VG 220–1 500
Journal insulation	none

Bearing application

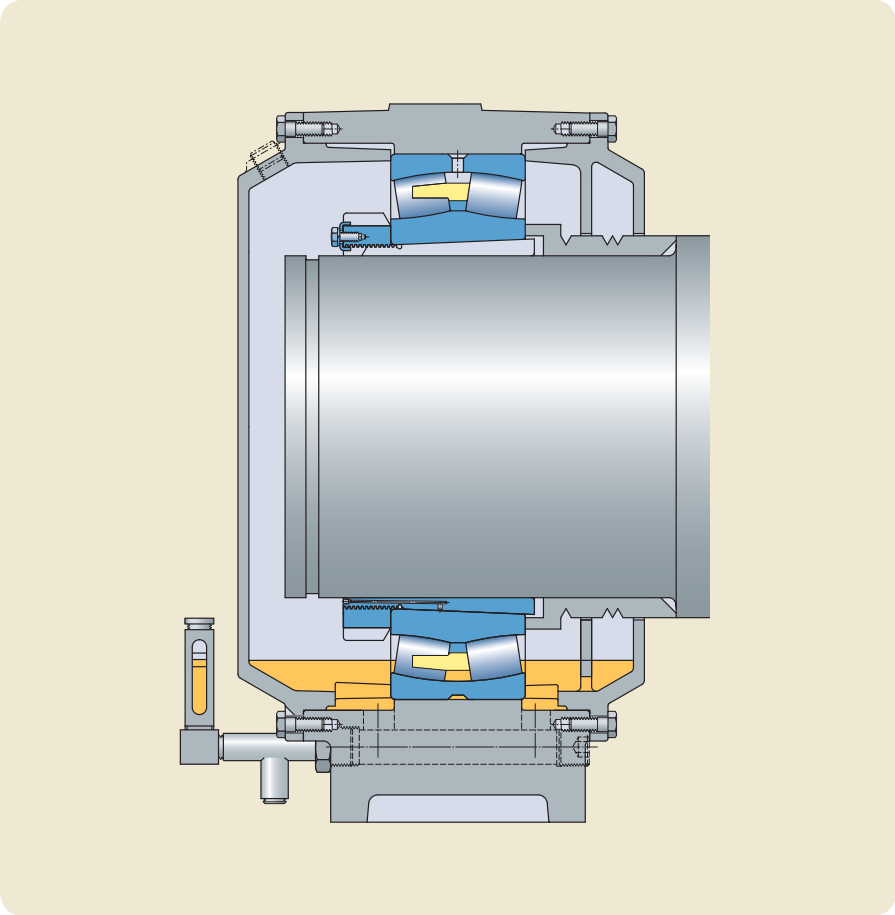

Bearing temperature/speed factor diagram

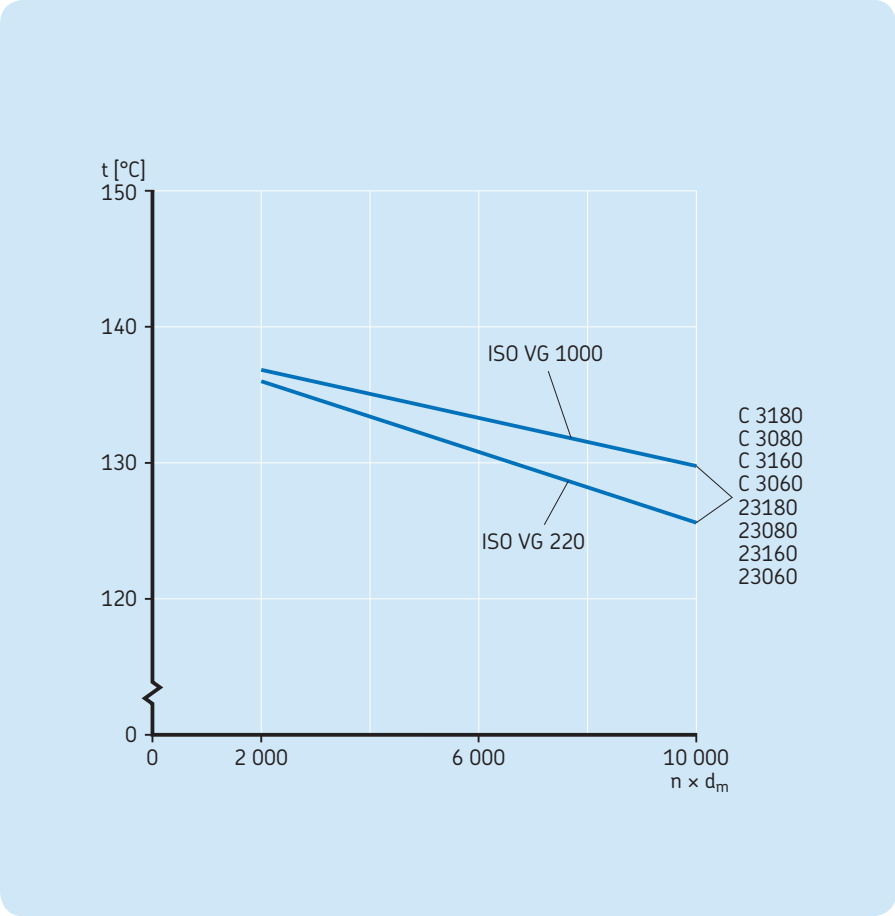

Example 23

Yankee cylinder with steam temperature 140 °C *(284 °F)*

Lubrication guidelines

As Yankee cylinder bearings rotate at low speeds and are subjected to high temperatures there will be metallic contact between rollers and raceways. This means that there is a risk of surface distress. To avoid this risk, the circulating oil should have efficient AW additives and a viscosity ratio κ according to the guidelines in *Chapter 9*, *Maintenance*, *How to avoid surface damage*, **page 28**.

General guidelines, as outlined in *Chapter 7*, *Lubrication*, *Oil lubrication* (→ **pages 13–16**), should also be taken into account.

Comments on the diagram

Bearing temperature depends on the bearing speed, applied load and external cooling or heating of the bearing arrangement. Therefore, the calculated bearing temperatures in the diagram are valid only when the bearing application and operating conditions are similar to those shown in this example.

The calculations for this diagram are made at SKF with a computer program that indicates the inner ring temperature. The load at each speed corresponds to the minimum recommended bearing life of 200 000 h.

The bearing operating temperature will be above 110 °C also at very high oil flows. At operating temperatures above 100 °C, it is not possible to fulfil the κ guidelines and some mineral oils have shown a strong tendency to carbonize. Therefore the recommendation for such applications is to improve the lubrication conditions as much as practically possible.

The diagram shows that the influence of the oil quantity is considerable up to 4–5 l/min, but after that, scarcely anything is gained by an increased oil flow except for large size bearings at high speeds.

The best remedy is to introduce efficient journal insulation which results in a bearing temperature of about 80–85 °C (→ *example 24*, **pages 48–49**). Changing to a synthetic oil is also beneficial.

Machine data

Paper grades	board, tissue
Roll position	dryer section
Paper speed	100–1 000 m/min (330–3 300 ft/min)

Operating conditions for the bearings

Ambient temperature	60 °C *(140 °F)*
Lubrication	circulating oil
Oil viscosity	ISO VG 320 or 460
Oil inlet temperature	45 °C *(113 °F)*
Journal insulation	none

Bearing application

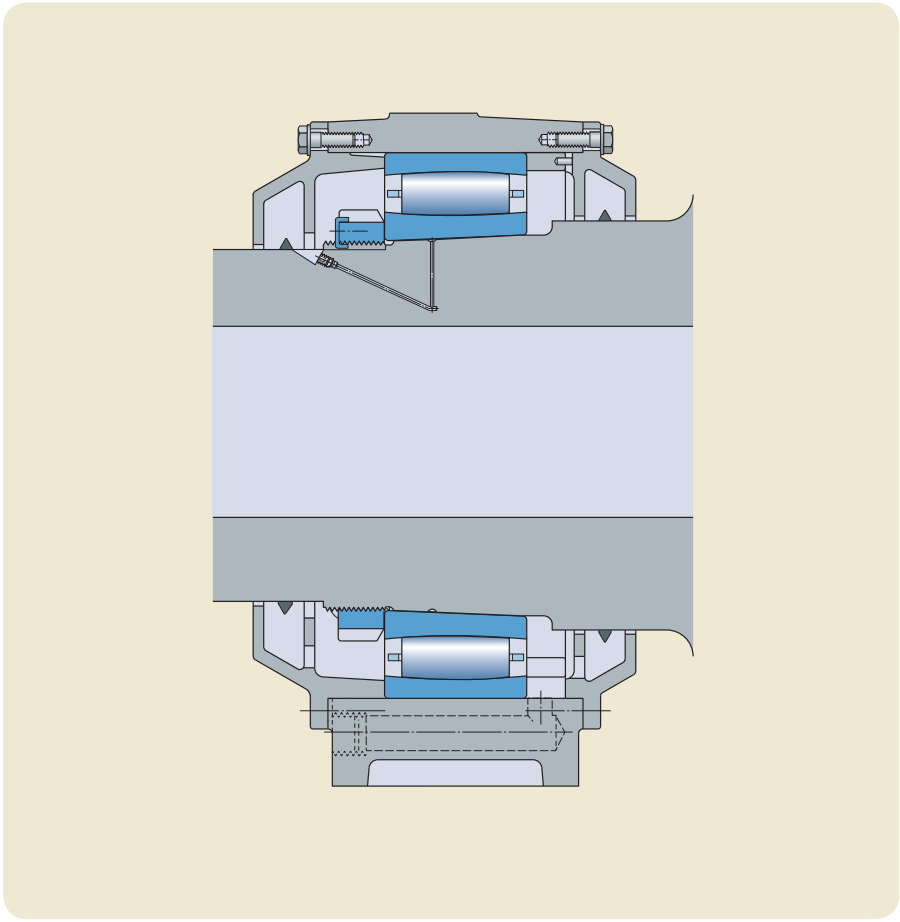

Bearing temperature/oil flow diagram

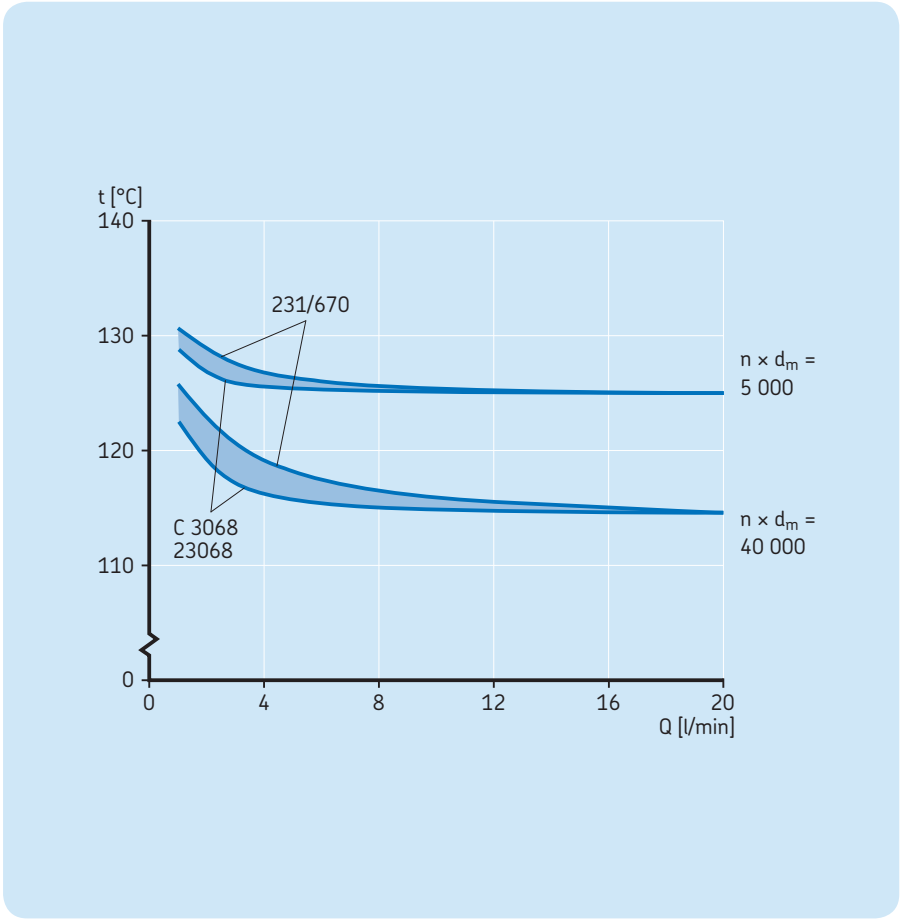

Example 24

Yankee cylinder with steam temperature 140 °C *(284 °F)*

Lubrication guidelines

As Yankee cylinder bearings rotate at relatively low speeds and are subjected to high temperatures, there will be metallic contact between rollers and raceways. This means that there is a risk of surface distress. To avoid this the circulating oil should have efficient AW additives and a viscosity ratio κ according to the guidelines in *Chapter 9*, *Maintenance*, *How to avoid surface damage*, **page 28**.

General guidelines, as outlined in *Chapter 7*, *Lubrication*, *Oil lubrication* (**→ pages 13–16**), should also be taken into account.

Comments on the diagram

Bearing temperature depends on the bearing speed, applied load and external cooling or heating of the bearing arrangement. Therefore, the calculated bearing temperatures in the diagram are valid only when the bearing application and operating conditions are similar to those shown in this example.

The calculations for this diagram have been made using an SKF computer program to obtain the inner ring temperature. The load at each speed corresponds to the minimum recommended bearing life of 200 000 h.

An oil flow of 1–2 l/min was sometimes used in the early machines with insulated journals. Such an oil flow gives a bearing temperature of around 90 °C.

The aim for this application is to find the optimum oil flow which gives a bearing temperature of around 80–85 °C.

The diagram shows that the influence of the oil quantity is considerable up to 4–6 l/min, but after that, scarcely anything is gained by an increased oil flow except for large size bearings at high speeds.

Machine data

Paper grades	board, tissue
Roll position	dryer section
Paper speed	400–1 000 m/min (1 320–3 300 ft/min)

Operating conditions for the bearings

Ambient temperature	60 °C *(140 °F)*
Lubrication	circulating oil
Oil viscosity	ISO VG 320 or 460
Oil inlet temperature	45 °C *(113 °F)*
Journal insulation	yes

Bearing application

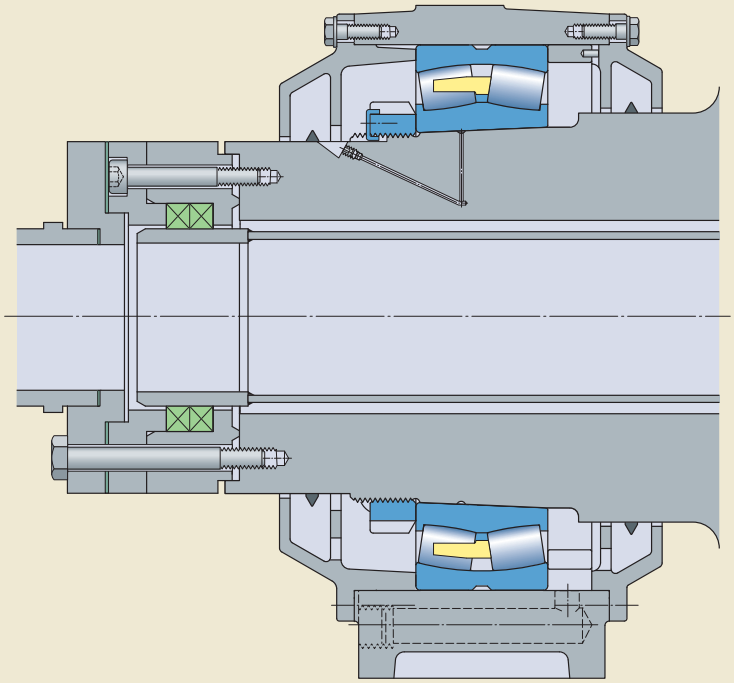

Bearing temperature/oil flow diagram

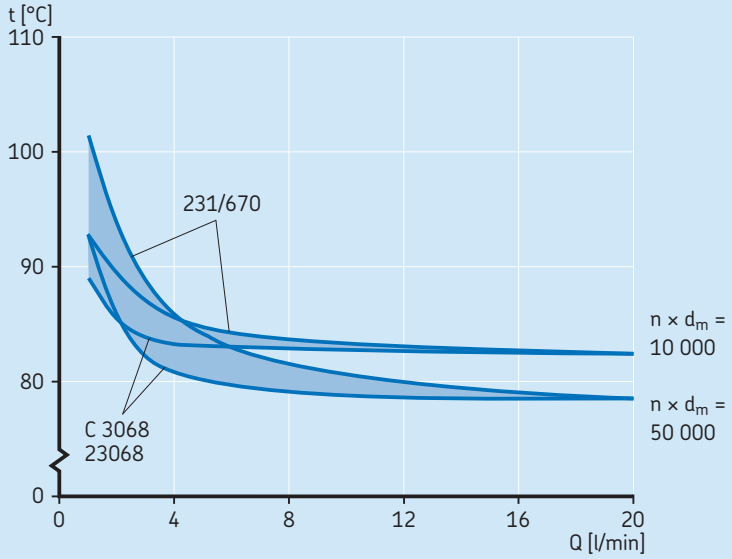

Example 25

Yankee cylinder with steam temperature 165 °C (*329 °F*)

Lubrication guidelines

As Yankee cylinder bearings rotate at relatively low speeds and are subjected to high temperatures, there will be metallic contact between rollers and raceways. This means that there is a risk of surface distress. To avoid this risk, the circulating oil should have efficient AW additives and a viscosity ratio κ according to the guidelines in *Chapter 9*, *Maintenance*, *How to avoid surface damage*, **page 28**.

General guidelines, as outlined in *Chapter 7*, *Lubrication*, *Oil lubrication* (→ **pages 13–16**), should also be taken into account.

Comments on the diagram

Bearing temperature depends on the bearing speed, applied load and external cooling or heating of the bearing arrangement. Therefore, the calculated bearing temperatures in the diagram are valid only when the bearing application and operating conditions are similar to those shown in this example.

The calculations for this diagram have been made using an SKF computer program to obtain the inner ring temperature. The load at each speed corresponds to the minimum recommended bearing life of 200 000 h.

An oil flow of 2 l/min, which is sometimes used for old machines, gives a bearing temperature of around 135 °C.

At operating temperatures above 100 °C, it is not possible to fulfil the κ guidelines and some mineral oils have shown a strong tendency to carbonize. Therefore, the recommendation for such applications is to improve the lubrication conditions as much as practically possible.

The diagram shows that the influence of the oil quantity is considerable up to 5–7 l/min, but after that, scarcely anything is gained by an increased oil flow except for large size bearings at high speeds.

The best remedy is to introduce efficient journal insulation which results in a bearing temperature of about 90 °C (→ *example 26*, **pages 52-53**). Changing to a synthetic oil is also beneficial.

Machine data

Paper grades	tissue, board
Roll position	dryer section
Paper speed	400–1 500 m/min (1 320–4 920 ft/min)

Operating conditions for the bearings

Ambient temperature	60 °C (*140 °F*)
Lubrication	circulating oil
Oil viscosity	ISO VG 320 or 460
Oil inlet temperature	45 °C (*113 °F*)
Journal insulation	none

Bearing application

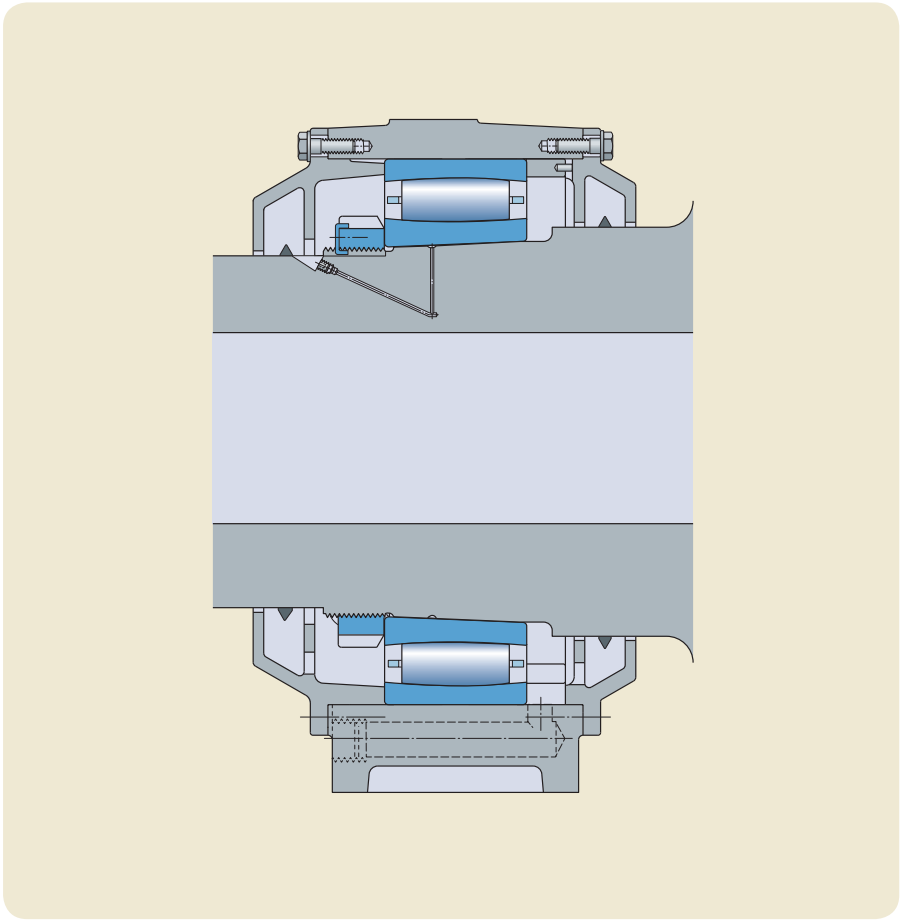

Bearing temperature/oil flow diagram

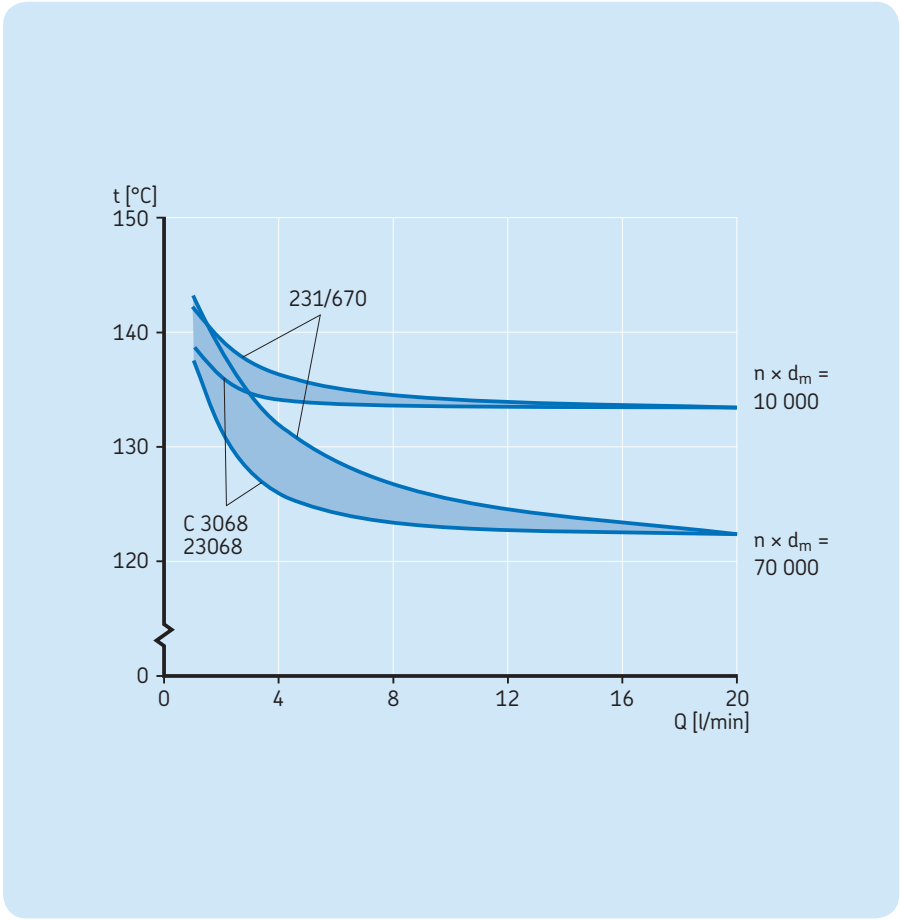

Example 26

Yankee cylinder with steam temperature 165 °C (*329 °F*)

Lubrication guidelines

As Yankee cylinder bearings rotate at relatively low speeds and are subjected to high temperatures, there will be metallic contact between rollers and raceways. This means that there is a risk of surface distress. To avoid this risk, the circulating oil should have efficient AW additives and a viscosity ratio κ according to the guidelines in *Chapter 9*, *Maintenance*, *How to avoid surface damage*, **page 28**.

General guidelines, as outlined in *Chapter 7*, *Lubrication*, *Oil lubrication* (**→ pages 13–16**), should also be taken into account.

Comments on the diagram

Bearing temperature depends on the bearing speed, applied load and external cooling or heating of the bearing arrangement. Therefore, the calculated bearing temperatures in the diagram are valid only when the bearing application and operating conditions are similar to those shown in this example.

The calculations for this diagram have been made using an SKF computer program to obtain the inner ring temperature. The load at each speed corresponds to the minimum recommended bearing life of 200 000 h.

An oil flow of 2 l/min was sometimes used in the early machines with insulated journals. Such an oil flow gives a bearing temperature of around 100 °C. If the bearing operating temperature is above 100 °C, it is impossible to fulfil the κ guidelines. The aim for this application is to find the optimum oil flow which gives a bearing temperature below 90 °C.

The diagram shows that the influence of the oil quantity is considerable up to 5–7 l/min, but after that, scarcely anything is gained by an increased oil flow except for large size bearings at high speeds.

Machine data

Paper grades	tissue, board
Roll position	dryer section
Paper speed	400–2 200 m/min (1 320–7 220 ft/min)

Operating conditions for the bearings

Ambient temperature	60 °C (*140 °F*)
Lubrication	circulating oil
Oil viscosity	ISO VG 320 or 460
Oil inlet temperature	45 °C (*113 °F*)
Journal insulation	yes

Bearing application

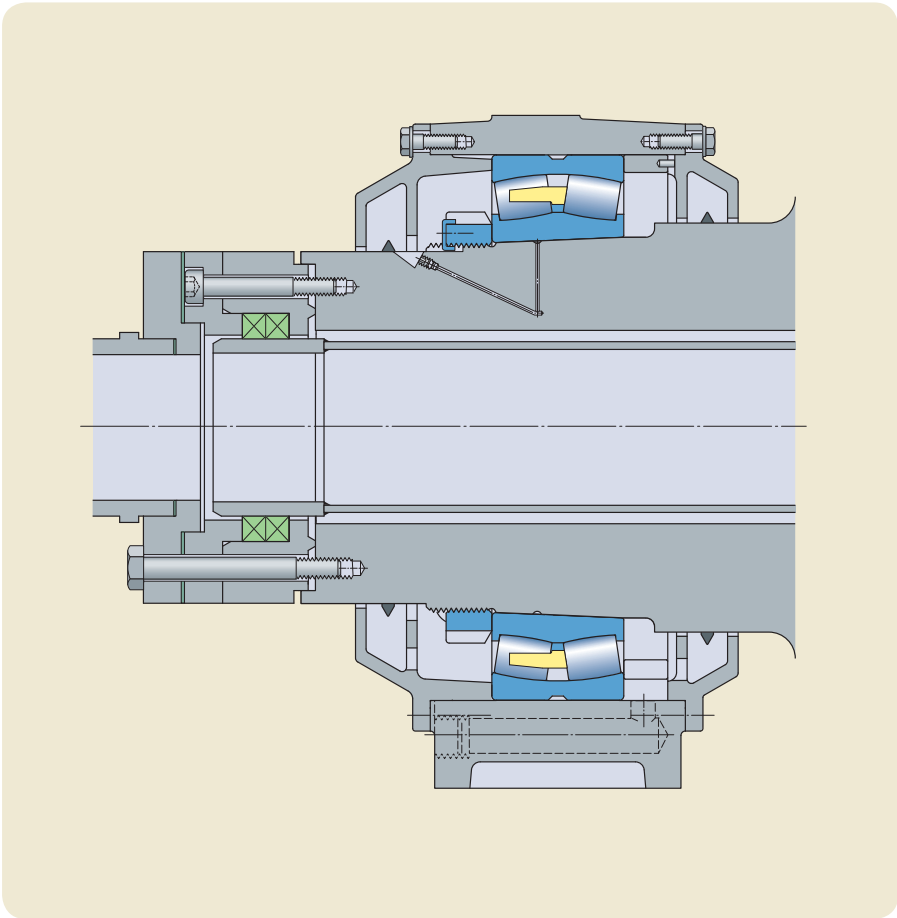

Bearing temperature/oil flow diagram

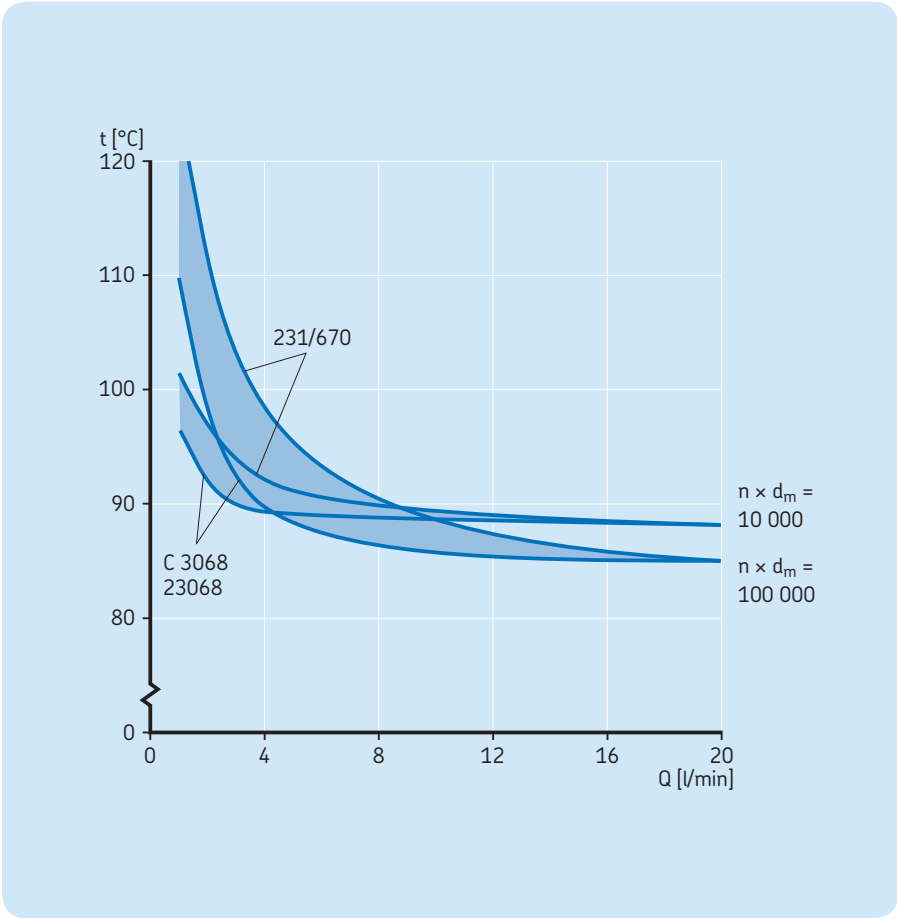

Example 27

Yankee cylinder with steam temperature 190 °C (*374 °F*)

Lubrication guidelines

As Yankee cylinder bearings rotate at relatively low speeds and are subjected to high temperatures, there will be metallic contact between rollers and raceways. This means that there is a risk of surface distress. To avoid this risk, the circulating oil should have efficient AW additives and a viscosity ratio κ according to the guidelines in *Chapter 9*, *Maintenance*, *How to avoid surface damage*, **page 28**.

General guidelines, as outlined in *Chapter 7*, *Lubrication*, *Oil lubrication* (→ **pages 13–16**), should also be taken into account.

Comments on the diagram

Bearing temperature depends on the bearing speed, applied load and external cooling or heating of the bearing arrangement. Therefore, the calculated bearing temperatures in the diagram are valid only when the bearing application and operating conditions are similar to those shown in this example.

The calculations for this diagram have been made using an SKF computer program to obtain the inner ring temperature. The load at each speed corresponds to the minimum recommended bearing life of 200 000 h.

An oil flow of 2–3 l/min, which is common in old machines, gives a bearing temperature of around 155 °C.

At operating temperatures above 100 °C, it is not possible to fulfil the κ guidelines and some mineral oils have shown a strong tendency to carbonize. Therefore, the recommendation for such applications is to improve the lubrication conditions as much as practically possible.

The diagram shows that the influence of the oil quantity is considerable up to 6–8 l/min, but after that, scarcely anything is gained by an increased oil flow except for large size bearings at high speeds.

The best remedy is to introduce efficient journal insulation which results in a bearing temperature of about 95 °C (→ *example 26*, **pages 52–53**). Changing to a synthetic oil is also beneficial.

Machine data

Paper grades	tissue, board
Roll position	dryer section
Paper speed	400–1 500 m/min (1 320–4 920 ft/min)

Operating conditions for the bearings

Ambient temperature	60 °C (*140 °F*)
Lubrication	circulating oil
Oil viscosity	ISO VG 320 or 460
Oil inlet temperature	45 °C (*113 °F*)
Journal insulation	none

Bearing application

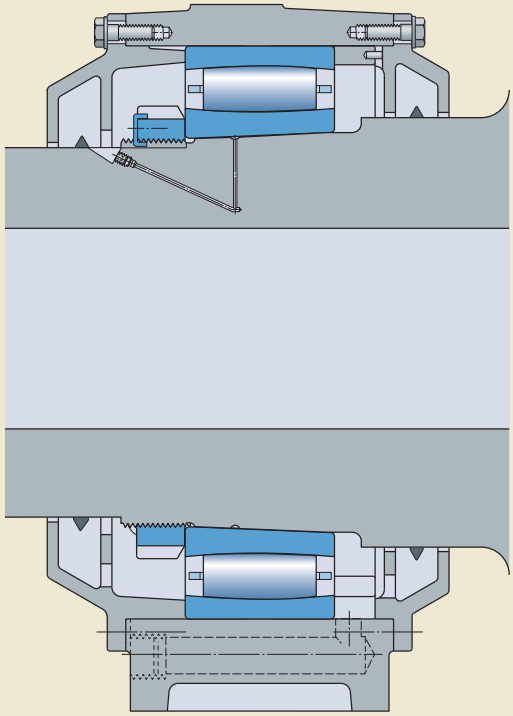

Bearing temperature/oil flow diagram

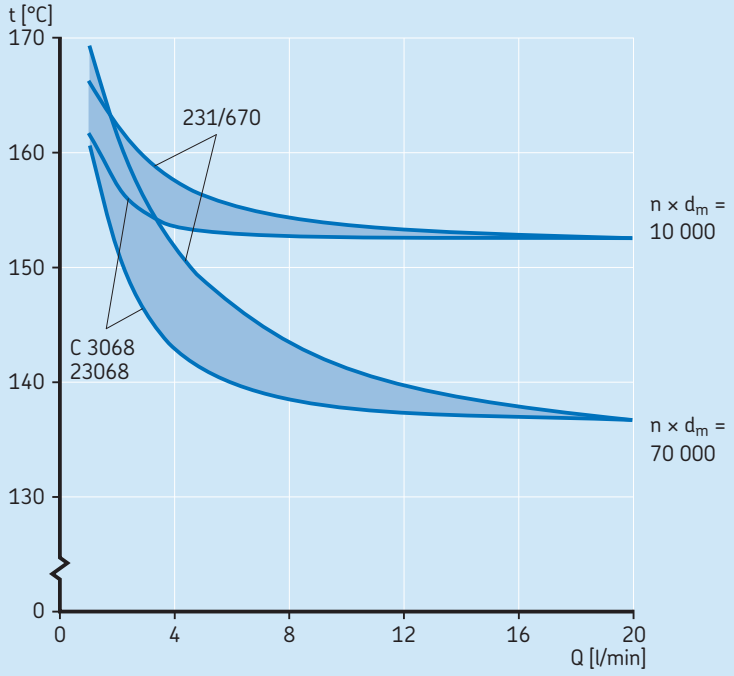

Example 28

Yankee cylinder with steam temperature 190 °C (*374 °F*)

Lubrication guidelines

As Yankee cylinder bearings rotate at relatively low speeds and are subjected to high temperatures, there will be metallic contact between rollers and raceways. This means that there is a risk of surface distress. To avoid this risk, the circulating oil should have efficient AW additives and a viscosity ratio κ according to the guidelines in *Chapter 9*, *Maintenance*, *How to avoid surface damage*, **page 28**.

General guidelines, as outlined in *Chapter 7*, *Lubrication*, *Oil lubrication* (**→ pages 13–16**), should also be taken into account.

Comments on the diagram

Bearing temperature depends on the bearing speed, applied load and external cooling or heating of the bearing arrangement. Therefore, the calculated bearing temperatures in the diagram are valid only when the bearing application and operating conditions are similar to those shown in this example.

The calculations for this diagram have been made using an SKF computer program to obtain the inner ring temperature. The load at each speed corresponds to the minimum recommended bearing life of 200 000 h.

An oil flow of 2–3 l/min was common in the early machines with insulated journals. Such an oil flow gives a bearing temperature of around 110 °C. If the bearing operating temperature is above 100 °C, it is impossible to fulfil the κ guidelines. The aim for this application is to find the optimum oil flow which results in a bearing temperature of 90–95 °C.

The diagram shows that the influence of the oil quantity is considerable up to 6–8 l/min, but after that, scarcely anything is gained by an increased oil flow except for large size bearings at high speeds.

Machine data

Paper grades	tissue, board
Roll position	dryer section
Paper speed	400–2 200 m/min (1 320–7 220 ft/min)

Operating conditions for the bearings

Ambient temperature	60 °C (*140 °F*)
Lubrication	circulating oil
Oil viscosity	ISO VG 320 or 460
Oil inlet temperature	45 °C (*113 °F*)
Journal insulation	yes

Bearing application

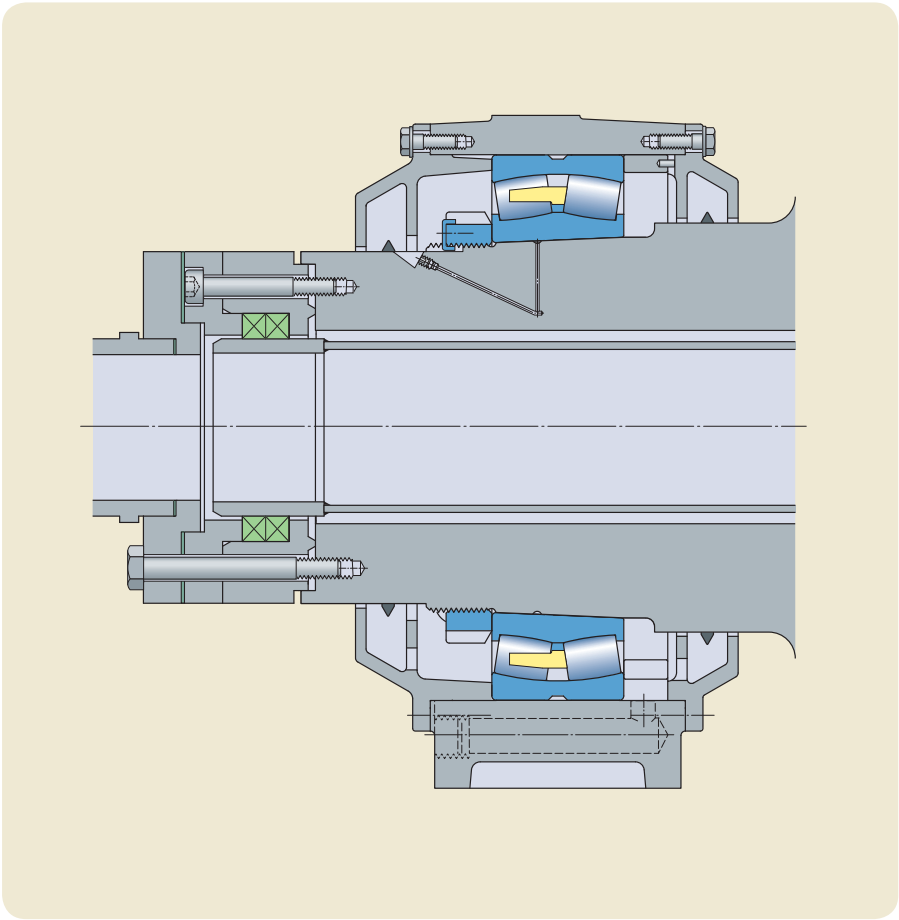

Bearing temperature/oil flow diagram

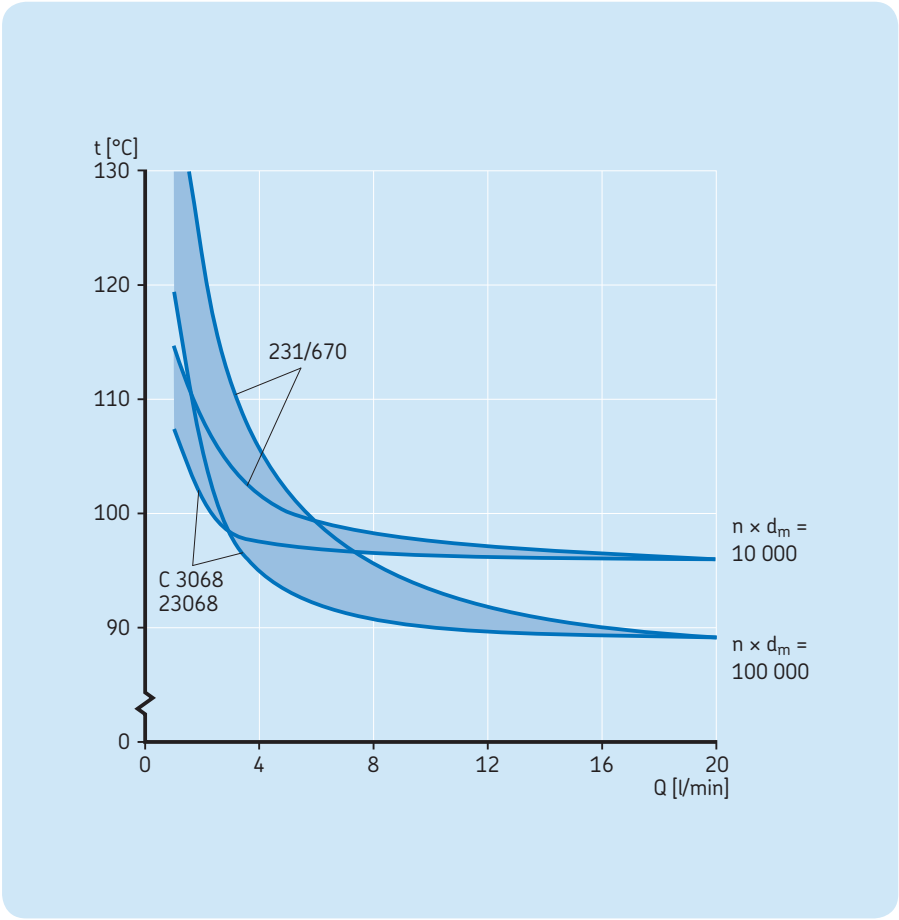

Example 29

Paper guide roll (grease)

Lubrication guidelines

SKF's experience is that a grease with a base oil viscosity of minimum 175 mm²/s provides good lubrication performance in this position. Operating conditions for grease lubricated bearings in the forming section are more severe than in this example. Therefore, the grease selected for the forming section can also be used here.

General guidelines, as outlined in *Chapter 7, Lubrication, Grease lubrication* (→ **pages 13–16**), should also be taken into account.

Comments on the diagram

Bearing temperature depends on the bearing speed, applied load and external cooling or heating of the bearing arrangement. Heat transfer from the housing, shaft and the foundation is largely dependent on the bearing application and operating conditions. Therefore, the calculated bearing temperatures in this example are valid only when the bearing application and operating conditions are similar to those shown in this example.

The calculations for this diagram have been made using an SKF computer program to obtain the outer ring temperature at different speeds. The load at each speed corresponds with the recommended bearing life of 120 000 h.

The highest bearing temperature shown in the diagram is 75 °C as it is customary to use oil lubrication at higher temperatures.

Machine data

Paper grades	board, liner, fine, newsprint
Roll position	after dryer section
Paper speed	100–1 000 m/min (330–3 300 ft/min)

Operating conditions for the bearings

Ambient temperature	45 °C *(113 °F)*
Lubrication	grease
Base oil viscosity	175 mm²/s at 40 °C

Bearing application

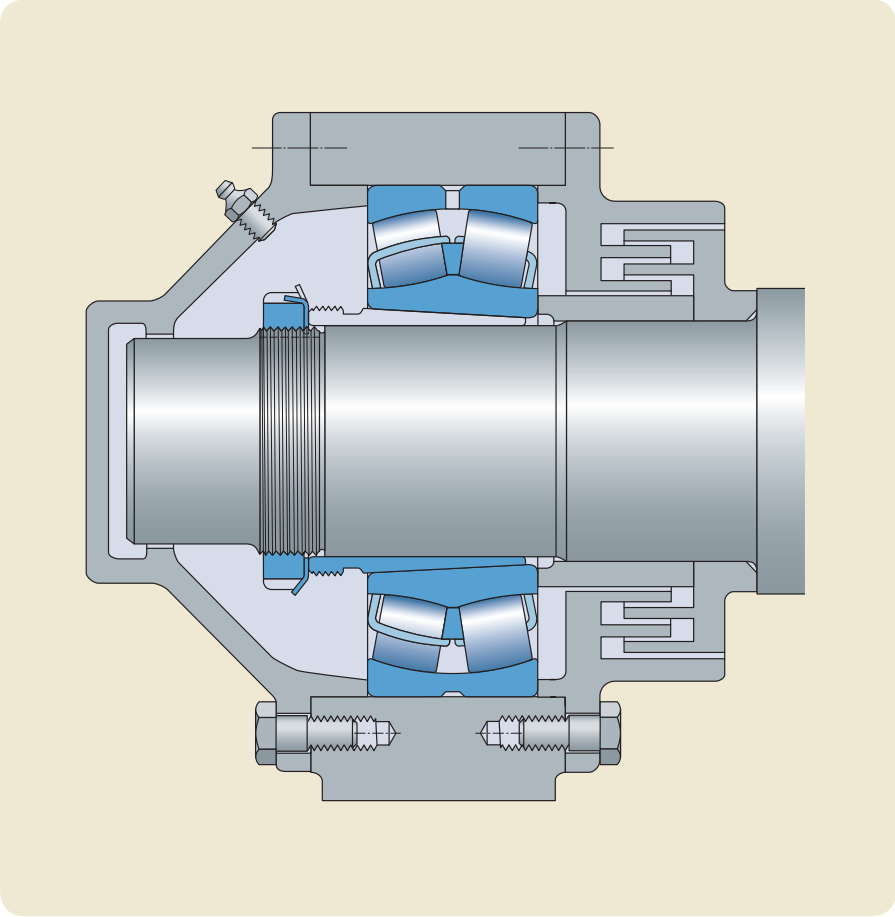

Bearing temperature/speed factor diagramm

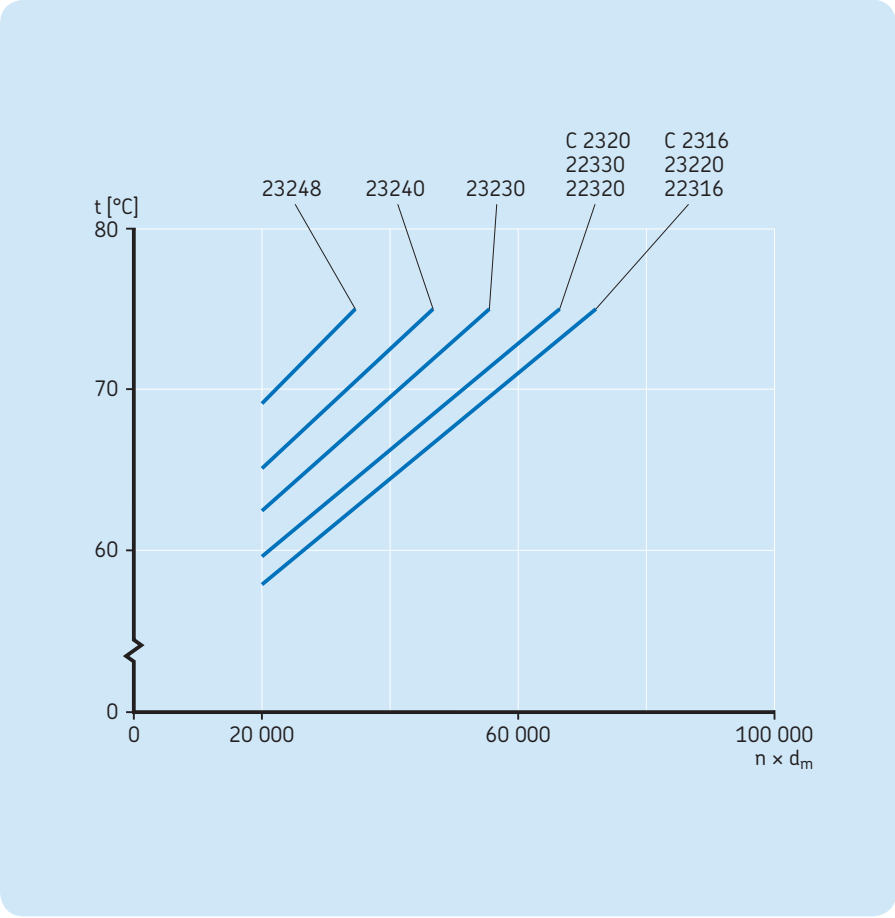

Example 30

Paper guide roll (oil)

Lubrication guidelines

Paper guide roll bearings have better operating conditions than drying cylinder bearings which are lubricated from the same circulating oil system. Therefore, the lubricant properties should be based on the operating conditions for drying cylinder bearings. However, the paper guide roll bearings should have an oil flow resulting in a viscosity ratio κ according to the guidelines in *Chapter 9*, *Maintenance*, *How to avoid surface damage*, **page 28**.

General guidelines, as outlined in *Chapter 7*, *Lubrication*, *Oil lubrication* (**→ pages 13–16**), should also be taken into account.

Comments on the diagram

Bearing temperature depends on the bearing speed, applied load and external cooling or heating of the bearing arrangement. Heat transfer from the housing, shaft and the foundation is largely dependent on the bearing application and operating conditions. Therefore, the calculated bearing temperatures in the diagram are valid only when the bearing application and operating conditions are similar to those shown in this example.

The calculations for this diagram have been made using an SKF computer program to obtain the outer ring temperature. The load at each speed corresponds to the recommended bearing life of 200 000 h. The oil flow in the diagram is based on the use of an ISO VG 220 oil and selected to fulfil two criteria: the κ guidelines and a bearing operating temperature of 75 °C.

If an oil with lower viscosity than ISO VG 220 is used, the flow must be increased in order to reach the same κ value. A thicker oil, e.g. ISO VG 320, is advantageous and will improve the lubrication conditions, but the bearing temperature will increase a little.

Note that the diagram shows minimum acceptable oil flow. Slightly higher oil flow values are acceptable and beneficial in most cases.

Machine data

Paper grades	all
Roll position	after dryer section
Paper speed	400–2 200 m/min (1 320–7 220 ft/min)

Operating conditions for the bearings

Ambient temperature	45 °C *(113 °F)*
Lubrication	circulating oil
Oil viscosity	ISO VG 220
Oil inlet temperature	50 °C *(122 °F)*

Bearing application

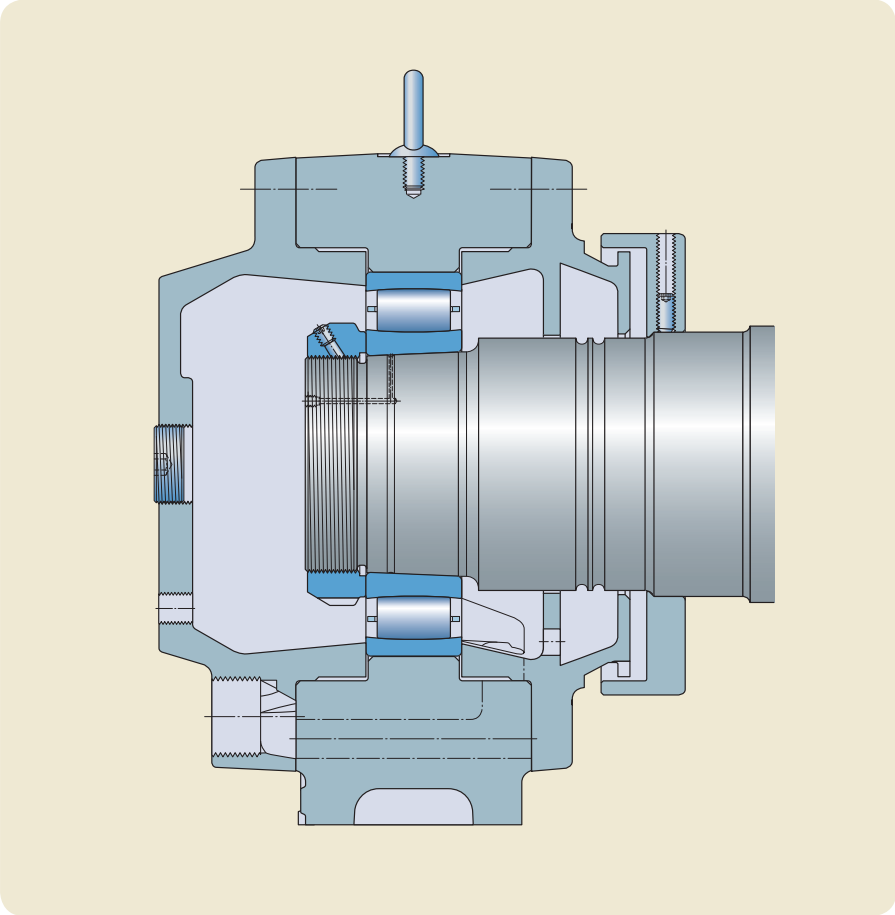

Oil flows for bearing temperature 75 °C (167 °F)

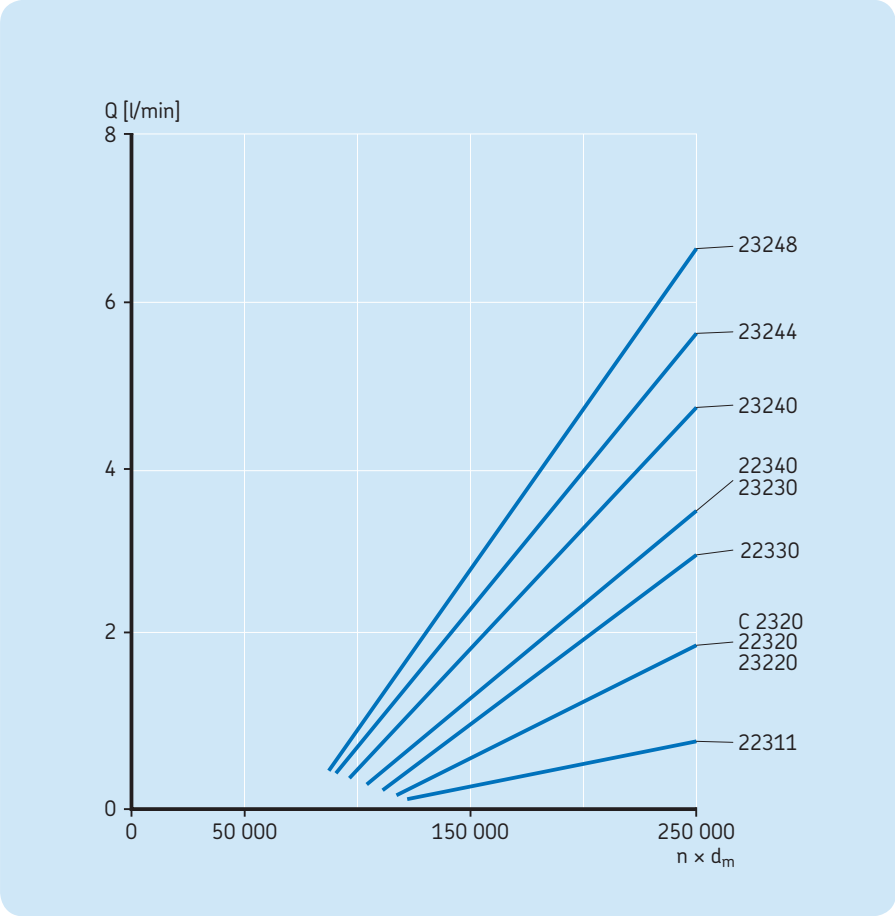

Example 31

Calender roll, plain, unheated (oil bath)

Lubrication guidelines

The bearings in this example have relatively good lubrication conditions. However, bearings running at low speeds will have metal-to-metal contact between rollers and raceways. This gives a risk of surface distress. To avoid this risk, the lubricating oil should have efficient AW additives and a viscosity ratio κ according to the guidelines in *Chapter 9*, *Maintenance*, *How to avoid surface damage*, **page 28**.

General guidelines, as outlined in *Chapter 7*, *Lubrication*, *Oil lubrication* (**→ pages 13–16**), should also be taken into account.

Comments on the diagram

Bearing temperature depends on the bearing speed, applied load and external cooling or heating of the bearing arrangement. Therefore, the calculated bearing temperatures in the diagram are valid only when the bearing application and operating conditions are similar to those shown in this example.

The calculations for this diagram have been made using an SKF computer program to obtain the outer ring temperature. The load at each speed corresponds to the minimum recommended bearing life of 120 000 h.

In this example, oil bath lubrication fulfils the SKF lubrication guidelines regarding the viscosity ratio κ but not the guidelines for lubricant cleanliness. Therefore, the recommendation for this application is to improve the lubricant cleanliness.

Oil cleanliness can be improved by various means e.g. by improved seals for the bearing housing, decreased time between the oil changes or the introduction of an oil circulation system with filters and water extractors. However, the cost for these can sometimes be higher than the gains from increased machine availability and decreased bearing consumption.

Machine data

Paper grades	board, fine
Roll position	machine calender (old machines)
Paper speed	100–700 m/min (330–2 300 ft/min)

Operating conditions for the bearings

Ambient temperature	45 °C *(113 °F)*
Lubrication	oil bath
Oil viscosity	ISO VG 220

Bearing applicationg

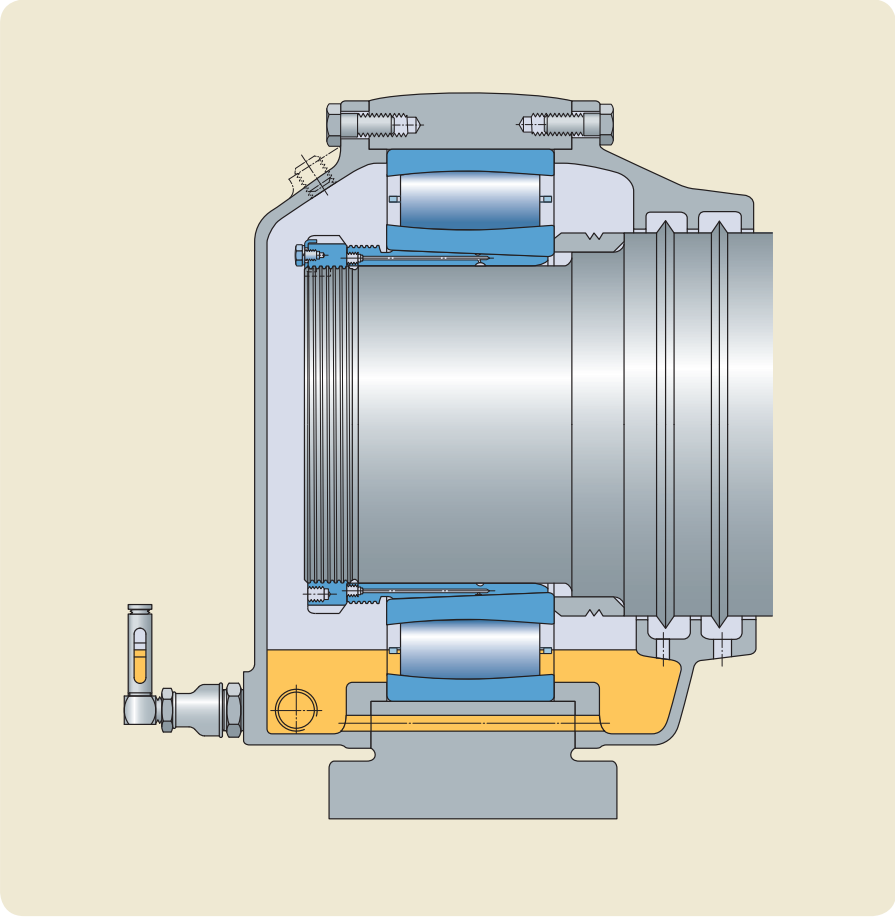

Bearing temperature/speed factor diagram

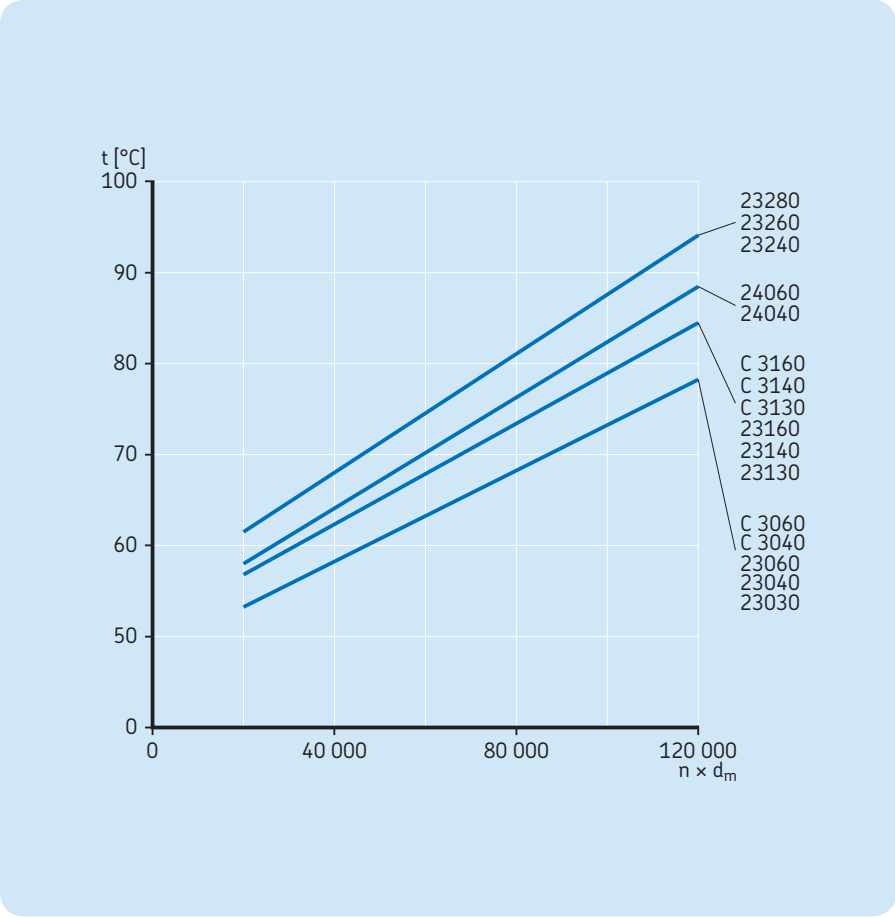

Example 32

Calender roll, plain, unheated (oil)

Lubrication guidelines

The guidelines below are based on a large size bearing rotating at high speed, because these bearings have the most demanding operating conditions.

Large bearings rotating at high speed are subjected to a risk of smearing. To avoid smearing, the oil should have EP additives and the viscosity ratio κ should be according to the guidelines in *Chapter 9*, *Maintenance*, *How to avoid surface damage*, **page 28**.

General guidelines, as outlined in *Chapter 7*, *Lubrication*, *Oil lubrication* (→ **pages 13–16**), should also be taken into account.

Comments on the diagram

Bearing temperature depends on the bearing speed, applied load and external cooling or heating of the bearing arrangement. Heat transfer from the housing, shaft and the foundation is largely dependent on the bearing application and operating conditions. Therefore, the oil flow in the diagram is valid only when the bearing application and operating conditions are similar to those shown in this example.

The calculations for this diagram have been made using an SKF computer program to obtain the outer ring temperature. The load at each speed corresponds to the minimum recommended bearing life of 120 000 h.

The oil flow in the diagram is based on the use of an ISO VG 220 oil and selected to fulfil two criteria: the κ guidelines and a bearing operating temperature of 75 °C. If an oil with lower viscosity than ISO VG 220 is used for these bearings, the oil flows must be increased.

An oil with higher viscosity is advantageous and will improve the lubrication conditions, but the bearing temperature will increase a little. Note that the diagram shows minimum acceptable oil flow. Slightly higher oil flow values are acceptable and beneficial in most cases.

Machine data

Paper grades	board, liner, fine, newsprint
Roll position	machine calender
Paper speed	400–2 000 m/min (1 310–6 550 ft/min)

Operating conditions for the bearings

Ambient temperature	45 °C *(113 °F)*
Lubrication	circulating oil
Oil viscosity	ISO VG 220
Oil inlet temperature	50 °C *(122 °F)*

Bearing application

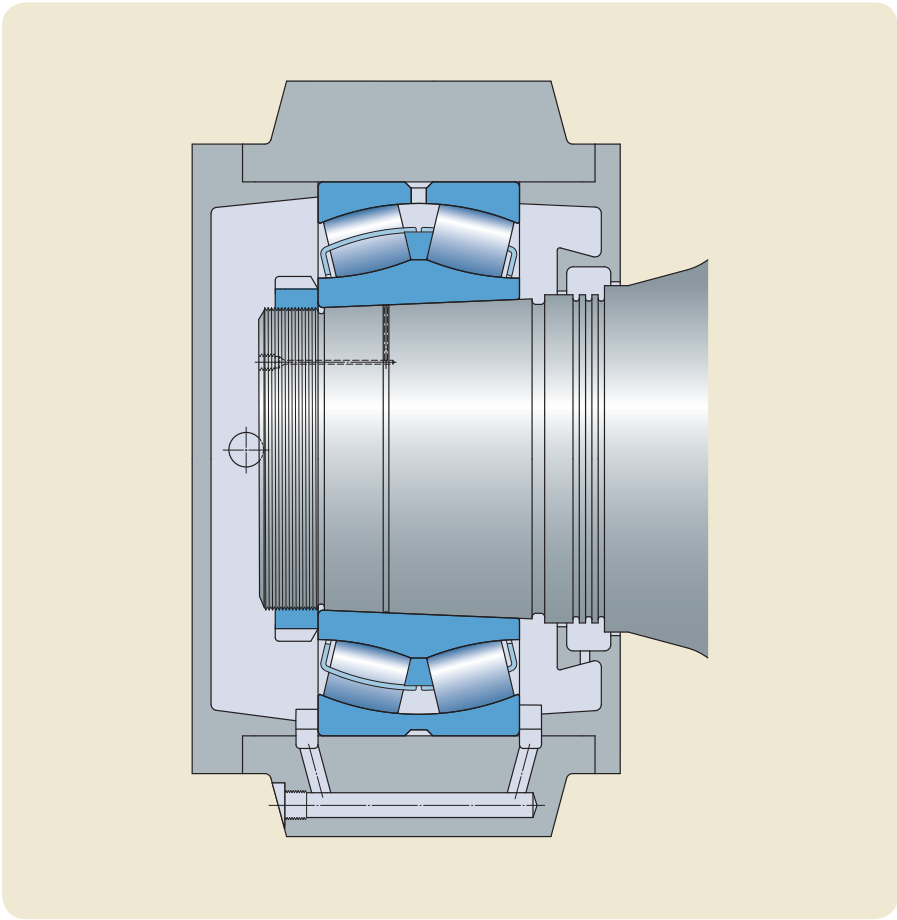

Oil flows for bearing temperature 75 °C (167 °F)

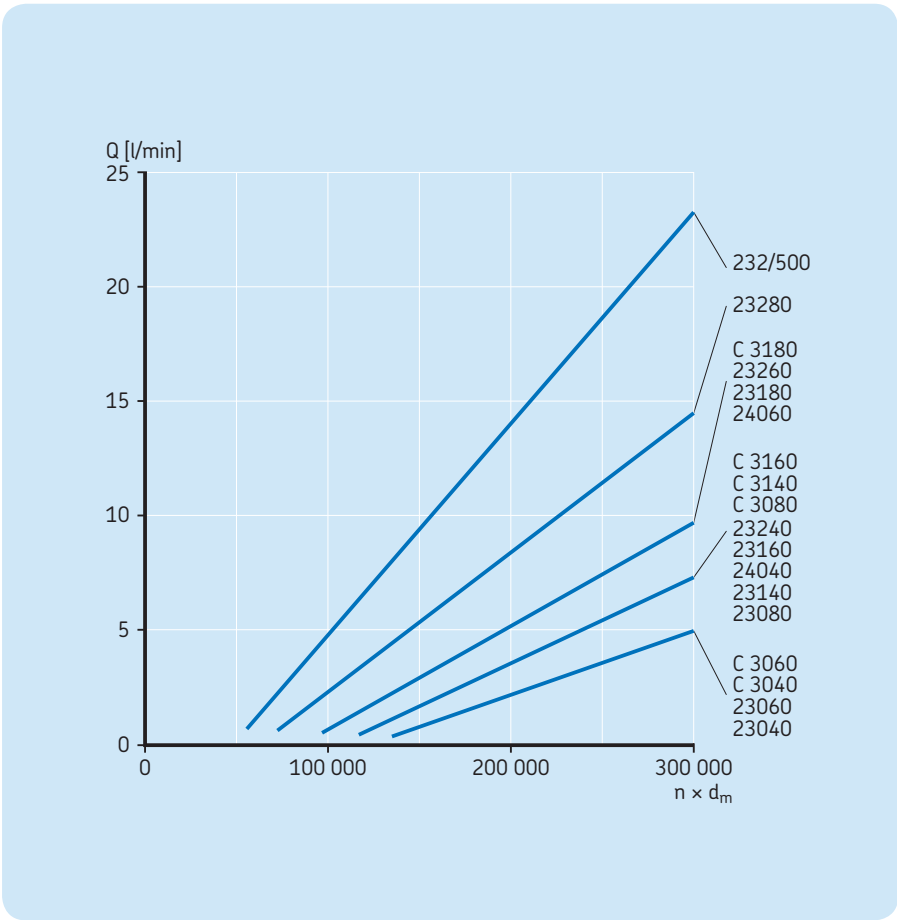

Example 33

Calender roll with steam temperature 140 °C *(284 °F)*

Lubrication guidelines

As large calender roll bearings sometimes rotate at high speeds there is a risk of smearing. To avoid smearing, SKF usually recommends the use of an oil with efficient EP additives and oil flows resulting in a viscosity ratio k according to the guidelines in *Chapter 9*, *Maintenance*, *How to avoid surface damage*, **page 28**. However, with the above operating conditions, the bearing temperature will be too high for EP additives and accordingly, oils with efficient AW additives have to be used.

General guidelines, as outlined in *Chapter 7*, *Lubrication*, *Oil lubrication* (→ **pages 13–16**), should also be taken into account.

Comments on the diagram

Bearing temperature depends on the bearing speed, applied load and external cooling or heating of the bearing arrangement. Therefore, the calculated bearing temperatures in this example are valid only when the bearing application and operating conditions are similar to those shown in this example.

The calculations for this diagram have been made using an SKF computer program to obtain the inner ring temperature. The load at each speed corresponds to the minimum recommended bearing life of 120 000 h.

At high speeds, it is not possible to fulfil the κ guidelines and, accordingly, the best possible lubrication conditions should be aimed for, especially since EP additives cannot be used.

At low speeds, the diagram shows that the influence of the oil quantity on bearing temperature is considerable up to 2–4 l/min, but after that, scarcely anything is gained by an increased oil flow. For large size bearings rotating at high speeds, the diagram shows that the influence of the oil quantity is considerable up to about 8 l/min.

An oil with higher viscosity is beneficial and will improve the lubrication conditions, but the bearing temperature will increase a little.

Machine data

Paper grades	board, liner, fine, newsprint
Roll position	machine calender
Paper speed	400–2 000 m/min (1 310–6 550 ft/min)

Operating conditions for the bearings

Ambient temperature	45 °C *(113 °F)*
Lubrication	circulating oil
Oil viscosity	ISO VG 220
Oil inlet temperature	50 °C *(122 °F)*
Journal insulation	bore and end face

Bearing application

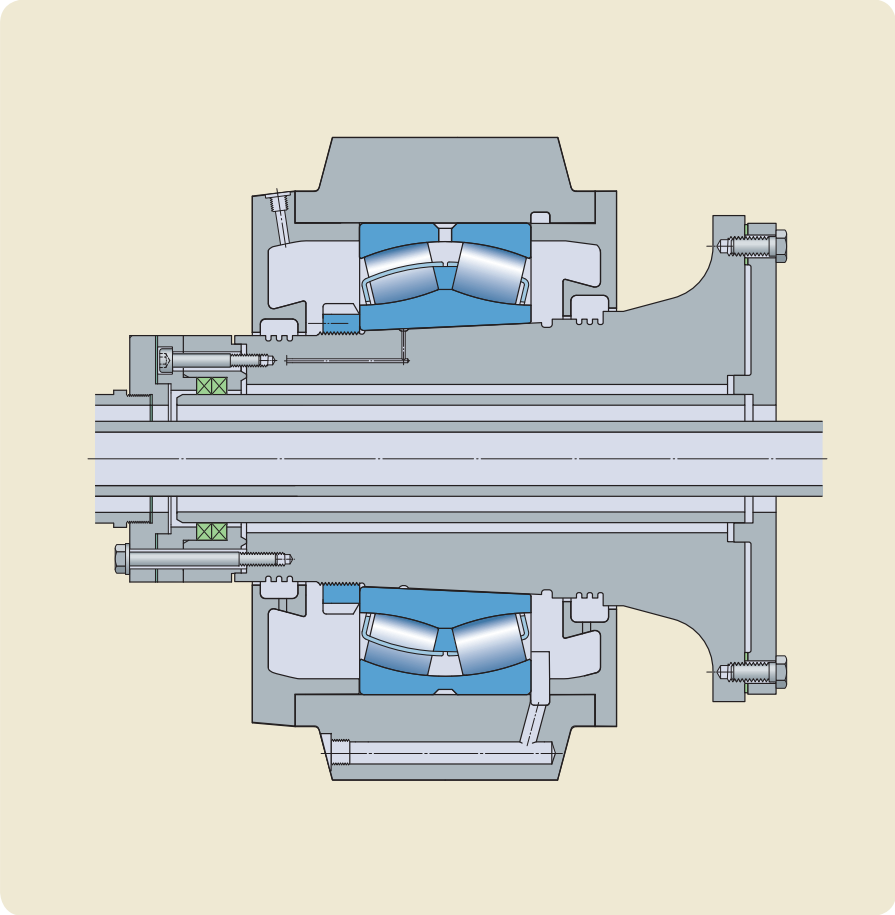

Bearing temperature/oil flow diagram

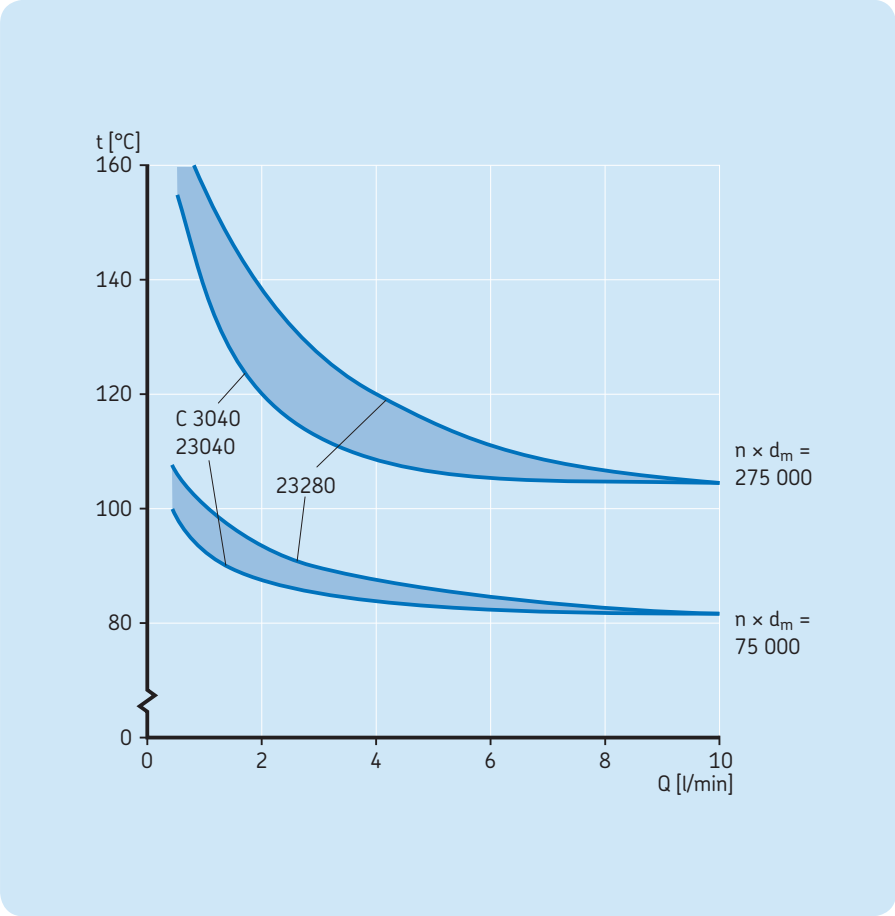

Example 34

Calender roll with steam/oil temperature 175 °C (*347 °F*)

Lubrication guidelines

As large calender roll bearings sometimes rotate at high speeds, there is a risk of smearing. To avoid smearing, SKF usually recommends the use of an oil with efficient EP additives and oil flows giving a viscosity ratio κ according to the guidelines in *Chapter 9*, *Maintenance*, *How to avoid surface damage*, **page 28**. However, with the above operating conditions, the bearing temperature will be too high for EP additives and, accordingly, oils with efficient AW additives have to be used.

General guidelines, as outlined in *Chapter 7*, *Lubrication*, *Oil lubrication* (→ **pages 13–16**), should also be taken into account.

Comments on the diagram

Bearing temperature depends on the bearing speed, applied load and external cooling or heating of the bearing arrangement. Therefore, the calculated bearing temperatures in this example are valid only when the bearing application and operating conditions are similar to those indicated here.

The calculations for this diagram have been made using an SKF computer program to obtain the inner ring temperature. The load at each speed corresponds to the minimum recommended bearing life of 120 000 h.

At high speeds, it is not possible to fulfil the κ guidelines in *Chapter 9*, *Maintenance*, *How to avoid surface damage*, **page 28**, and accordingly, the best possible lubrication conditions should be aimed for, especially since EP additives cannot be used.

At low speeds, the diagram shows that the influence of the oil quantity on bearing temperature is considerable up to 3–6 l/min, but after that, scarcely anything is gained by an increased oil flow. For large size bearings rotating at high speeds, the diagram shows that the influence of the oil quantity is considerable up to about 12 l/min.

An oil with higher viscosity is beneficial and will improve the lubrication conditions, but the bearing temperature will increase a little.

Machine data

Paper grades	board, liner, fine, newsprint
Roll position	machine/soft calender
Paper speed	400–2 000 m/min (1 310–6 550 ft/min)

Operating conditions for the bearings

Ambient temperature	50 °C (*122 °F*)
Lubrication	circulating oil
Oil viscosity	ISO VG 320
Oil inlet temperature	40 °C (*104 °F*)
Journal insulation	bore and end face

Bearing application

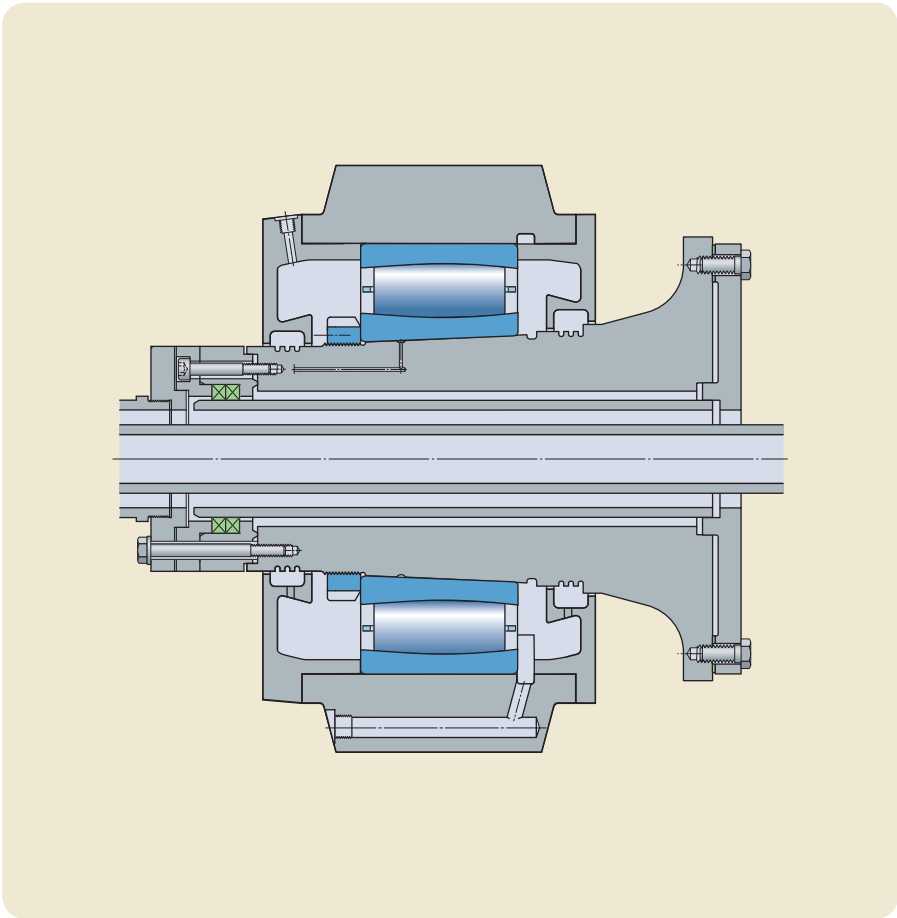

Bearing temperature/oil flow diagram

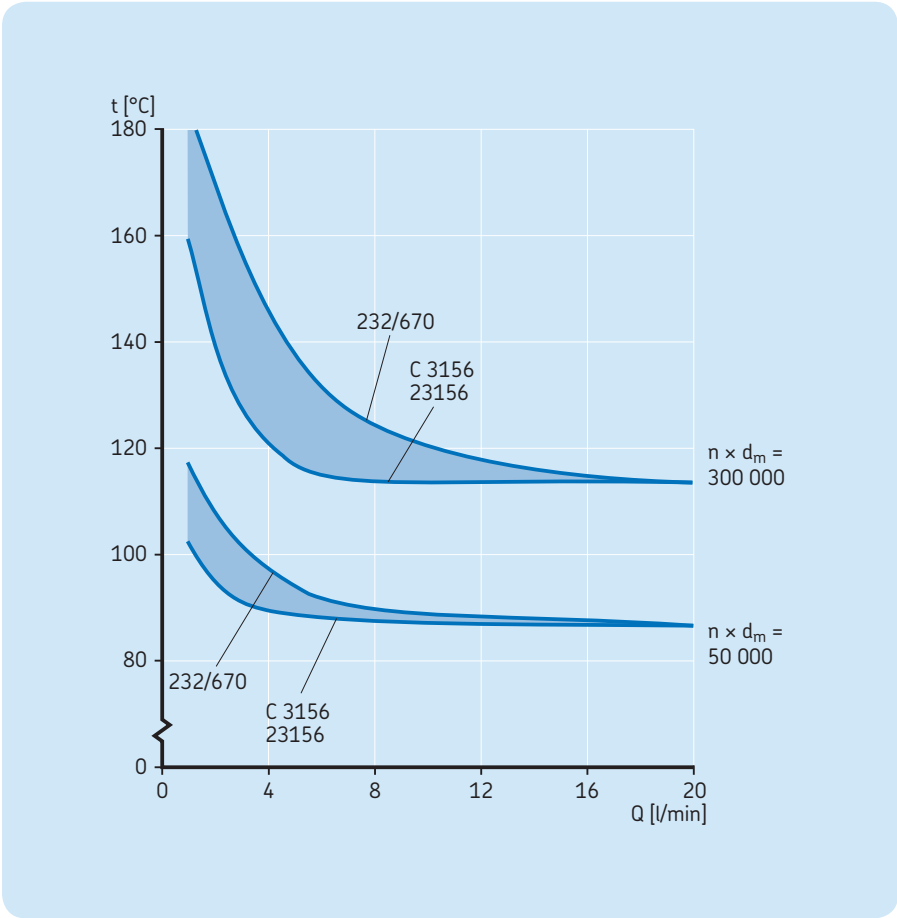

Example 35

Calender roll with oil temperature 250 °C (*482 °F*)

Lubrication guidelines

As large calender roll bearings sometimes rotate at high speeds, there is a risk of smearing. To avoid smearing, SKF usually recommends the use of an oil with efficient EP additives and oil flows giving a viscosity ratio κ conditions, to the guidelines in *Chapter 9*, *Maintenance*, *How to avoid surface damage*, **page 28**. However, with the above operating conditions the bearing temperature will be too high for EP additives and, accordingly, oils with efficient AW additives have to be used.

General guidelines, as outlined in *Chapter 7*, *Lubrication*, *Oil lubrication* (→ **pages 13–16**), should also be taken into account.

Comments on the diagram

Bearing temperature depends on the bearing speed, applied load and external cooling or heating of the bearing arrangement. Therefore, the calculated bearing temperatures in this example are valid only when the bearing application and operating conditions are similar to those shown in this example.

The calculations for this diagram have been made using an SKF computer program to obtain the inner ring temperature. The load at each speed corresponds to the minimum recommended bearing life of 120 000 h.

Except for small bearings rotating at low speeds, it is not possible to fulfil the κ guidelines in *Chapter 9*, *Maintenance*, *How to avoid surface damage*, **page 28**. Accordingly, the best possible lubrication conditions should be aimed for.

At low speeds, the diagram shows that the influence of the oil quantity on bearing temperature is considerable up to 4–6 l/min, but after that, scarcely anything is gained by an increased oil flow. For large size bearings rotating at high speeds, the diagram shows that the influence of the oil quantity is considerable up to about 16 l/min.

An oil with higher viscosity is beneficial and will improve the lubrication conditions, but the bearing temperature will increase a little.

Machine data

Paper grades	board, liner, fine, newsprint
Roll position	machine/soft calender
Paper speed	400–2 000 m/min (1 310–6 550 ft/min)

Operating conditions for the bearings

Ambient temperature	50 °C (*122 °F*)
Lubrication	circulating oil
Oil viscosity	ISO VG 320
Oil inlet temperature	40 °C (*104 °F*)
Journal insulation	bore and end face

Bearing application

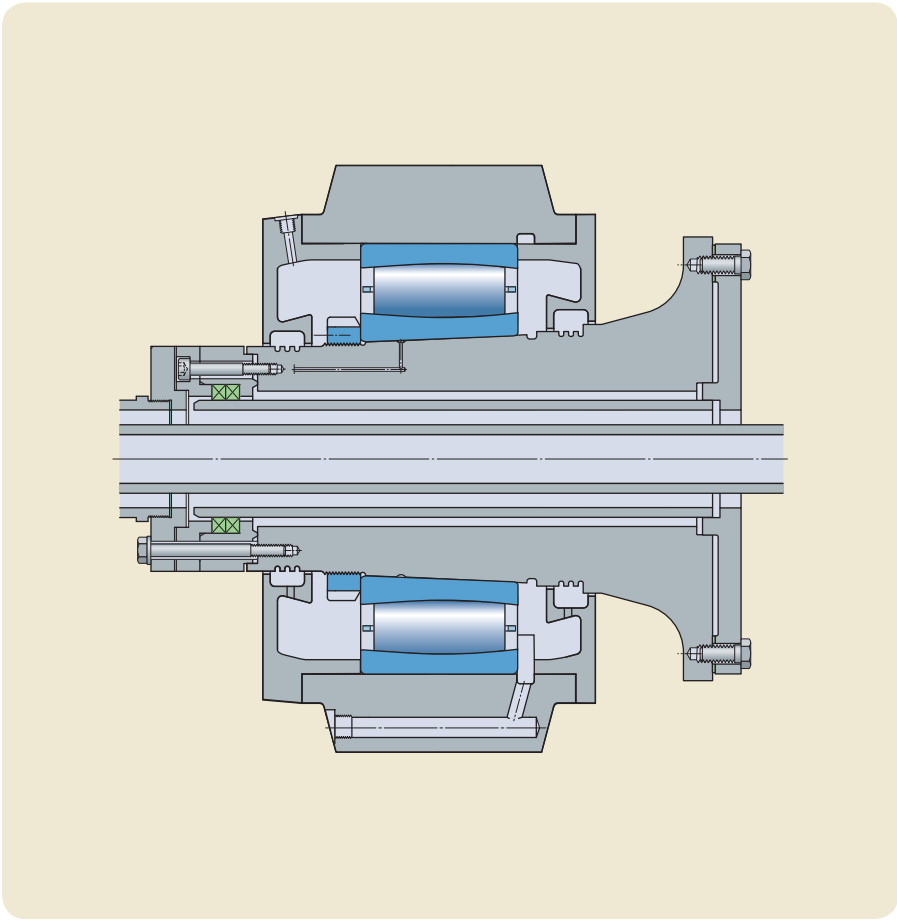

Bearing temperature/oil flow diagram

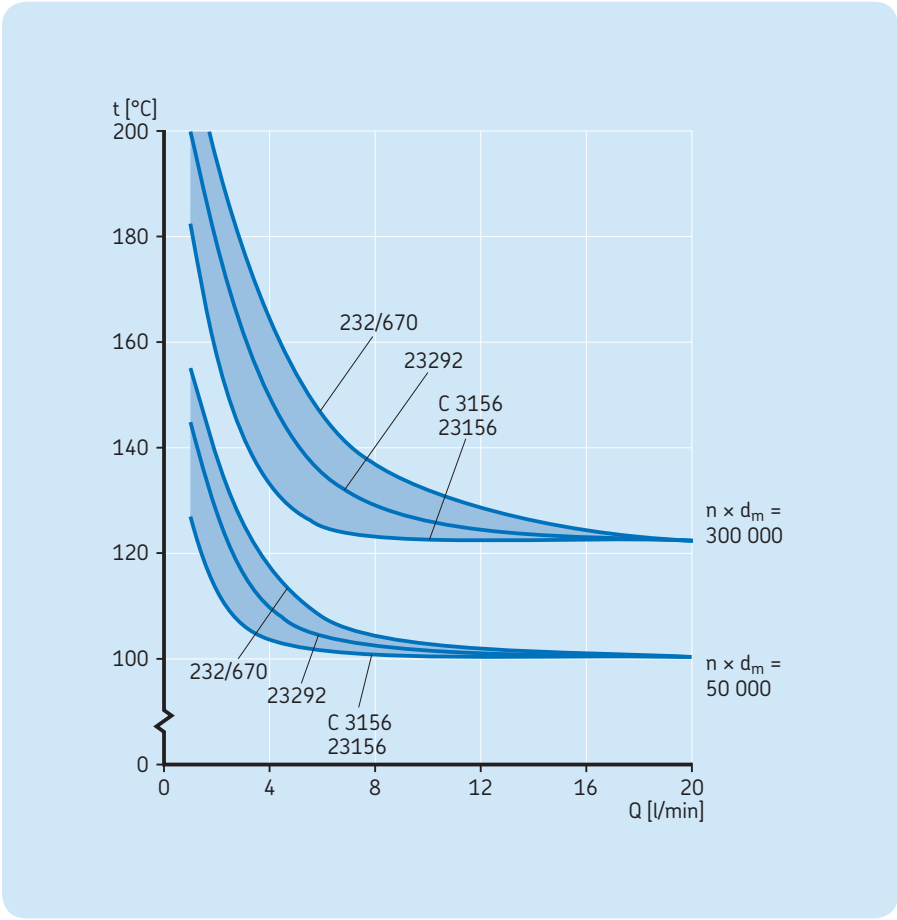

Example 36

Reel drum (grease)

Lubrication guidelines

SKF's experience is that a grease with a base oil viscosity of minimum 175 mm²/s provides good lubrication performance in this position.

The same grease used in the forming section can be used in this application because the basic demands are the same and the special demands such as those for rust protection are higher in the forming section.

General guidelines, as outlined in *Chapter 7*, *Lubrication*, *Grease lubrication* (→ **pages 8–12**), should also be taken into account.

Comments on the diagram

Bearing temperature depends on the bearing speed, applied load and external cooling or heating of the bearing arrangement. Heat transfer from the housing, shaft and the foundation is largely dependent on the bearing application and operating conditions. Therefore, the calculated bearing temperatures in the diagram are valid only when the bearing application and operating conditions are similar to those shown in this example.

The calculations for this diagram have been made using an SKF computer program to obtain the outer ring temperature. The load at each speed corresponds to the minimum recommended bearing life of 120 000 h. The highest bearing temperature shown in the diagram is 75 °C as it is customary to use oil lubrication at higher temperatures.

Machine data

Paper grades	all
Roll position	reeler
Paper speed	100–600 m/min (330–1 970 ft/min)

Operating conditions for the bearings

Ambient temperature	35 °C *(95 °F)*
Lubrication	grease
Base oil viscosity	175 mm²/s at 40 °C

Bearing application

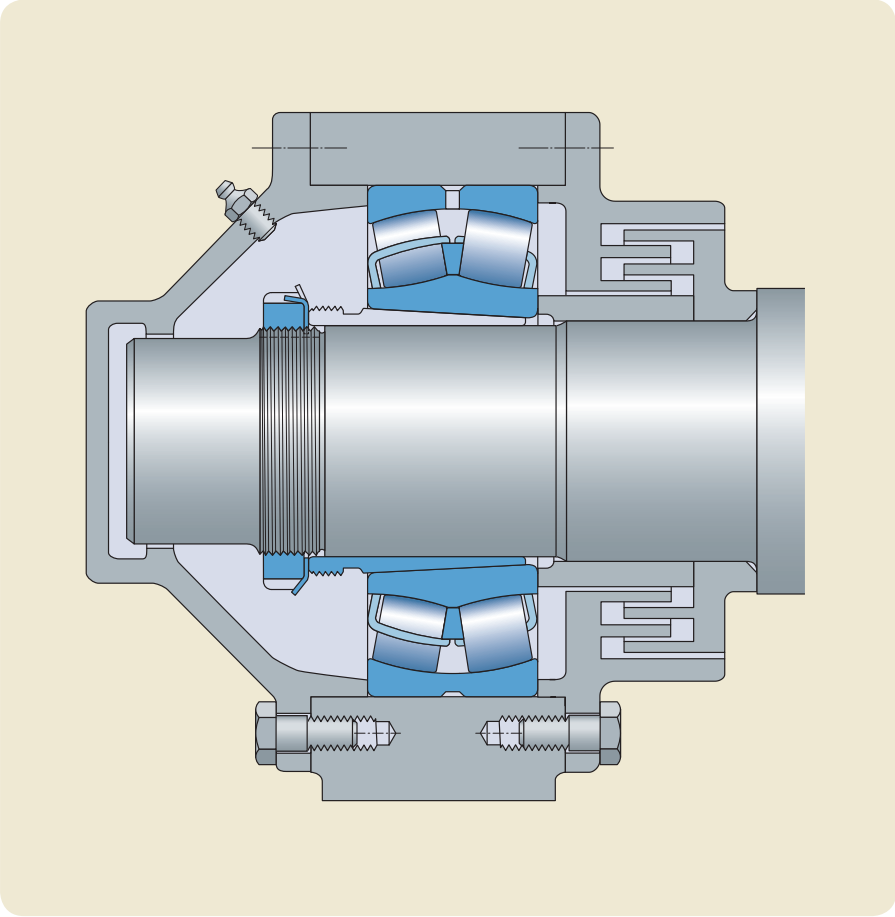

Bearing temperature/speed factor diagram

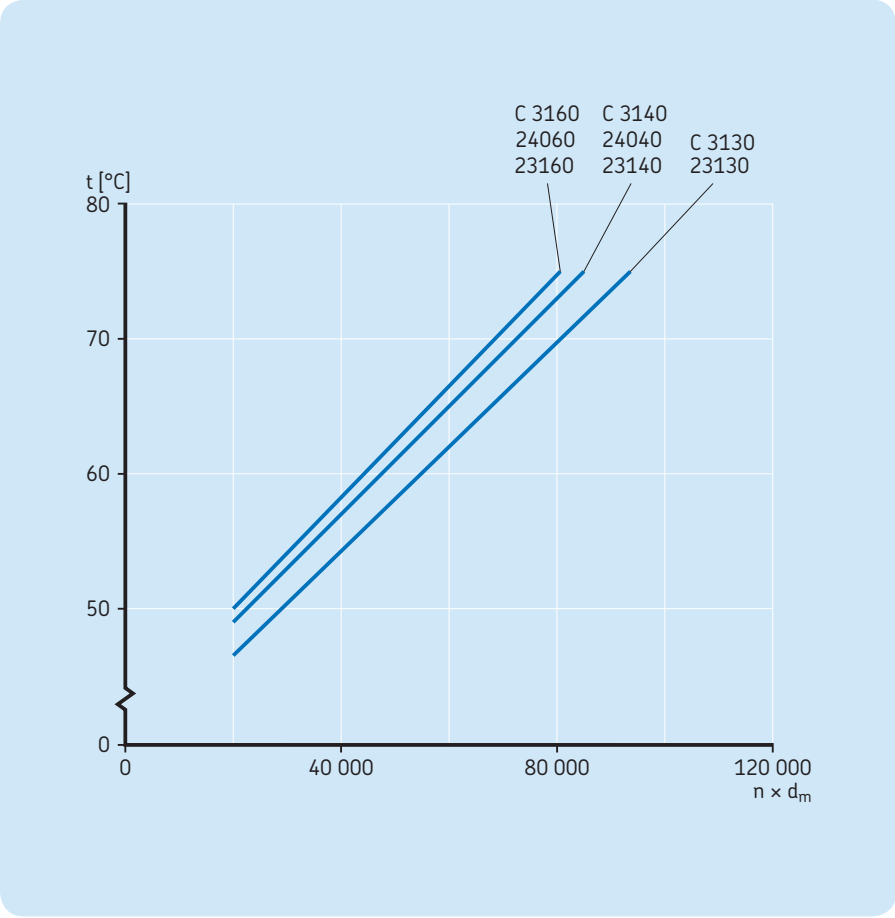

Example 37

Reel drum (oil)

Lubrication guidelines

Reel drum bearings have better operating conditions than drying cylinder bearings which often are lubricated from the same circulating oil system. Therefore, the lubricant properties should be based on the operating conditions for drying cylinder bearings. However, the reel drum bearings should have an oil flow giving a viscosity ratio κ according to the guidelines in *Chapter 9*, *Maintenance*, *How to avoid surface damage*, **page 28**. General guidelines, as outlined in *Chapter 7*, *Lubrication*, *Oil lubrication* (→ **pages 13–16**), should also be taken into account.

Comments on the diagram

Bearing temperature depends on the bearing speed, applied load and external cooling or heating of the bearing arrangement. Heat transfer from the housing, shaft and the foundation is largely dependent on the bearing application and operating conditions. Therefore, the calculated bearing temperatures in the diagram are valid only when the bearing application and operating conditions are similar to those shown in this example.

The calculations for this diagram have been made using an SKF computer program to obtain the outer ring temperature. The load at each speed corresponds to the minimum recommended bearing life of 120 000 h. The oil flow in the diagram is based on the use of an ISO VG 220 oil and selected to fulfil two criteria: the κ guidelines in *Chapter 9*, *Maintenance*, *How to avoid surface damage*, **page 28**, and a bearing operating temperature of 75 °C. If an oil with lower viscosity than ISO VG 220 is used, the flow must be increased in order to reach the same κ value.

An oil with higher viscosity is beneficial and will improve the lubrication conditions, but the bearing temperature will increase a little. Note that the diagram shows minimum acceptable oil flow. Slightly higher oil flow values are acceptable and beneficial in most cases.

Machine data

Paper grades	all
Roll position	reeler
Paper speed	400–2 200 m/min (1 310–7 220 ft/min)

Operating conditions for the bearings

Ambient temperature	35 °C *(95 °F)*
Lubrication	circulating oil
Oil viscosity	ISO VG 220
Oil inlet temperature	45 °C *(113 °F)*

Bearing application

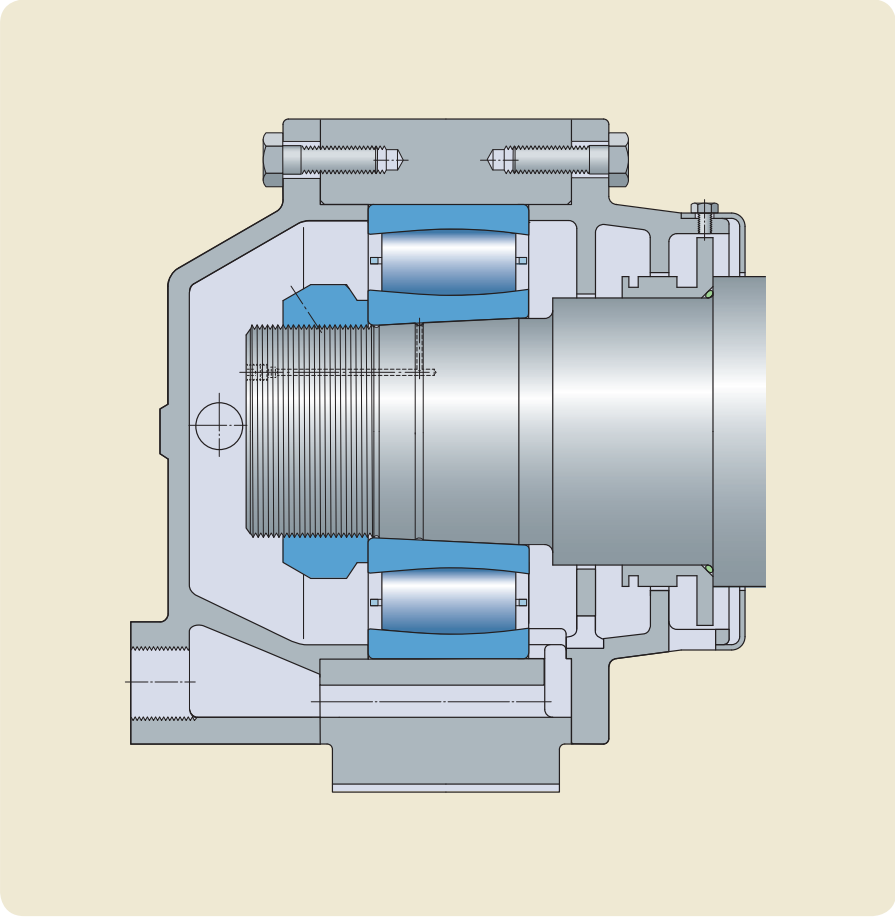

Oil flows for bearing temperature 75 °C (167 °F)