www.bergab.ru Берг АБ bergab@ya.ru Тел. (495)-228-06-21, факс (495) 223-3071

ACTUATOR

www.bergab.ru Берг АБ bergab@ya.ru Тел. (495)-228-06-21, факс (495) 223-3071

www.bergab.ru Берг АБ bergab@ya.ru Тел. (495)-228-06-21, факс (495) 223-3071

ACTUATOR

NB's BG type is a compact single axis actuator which integrates a slide guide and precision ball screw.
BG type offers compact dimensions and outperforms conventional positioning tables. This is made possible by a unique "U" shaped guide rail and slide block which provides multiple functions of a guide block and a ball screw nut combined into a single unit. The "U" shaped guide rail design offers a high rigid structure resistant to bending. This structural feature allows for integrated framework of machinery or equipment and may be one-end supported. Additionally, the slide block contains 4 ball circuits which delivers high load capacity, high accuracy and high rigidity.

Figure I-1 Structure of BG type

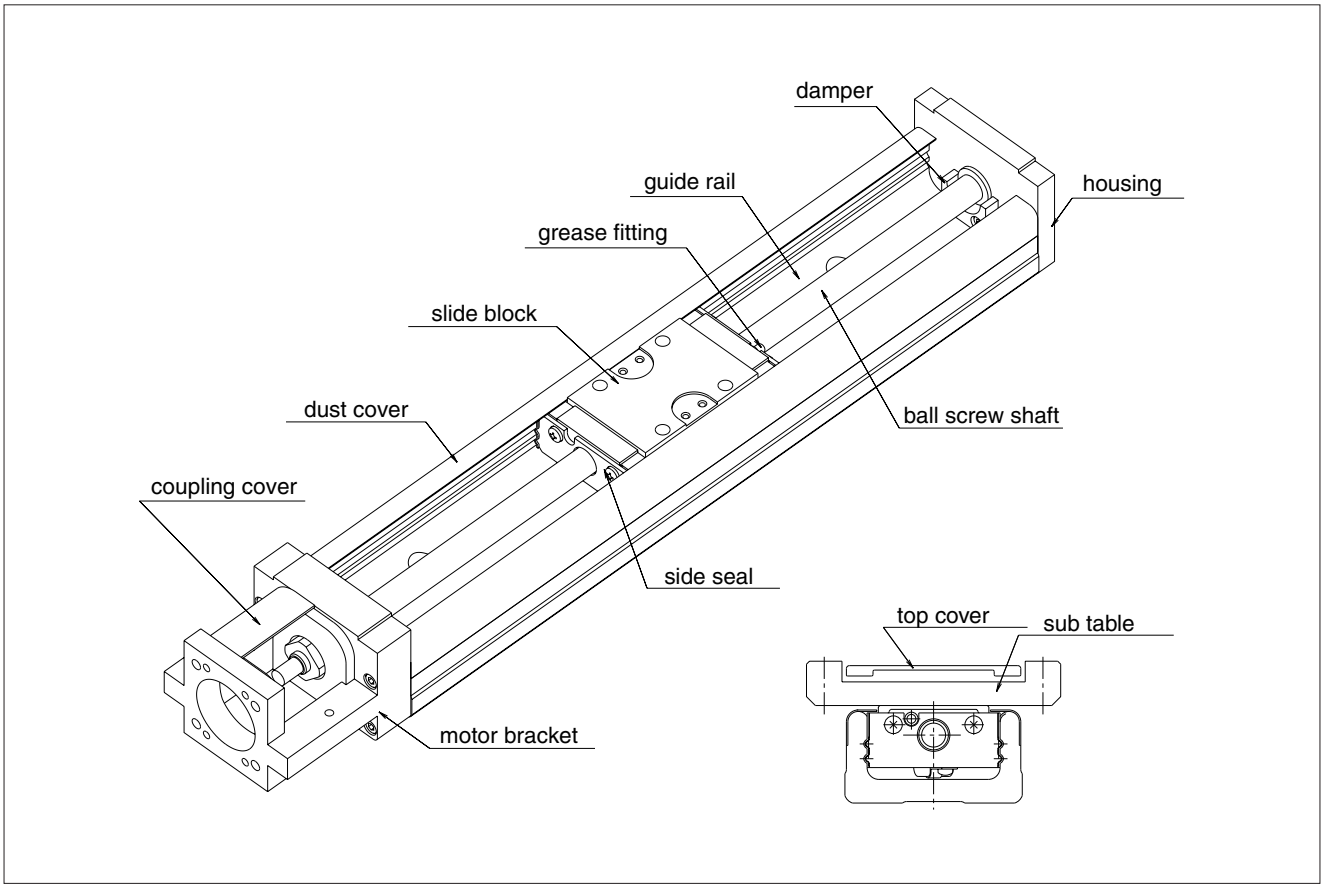

www.bergab.ru Берг АБ bergab@ya.ru Тел. (495)-228-06-21, факс (495) 223-3071

www.bergab.ru Берг АБ bergab@ya.ru Тел. (495)-228-06-21, факс (495) 223-3071

ADVANTAGES

Adjustment Free:

The integration of the slide guide and precision ball screw eliminates complex precision adjustment and reduces installation time dramatically.

High Rigidity:

"U" shaped guide rail provides very high rigidity despite its compact configuration and can be used for one-end supported application.(Reference Page I-9)

High Accuracy:

BG type contains four ball circuits and four-point contact ball grooves which contributes to its high rigidity. The combination of precision ground guide rail, slide block and precision ball screw provides high positioning accuracy.

Space Saving:

In comparison to conventional positioning tables, the BG type allows for compact designs and dramatic space saving. The "U" shaped guide rail and integrated slide block / precision ball screw nut make this possible.

Figure I-2 Ball Contact View

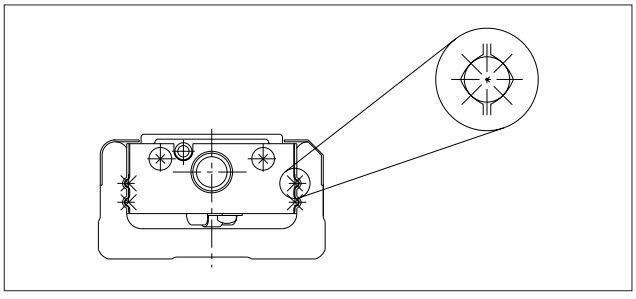

Figure I-3 Cross Sectional View

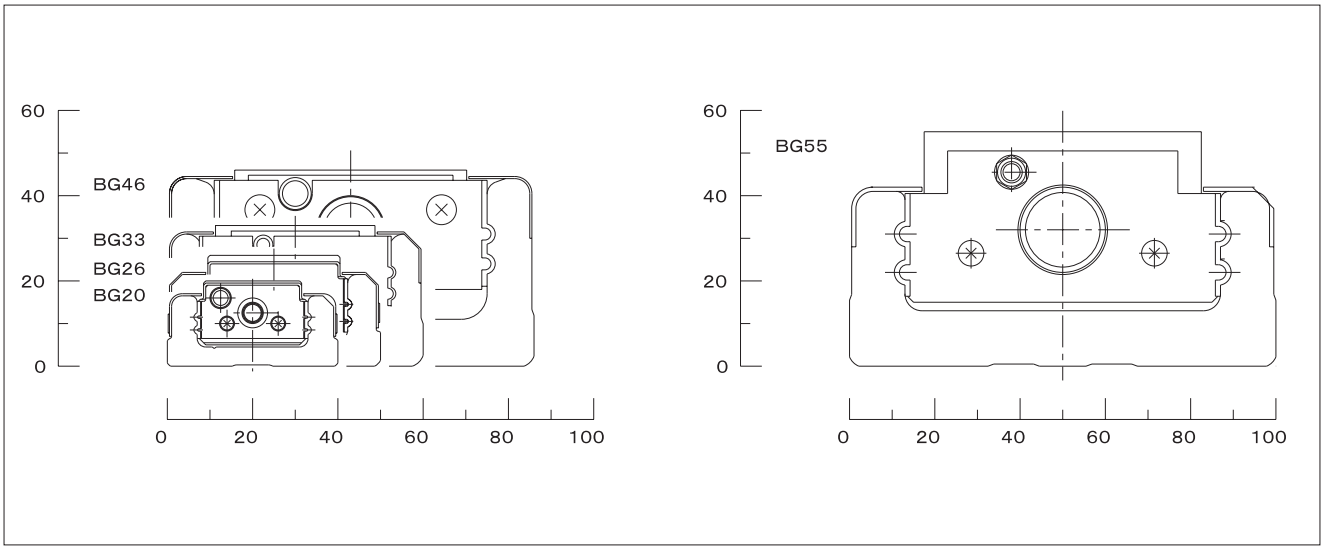

www.bergab.ru Берг АБ bergab@ya.ru Тел. (495)-228-06-21, факс (495) 223-3071

www.bergab.ru Берг АБ bergab@ya.ru Тел. (495)-228-06-21, факс (495) 223-3071

PART NUMBER SYSTEM

Part number for BG type is described as follows.

①	②	③	④		⑤	⑥		⑦	⑧	⑨		⑩
BG	20	01	A	-	100	H	/	A0			-	
		05	B		150	P		A1	C	S		P△
					200			A3		K		G▲
								A4				LB
								A5				PNP
								A6				
								A7				
								A8				
								A9				
								R0				

①	②	③	④		⑤	⑥		⑦	⑧	⑨		⑩
BG	26	02	A	-	150	H	/	A0			-	
		05	B		200	P		A1	C	S		P△
					250			A3		K		G▲
					300			A5				LB
								A6				PNP
								A7				
								A8				
								A9				
								R0				

①	②	③	④		⑤	⑥		⑦	⑧	⑨		⑩
BG	33	05	A	-	150	H	/	A0			-	
		10	B		200	P		A1	C	S		P△
			C		300			A2		H		G▲
			D		400			A3		K		LB
					500			A4				PNP
					600			A5				
								B1				
								R0				
								RA□				
								RB□				

①	②	③	④		⑤	⑥		⑦	⑧	⑨		⑩
BG	46	10	A	-	340	H	/	A0			-	
		20	B		440	P		A1	C	S		P△
			C		540			A2		H		G▲
			D		640			A3		K		LB
					740			A4				PNP
					840			B0				
					940			C0				
					1040			D0				
					1140			R0				
					1240			RA□				
								RB□				
								RC□				

①	②	③	④		⑤	⑥		⑦	⑧	⑨		⑩
BG	55	20	A	-	980	H	/	A0			-	
			B		1080	P		A1	C	S		P△
					1180			A2		H		G▲
					1280			A3		K		LB
					1380			A4				PNP
								R0				

① **BG type**

② **size**

③ **ball screw lead**

④ **type of block**

A	with 1 long block
B	with 2 long blocks ※
C	with 1 short block
D	with 2 short blocks ※

※ Driver block is located closest to motor mount bracket side.

⑤ **guide rail length**

⑥ **precision grade**

H	high grade
P	precision grade

⑦ **motor bracket (refer to page I-17～)**
The number in the square , □ ,after suffix RA , RB or RC indicates the mounting direction.

⑧ **cover**

none	without top-cover
C	with top-cover ※

※ top-cover and auxiliary table.

⑨ **Sensor**

none	without sensor
S	with slim type photo sensor
H	with close contact type photo sensor
K	with proximity sensor

⑩ **Option**

none	without option
P△	with positioning pin hole (※1)
G▲	with grease option (※2)
LB	with low temperature black chrome treatment (※3)
PNP	with PNP sensor (※4)

Case of multiple option, add + between each option
Example:(PS+LB+PNP)
※1, portion △ is S or W (see page I-38)
※2, portion ▲ is K, U, L or F (see page I-16)
Grease put in Guide, Ball screw, and Angular Bearing portion
※3, Apply it except aluminum parts and radial bearing
※4, Apply it except BG 20 and 26

www.bergab.ru Берг АБ bergab@ya.ru Тел. (495)-228-06-21, факс (495) 223-3071

www.bergab.ru Берг АБ bergab@ya.ru Тел. (495)-228-06-21, факс (495) 223-3071

SPECIFICATION

BG Type is categorized as either high grade or precision grade (P).

Table I-1 Specification

part number				BG2001		BG2005		BG2602		BG2605		BG3305		BG3310		BG4610		BG4620		BG5520	
precision grade				high	※precision	high	※precision	high	※precision	high	※precision	high	precision	high	precision	high	precision	high	precision	high	precision
guide	radial clearance		μm	-3~0	-6~-3	-3~0	-6~-3	-4~0	-8~-4	-4~0	-8~-4	-3~0	-7~-3	-3~0	-7~-3	-5~0	-11~-5	-5~0	-11~-5	-6~0	-18~-6
	basic dynamic load	C	kN	4.27				7.87				12.6				29.8				43.2	
long block	basic static load	C_O	kN	7.89				14.98				22.7				51.2				74.0	
long block	allowable static moment	M_P	N·m	35				99				181				610				1,088	
long block	allowable static moment	M_{2P}	N·m	199				550				1,035				3,285				5,465	
long block	allowable static moment	M_Y	N·m	42				118				215				727				1,297	
long block	allowable static moment	M_{2Y}	N·m	237				656				1,233				3,914				6,513	
long block	allowable static moment	M_R	N·m	101				255				500				1,612				2,701	
long block	allowable static moment	M_{2R}	N·m	201				509				1,000				3,224				5,402	
short block	basic dynamic load	C	kN	—				—				7.8				19.9				—	
short block	basic static load	C_O	kN	—				—				11.4				28.8				—	
short block	allowable static moment	M_P	N·m	—				—				49				207				—	
short block	allowable static moment	M_{2P}	N·m	—				—				368				1,336				—	
short block	allowable static moment	M_Y	N·m	—				—				59				246				—	
short block	allowable static moment	M_{2Y}	N·m	—				—				439				1,593				—	
short block	allowable static moment	M_R	N·m	—				—				250				907				—	
short block	allowable static moment	M_{2R}	N·m	—				—				500				1,814				—	
ball screw	shaft diameter		mm	6				8				10				15				20	
ball screw	lead		mm	1		5		2		5		5		10		10		20		20	
ball screw	spacer-ball ratio		—	—				—				—	1 : 1	—	1 : 1	—	1 : 1	—	2 : 1	—	2 : 1
ball screw	basic dynamic load	Ca	kN	0.63		0.65		2.60		2.35		3.35	2.11	2.20	1.39	4.40	2.77	4.40	3.36	5.40	4.12
ball screw	basic static load	Coa	kN	1.34		0.92		3.64		3.30		5.90	2.95	3.50	1.75	7.90	3.95	7.90	5.27	10.50	7.00
bearing support	part Number		—	AC5-14DF				AC6-16DF				70M8DF/GMP5				7001T2DF/GMP5				7002T2DF/GMP5	
bearing support	basic dynamic load	Cb	kN	1.31				1.79				4.40				6.77				7.74	
bearing support	basic static load	Cob	kN	1.25				1.76				4.36				7.45				9.50	

*Please contact NB for details when using BG20-P & BG26-P grade series with short and frequent stroke. (Stroke distance : BG2001＝ 7 mm or less, BG2005 ＝ 25 mm or less, BG2602＝ 14 mm or less and BG2605＝ 25 mm or less)

Figure I-4 Direction of Moment

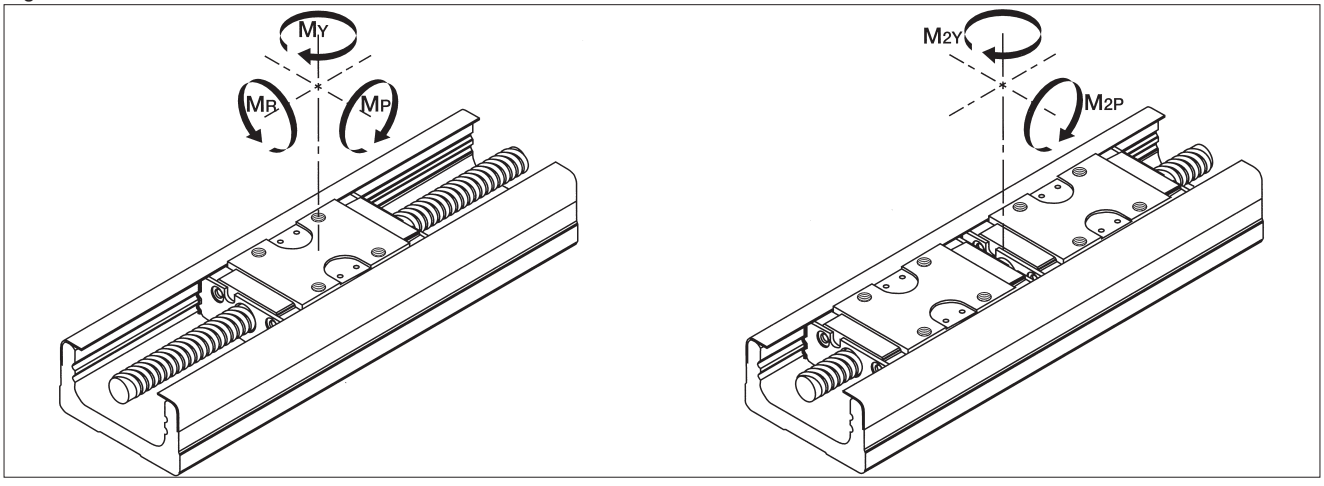

M_{2P} and M_{2Y} account for the allowable static moment when 2 blocks are used together. (As shown in Figure I-4)

www.bergab.ru Берг АБ bergab@ya.ru Тел. (495)-228-06-21, факс (495) 223-3071

www.bergab.ru Берг АБ bergab@ya.ru Тел. (495)-228-06-21, факс (495) 223-3071

ALLOWABLE SPEED

Allowable speed of BG type is subject to the type of motor and operating conditions. The speed may also be limited by the critical speed of the ball screw. Use caution when operating at high speeds or using long rails.

Table I-2 Allowable Speed

part number	rail length mm	speed mm/sec
BG2001	100	187
	150	
	200	
BG2005	100	925
	150	
	200	
BG2602	150	281
	200	
	250	
	300	
BG2605	150	694
	200	
	250	
	300	
BG3305	150	550
	200	
	300	
	400	
	500	460
	600	310

part number	rail length mm	speed mm/sec
BG3310	150	1,100
	200	
	300	
	400	
	500	930
	600	620
BG4610	340	740
	440	
	540	
	640	
	740	650
	840	500
	940	390
	1040	315
	1140	260
	1240	220

part number	rail length mm	speed mm/sec
BG4620	340	1,480
	440	
	540	
	640	
	740	1,300
	840	1,000
	940	780
	1040	630
	1140	520
	1240	440
BG5520	980	1,120
	1,080	910
	1,180	750
	1,280	630
	1,380	530

Figure I-5 Guide Rail Length and Allowable Speed

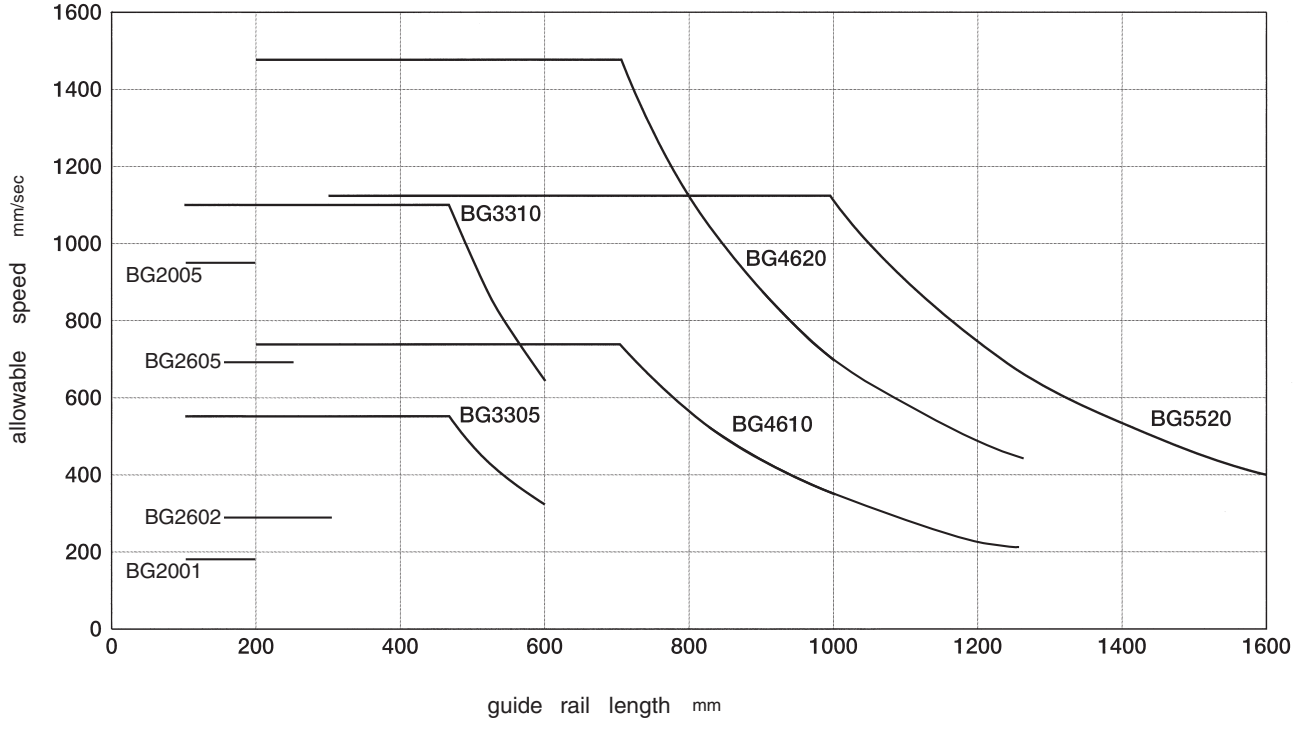

www.bergab.ru Берг АБ bergab@ya.ru Тел. (495)-228-06-21, факс (495) 223-3071

www.bergab.ru Берг АБ bergab@ya.ru Тел. (495)-228-06-21, факс (495) 223-3071

MASS

The mass of the BG type is listed in Table I-3 and slide block mass is listed in Table I-4.

Table I-3 Mass of BG type Actuator

unit / kg

part number	rail length mm	without top-cover				with top-cover				rail length mm
		long block		short block		long block		short block		
		1block A	2block B	1block C	2block D	1block A	2block B	1block C	2block D	
BG20	100	0. 45	0. 52	—	—	0. 50	0. 61	—	—	100
	150	0. 58	0. 65	—	—	0. 63	0. 74	—	—	150
	200	0. 71	0. 78	—	—	0. 77	0. 88	—	—	200
BG26	150	0. 93	1. 10	—	—	1. 07	1. 31	—	—	150
	200	1. 14	1. 31	—	—	1. 30	1. 54	—	—	200
	250	1. 36	1. 53	—	—	1. 53	1. 78	—	—	250
	300	1. 57	1. 74	—	—	1. 76	2. 01	—	—	300
BG33	150	1. 6	—	1. 5	1. 7	1. 8	—	1. 6	1. 9	150
	200	2. 0	—	1. 8	2. 0	2. 1	—	2. 0	2. 2	200
	300	2. 6	2. 9	2. 5	2. 7	2. 8	3. 2	2. 6	2. 9	300
	400	3. 2	3. 6	3. 1	3. 3	3. 5	3. 9	3. 3	3. 5	400
	500	3. 9	4. 2	3. 8	3. 9	4. 2	4. 6	4. 0	4. 2	500
	600	4. 6	4. 9	4. 4	4. 6	4. 9	5. 3	4. 7	4. 9	600
BG46	340	6. 5	7. 5	6. 0	6. 5	7. 0	8. 0	6. 5	7. 0	340
	440	8. 0	8. 5	7. 5	8. 0	8. 5	9. 5	8. 0	8. 5	440
	540	9. 0	10. 0	8. 5	9. 5	10. 0	11. 0	9. 5	10. 0	540
	640	10. 5	11. 5	10. 0	10. 5	11. 0	12. 5	10. 5	11. 5	640
	740	12. 0	13. 0	11. 5	12. 0	12. 5	14. 0	12. 0	13. 0	740
	840	13. 0	14. 0	13. 0	13. 5	14. 0	15. 5	13. 5	14. 0	840
	940	14. 5	15. 5	14. 0	14. 5	15. 5	16. 5	15. 0	15. 5	940
	1, 040	16. 0	17. 0	15. 5	16. 0	17. 0	18. 0	16. 5	17. 0	1, 040
	1, 140	17. 5	18. 0	17. 0	17. 5	18. 5	19. 5	18. 0	18. 5	1, 140
	1, 240	18. 5	19. 5	18. 5	19. 0	19. 5	21. 0	19. 0	20. 0	1, 240
BG55	980	20	22	—	—	21	24	—	—	980
	1, 080	22	24	—	—	23	26	—	—	1, 080
	1, 180	23	25	—	—	25	27	—	—	1, 180
	1, 280	25	27	—	—	27	29	—	—	1, 280
	1, 380	27	29	—	—	29	31	—	—	1, 380

Table I-4 Mass of Blocks

unit / kg

part number	without top-cover		with top-cover	
	long block	short block	long block	short block
BG20	0.07	—	0.11	—
BG26	0.17	—	0.24	—
BG33	0.3	0.15	0.4	0.2
BG46	0.9	0.5	1.2	0.7
BG55	1.7	—	2.3	—

Mass stated "with top-cover" includes mass of auxiliary table.

www.bergab.ru Берг АБ bergab@ya.ru Тел. (495)-228-06-21, факс (495) 223-3071

www.bergab.ru Берг АБ bergab@ya.ru Тел. (495)-228-06-21, факс (495) 223-3071

INERTIA

Inertia of the slide block and ball screw of BG type are shown in Table I-5.

Table I-5 Inertia

unit / kg•m^2

part number	rail length mm-7	without top-cover				with top-cover				rail length mm
		long block		short block		long block		short block		
		1block A	2block B	1block C	2block D	1block A	2block B	1block C	2block D	
BG2001	100	1.34×10^{-7}	1.36×10^{-7}	—	—	1.36×10^{-7}	1.40×10^{-7}	—	—	100
	150	1.83×10^{-7}	1.85×10^{-7}	—	—	1.85×10^{-7}	1.89×10^{-7}	—	—	150
	200	2.33×10^{-7}	2.35×10^{-7}	—	—	2.35×10^{-7}	2.39×10^{-7}	—	—	200
BG2005	100	1.76×10^{-7}	2.21×10^{-7}	—	—	2.00×10^{-7}	2.69×10^{-7}	—	—	100
	150	2.26×10^{-7}	2.70×10^{-7}	—	—	2.50×10^{-7}	3.18×10^{-7}	—	—	150
	200	2.76×10^{-7}	3.20×10^{-7}	—	—	3.00×10^{-7}	3.68×10^{-7}	—	—	200
BG2602	150	6.08×10^{-7}	6.26×10^{-7}	—	—	6.16×10^{-7}	6.40×10^{-7}	—	—	150
	200	7.65×10^{-7}	7.83×10^{-7}	—	—	7.72×10^{-7}	7.97×10^{-7}	—	—	200
	250	9.22×10^{-7}	9.39×10^{-7}	—	—	9.29×10^{-7}	9.54×10^{-7}	—	—	250
	300	1.08×10^{-6}	1.10×10^{-6}	—	—	1.09×10^{-6}	1.11×10^{-6}	—	—	300
BG2605	150	6.99×10^{-7}	8.07×10^{-7}	—	—	7.44×10^{-7}	8.98×10^{-7}	—	—	150
	200	8.56×10^{-7}	9.63×10^{-7}	—	—	9.01×10^{-7}	1.05×10^{-6}	—	—	200
	250	1.01×10^{-6}	1.12×10^{-6}	—	—	1.06×10^{-6}	1.21×10^{-6}	—	—	250
	300	1.17×10^{-6}	1.28×10^{-6}	—	—	1.21×10^{-6}	1.37×10^{-6}	—	—	300
BG3305	150	1.64×10^{-6}	—	1.56×10^{-6}	1.64×10^{-6}	1.71×10^{-6}	—	1.60×10^{-6}	1.71×10^{-6}	150
	200	2.02×10^{-6}	—	1.94×10^{-6}	2.03×10^{-6}	2.09×10^{-6}	—	1.98×10^{-6}	2.10×10^{-6}	200
	300	2.79×10^{-6}	2.99×10^{-6}	2.71×10^{-6}	2.79×10^{-6}	2.86×10^{-6}	3.13×10^{-6}	2.75×10^{-6}	2.86×10^{-6}	300
	400	3.55×10^{-6}	3.75×10^{-6}	3.48×10^{-6}	3.56×10^{-6}	3.62×10^{-6}	3.89×10^{-6}	3.51×10^{-6}	3.63×10^{-6}	400
	500	4.32×10^{-6}	4.52×10^{-6}	4.24×10^{-6}	4.32×10^{-6}	4.39×10^{-6}	4.66×10^{-6}	4.28×10^{-6}	4.39×10^{-6}	500
	600	5.08×10^{-6}	5.28×10^{-6}	5.01×10^{-6}	5.09×10^{-6}	5.15×10^{-6}	5.42×10^{-6}	5.04×10^{-6}	5.16×10^{-6}	600
BG3310	150	2.19×10^{-6}	—	1.88×10^{-6}	2.21×10^{-6}	2.47×10^{-6}	—	2.02×10^{-6}	2.49×10^{-6}	150
	200	2.57×10^{-6}	—	2.27×10^{-6}	2.59×10^{-6}	2.85×10^{-6}	—	2.40×10^{-6}	2.87×10^{-6}	200
	300	3.34×10^{-6}	4.14×10^{-6}	3.03×10^{-6}	3.36×10^{-6}	3.61×10^{-6}	4.69×10^{-6}	3.17×10^{-6}	3.64×10^{-6}	300
	400	4.10×10^{-6}	4.90×10^{-6}	3.80×10^{-6}	4.12×10^{-6}	4.38×10^{-6}	5.46×10^{-6}	3.94×10^{-6}	4.40×10^{-6}	400
	500	4.87×10^{-6}	5.67×10^{-6}	4.56×10^{-6}	4.89×10^{-6}	5.15×10^{-6}	6.22×10^{-6}	4.70×10^{-6}	5.17×10^{-6}	500
	600	5.63×10^{-6}	6.43×10^{-6}	5.33×10^{-6}	5.65×10^{-6}	5.91×10^{-6}	6.99×10^{-6}	5.47×10^{-6}	5.93×10^{-6}	600
BG4610	340	1.79×10^{-5}	2.02×10^{-5}	1.69×10^{-5}	1.82×10^{-5}	1.87×10^{-5}	2.17×10^{-5}	1.74×10^{-5}	1.92×10^{-5}	340
	440	2.18×10^{-5}	2.41×10^{-5}	2.08×10^{-5}	2.20×10^{-5}	2.25×10^{-5}	2.56×10^{-5}	2.13×10^{-5}	2.31×10^{-5}	440
	540	2.57×10^{-5}	2.79×10^{-5}	2.46×10^{-5}	2.59×10^{-5}	2.64×10^{-5}	2.95×10^{-5}	2.52×10^{-5}	2.69×10^{-5}	540
	640	2.95×10^{-5}	3.18×10^{-5}	2.85×10^{-5}	2.98×10^{-5}	3.03×10^{-5}	3.33×10^{-5}	2.90×10^{-5}	3.08×10^{-5}	640
	740	3.34×10^{-5}	3.57×10^{-5}	3.24×10^{-5}	3.37×10^{-5}	3.42×10^{-5}	3.72×10^{-5}	3.29×10^{-5}	3.47×10^{-5}	740
	840	3.73×10^{-5}	3.96×10^{-5}	3.63×10^{-5}	3.75×10^{-5}	3.80×10^{-5}	4.11×10^{-5}	3.67×10^{-5}	3.83×10^{-5}	840
	940	4.12×10^{-5}	4.35×10^{-5}	4.02×10^{-5}	4.14×10^{-5}	4.19×10^{-5}	4.50×10^{-5}	4.06×10^{-5}	4.22×10^{-5}	940
	1,040	4.50×10^{-5}	4.74×10^{-5}	4.41×10^{-5}	4.53×10^{-5}	4.58×10^{-5}	4.88×10^{-5}	4.44×10^{-5}	4.61×10^{-5}	1,040
	1,140	4.89×10^{-5}	5.12×10^{-5}	4.79×10^{-5}	4.92×10^{-5}	4.97×10^{-5}	5.27×10^{-5}	4.83×10^{-5}	4.99×10^{-5}	1,140
	1,240	5.28×10^{-5}	5.51×10^{-5}	5.18×10^{-5}	5.30×10^{-5}	5.35×10^{-5}	5.66×10^{-5}	5.22×10^{-5}	5.38×10^{-5}	1,240
BG4620	340	2.47×10^{-5}	3.39×10^{-5}	2.07×10^{-5}	2.58×10^{-5}	2.78×10^{-5}	3.99×10^{-5}	2.27×10^{-5}	2.98×10^{-5}	340
	440	2.86×10^{-5}	3.77×10^{-5}	2.46×10^{-5}	2.96×10^{-5}	3.17×10^{-5}	4.38×10^{-5}	2.66×10^{-5}	3.37×10^{-5}	440
	540	3.25×10^{-5}	4.16×10^{-5}	2.84×10^{-5}	3.35×10^{-5}	3.55×10^{-5}	4.77×10^{-5}	3.05×10^{-5}	3.76×10^{-5}	540
	640	3.64×10^{-5}	4.55×10^{-5}	3.23×10^{-5}	3.74×10^{-5}	3.94×10^{-5}	5.16×10^{-5}	3.44×10^{-5}	4.14×10^{-5}	640
	740	4.03×10^{-5}	4.94×10^{-5}	3.62×10^{-5}	4.13×10^{-5}	4.33×10^{-5}	5.55×10^{-5}	3.82×10^{-5}	4.53×10^{-5}	740
	840	4.41×10^{-5}	5.34×10^{-5}	4.02×10^{-5}	4.51×10^{-5}	4.71×10^{-5}	5.93×10^{-5}	4.17×10^{-5}	4.82×10^{-5}	840
	940	4.80×10^{-5}	5.72×10^{-5}	4.41×10^{-5}	4.90×10^{-5}	5.09×10^{-5}	6.32×10^{-5}	4.56×10^{-5}	5.21×10^{-5}	940
	1,040	5.19×10^{-5}	6.11×10^{-5}	4.80×10^{-5}	5.29×10^{-5}	5.48×10^{-5}	6.71×10^{-5}	4.95×10^{-5}	5.59×10^{-5}	1,040
	1,140	5.57×10^{-5}	6.50×10^{-5}	5.18×10^{-5}	5.68×10^{-5}	5.87×10^{-5}	7.09×10^{-5}	5.34×10^{-5}	5.98×10^{-5}	1,140
	1,240	5.96×10^{-5}	6.89×10^{-5}	5.57×10^{-5}	6.06×10^{-5}	6.26×10^{-5}	7.48×10^{-5}	5.72×10^{-5}	6.37×10^{-5}	1,240
BG5520	980	1.46×10^{-4}	1.64×10^{-4}	—	—	1.52×10^{-4}	1.76×10^{-4}	—	—	980
	1,080	1.59×10^{-4}	1.76×10^{-4}	—	—	1.65×10^{-4}	1.88×10^{-4}	—	—	1,080
	1,180	1.71×10^{-4}	1.88×10^{-4}	—	—	1.77×10^{-4}	2.00×10^{-4}	—	—	1,180
	1,280	1.83×10^{-4}	2.00×10^{-4}	—	—	1.89×10^{-4}	2.12×10^{-4}	—	—	1,280
	1,380	1.95×10^{-4}	2.13×10^{-4}	—	—	2.01×10^{-4}	2.25×10^{-4}	—	—	1,380

www.bergab.ru Берг АБ bergab@ya.ru Тел. (495)-228-06-21, факс (495) 223-3071

www.bergab.ru Берг АБ bergab@ya.ru Тел. (495)-228-06-21, факс (495) 223-3071

RIGIDITY

By utilizing four-point contact structure, the BG type provides extremely high rigidity. Figure I-6 shows deflection of each size of long block against radial load. Table I-6. shows the geometrical moment inertia of guide rails.

Figure I-6 Block Deflection against Radial Load

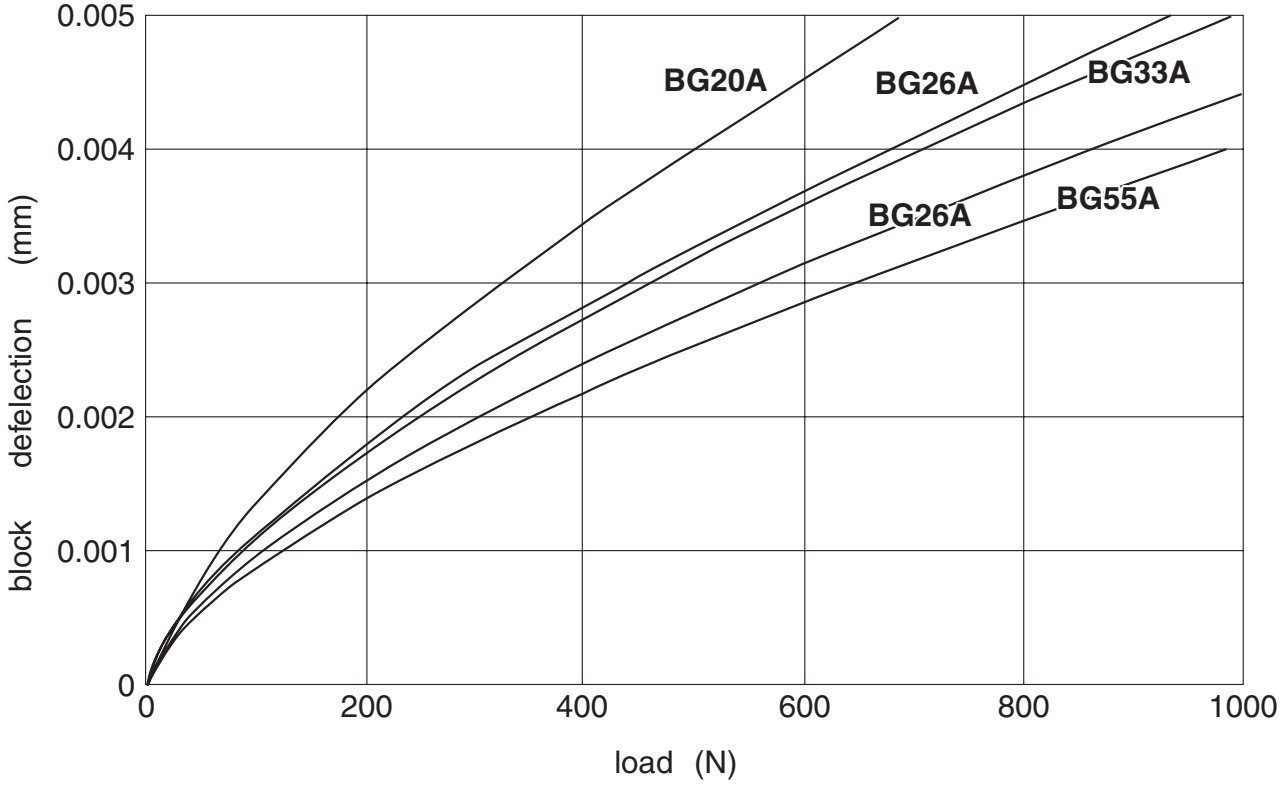

Table I-6 Geometrical Moment Inertia of Guide Rails

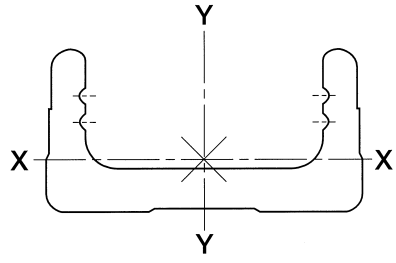

part number	geometrical moment inertia (mm^4)		mass (kg/100mm)
	IX(X Axis)	IY(Y Axis)	
BG20	6.50×10^3	6.00×10^4	0.25
BG26	1.69×10^4	1.47×10^5	0.38
BG33	5.11×10^4	3.42×10^5	0.60
BG46	2.42×10^5	1.49×10^6	1.24
BG55	2.29×10^5	2.28×10^6	1.50

www.bergab.ru Берг АБ bergab@ya.ru Тел. (495)-228-06-21, факс (495) 223-3071

www.bergab.ru Берг АБ bergab@ya.ru Тел. (495)-228-06-21, факс (495) 223-3071

ACCURACY

Table I-7 shows accuracy of BG type.

Table I-7 Accuracy

part number	rail length	positioning repeatability μm		positioning accuracy μm		running parallelism μm		backlash μm		※starting torque N・m	
		high	precision	high	precision	high	precision	high	precision	high	precision
BG 20	100	±3	±1	50	20	25	10	5	2	0.01	0.012
	150										
	200										
BG 26	150	±3	±1	50	20	25	10	5	2	0.015	0.04
	200										
	250										
	300										
BG 33	150	±3	±1	30	15	25	10	5	2	0.07	0.15
	200										
	300			35	20						
	400										
	500			40	25	35	15				
	600		–	70	–		–		–		–
BG 46	340	±3	±1	35	20	35	15	5	2	0.10	0.15
	440										
	540			40	25						
	640										0.17
	740			50	30	40	20				
	840		–	80	–	50	–		–		–
	940										
	1,040										
	1,140			100							
	1,240										
BG 55	980	±3	±1	80	35	50	25	5	2	0.12	0.17
	1,080										
	1,180			100	40		30				0.20
	1,280		–		–		–		–		–
	1,380										

Above values are measured in conditions using our selected motors.
※Above specifications are based on using NB standard grease. other grease may cause deviations.

www.bergab.ru Берг АБ bergab@ya.ru Тел. (495)-228-06-21, факс (495) 223-3071

www.bergab.ru Берг АБ bergab@ya.ru Тел. (495)-228-06-21, факс (495) 223-3071

Positioning Repeatability:

Establish an arbitrary point. From one end, position the inner block at this point and measure the stop position. Repeat the positioning and measurement process 7 times. Repeat the same process with respect to the established set point at the midpoint and near both ends of travel. Take the maximum measurement and divide the maximum difference by 2 and indicate it with either a positive or negative sign as the test results.

Positioning Repeatability=
±1/2{(Maximum value of ℓ n)-(Minimum value of ℓ n)}

Positioning Accuracy:

Positioning is performed in only one direction and the resulting position is set as the reference measurement point. Calculate the difference between the length of actual travel and the commanded travel length. Continuing in the same direction (without returning to the start point) repeat this process randomly several times until reaching limit of full stroke. Express the accuracy by the absolute maximum difference.

Positioning accuracy = ($\Delta\ell$ n)max

Running Parallelism:

Making sure that the surface plate is absolutely flat. Indicator placed on the center of block, run the block over the entire length of travel and use the maximum difference in readings as the test results.

Backlash:

Use the feed screw to move the block a little. Take the test indicator reading and make it the reference point. While in this position, load the block in the same direction without using the feed screw. Release the load and read the return. Calculate the difference between the reference point. Repeat the same process at the midpoint and near both ends. Use the maximum difference as the test result.

Backlash = ($\Delta\ell$)max

Figure I-7 Positioning Repeatability

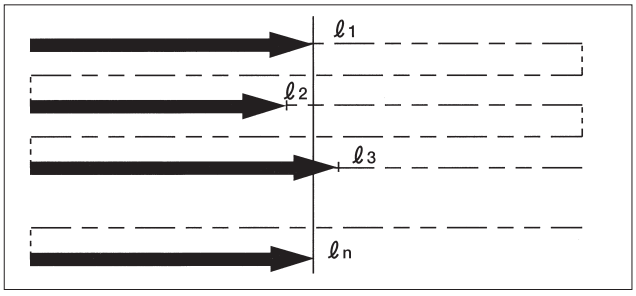

Figure I-8 Positioning Accuracy

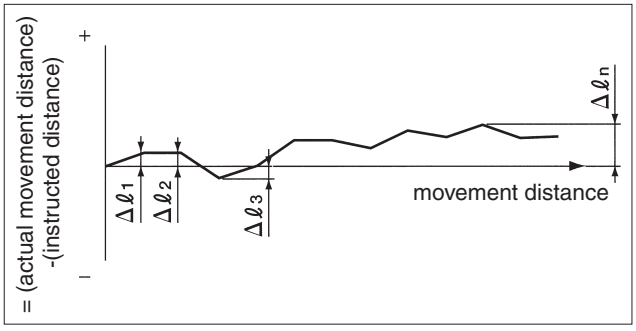

Figure I-9 Running Parallelism

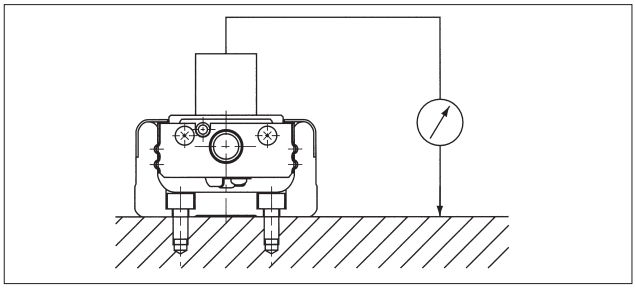

Figure I-10 Backlash

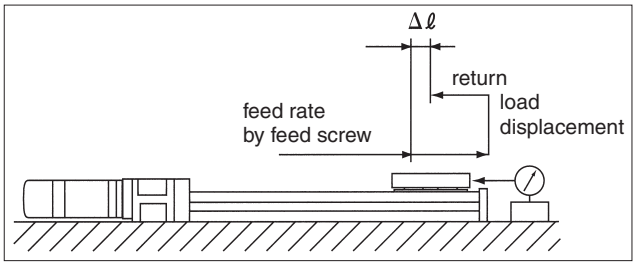

www.bergab.ru Берг АБ bergab@ya.ru Тел. (495)-228-06-21, факс (495) 223-3071

www.bergab.ru Берг АБ bergab@ya.ru Тел. (495)-228-06-21, факс (495) 223-3071

RATED LIFE

To obtain the rated life of the BG type, calculate the rated life of the guide section, and ball screw section or support section. Use the minimum value as the rated life of the BG type. Use the following equation for calculating the rated life.

A. Life of Guide portion

Use the following formula for calculating the rated life of Guide portion.

$$L_G = \left(\frac{fc}{fw} \cdot \frac{C}{P_T}\right)^3 \cdot 50 \cdots\cdots (1)$$

L_G : Rated life (km) fc : contact coefficient (see Table I-8)
fw : load coefficient (see Table I-9) C : basic dynamic load rating (N)
P_T : calculated load applied to one block (N)

A.1. Calculation of P_T

Before calculating the rated life using the equation (1), the calculated load applied to one block (P_T) needs to be obtained in consideration of the moment load, etc. that will be actually applied.

For rapidly-accelerating or short stroke motion, P_T needs to be calculated with acceleration taken into consideration. The calculation of this acceleration will be carried out for the mass applied to BG.

Obtain the calculated load during uniform motion, accelerating, and decelerating, and use the average value of the three as P_T.

For the calculation of P_T, select an appropriate equation depending on the installation conditions of the guide.

It is also possible to calculate P_T without including the effect of acceleration by using the equation "$P_T = P_Tc$ (see the equations (2), (5), and (8)). In this case, however, the obtained value is an approximate one, so a selection with sufficient margin is recommended.

Table I-8 Contact Coefficient (fc)

number of blocks used in close contact on one axis	contact coefficient (fc)
1	1.0
2	0.81

Table I-9 Load Coefficient (fw)

use conditions		load coefficient (fw)
vibration, impact	velocity	
none	15 m/min. or less	1.0～1.5
low	60 m/min. or less	1.5～2.0
high	60 m/min. or more	2.0～3.5

Table I-10 Moment Equivalent Coefficient

	Ep(E2p)	Ey(E2p)	Er(E2r)
BG20＊＊A	2.25×10^{-1}	1.89×10^{-1}	7.84×10^{-2}
BG20＊＊B	3.98×10^{-2}	3.34×10^{-2}	3.92×10^{-2}
BG26＊＊A	1.51×10^{-1}	1.27×10^{-1}	5.88×10^{-2}
BG26＊＊B	2.72×10^{-2}	2.28×10^{-2}	2.94×10^{-2}
BG33＊＊A	1.26×10^{-1}	1.06×10^{-1}	4.55×10^{-2}
BG33＊＊B	2.20×10^{-2}	1.84×10^{-2}	2.27×10^{-2}
BG33＊＊C	2.31×10^{-1}	1.94×10^{-1}	4.55×10^{-2}
BG33＊＊D	3.09×10^{-2}	2.59×10^{-2}	2.27×10^{-2}
BG46＊＊A	8.39×10^{-2}	7.04×10^{-2}	3.17×10^{-2}
BG46＊＊B	1.56×10^{-2}	1.31×10^{-2}	1.59×10^{-2}
BG46＊＊C	1.39×10^{-1}	1.17×10^{-1}	3.17×10^{-2}
BG46＊＊D	2.15×10^{-2}	1.81×10^{-1}	1.59×10^{-2}
BG55＊＊A	6.80×10^{-2}	5.71×10^{-2}	2.74×10^{-2}
BG55＊＊B	1.35×10^{-2}	1.14×10^{-2}	1.37×10^{-2}

* For the two-block specifications, the coefficient is that measured when the two blocks are in close contact.

www.bergab.ru Берг АБ bergab@ya.ru Тел. (495)-228-06-21, факс (495) 223-3071

www.bergab.ru Берг АБ bergab@ya.ru Тел. (495)-228-06-21, факс (495) 223-3071

A.1.a P_T for Horizontal Move (Horizontal Mounting)

i)during uniform motion(P_{TC})

$$P_{TC}=\frac{1}{n}\cdot W+Ep\cdot Mp_L+Ey\cdot My_L+Er\cdot Mr_L \cdots\cdots (2)$$

ii)during accelerating(P_{Ta})

$$P_{Ta}=\frac{1}{n}\cdot W+Ep(Mp_L+m\cdot \alpha_a\cdot Z)+Ey(My_L+m\cdot \alpha_a\cdot X)+Er\cdot Mr_L \cdots\cdots (3)$$

Note that the values of (Mp_L + m・α_a・Z) and (My_L + m・α_a・X) will be treated as 0 (zero) when the calculated value is negative.

iii)during decelerating(P_{Td})

$$P_{Td}=\frac{1}{n}\cdot W+Ep(Mpl+m\cdot \alpha_d\cdot Z)+Ey(Mpl+m\cdot \alpha_d\cdot X)+Er\cdot Mr_L \cdots\cdots (4)$$

Note that the values of (Mpl + m・α_d・Z) and (Mpl + m・α_d・X) will be treated as 0 (zero) when the calculated value is negative.

Figure I-11

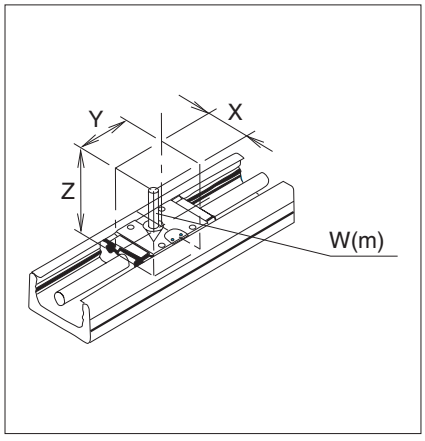

In case of load coming from different direction other than the direction shown in the drawing W(m), please contact with NB.

P_{TC}:calculated load applied to a block during uniform motion (N) P_{Ta}:calculated load applied to a block during accelerating (N)
P_{Td}:calculated load applied to a block during decelerating (N) n:number of blocks of BG W:applied load (N) m:carrying mass (kg)
α_a:acceleration during accelerating (m/s^2) α_d:acceleration during decelerating (m/s^2)(the negative value) X:distance between the center of BG and the center of the carrying mass (mm)
Y:distance between the center of BG and the center of the carrying mass (mm) Z:distance between the center of BG ball screw and the center of the carrying mass (mm)
Ep:moment equivalent coefficient in the pitching direction (see Table I-10) Ey:moment equivalent coefficient in the yawing direction (see Table I-10)
Er:moment equivalent coefficient in the rolling direction (see Table I-10) M_{pL}:loaded moment in the pitching direction (N・mm)M_{pL}=W• Y
M_{yL}:loaded moment in the yawing direction (N・mm)M_{yL}=0 M_{rL}:loaded moment in the rolling direction (N・mm)M_{rL}=W• X * See Fig.I-4 for the direction of moment.

A.1.b P_T for Horizontal Move (Wall Mounting)

i)during uniform motion(P_{TC})

$$P_{TC}=\frac{1}{1.19\cdot n}\cdot W+Ep\cdot Mp_L+Ey\cdot My_L+Er\cdot Mr_L \cdots\cdots (5)$$

ii)during accelerating(P_{Ta})

$$P_{Ta}=\frac{1}{1.19\cdot n}\cdot W+Ep(Mp_L+m\cdot \alpha_d\cdot Z)+Ey(My_L+m\cdot \alpha_d\cdot X)+Er\cdot Mr_L \cdots\cdots (6)$$

Note that the values of (Mp_L + m・α_d・Z) and (My_L + m・α_d・X) will be treated as 0 (zero) when the calculated value is negative.

iii)during decelerating(P_{Td})

$$P_{Td}=\frac{1}{1.19\cdot n}\cdot W+Ep(Mp_L+m\cdot \alpha_d\cdot Z)+Ey(My_L+m\cdot \alpha_d\cdot X)+Er\cdot Mr_L \cdots\cdots (7)$$

Note that the values of (Mpl + m・α_d・Z) and (Mpl + m・α_d・X) will be treated as 0 (zero) when the calculated value is negative.

Figure I-12

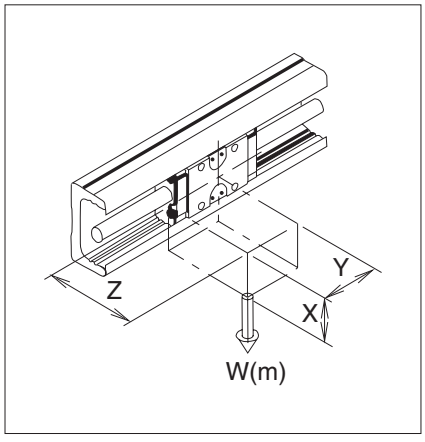

In case of load coming from different direction other than the direction shown in the drawing W(m), please contact with NB.

P_{TC}:calculated load applied to a block during uniform motion (N) P_{Ta}:calculated load applied to a block during accelerating (N)
P_{Td}:calculated load applied to a block during decelerating (N) n:number of blocks of BG W:applied load (N) m:carrying mass (kg)
α_a:acceleration during accelerating (m/s^2) α_d:acceleration during decelerating (m/s^2)(the negative value) X:distance between the center of BG and the center of the carrying mass (mm)
Y:distance between the center of BG and the center of the carrying mass (mm) Z:distance between the center of BG ball screw and the center of the carrying mass (mm)
Ep:moment equivalent coefficient in the pitching direction (see Table I-10) Ey:moment equivalent coefficient in the yawing direction (see Table I-10)
Er:moment equivalent coefficient in the rolling direction (see Table I-10) M_{pL}:loaded moment in the pitching direction (N・mm)M_{pL}=0
M_{yL}:loaded moment in the yawing direction (N・mm)M_{yL}=W• Y M_{rL}:loaded moment in the rolling direction (N・mm)M_{rL}=W• Z * See Fig.I-4 for the direction of moment.

www.bergab.ru Берг АБ bergab@ya.ru Тел. (495)-228-06-21, факс (495) 223-3071

www.bergab.ru Берг АБ bergab@ya.ru Тел. (495)-228-06-21, факс (495) 223-3071

A.1.c. P_T for Vertical Move

i) during uniform motion(P_{TC})

$$P_{TC}=Ep \cdot Mp_L+Ey \cdot My_L+Er \cdot Mr_L \cdots\cdots(8)$$

ii)during accelerating(P_{Ta})

$$P_{Ta}=Ep(Mp_L+m \cdot \alpha_a \cdot Z)+Ey(My_L+m \cdot \alpha_a \cdot X)+Er \cdot Mr_L \cdots\cdots(9)$$

Note that the values of ($Mp_L + m \cdot \alpha_a \cdot Z$) and ($My_L + m \cdot \alpha_a \cdot X$) will be treated as 0 (zero) when the calculated value is negative.

iii)during decelerating(P_{Td})

$$P_{Td}=Ep(Mp_L+m \cdot \alpha_d \cdot Z)+Ey(My_L+m \cdot \alpha_d \cdot X)+Er \cdot Mr_L \cdots\cdots(10)$$

Note that the values of ($Mpl + m \cdot \alpha_d \cdot Z$) and ($My_L + m \cdot \alpha_d \cdot X$) will be treated as 0 (zero) when the calculated value is negative.

Figure I-13

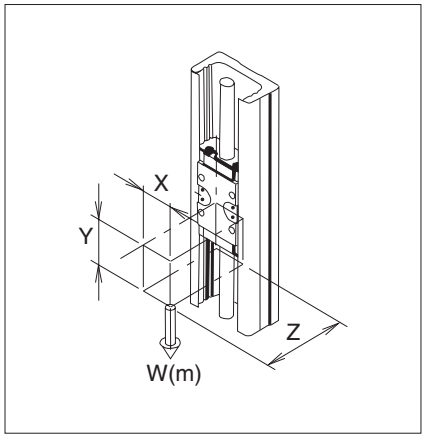

In case of load coming from different direction other than the direction shown in the drawing W(m), please contact with NB.

P_{TC}:calculated load applied to a block during uniform motion (N) P_{Ta}:calculated load applied to a block during accelerating (N)
P_{Td}:calculated load applied to a block during decelerating (N) n:number of blocks of BG W:applied load (N) m:carrying mass (kg)
α_a:acceleration during accelerating (m/s^2) α_d:acceleration during decelerating (m/s^2)(the negative value) X:distance between the center of BG and the center of the carrying mass (mm)
Y:distance between the center of BG and the center of the carrying mass (mm) Z:distance between the center of BG ball screw and the center of the carrying mass (mm)
Ep:moment equivalent coefficient in the pitching direction (see Table I-10) Ey:moment equivalent coefficient in the yawing direction (see Table I-10)
Er:moment equivalent coefficient in the rolling direction (see Table I-10) M_{pL}:loaded moment in the pitching direction (N・mm)M_{pL}=W• Z
M_{yL}:loaded moment in the yawing direction (N・mm)M_{yL}=W• X M_{rL}:loaded moment in the rolling direction (N・mm)M_{rL}=0 * See Fig.I-4 for the direction of moment.

A.1.d. Obtain the calculated load applied to a block (P_T) by calculating the average load of each motion using an appropriate equation among those shown above according to the application.

$$P_T = \sqrt[3]{\frac{1}{(S1+S2+S3)}(P_{Ta}^3 \cdot S1+P_{Tc}^3 \cdot S2+P_{Td}^3 \cdot S3)} \cdots\cdots(11)$$

P_T:calculated load applied to one block (N)
S1:travel distance during accelerating (mm) (see Table I-14)
S2:travel distance during uniform motion (mm) (see Table I-14)
S3:travel distance during decelerating (mm) (see Table I-14)
P_{Ta}:calculated load applied to one block during accelerating (N) : equation (3), (6), and (9)
P_{TC}:calculated load applied to one block during uniform motion (N) : equation (2), (5), and (8)
P_{Td}:calculated load applied to one block during decelerating (N) : equation (4), (7), and (10)

Figure I-14

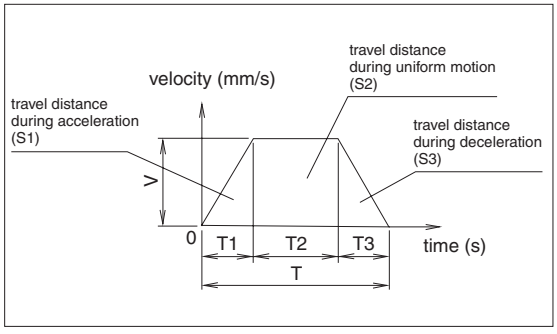

B. Life of the Ball Screw and Support Bearing

The life of ball screws and support bearings can be calculated using a common equation, as shown below. Compare the dynamic load rating of the ball screw and the support bearing and apply smaller value for calculation.

$$La=\left(\frac{1}{fw} \cdot \frac{Ca \text{ or } Cb}{Pa}\right)^3 \cdot \ell \cdots\cdots(12)$$

La:rated life (km) f_w:load coefficient (see Table I-9)
Ca:basic dynamic load rating of the ball screw (N)
Cb:basic dynamic load rating of the support bearing (N)
Pa:axis-directional load (N) ℓ:ball screw lead (mm)

B. 1. Calculation of Pa

Before calculating the life using the equation (12), calculate Pa with acceleration taken into consideration. Calculate the load in each axis direction during uniform motion, accelerating, and decelerating and the obtained value is used as Pa.

www.bergab.ru Берг АБ bergab@ya.ru Тел. (495)-228-06-21, факс (495) 223-3071

www.bergab.ru Берг АБ bergab@ya.ru Тел. (495)-228-06-21, факс (495) 223-3071

B.1.a For Horizontal Move

i) during uniform motion(Pac)

$$P_{ac}=\mu \cdot W+F+fb \cdot n \cdots\cdots (13)$$

ii)during accelerating(Paa)

$$P_{aa}=\mu \cdot W+F+fb \cdot n+(m+mb \cdot n)\alpha_a \cdots\cdots (14)$$

iii)during decelerating(Pad)

$$P_{ad}=\mu \cdot W+F+fb \cdot n-(m+mb \cdot n)\alpha_d \cdots\cdots (15)$$

Table I-11 Sliding Resistance (fb) of a Single Block (Seal Resistance)

unit: N

	high class (H)	precision class (P)
BG20	2.3	4.9
BG26	5.4	9.8
BG33	4.4	10.2
BG46	7.4	13.3
BG55	9	16

B.1.b For Vertical Move

i) during uniform motion(Pac)

$$P_{ac}=(m+mb \cdot n)g+F+fb \cdot n \cdots\cdots (16)$$

ii)during accelerating(Paa)

$$P_{aa}=(m+mb \cdot n)g+F+fb \cdot n+(m+mb \cdot n)\alpha_a \cdots\cdots (17)$$

iii)during decelerating(Pad)

$$P_{ad}=(m+mb \cdot n)g+F+fb \cdot n-(m+mb \cdot n)\alpha_d \cdots\cdots (18)$$

Pac:axis-directional load rating during uniform motion (N)
Paa:axis-directional load rating during accelerating (N)
Pad:axis-directional load rating during decelerating (N)
μ:friction coefficient W:load applied to a block (N)
F:external force (load) applied to the axis direction (N)
fb:sliding resistance of a single block (N) (see Table I-11)
n:number of blocks of BG m:carrying mass (kg)
mb:mass of a block of BG (kg) (see Table I-4)
α_a:acceleration during accelerating (m/s^3)
α_d:acceleration during decelerating (m/s^3)

B.1.c. Obtain the average axis-directional load (Pa) using an appropriate formula among those shown above depending on the application.

$$P_a=\sqrt[3]{\frac{1}{(S1+S2+S3)}(|P_{aa}|^3 \cdot S1+|P_{ac}|^3 \cdot S2+|P_{ad}|^3 \cdot S3)} \cdots\cdots (11)$$

Pa:average axis-directional load (N)
S1:travel distance during accelerating (mm) (see Table I-14)
S2:travel distance during uniform motion (mm) (see Table I-14)
S3:travel distance during decelerating (mm) (see Table I-14)
P_{aa}:axis-directional load during accelerating (N): formulas (14) and (17)
P_{ac}:axis-directional load during uniform motion (N): formulas (13) and (16)
P_{ad}:axis-directional load during decelerating (N): formulas (15) and (18)

www.bergab.ru Берг АБ bergab@ya.ru Тел. (495)-228-06-21, факс (495) 223-3071

www.bergab.ru Берг АБ bergab@ya.ru Тел. (495)-228-06-21, факс (495) 223-3071

LUBRICATION

- BG type contains a lithium-soap based grease. Apply similar grade of grease for the lubrication as required depending on your terms of operation.
- Use grease fitting to lubricate the guide block. For ball screw apply grease directly to surface of screw shaft.
- Unless otherwise instructed, a grease fitting is located as shown in Figure I-15.
- The greases can be changed to a high-function type by adding a special grease option code at the end of the part number. Please refer to Table I-12 for the type of the greases. Also refer to page Eng-20 for further detail of greases.

Figure I-15 Location of Grease Fitting

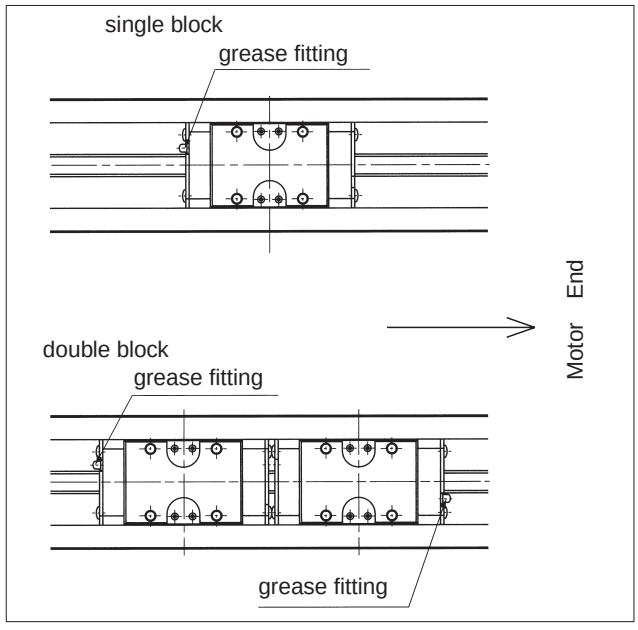

Table I-12 Applicable Greases

grease option code	features	product name
none (standard)		Multemp PS No.2 (KYODO YUSHI)
GK	urea-type low dust generation grease	K Grease
GU	urea-type low dust generation grease; low sliding resistance	KGU Grease
GL	lithium-type low dust generation grease	KGL Grease
GF	urea-type anti-fretting grease	KGF Grease

OPERATING TEMPERATURE

- Resin parts are assembled in BG type. The recommended ambient working temperature is 80 ℃ or lower. Apply 55℃ or lower for photo micro sensor option type.

PRECAUTION FOR USE

- Handle as a precision component to avoid excessive vibration or shock. Rough handling will affect the smooth traveling and may reduce the precision performance and/or life of the BG type.
- DO NOT DISASSEMBLE. The accuracy of BG type is adjusted by the factory when it is assembled.
- Allow for extra stroke distance. If the guide block repeatedly collides with damper, it may cause damage.
- Depending upon the operating environment, dust and debris may contaminate BG type and disrupt the ideal ball circulation and operating performance.

www.bergab.ru Берг АБ bergab@ya.ru Тел. (495)-228-06-21, факс (495) 223-3071

www.bergab.ru Берг АБ bergab@ya.ru Тел. (495)-228-06-21, факс (495) 223-3071

MOTOR BRACKET CONFIGURATIONS & APPLICABLE MOTORS

NB provides optional motor mount brackets to easily install most popular motors.

Table I-13 Applicable motors

Applicable motors		Part number		BG20	BG26	BG33	BG46	BG55
AC Servo motor	MATSUSHITA ELECTRIC	MSMA3AZ	30W	A3	A3	A2	C0	—
		MSMA5AZ	50W					
		MSMA01	100W					
		MSMA02	200W	—	—	—	A2	—
		MSMA04	400W					
		MSMA08	750W	—	—	—	A3	A2
	MITSUBISHI ELECTRIC	HC-AQ0135	10W	A8	A8	—	—	—
		HC-AQ0235	20W					
		HC-AQ0335	30W					
		HC-KFS(MFS,PQ)053	50W	A1	A1	A1	B0	—
		HC-KFS(MFS,PQ)13	100W					
		HC-KFS(MFS,PQ)23	200W	—	—	—	A1	A0
		HC-KFS(MFS,PQ)43	400W					
		HC-KFS(MFS)73	750W	—	—	—	A4	A1
		HA-FF053	50W	—	—	A3	A0	—
		HA-FF13	100W					
		HA-FF23	200W	—	—	—	A3	A2
		HA-FF33	300W					
	YASUKAWA ELECTRIC	SGMM-A131*	10W	A9	A9	—	—	—
		SGMM-A231*	20W					
		SGMM-A331*	30W					
		SGMAH-A3	30W	A1	A1	A1	B0	—
		SGMAS(SGMAH)-A5	50W					
		SGMAS(SGMAH)-01	100W					
		SGMAS-C2	150W	—	—	—	A1	A0
		SGMAS(SGMAH)-02	200W					
		SGMAS(SGMAH)-04	400W					
		SGMAS(SGMAH)-08	750W	—	—	—	A4	A1
	SANYO ELECTRIC	Q1AA04003D	30W	A1	A1	A1	B0	—
		Q1AA04005D	50W					
		Q1AA04010D	100W					
		Q1AA06020D	200W	—	—	—	A1	A0
		Q1AA06040D	400W					
		Q1AA07075D	750W	—	—	—	A4	A1
		Q2AA05005D	50W	—	—	A3	A0	—
		Q2AA05010D	100W					
		Q2AA07020D	200W	—	—	—	A3	A2
		Q2AA07030D	300W					
		Q2AA07040D	400W					
		Q2AA08050D	500W	—	—	—	—	A3
		Q2AA08075D	750W					
	CHIBA PRECISION	EA-2151	6W	A4	—	—	—	—
		EA-2169	10W					
		EA-2565	12W	A7	A7	—	—	—
		EA-2580	20W					
Stepper motor	ORIENTAL MOTOR	UPD534M-A	—	A5	A5	—	—	—
		PMU33AH	—	A6	A6	—	—	—
		UPK(RK)54,AS4	—	A5	A5	B1	—	—
		UPK(RK)56,AS6	—	—	—	A4	D0	—
		UPK(RK)59,AS9	—	—	—	—	—	A4
		PK26	—	—	—	A5	—	—

NB can provide other motor mount brackets. Please contact your NB representative for details.

www.bergab.ru Берг АБ bergab@ya.ru Тел. (495)-228-06-21, факс (495) 223-3071

www.bergab.ru Берг АБ bergab@ya.ru Тел. (495)-228-06-21, факс (495) 223-3071

BG20

Figures inside( ) indicates mass of the motor mount adapter plate.

Motor Bracket A0

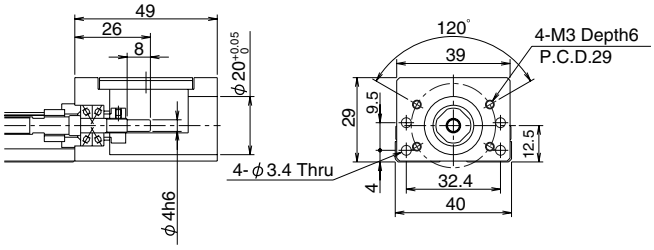

Motor Bracket A6 (Mass:10g)

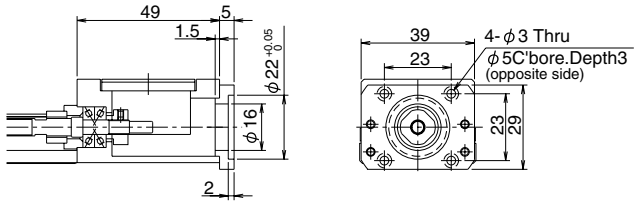

Motor Bracket A1 (Mass:38g)

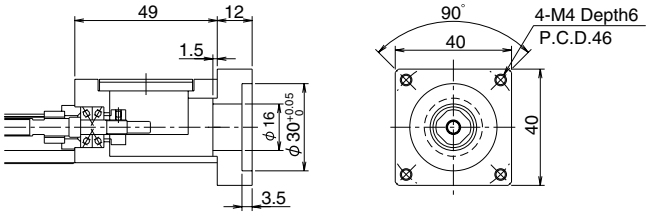

Motor Bracket A7 (Mass:8g)

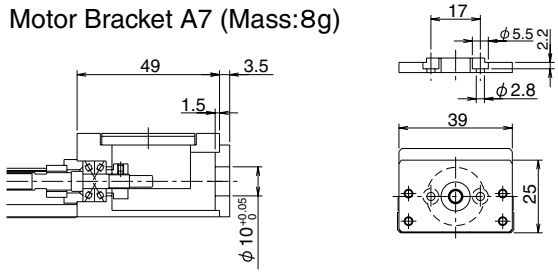

Motor Bracket A3 (Mass:39g)

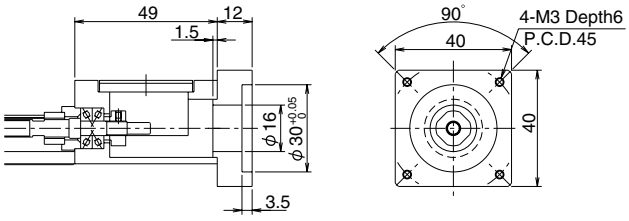

Motor Bracket A8 (Mass:12g)

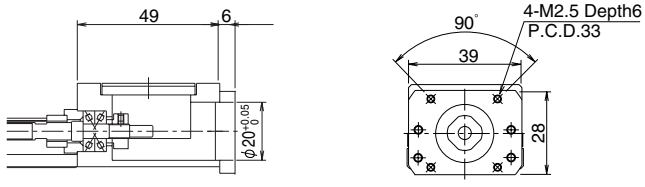

Motor Bracket A4 (Mass: 5g)

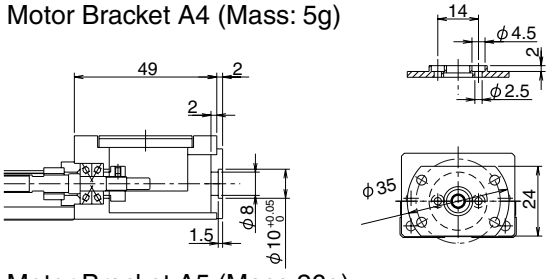

Motor Bracket A9 (Mass:14g)

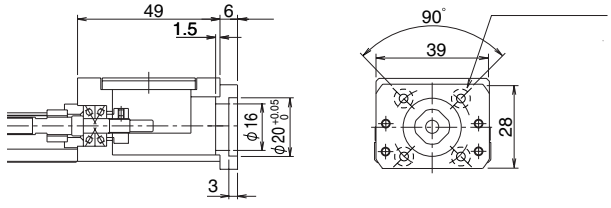

Motor Bracket A5 (Mass:26g)

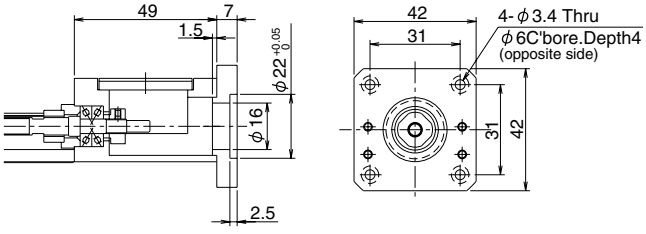

For configurations A4, A5, A6,A7and A9, attach intermediate flange to motor first.

www.bergab.ru Берг АБ bergab@ya.ru Тел. (495)-228-06-21, факс (495) 223-3071

www.bergab.ru Берг АБ bergab@ya.ru Тел. (495)-228-06-21, факс (495) 223-3071

BG26

Figures inside( ) indicates mass of the motor mount adapter plate.

Motor Bracket A0

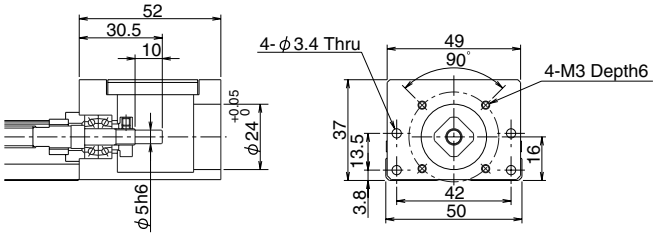

Motor Bracket A6 (Mass:16g)

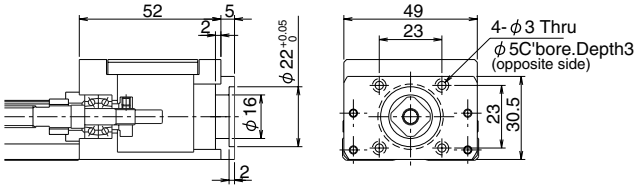

Motor Bracket A1 (Mass:28g)

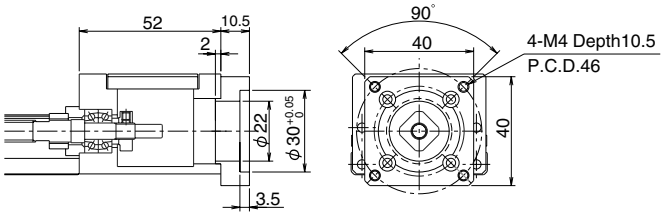

Motor Bracket A7 (Mass: 8g)

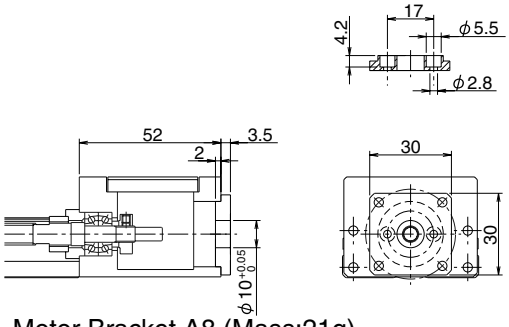

Motor Bracket A3 (Mass:24g)

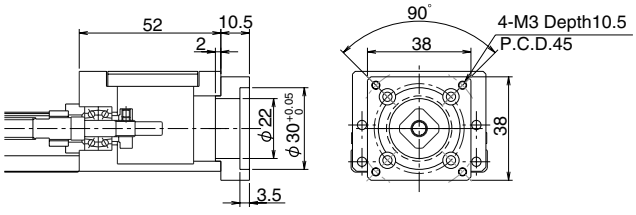

Motor Bracket A8 (Mass:21g)

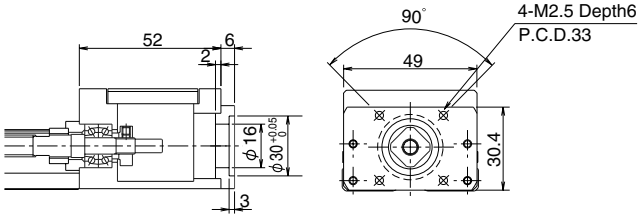

Motor Bracket A5 (Mass:32g)

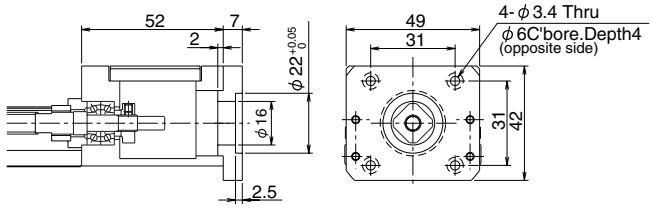

Motor Bracket A9 (Mass:21g)

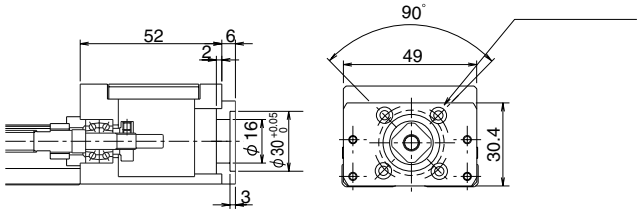

For configurations A4, A5, A6,A7and A9, attach intermediate flange to motor first.

www.bergab.ru Берг АБ bergab@ya.ru Тел. (495)-228-06-21, факс (495) 223-3071

www.bergab.ru Берг АБ bergab@ya.ru Тел. (495)-228-06-21, факс (495) 223-3071

BG33

Figures inside( ) indicates mass of the motor mount adapter plate.

Motor Bracket A0

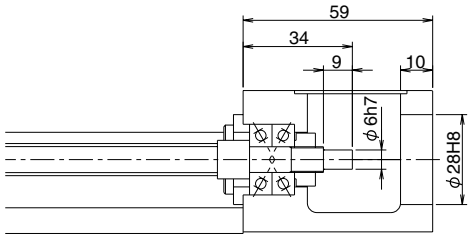

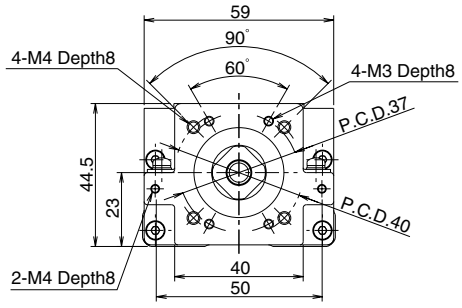

Motor Bracket A1 (Mass:66 g)

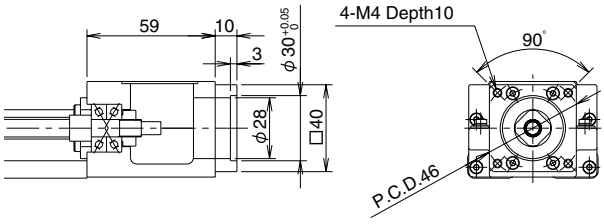

Motor Bracket A4 (Mass:212 g)

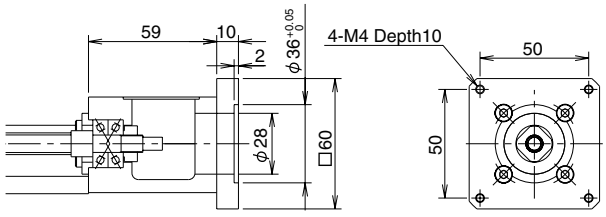

Motor Bracket A2 (Mass:67 g)

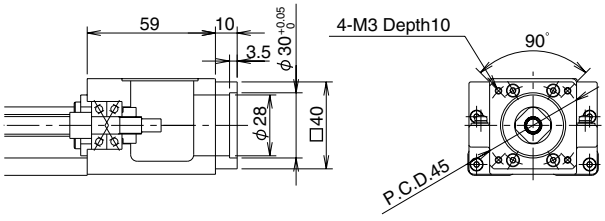

Motor Bracket A5 (Mass:125 g)

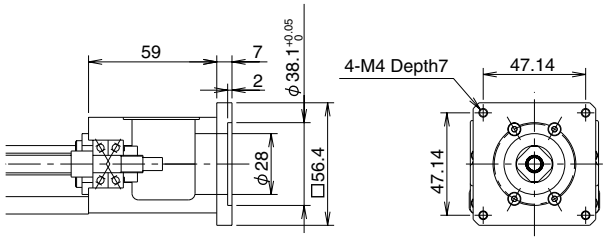

Motor Bracket A3 (Mass:133 g)

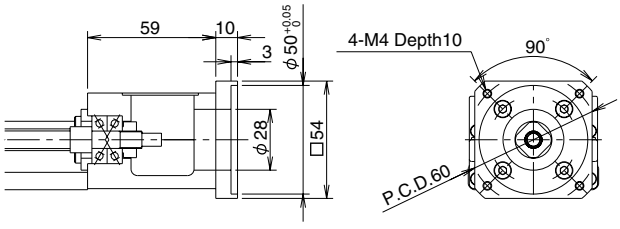

Motor Bracket B1 (Mass:111 g)

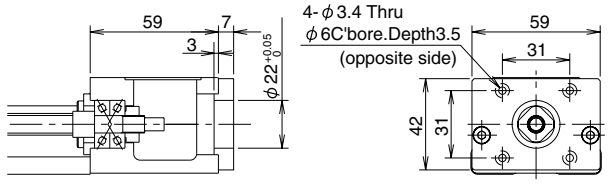

For configuration of B1,attach intermediate flange to motor first.

www.bergab.ru Берг АБ bergab@ya.ru Тел. (495)-228-06-21, факс (495) 223-3071

www.bergab.ru Берг АБ bergab@ya.ru Тел. (495)-228-06-21, факс (495) 223-3071

BG46

Figures inside( ) indicates mass of the motor mount adapter plate.

Motor Bracket A0

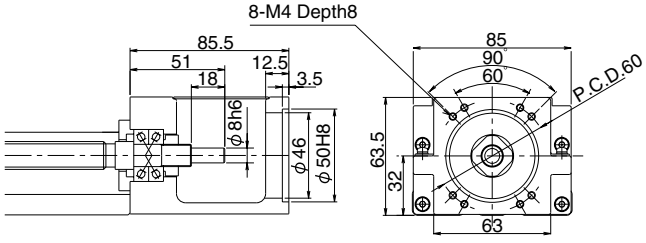

Motor Bracket A4(Mass:628 g)

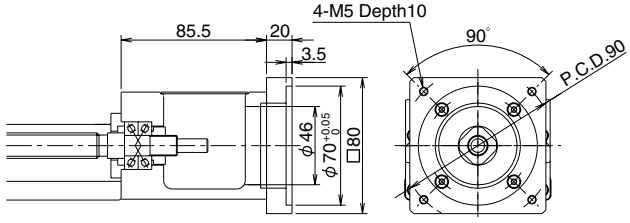

Motor Bracket A1 (Mass:103 g)

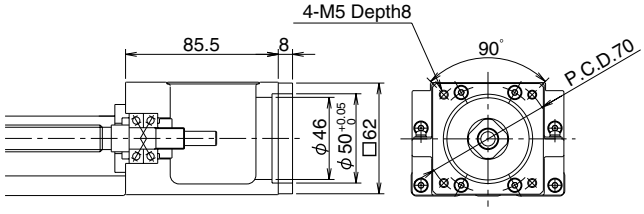

Motor Bracket B0

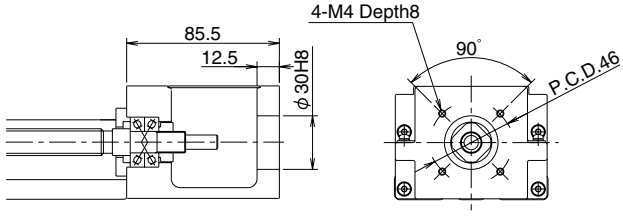

Motor Bracket A2 (Mass:106 g)

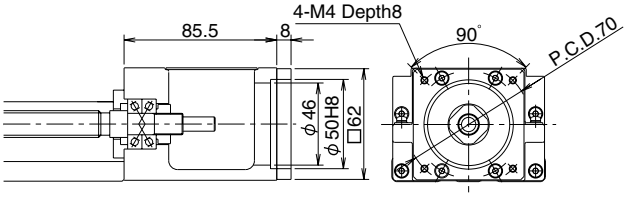

Motor Bracket C0

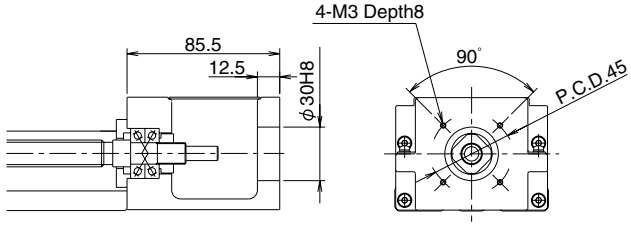

Motor Bracket A3 (Mass:448 g)

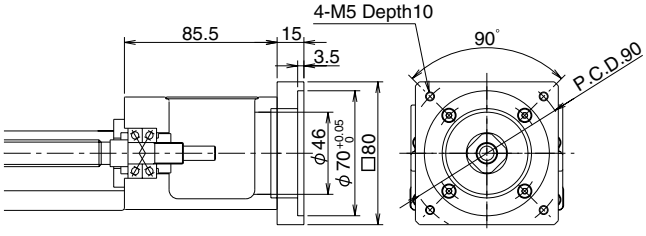

Motor Bracket D0

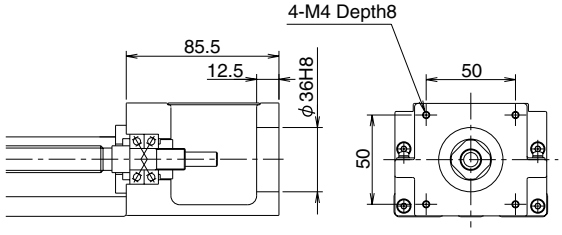

www.bergab.ru Берг АБ bergab@ya.ru Тел. (495)-228-06-21, факс (495) 223-3071

www.bergab.ru Берг АБ bergab@ya.ru Тел. (495)-228-06-21, факс (495) 223-3071

BG55

Figures inside( ) indicates mass of the motor mount adapter plate.

Motor Bracket A0

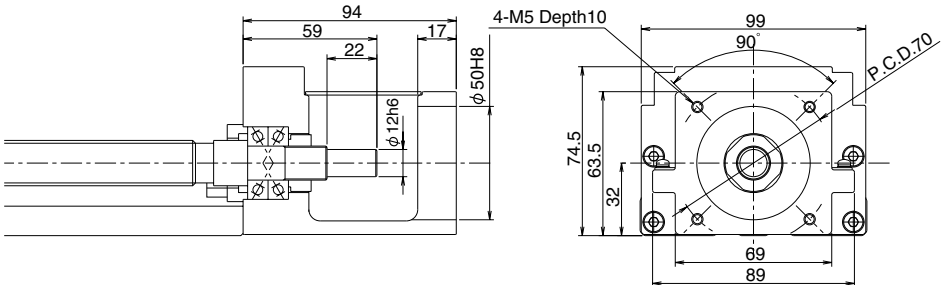

Motor Bracket A1 (Mass:329 g)

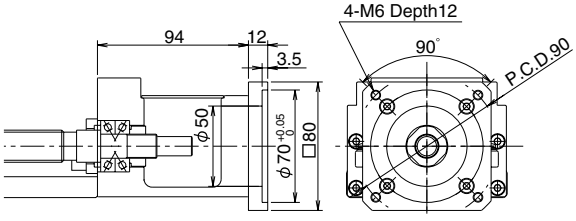

Motor Bracket A3 (Mass:399 g)

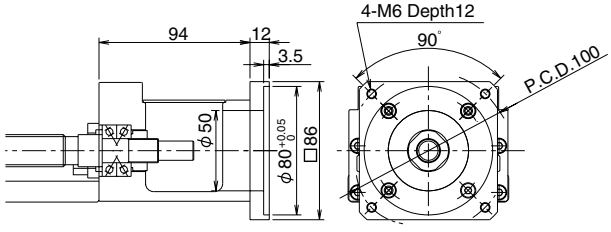

Motor Bracket A2 (Mass:333 g)

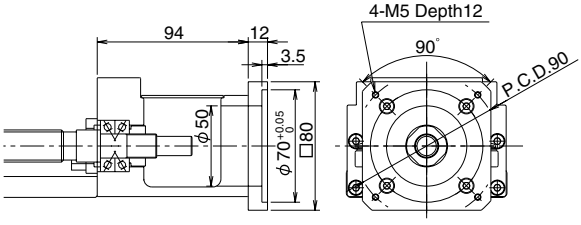

Motor Bracket A4 (Mass:449 g)

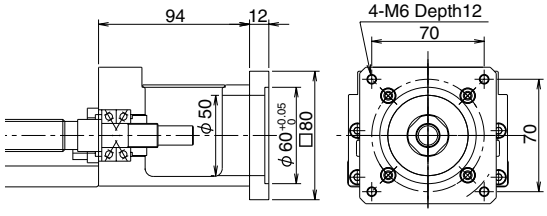

www.bergab.ru Берг АБ bergab@ya.ru Тел. (495)-228-06-21, факс (495) 223-3071

www.bergab.ru Берг АБ bergab@ya.ru Тел. (495)-228-06-21, факс (495) 223-3071

EXPOSED BRACKET

For the BG type, Exposed brackets with the motor end of the ball screw shaft exposed are available. When using a motor unable to be mounted using a standard motor bracket or intermediate flange, make an original bracket and connect it to the exposed bracket.

BG20 Exposed Bracket R0

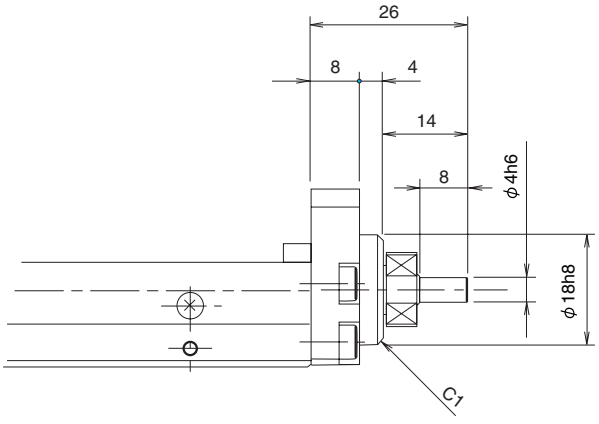

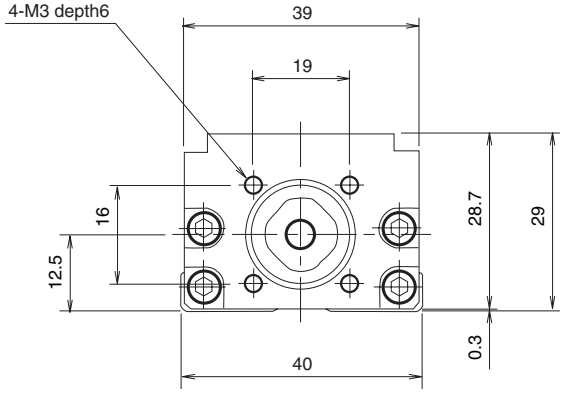

1. can be used for both with cover and sensor.
2. Mass is reduced 0.04kg from the value of Table I-3, page I-7.

BG26 Exposed Bracket R0

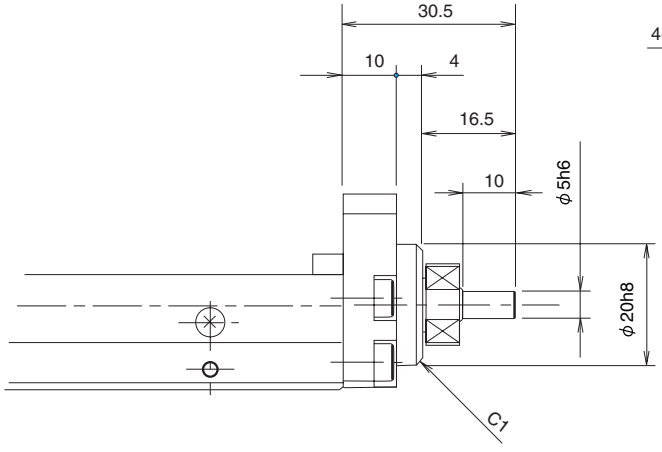

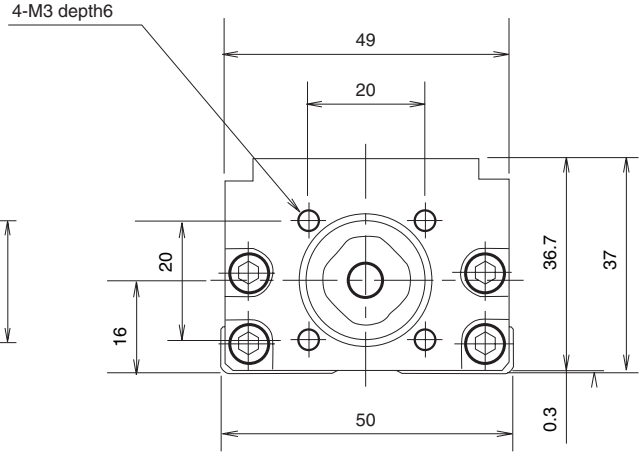

1. can be used for both with cover and sensor.
2. Mass is reduced 0.08kg from the value of Table I-3, page I-7.

www.bergab.ru Берг АБ bergab@ya.ru Тел. (495)-228-06-21, факс (495) 223-3071

www.bergab.ru Берг АБ bergab@ya.ru Тел. (495)-228-06-21, факс (495) 223-3071

〈BG33 Exposed Bracket R0〉

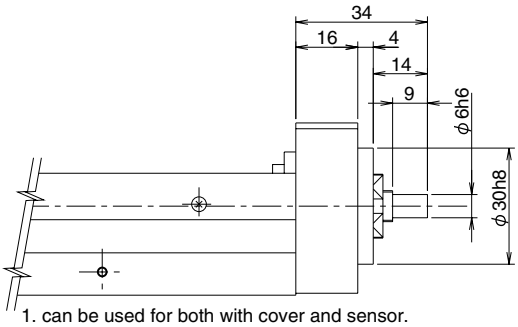

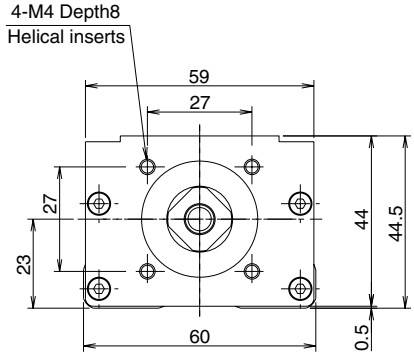

1. can be used for both with cover and sensor.
2. Mass is reduced 0.1kg from the value of Table I-3, page I-7.

〈BG46 Exposed Bracket R0〉

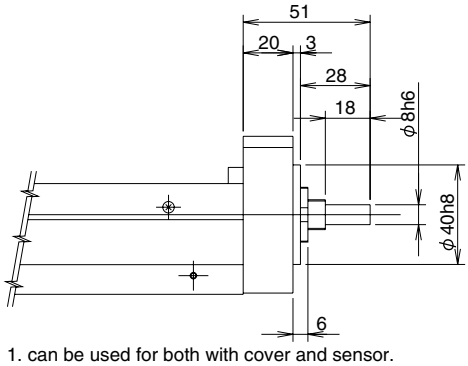

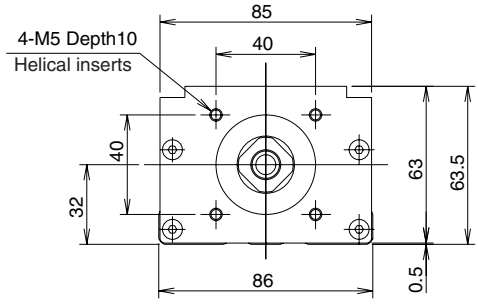

1. can be used for both with cover and sensor.
2. Mass is reduced 0.3kg from the value of Table I-3, page I-7.

www.bergab.ru Берг АБ bergab@ya.ru Тел. (495)-228-06-21, факс (495) 223-3071

www.bergab.ru Берг АБ bergab@ya.ru Тел. (495)-228-06-21, факс (495) 223-3071

〈BG55 Exposed Bracket R0〉

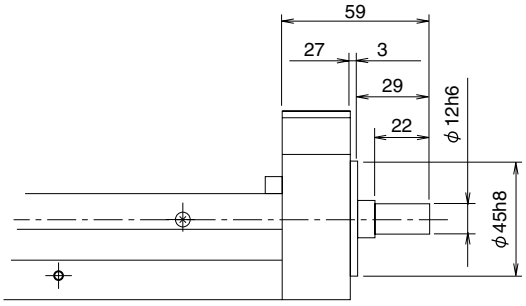

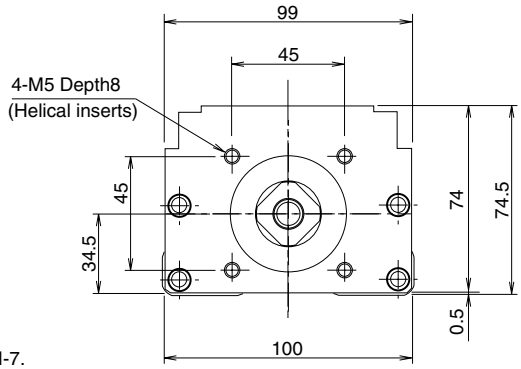

1. can be used for both with cover and sensor.
2. Mass is reduced 0.3kg from the value of Table I-3, page I-7.

www.bergab.ru Берг АБ bergab@ya.ru Тел. (495)-228-06-21, факс (495) 223-3071

www.bergab.ru Берг АБ bergab@ya.ru Тел. (495)-228-06-21, факс (495) 223-3071

RETURN PULLEY UNIT

Return pulley units in which a motor is connected with a timing belt are available for BG type. Its return structure allows the reduction of total length (available for BG33 and BG46 types).

〈BG33 Return Pulley Unit〉

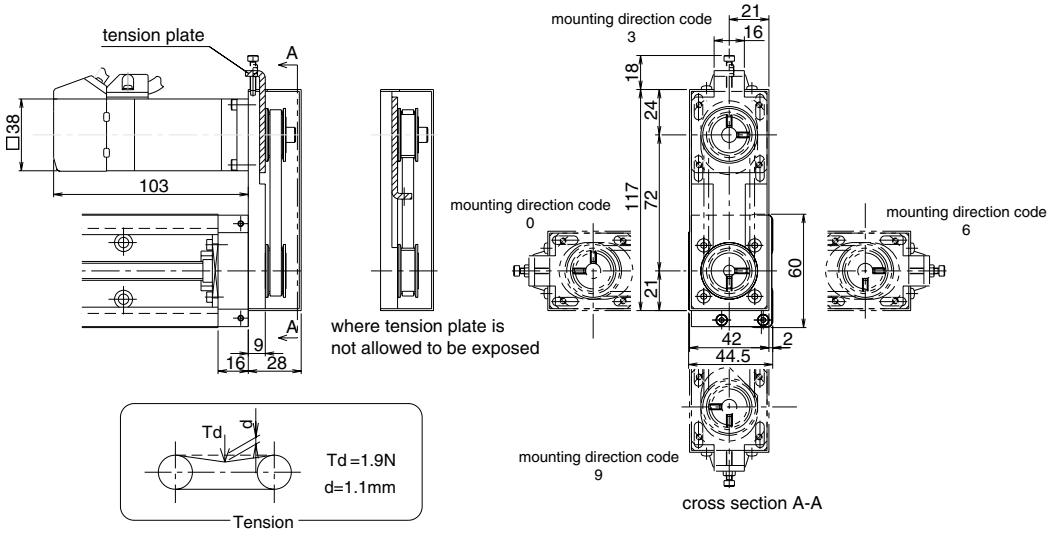

1.This drawing shows RA for MSMA01(Panasonic).
2.Installation position of Pulley Unit can be selected at 90° intervals (mounting direction code).
3.Can be used for both with or without cover and / or sensor.
4.Tension plate can be built in and is not exposed.
5.Mass is added 0.2kg to the value of Table I-3, page I-7.
6.Inertia is added 2.22×10^{-6}kg•m^2 to the value of Table I-5, page I-8.
7.part number format

BG33＊＊＊—＊＊＊＊/☆☆□

Symbol of applicable motor bracket (see table I-14)

Mounting direction code (refer to cross section A-A)

Table I-14 Motor Bracket Configurations

Motor Bracket	Applicable Motors	
RA	MATSUSHITA ELECTRIC INDUSTRIAL MINAS SERIES	:50~100W
RB	YASUKAWA ELECTRIC SIGMA SERIES	:50~100W
	MITSUBISHI ELECTRIC HC-MF SERIES	:50~100W
	SANYO ELECTRIC P3 SERIES	:50~100W

Please contact NB for return brackets for other stepper motors.

www.bergab.ru Берг АБ bergab@ya.ru Тел. (495)-228-06-21, факс (495) 223-3071

www.bergab.ru Берг АБ bergab@ya.ru Тел. (495)-228-06-21, факс (495) 223-3071

〈BG46 Return Pulley Unit〉

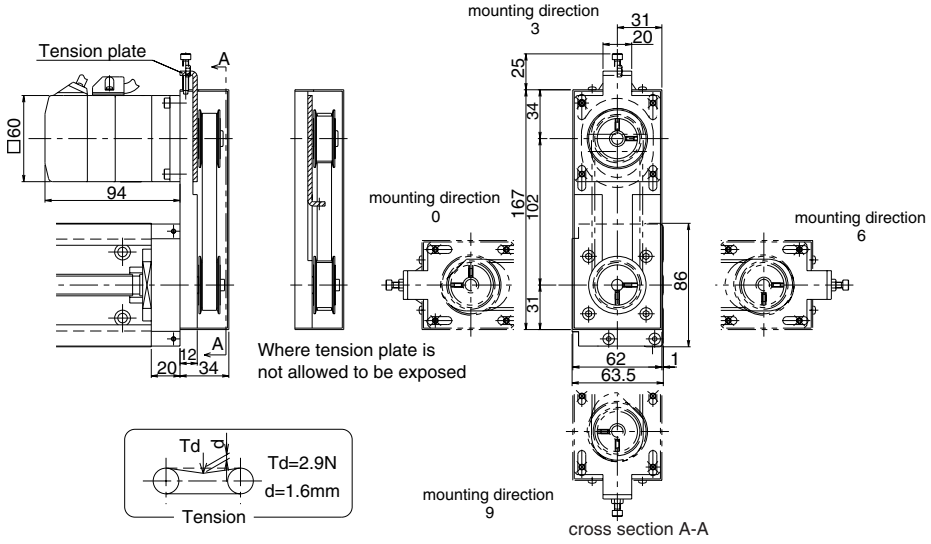

1.This drawing shows RA for MSMA01(Panasonic).
2.Installation position of Pulley Unit can be selected at 90° intervals (mounting direction code).
3.Can be used for both with or without cover and / or sensor.
4.Tension plate can be built in and is not exposed.
5.Mass is added 0.7kg to the value of Table I-3, page I-7.
6.Inertia is added 1.24×10^{-5}kg•m^2 to the value of Table I-5, page I-8.
7.parts number format

BG33＊＊＊—＊＊＊＊/ ☆☆ □

Symbol of applicable motor bracket (see table I-15)

Mounting direction code (refer to cross section A-A)

Table I-15 Motor Bracket Configurations

Motor Bracket	Applicable Motors	
RA	MATSUSHITA ELECTRIC INDUSTRIAL MINAS SERIES	: 200W
RB	YASUKAWA ELECTRIC SIGMA SERIES	: 200W
	MITSUBISHI ELECTRIC HC-MF SERIES	: 200W
	SANYO ELECTRIC P3 SERIES	: 200W
RC	ORIENTAL MOTOR STEPPER MOTOR □60 SERIES	

Please contact NB for return brackets for other stepper motors.

www.bergab.ru Берг АБ bergab@ya.ru Тел. (495)-228-06-21, факс (495) 223-3071

www.bergab.ru Берг АБ bergab@ya.ru Тел. (495)-228-06-21, факс (495) 223-3071

SENSOR

Photo-sensor or proximity-sensor may be attached to the BG actuator with our optional sensor-mounting rail. Tapped holes are machined on both side of guide rail, allowing attachment of sensor to either side. Standard positioning (without special instruction from customer) would be to the left of the motor mount end. Sensor option includes the items that are listed below.

BG20

S Specification (Compact Photo Micro Sensor)

—Without Cover—

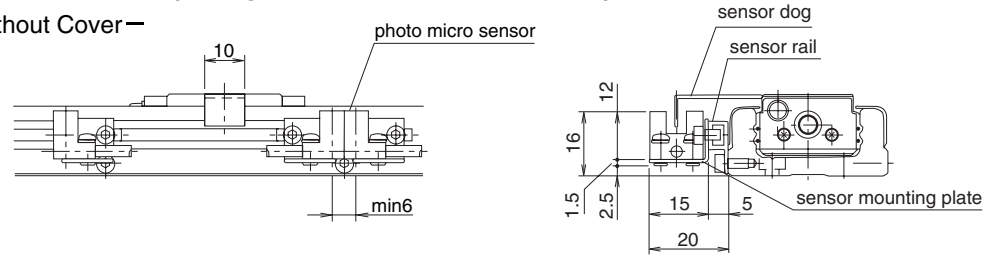

—With Cover—

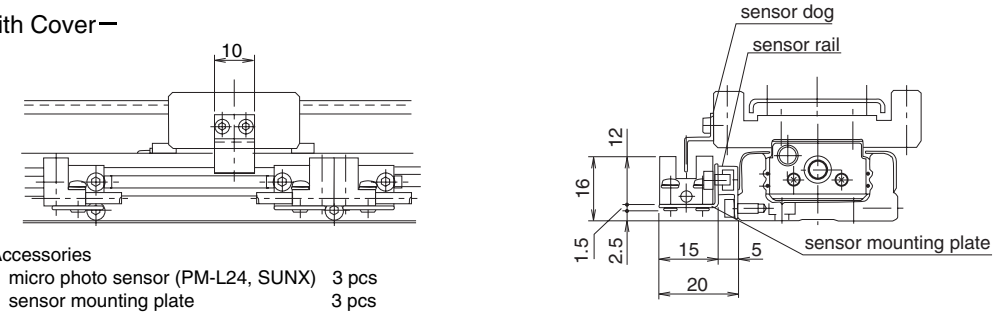

Accessories

micro photo sensor (PM-L24, SUNX)	3 pcs
sensor mounting plate	3 pcs
sensor rail	1 pc
sensor dog	1 pc

K Specification (Proximity Sensor)

—Without Cover—

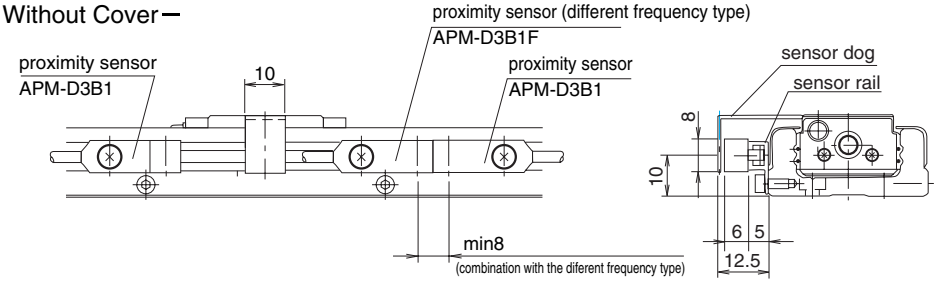

—With Cover—

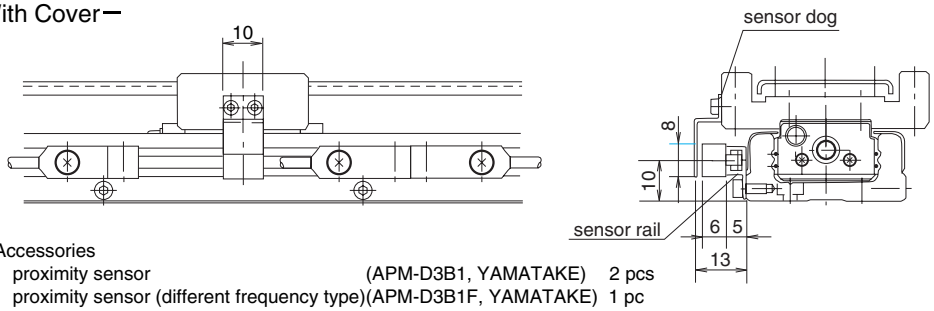

Accessories

proximity sensor	(APM-D3B1, YAMATAKE)	2 pcs
proximity sensor (different frequency type)	(APM-D3B1F, YAMATAKE)	1 pc
sensor rail		1 pc
sensor dog		1 pc

www.bergab.ru Берг АБ bergab@ya.ru Тел. (495)-228-06-21, факс (495) 223-3071

www.bergab.ru Берг АБ bergab@ya.ru Тел. (495)-228-06-21, факс (495) 223-3071

BG26

S Specification (Compact Photo Micro Sensor)

—Without Cover—

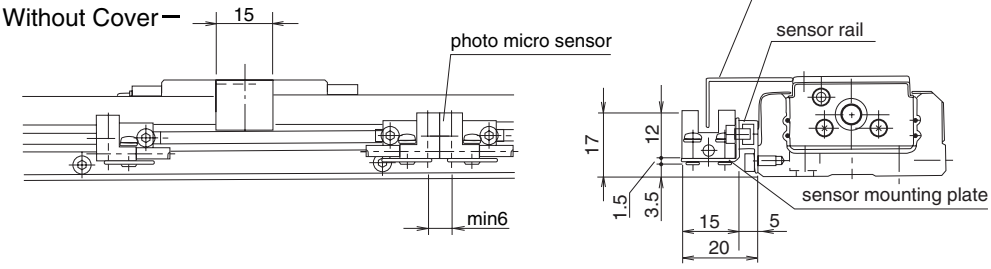

—With Cover—

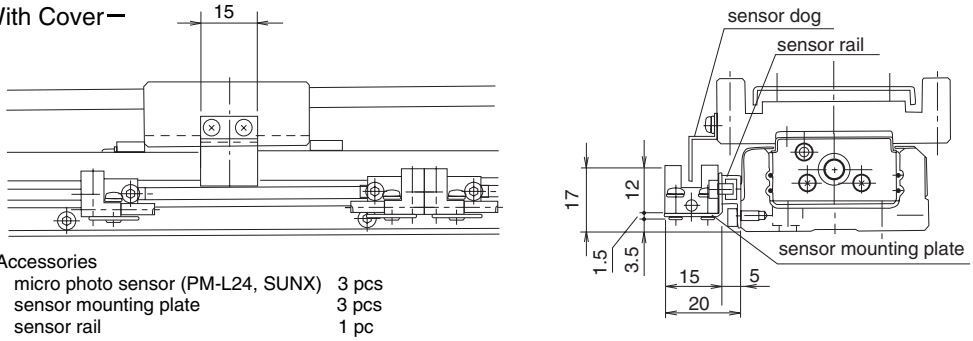

Accessories

micro photo sensor (PM-L24, SUNX)	3 pcs
sensor mounting plate	3 pcs
sensor rail	1 pc
sensor dog	1 pc

K Specification (Proximity Sensor)

—Without Cover—

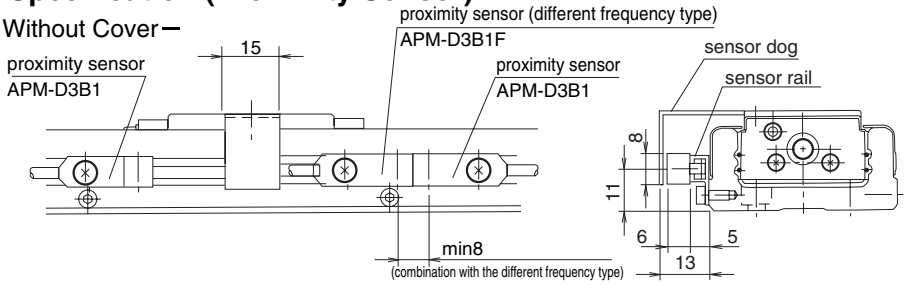

—With Cover—

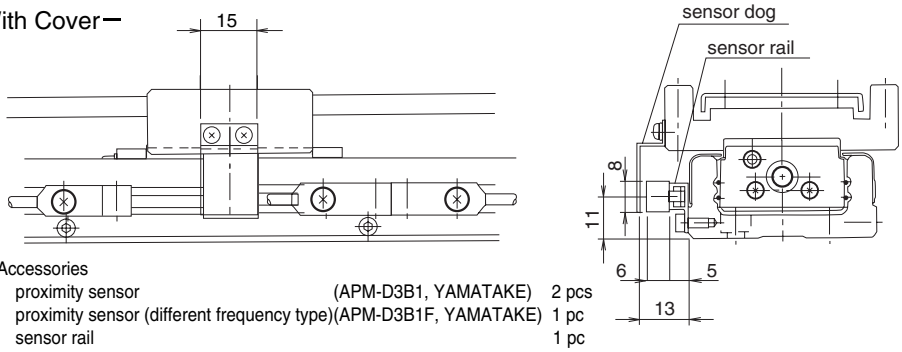

Accessories

proximity sensor	(APM-D3B1, YAMATAKE)	2 pcs
proximity sensor (different frequency type)	(APM-D3B1F, YAMATAKE)	1 pc
sensor rail		1 pc
sensor dog		1 pc

www.bergab.ru Берг АБ bergab@ya.ru Тел. (495)-228-06-21, факс (495) 223-3071

www.bergab.ru Берг АБ bergab@ya.ru Тел. (495)-228-06-21, факс (495) 223-3071

BG33

S Specification (Slim-Type Photo Micro Sensor)

—Without Cover—

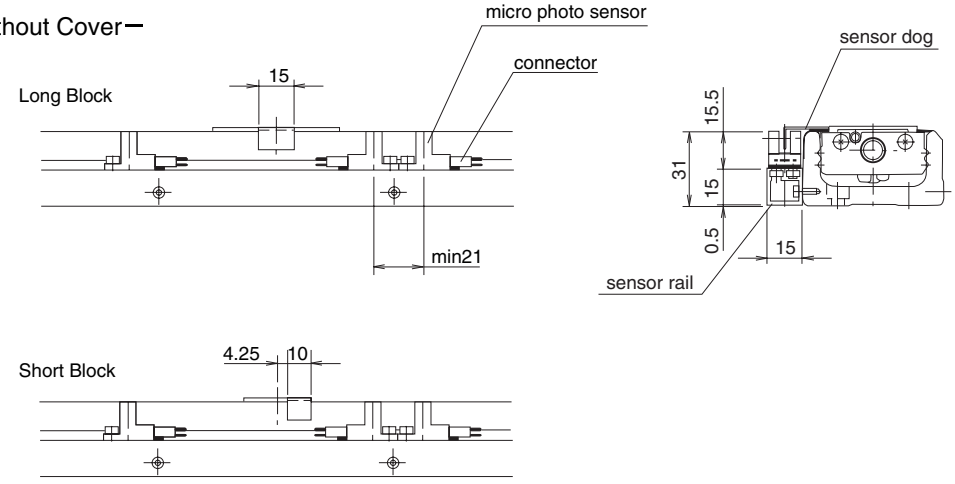

—With Cover—

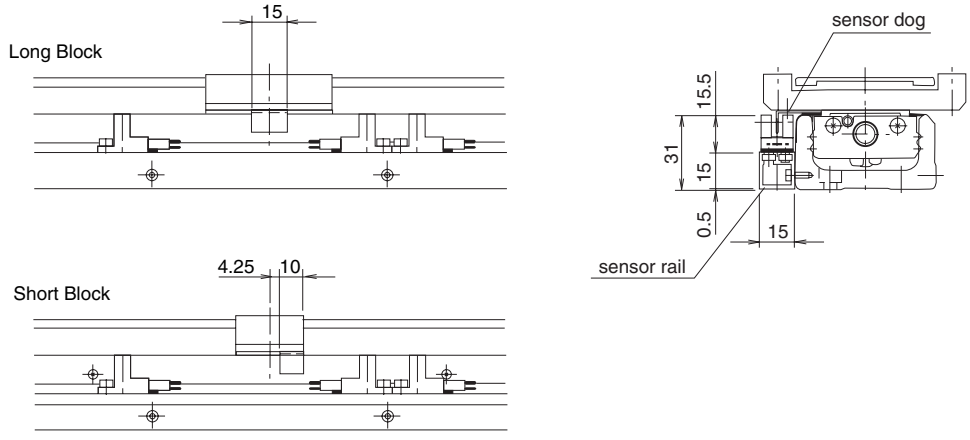

Accessories

photo micro sensor (EE-SX674, OMRON)	3 pcs
connector (EE-1001, OMRON)	3 pcs
sensor rail	1 pc
sensor dog	*1 pc

* 2 pcs for BG33D-150.

www.bergab.ru Берг АБ bergab@ya.ru Тел. (495)-228-06-21, факс (495) 223-3071

www.bergab.ru Берг АБ bergab@ya.ru Тел. (495)-228-06-21, факс (495) 223-3071

BG33

H Specification (Close Contact Capable Photo Micro Sensor)

—Without Cover—

Long Block

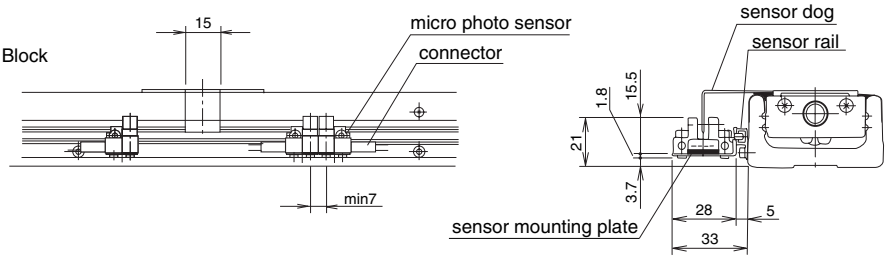

Short Block

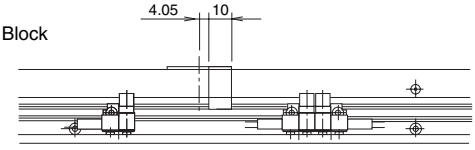

—With Cover—

Long Block

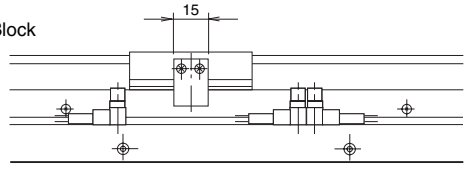

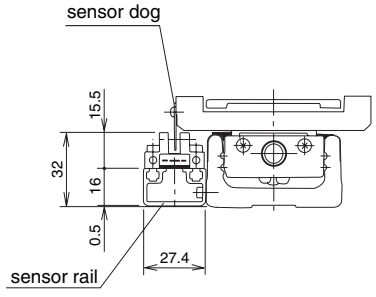

Short Block

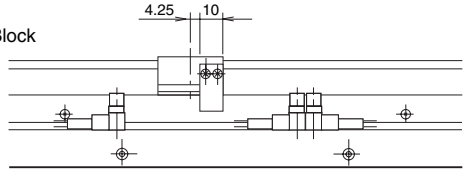

Accessories

photo micro sensor (EE-SX671, OMRON)	3 pcs
connector (EE-1001, OMRON)	3 pcs
sensor mounting plate (only for the without cover type)	3 pcs
sensor rail	1 pc
sensor dog	*1 pcs

* 2 pcs for BG33D-150.

www.bergab.ru Берг АБ bergab@ya.ru Тел. (495)-228-06-21, факс (495) 223-3071

www.bergab.ru Берг АБ bergab@ya.ru Тел. (495)-228-06-21, факс (495) 223-3071

BG33

K Specification (Proximity Sensor)

—Without Cover—

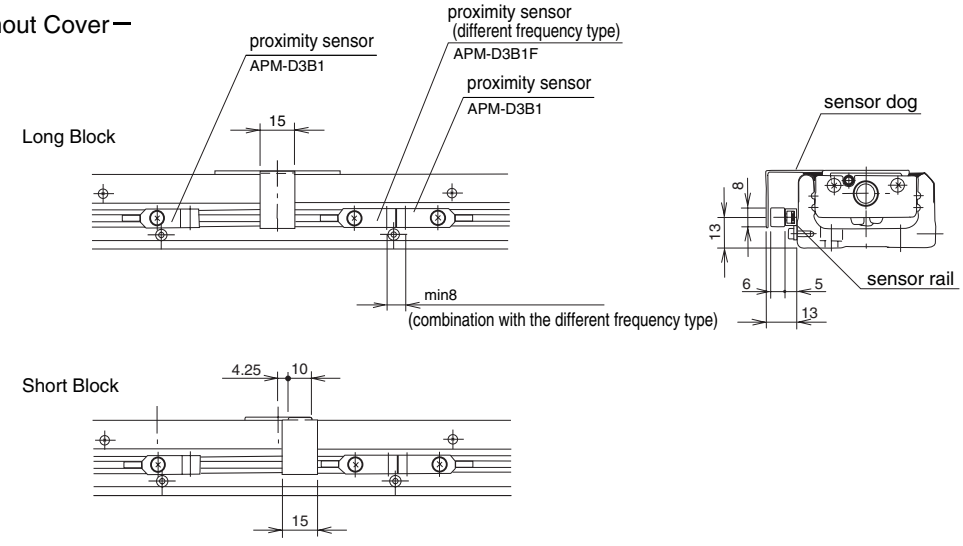

—With Cover—

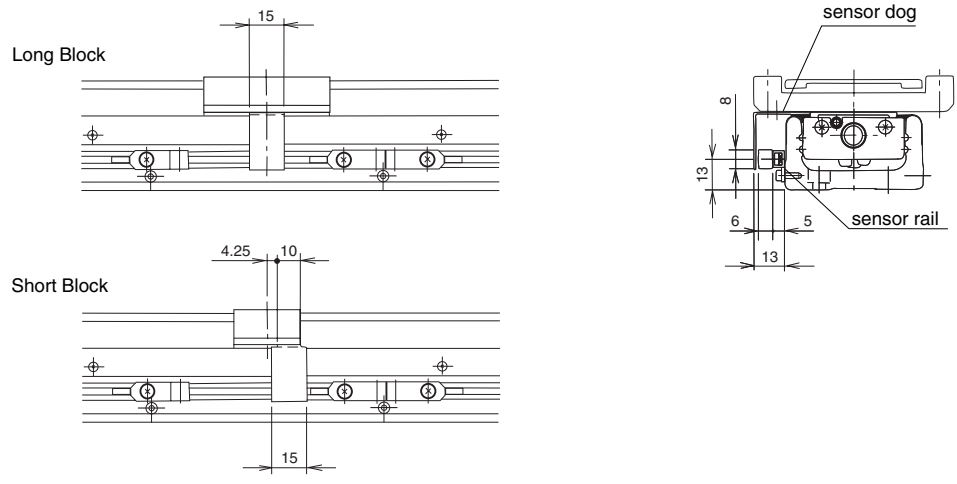

Accessories

proximity sensor	(APM-D3B1, YAMATAKE)	2 pcs
proximity sensor (different frequency type)	(APM-D3B1F, YAMATAKE)	1 pc
sensor rail		1 pc
sensor dog		*1 pc

* 2 pcs for BG33D-150.

www.bergab.ru Берг АБ bergab@ya.ru Тел. (495)-228-06-21, факс (495) 223-3071

www.bergab.ru Берг АБ bergab@ya.ru Тел. (495)-228-06-21, факс (495) 223-3071

BG46

S Specification (Slim-Type Photo Micro Sensor)

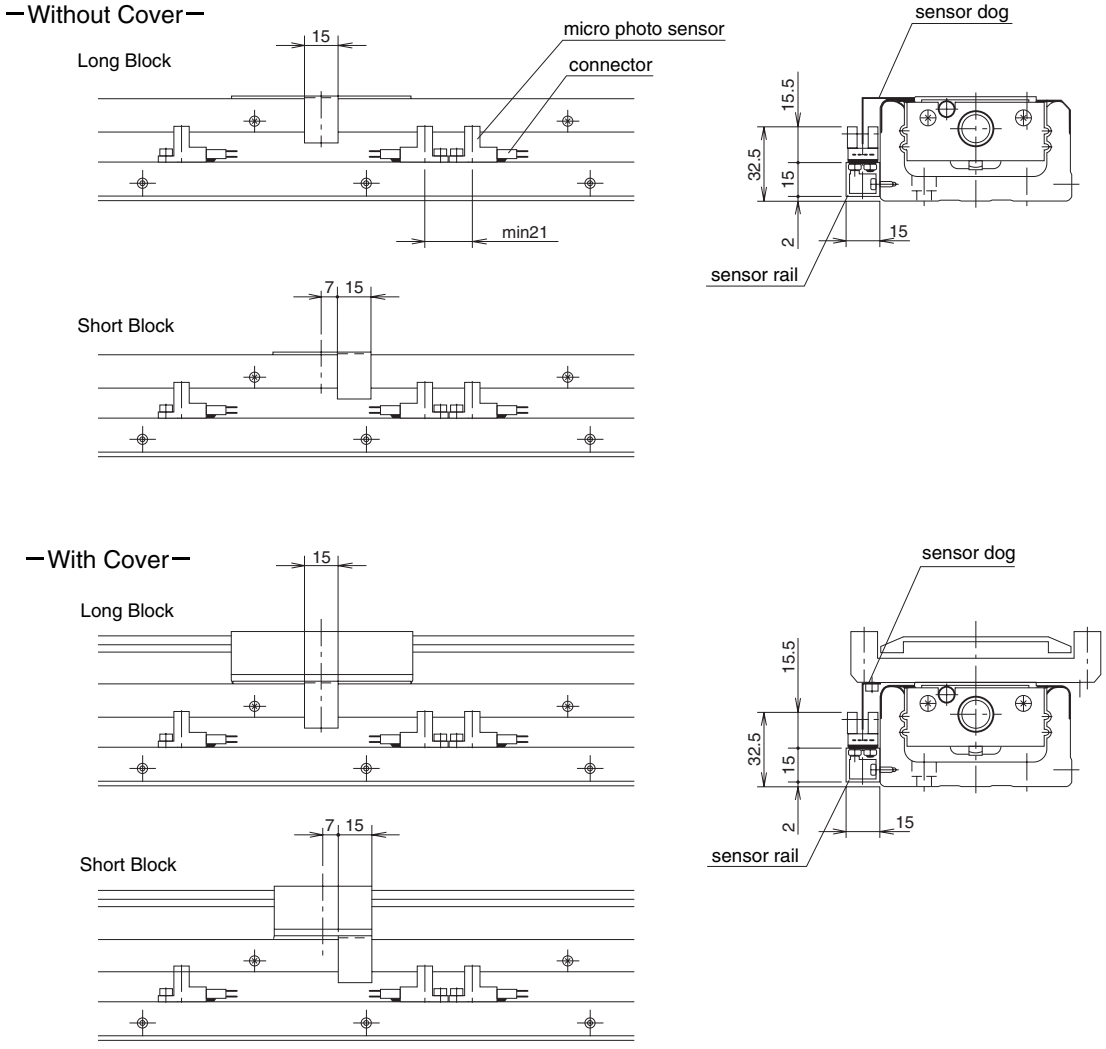

Accessories

photo micro sensor (EE-SX674, OMRON)	3 pcs
connector (EE-1001, OMRON)	3 pcs
sensor rail	1 pc
sensor dog	1 pc

www.bergab.ru Берг АБ bergab@ya.ru Тел. (495)-228-06-21, факс (495) 223-3071

www.bergab.ru Берг АБ bergab@ya.ru Тел. (495)-228-06-21, факс (495) 223-3071

BG46

H Specification (Close Contact Capable Photo Micro Sensor)

—Without Cover—

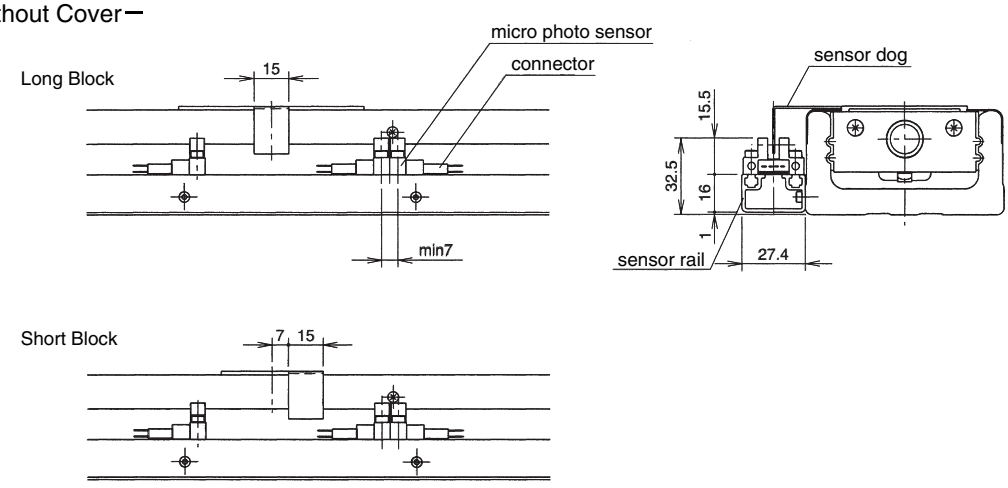

—With Cover—

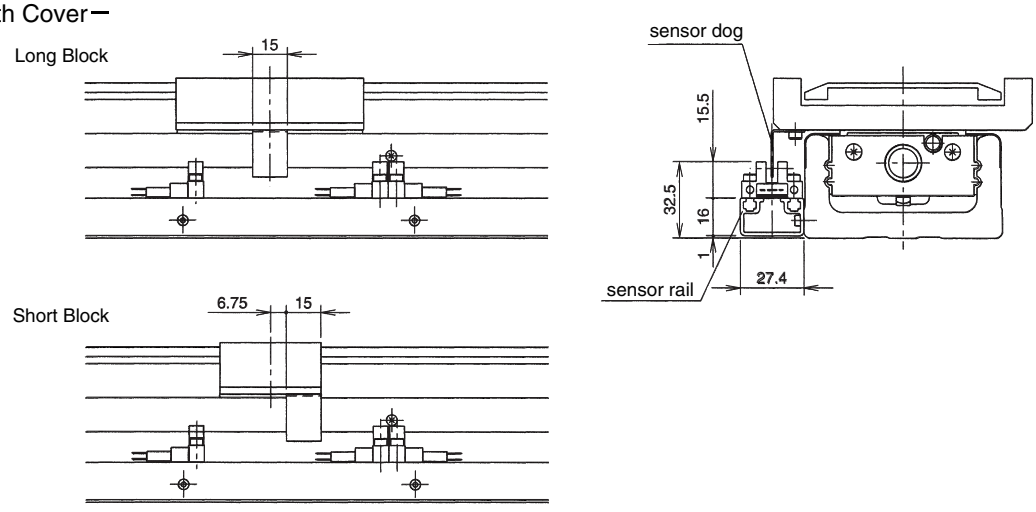

Accessories

photo micro sensor (EE-SX671, OMRON)	3 pcs
connector (EE-1001, OMRON)	3 pcs
sensor rail	1 pc
sensor dog	1 pcs

www.bergab.ru Берг АБ bergab@ya.ru Тел. (495)-228-06-21, факс (495) 223-3071

www.bergab.ru Берг АБ bergab@ya.ru Тел. (495)-228-06-21, факс (495) 223-3071

BG46

K Specification (Proximity Sensor)

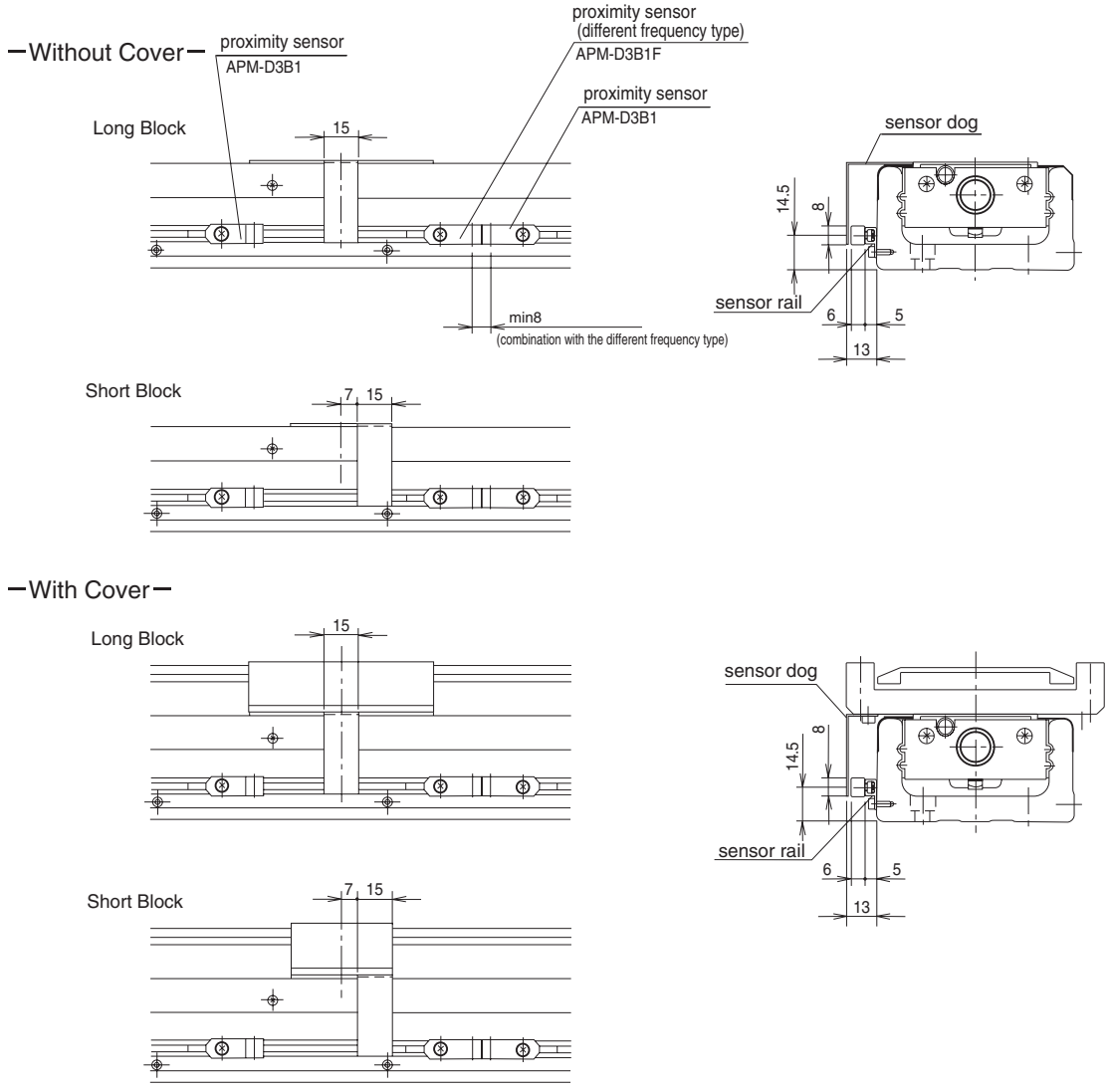

Accessories

proximity sensor	(APM-D3B1, YAMATAKE)	2 pcs
proximity sensor (different frequency type)	(APM-D3B1F, YAMATAKE)	1 pc
sensor rail		1 pc
sensor dog		1 pc

www.bergab.ru Берг АБ bergab@ya.ru Тел. (495)-228-06-21, факс (495) 223-3071

www.bergab.ru Берг АБ bergab@ya.ru Тел. (495)-228-06-21, факс (495) 223-3071

BG55

S Specification (Compact Photo Micro Sensor)

—Without Cover—

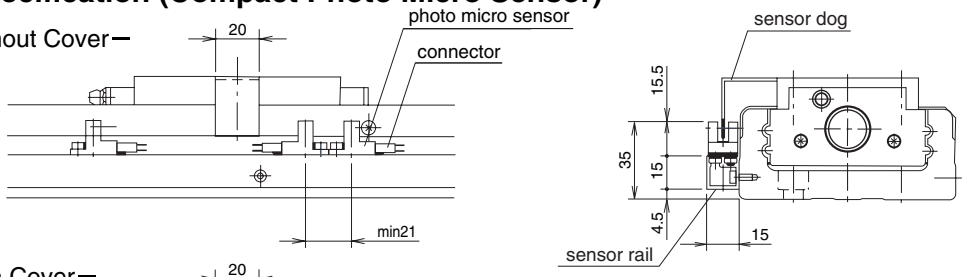

—With Cover—

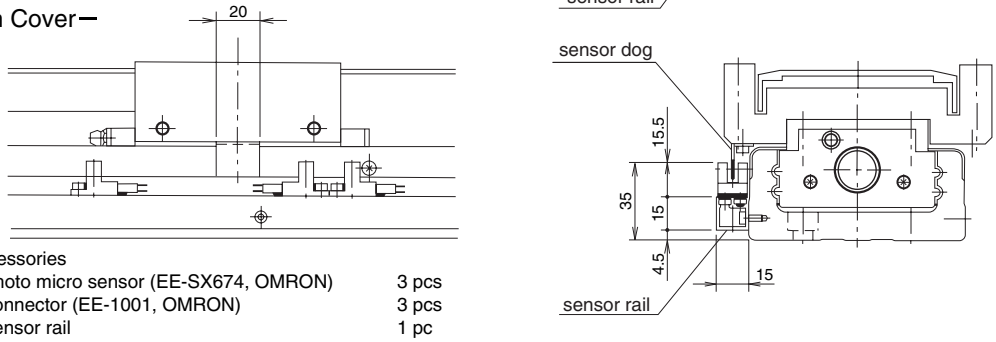

Accessories

photo micro sensor (EE-SX674, OMRON)	3 pcs
connector (EE-1001, OMRON)	3 pcs
sensor rail	1 pc
sensor dog	1 pc

H Specification (Close Contact Capable Photo Micro Sensor)

—Without Cover—

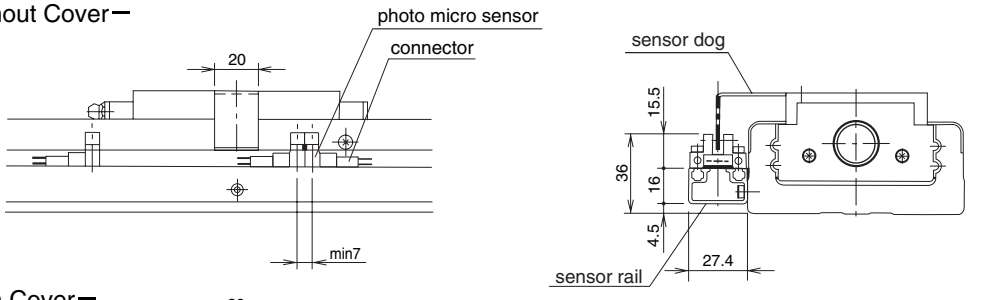

—With Cover—

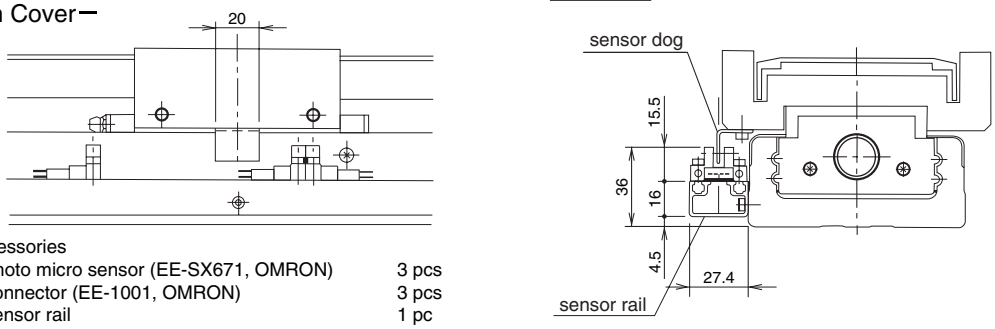

Accessories

photo micro sensor (EE-SX671, OMRON)	3 pcs
connector (EE-1001, OMRON)	3 pcs
sensor rail	1 pc
sensor dog	1 pc

www.bergab.ru Берг АБ bergab@ya.ru Тел. (495)-228-06-21, факс (495) 223-3071

www.bergab.ru Берг АБ bergab@ya.ru Тел. (495)-228-06-21, факс (495) 223-3071

BG55

K Specification (Proximity Sensor)

−Without Cover−

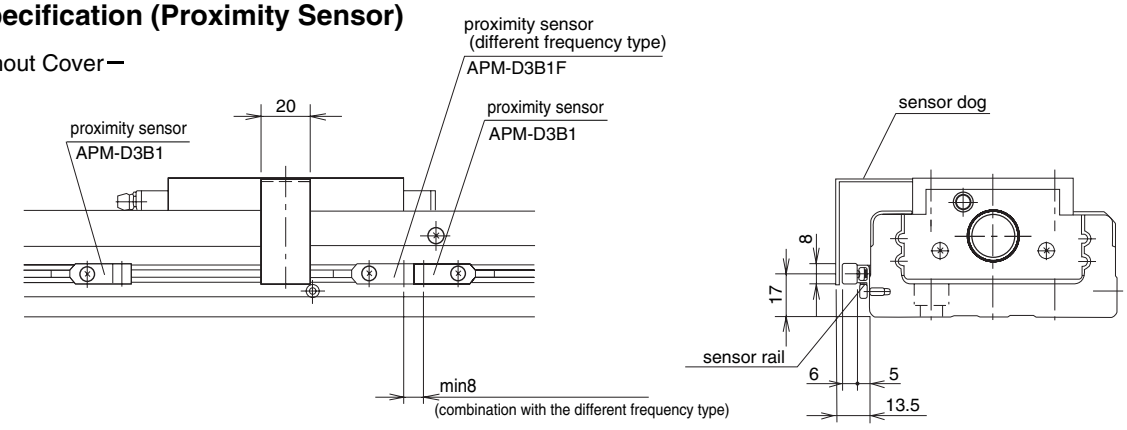

−With Cover−

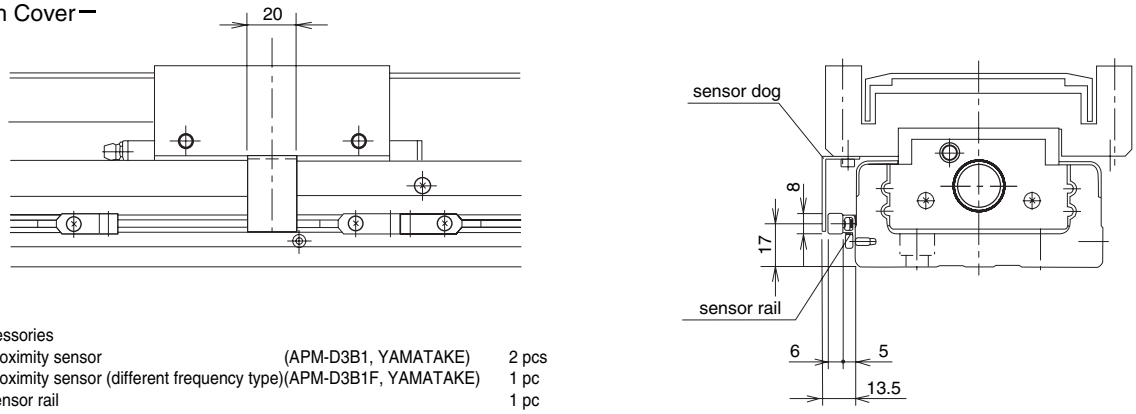

Accessories

proximity sensor	(APM-D3B1, YAMATAKE)	2 pcs
proximity sensor (different frequency type)	(APM-D3B1F, YAMATAKE)	1 pc
sensor rail		1 pc
sensor dog		1 pc

<PNP Sensor>

The BG type sensors can be changed to the PNP type by adding a sensor option code "PNP" at the end of the part number (excluding the BG20 and BG26 compact photo micro sensors).
Refer to Table I-16 for the model number of PNP type sensors.

Table I-16 Sensor Model Type

sensor code	sensor type	applicable model type	standard specification model type	PNP specification model type
S	slim-type photo micro sensor	BG33,BG46,BG55	EE-SX674	EE-SX674P
	compact photo micro sensor	BG20,BG26	PM-L24	not available
H	close contact capable photo micro sensor	BG33,BG46,BG55	EE-SX671	EE-SX671P
K	proximity sensor	all model types	APM-D3B1	APM-D3E1
	proximity sensor (different frequency type)	all model types	APM-D3B1F	APM-D3E1F

www.bergab.ru Берг АБ bergab@ya.ru Тел. (495)-228-06-21, факс (495) 223-3071

www.bergab.ru Берг АБ bergab@ya.ru Тел. (495)-228-06-21, факс (495) 223-3071

POSITIONING PIN HOLE

For the BG type, positioning pin holes can be provided on the slide block or the sub-table by adding the option code "PS" or "PW" at the end of the part number. When two blocks are used in the BG, the both blocks will be processed.
It is useful when exacting reassembly positioning is required.
When the code "PS" is added, the drilling is processed only on the mounting surface. On the other hand, when the code "PW" is specified for a BG with a cover, straight pins will be used at the connecting area of the slide block and the sub table (although the position is the same as the for "PS").
Note that only hole drilling is processed to the mounting surface and that no straight pin will be attached.

BG20A,B

For the two-block type, the both blocks will be processed.

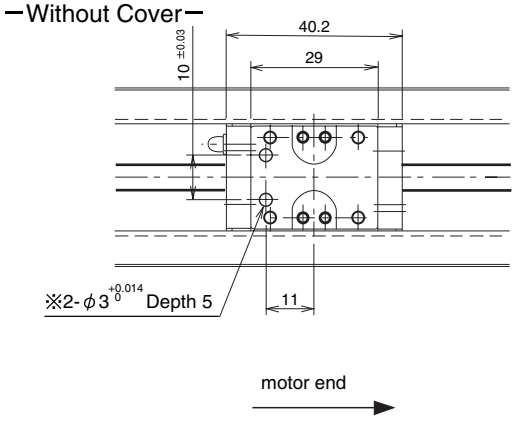

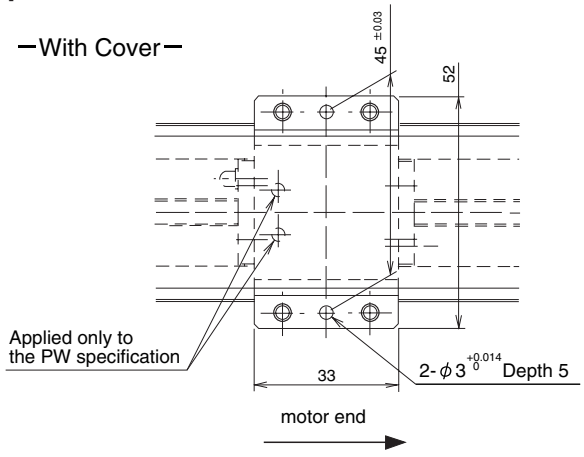

※For some cases, a shallow counter-bore of φ4 will be machined at the entrance of the area with "※" to remove a hardened layer.

BG26A,B

For the two-block type, the both blocks will be processed.

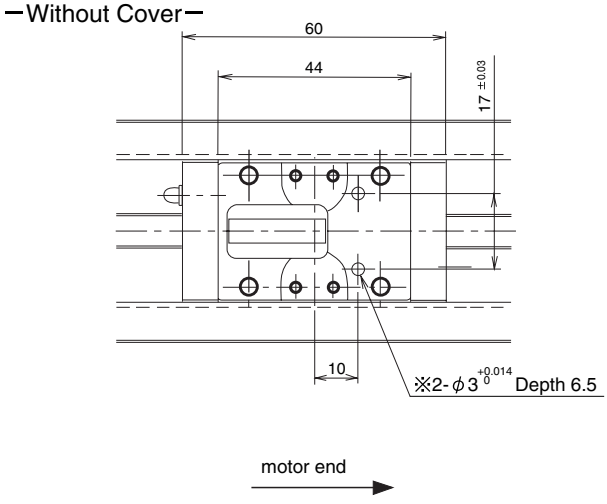

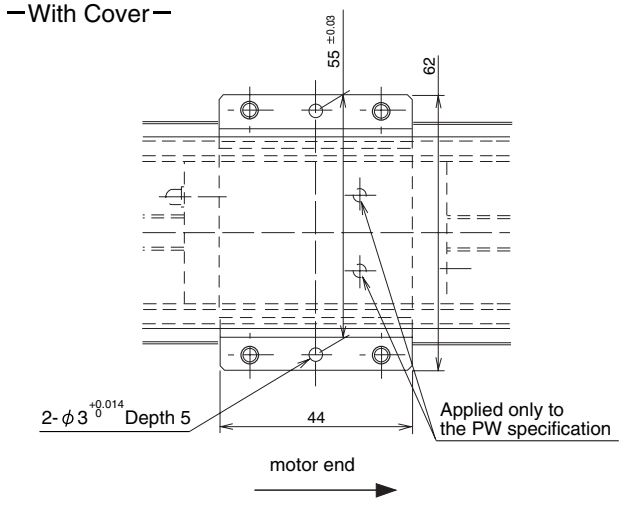

※For some cases, a shallow counter-bore of φ4 will be machined at the entrance of the area with "※" to remove a hardened layer.

www.bergab.ru Берг АБ bergab@ya.ru Тел. (495)-228-06-21, факс (495) 223-3071

www.bergab.ru Берг АБ bergab@ya.ru Тел. (495)-228-06-21, факс (495) 223-3071

BG33A,B

For the two-block type, the both blocks will be processed.

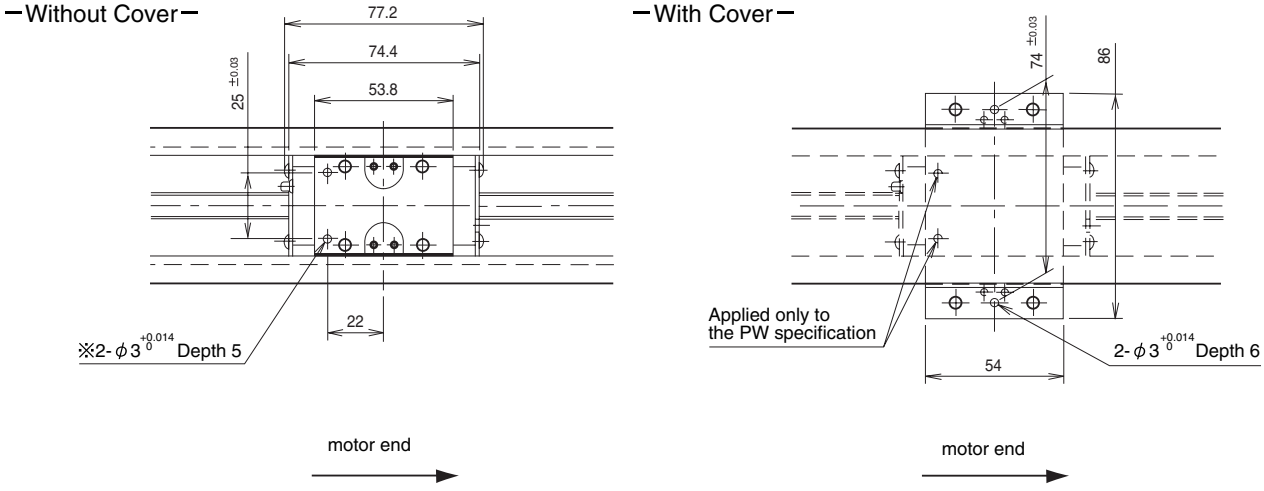

※For some cases, a shallow counter-bore of φ4 will be machined at the entrance of the area with "※" to remove a hardened layer.

BG33C,D

For the two-block type, the both blocks will be processed.

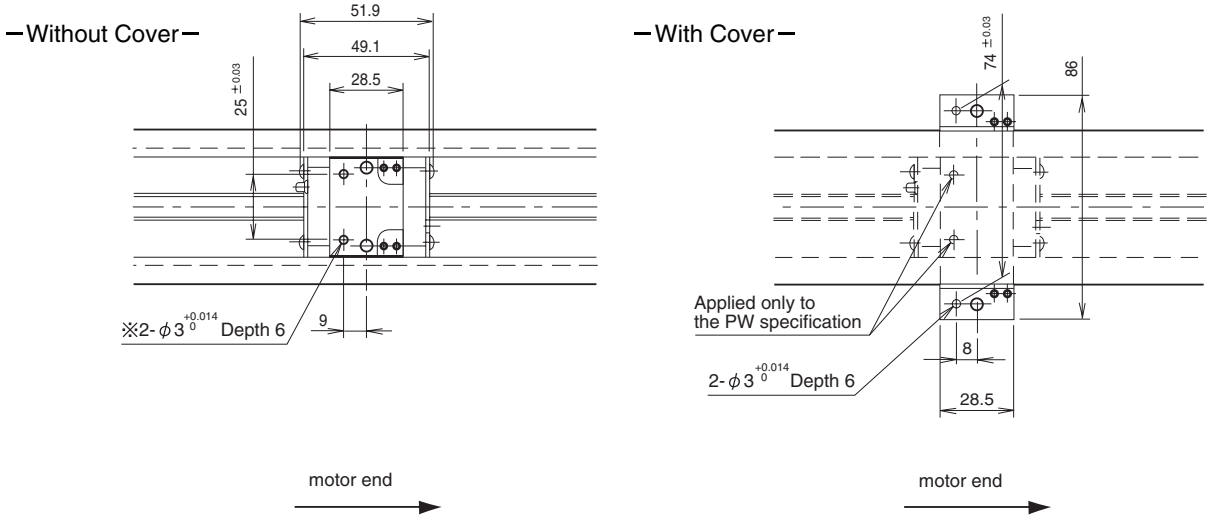

※For some cases, a shallow counter-bore of φ4 will be machined at the entrance of the area with "※" to remove a hardened layer.

www.bergab.ru Берг АБ bergab@ya.ru Тел. (495)-228-06-21, факс (495) 223-3071

www.bergab.ru Берг АБ bergab@ya.ru Тел. (495)-228-06-21, факс (495) 223-3071

BG46A,B

For the two-block type, the both blocks will be processed.

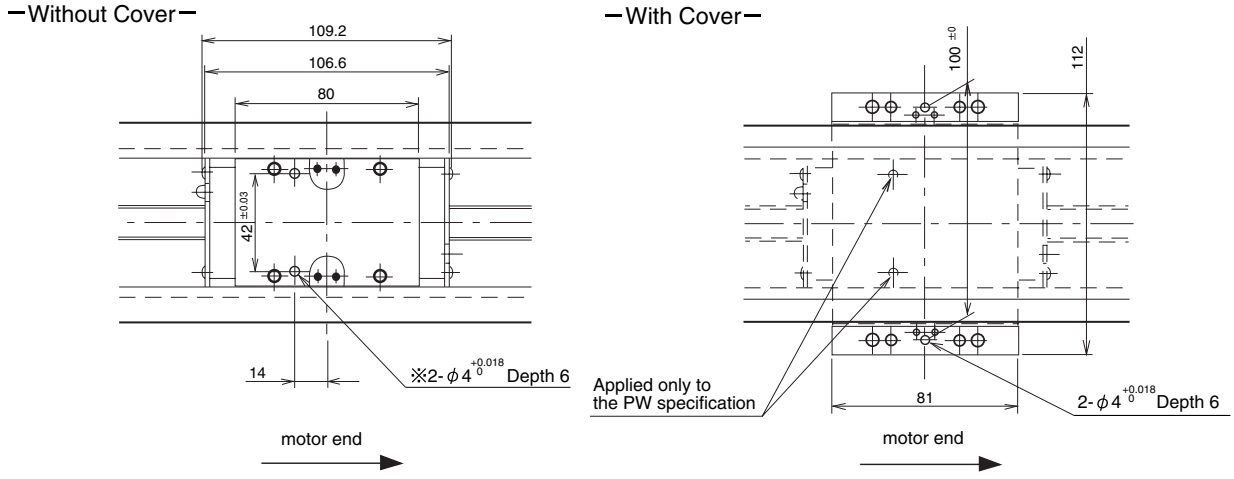

※For some cases, a shallow counter-bore of φ5 will be machined at the entrance of the area with "※" to remove a hardened layer.

BG46C,D

For the two-block type, the both blocks will be processed.

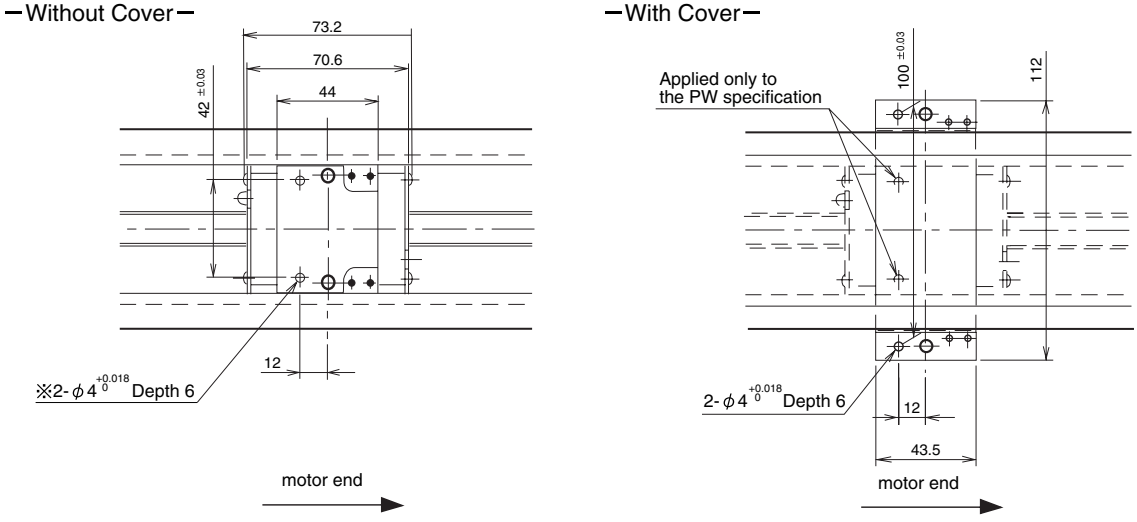

※For some cases, a shallow counter-bore of φ5 will be machined at the entrance of the area with "※" to remove a hardened layer.

www.bergab.ru Берг АБ bergab@ya.ru Тел. (495)-228-06-21, факс (495) 223-3071

www.bergab.ru Берг АБ bergab@ya.ru Тел. (495)-228-06-21, факс (495) 223-3071

BG55A,B

For the two-block type, the both blocks will be processed.

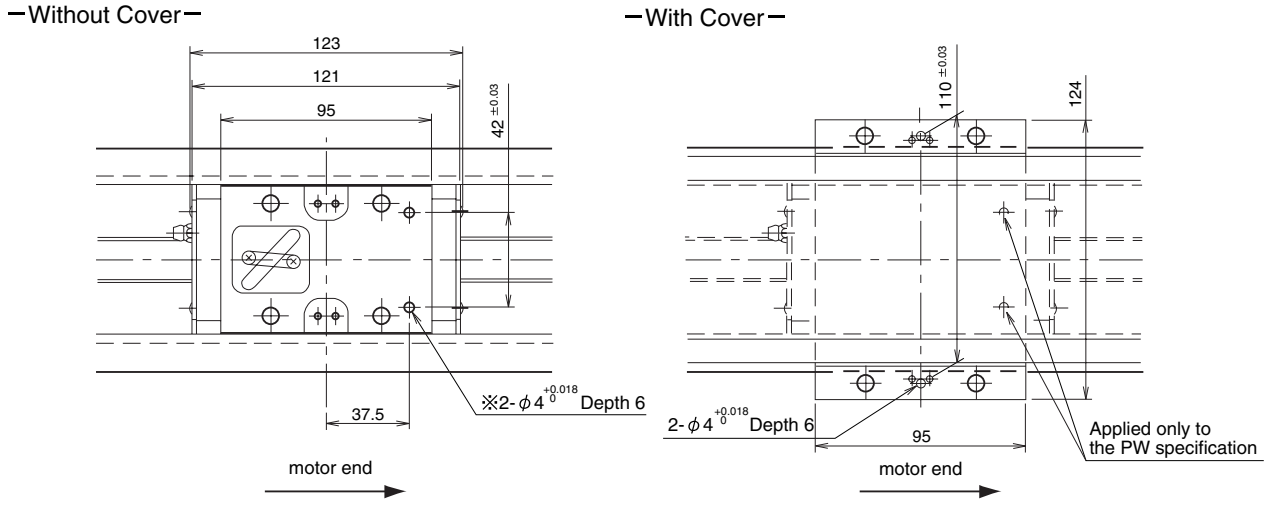

※For some cases, a shallow counter-bore of φ5 will be machined at the entrance of the area with "※" to remove a hardened layer.

www.bergab.ru Берг АБ bergab@ya.ru Тел. (495)-228-06-21, факс (495) 223-3071

BG20A,B
–Without Top-Cover–

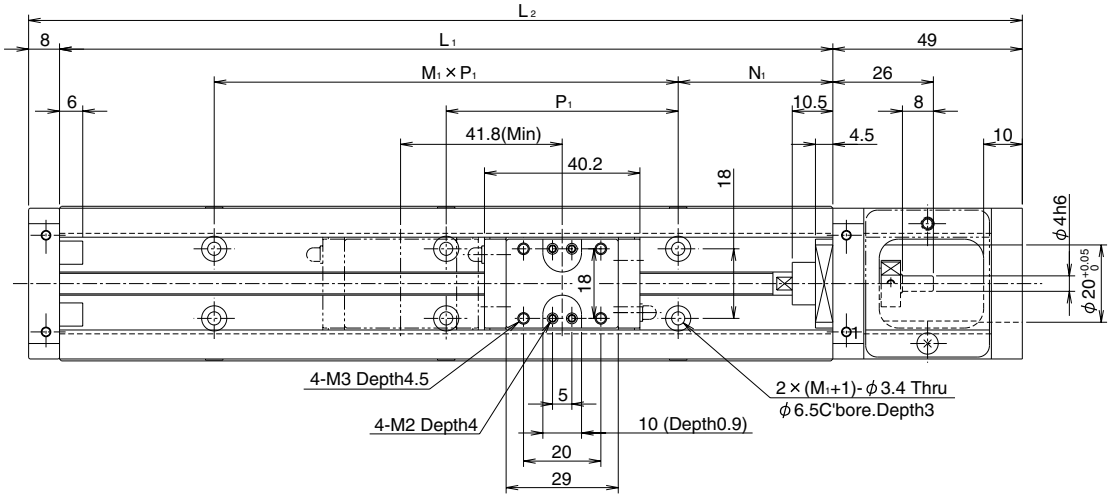

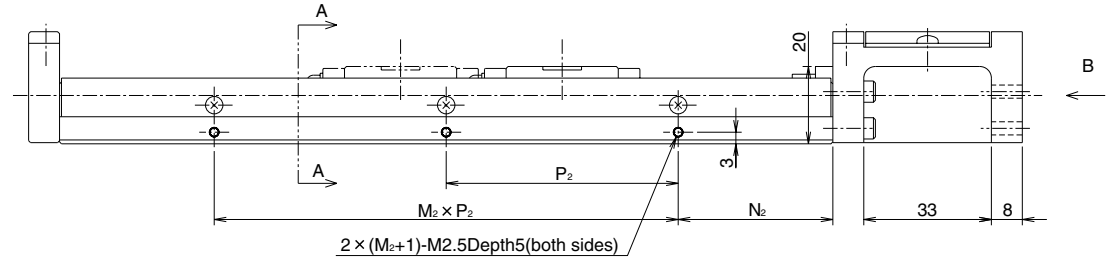

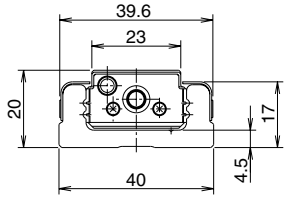

section A-A

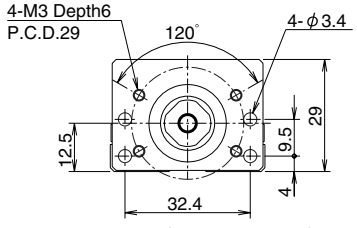

View B(motor bracket A0)
refer Page I-18 for other motor bracket

www.bergab.ru Берг АБ bergab@ya.ru Тел. (495)-228-06-21, факс (495) 223-3071

–With Top-Cover–

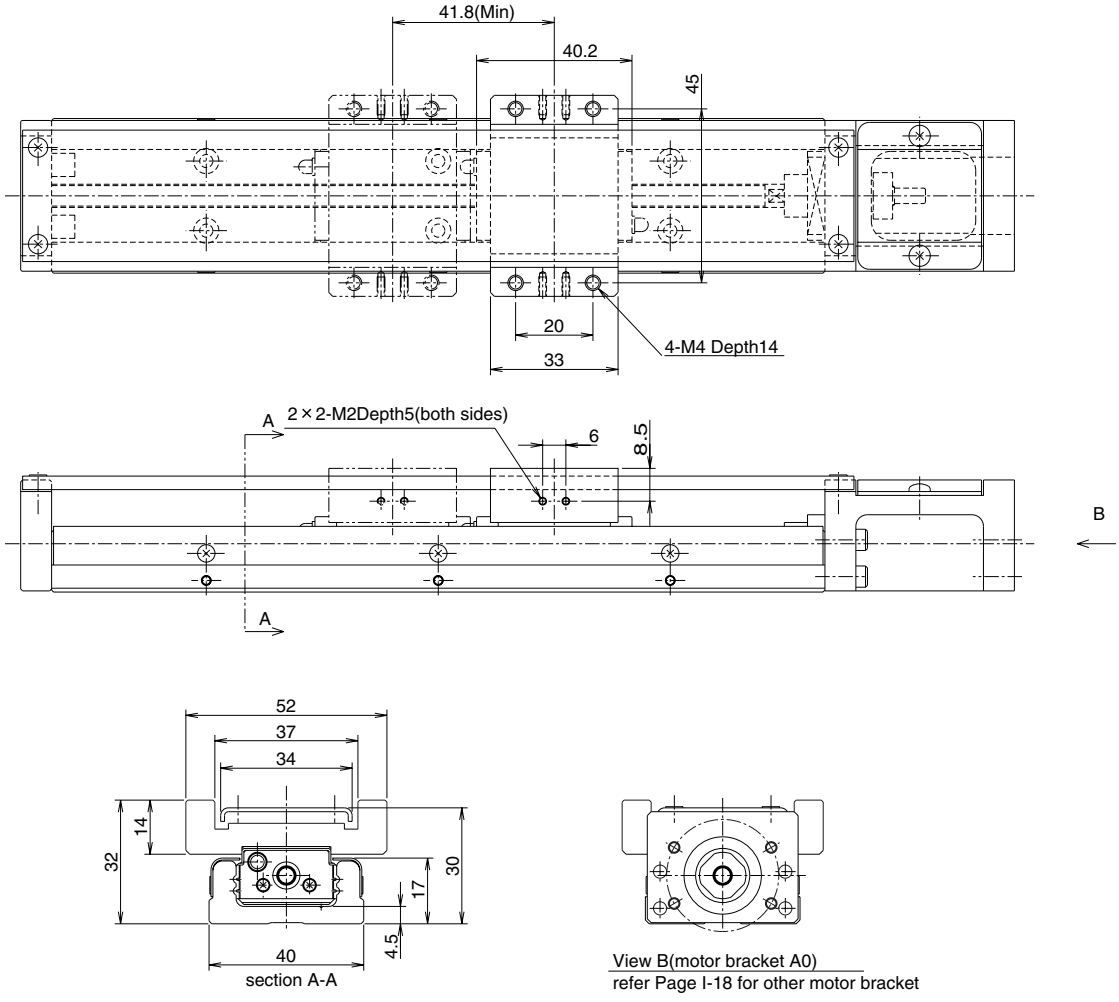

dimensions						stroke limit	
L_1	L_2	N_1	$M_1 \times P_1$	N_2	$M_2 \times P_2$	BG20A	BG20B
100	157	20	1×60	20	1×60	43	—
150	207	15	2×60	15	2×60	93	51
200	257	40		40		143	101

Stroke limit is traveling distance between both ends of the dampers.

www.bergab.ru Берг АБ bergab@ya.ru Тел. (495)-228-06-21, факс (495) 223-3071

BG26A,B
–Without Top-Cover–

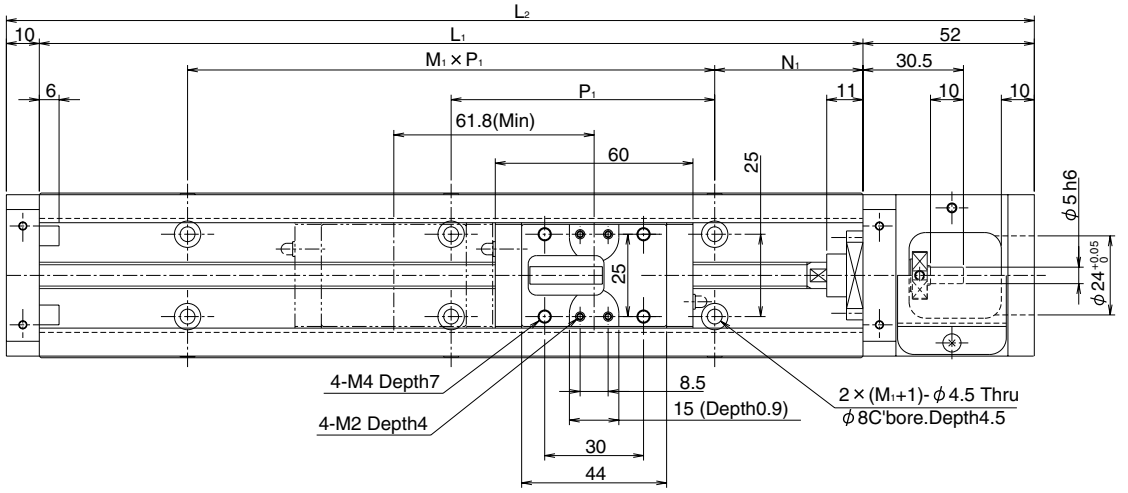

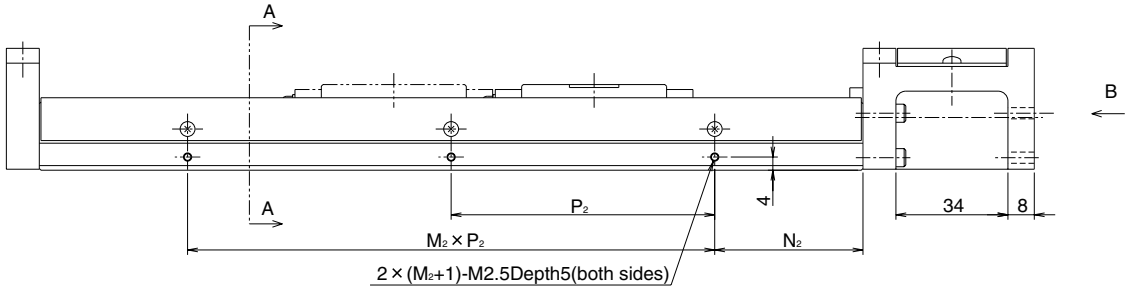

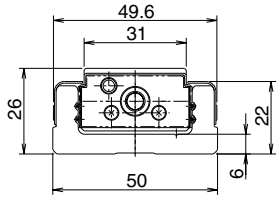

section A-A

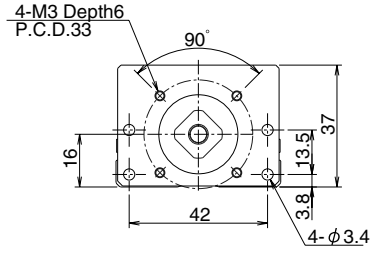

View B(motor bracket A0)
refer Page I-19 for other motor bracket

www.bergab.ru Берг АБ bergab@ya.ru Тел. (495)-228-06-21, факс (495) 223-3071

–With Top-Cover–

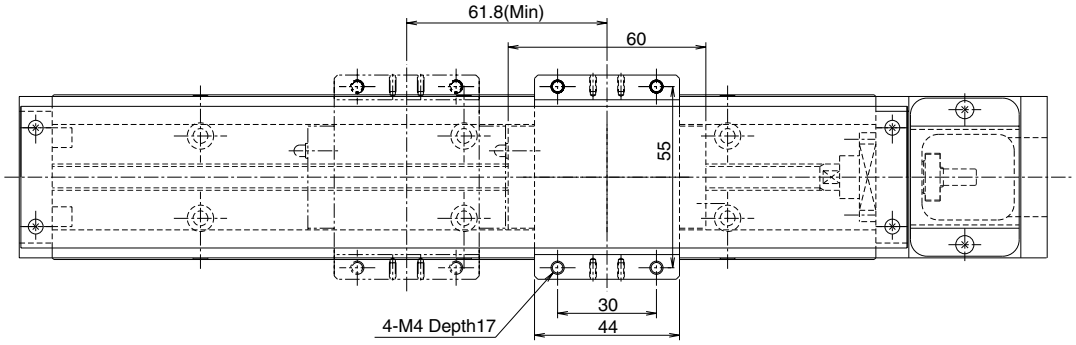

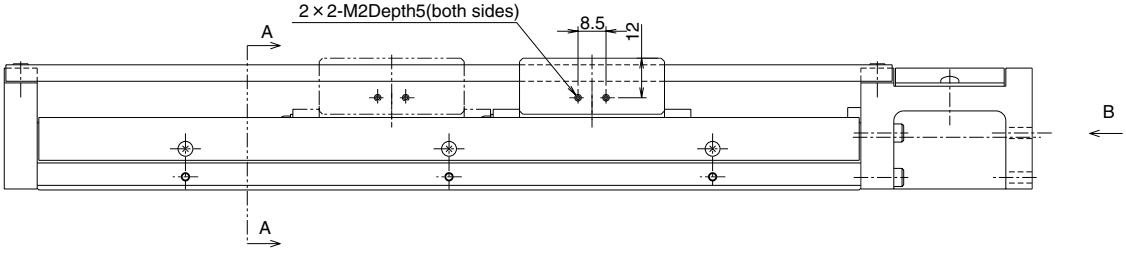

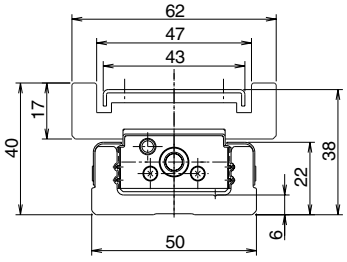

section A-A

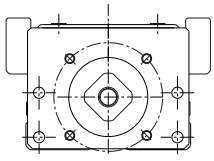

View B(motor bracket A0)
refer Page I-19 for other motor bracket

dimensions						stroke limit	
L_1	L_2	N_1	$M_1 \times P_1$	N_2	$M_2 \times P_2$	BG26A	BG26B
150	212	35	1×80	35	1×80	73	—
200	262	20	2×80	20	2×80	123	61
250	312	45		45		173	111
300	362	30	3×80	30	3×80	223	161

Stroke limit is traveling distance between both ends of the dampers.

www.bergab.ru Берг АБ bergab@ya.ru Тел. (495)-228-06-21, факс (495) 223-3071

www.bergab.ru Берг АБ bergab@ya.ru Тел. (495)-228-06-21, факс (495) 223-3071

BG33A,B
–Without Top-Cover–

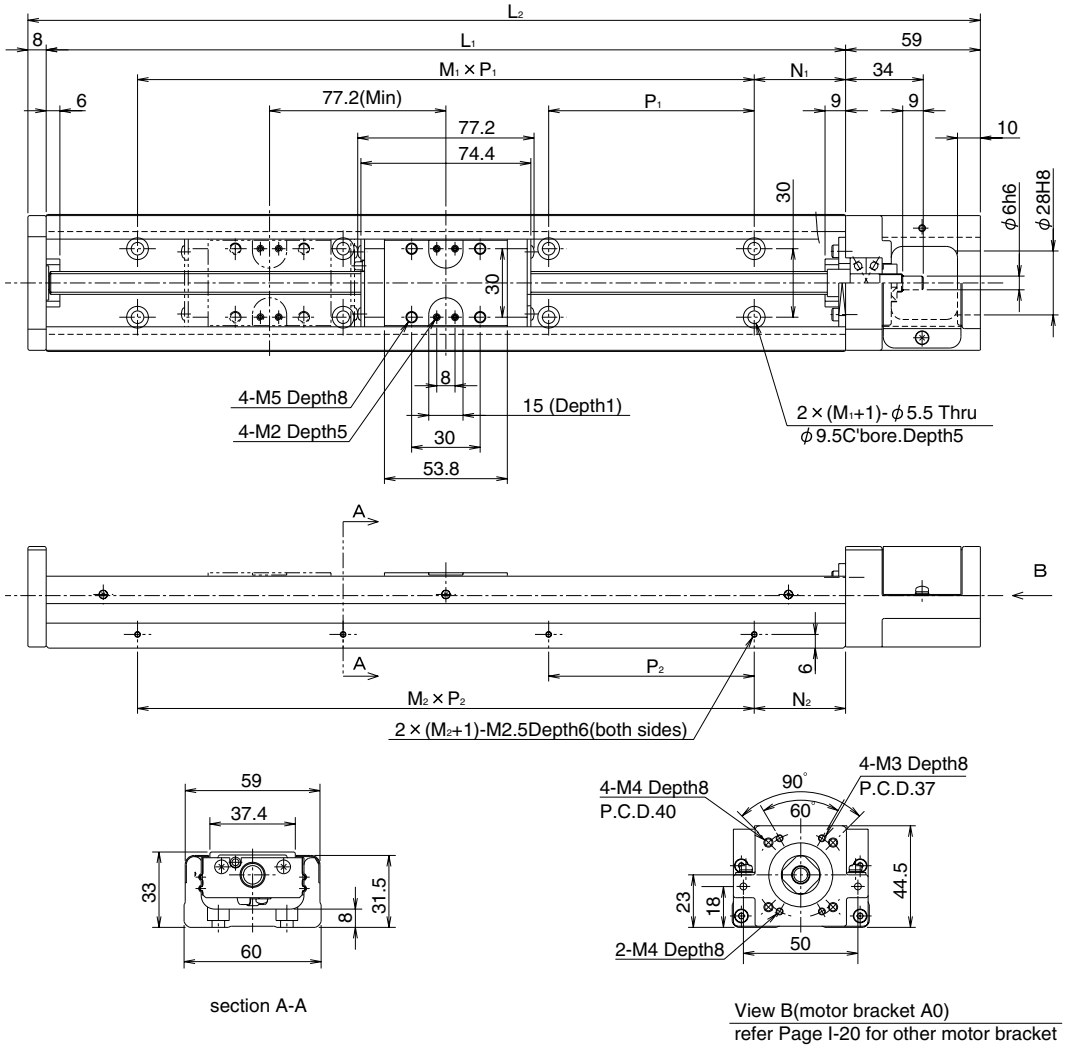

www.bergab.ru Берг АБ bergab@ya.ru Тел. (495)-228-06-21, факс (495) 223-3071

www.bergab.ru Берг АБ bergab@ya.ru Тел. (495)-228-06-21, факс (495) 223-3071

–With Top-Cover–

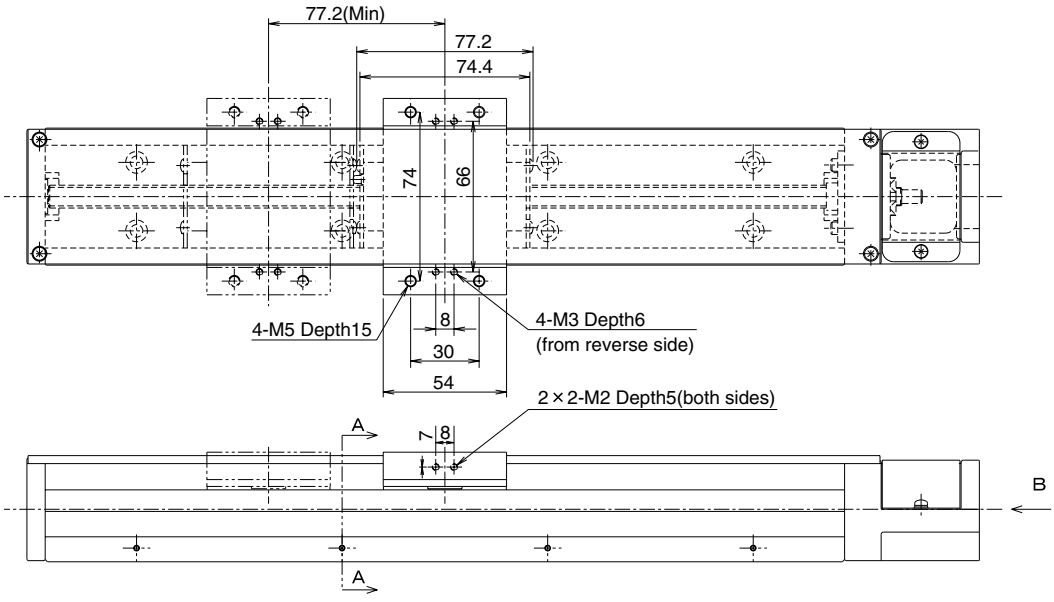

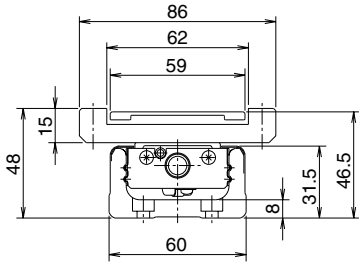

section A-A

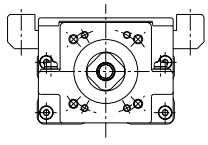

View B(motor bracket A0)
refer Page I-20 for other motor bracket

dimensions						stroke limit	
L_1	L_2	N_1	$M_1 \times P_1$	N_2	$M_2 \times P_2$	BG33A	BG33B
150	217	25	1×100	25	1×100	60	—
200	267	50		50		110	—
300	367		2×100		2×100	210	133
400	467		3×100		3×100	310	233
500	567		4×100		4×100	410	333
600	667		5×100		5×100	510	433

Stroke limit is traveling distance between both ends of the dampers.

www.bergab.ru Берг АБ bergab@ya.ru Тел. (495)-228-06-21, факс (495) 223-3071

BG33C,D
–Without Top-Cover–

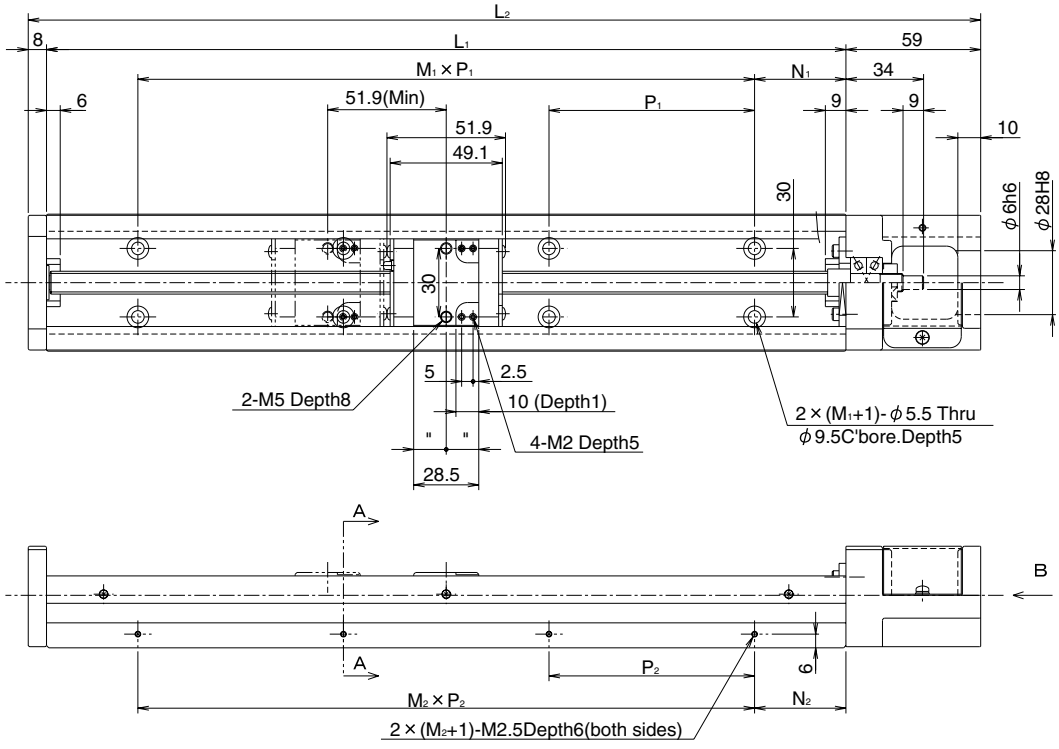

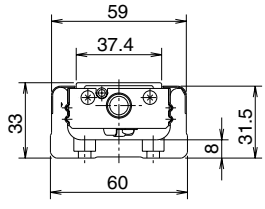

section A-A

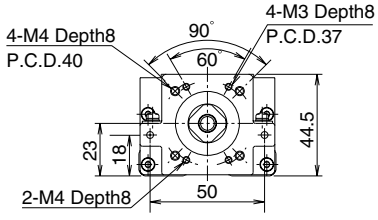

View B(motor bracket A0)
refer Page I-20 for other motor bracket

www.bergab.ru Берг АБ bergab@ya.ru Тел. (495)-228-06-21, факс (495) 223-3071

–With Top-Cover–

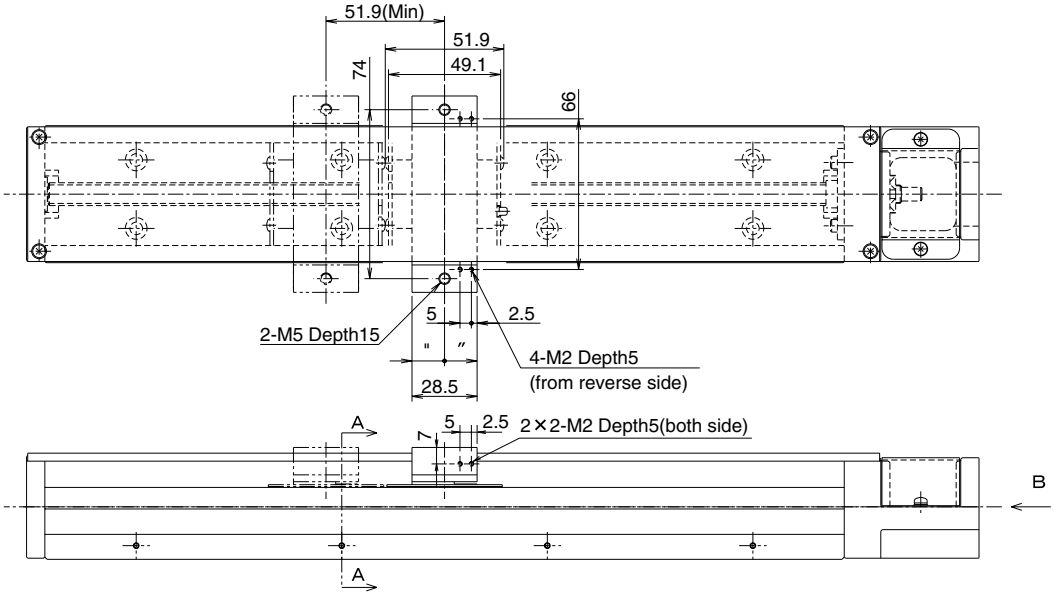

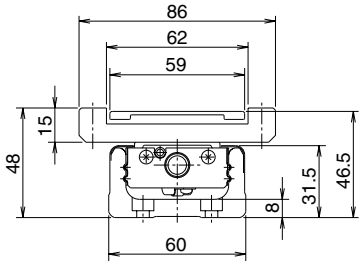

section A-A

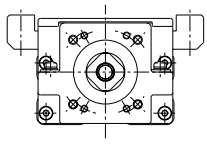

View B(motor bracket A0)
refer Page I-20 for other motor bracket

dimensions						stroke limit	
L_1	L_2	N_1	$M_1 \times P_1$	N_2	$M_2 \times P_2$	BG33C	BG33D
150	217	25	1×100	25	1×100	85	34
200	267	50		50		135	84
300	367		2×100		2×100	235	184
400	467		3×100		3×100	335	284
500	567		4×100		4×100	435	384
600	667		5×100		5×100	535	484

Stroke limit is traveling distance between both ends of the dampers.

www.bergab.ru Берг АБ bergab@ya.ru Тел. (495)-228-06-21, факс (495) 223-3071

BG46A,B
–Without Top-Cover–

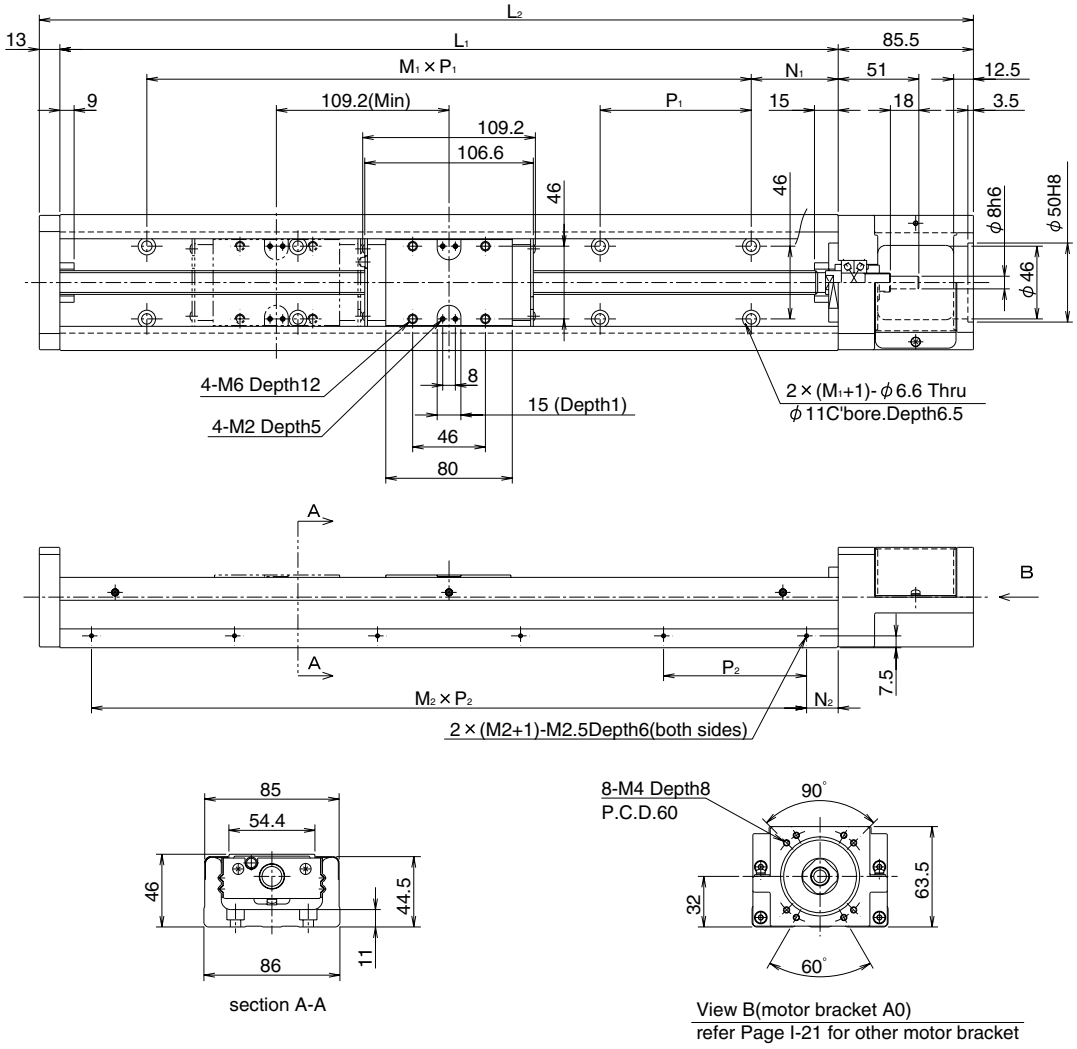

www.bergab.ru Берг АБ bergab@ya.ru Тел. (495)-228-06-21, факс (495) 223-3071

–With Top-Cover–

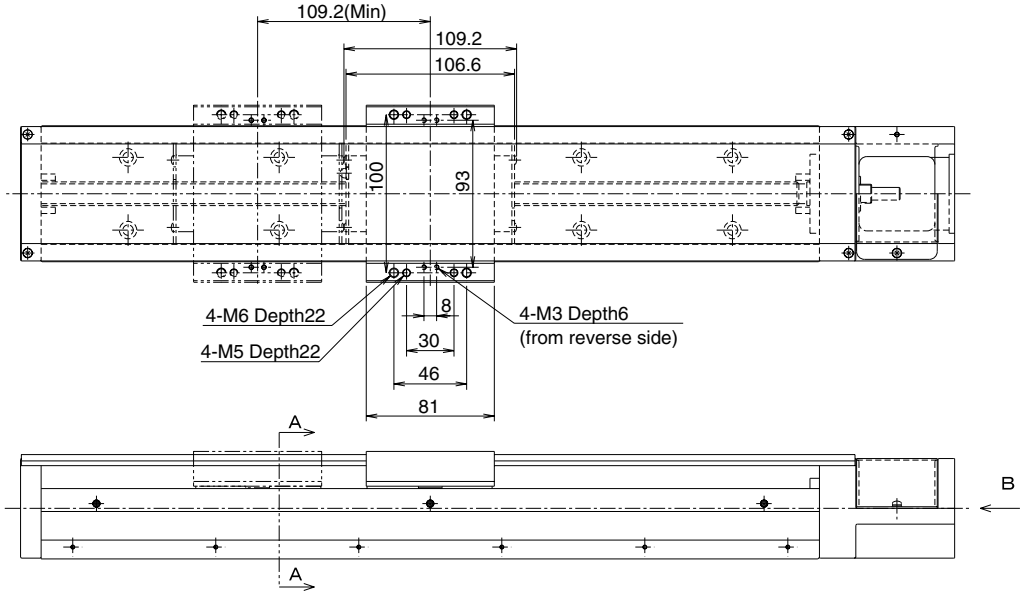

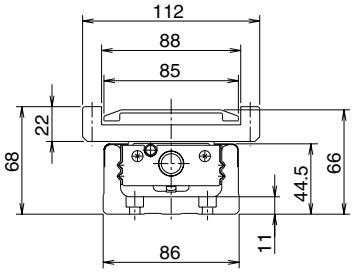

section A-A

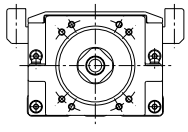

View B(motor bracket A0)
refer Page I-21 for other motor bracket

dimensions						stroke limit	
L_1	L_2	N_1	$M_1 \times P_1$	N_2	$M_2 \times P_2$	BG46A	BG46B
340	438.5	70	2×100	20	3×100	209	100
440	538.5		3×100		4×100	309	200
540	638.5		4×100		5×100	409	300
640	738.5		5×100		6×100	509	400
740	838.5		6×100		7×100	609	500
840	938.5		7×100		8×100	709	600
940	1,038.5		8×100		9×100	809	700
1,040	1,138.5		9×100		10×100	909	800
1,140	1,238.5		10×100		11×100	1,009	900
1,240	1,338.5		11×100		12×100	1,109	1,000

Stroke limit is traveling distance between both ends of the dampers.

www.bergab.ru Берг АБ bergab@ya.ru Тел. (495)-228-06-21, факс (495) 223-3071

BG46C,D
–Without Top-Cover–

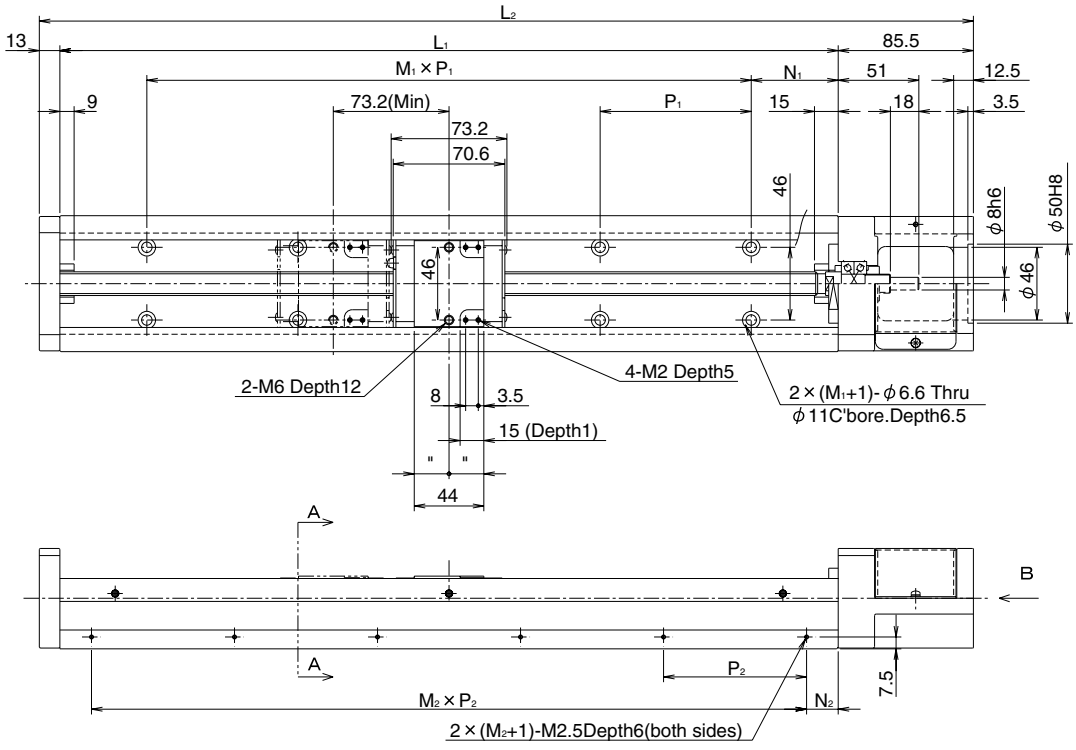

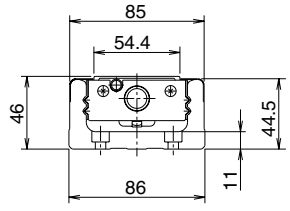

section A-A

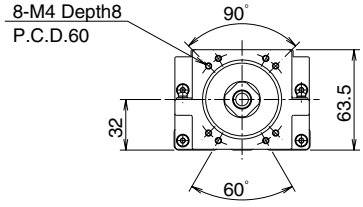

View B(motor bracket A0)
refer Page I-21 for other motor bracket

www.bergab.ru Берг АБ bergab@ya.ru Тел. (495)-228-06-21, факс (495) 223-3071

–With Top-Cover–

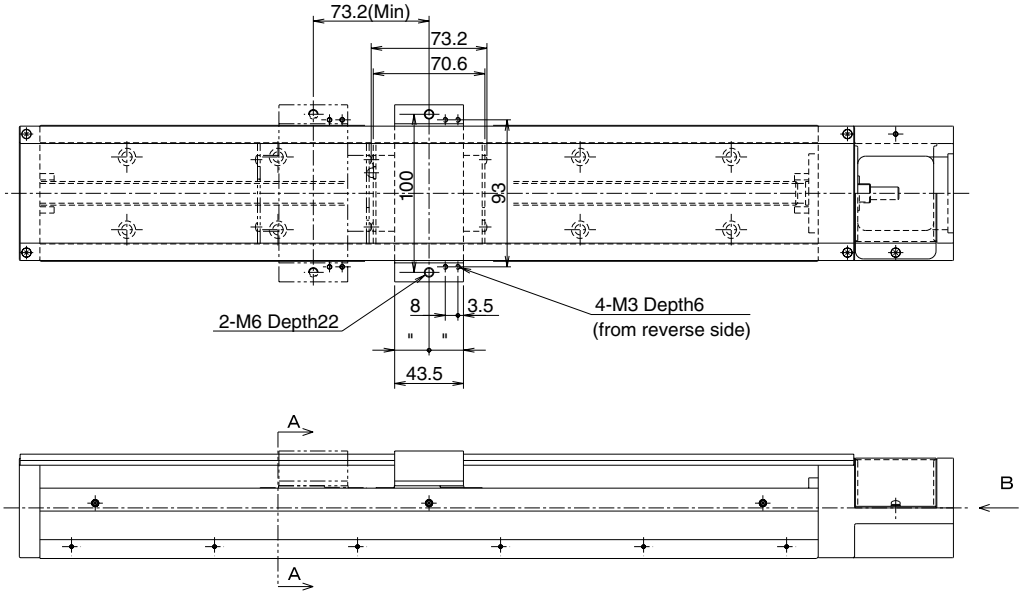

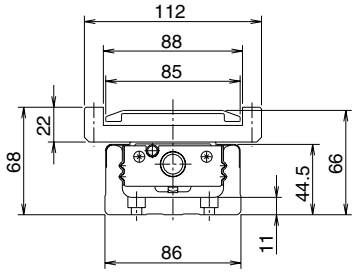

section A-A

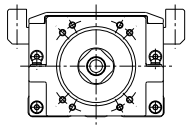

View B(motor bracket A0)
refer Page I-21 for other motor bracket

dimensions						stroke limit	
L_1	L_2	N_1	$M_1 \times P_1$	N_2	$M_2 \times P_2$	BG46C	BG46D
340	438.5	70	2×100	20	3×100	245	172
440	538.5		3×100		4×100	345	272
540	638.5		4×100		5×100	445	372
640	738.5		5×100		6×100	545	472
740	838.5		6×100		7×100	645	572
840	938.5		7×100		8×100	745	672
940	1,038.5		8×100		9×100	845	772
1,040	1,138.5		9×100		10×100	945	872
1,140	1,238.5		10×100		11×100	1,045	972
1,240	1,338.5		11×100		12×100	1,145	1,072

Stroke limit is traveling distance between both ends of the dampers.

www.bergab.ru Берг АБ bergab@ya.ru Тел. (495)-228-06-21, факс (495) 223-3071

www.bergab.ru Берг АБ bergab@ya.ru Тел. (495)-228-06-21, факс (495) 223-3071

BG55A,B
–Without Top-Cover–

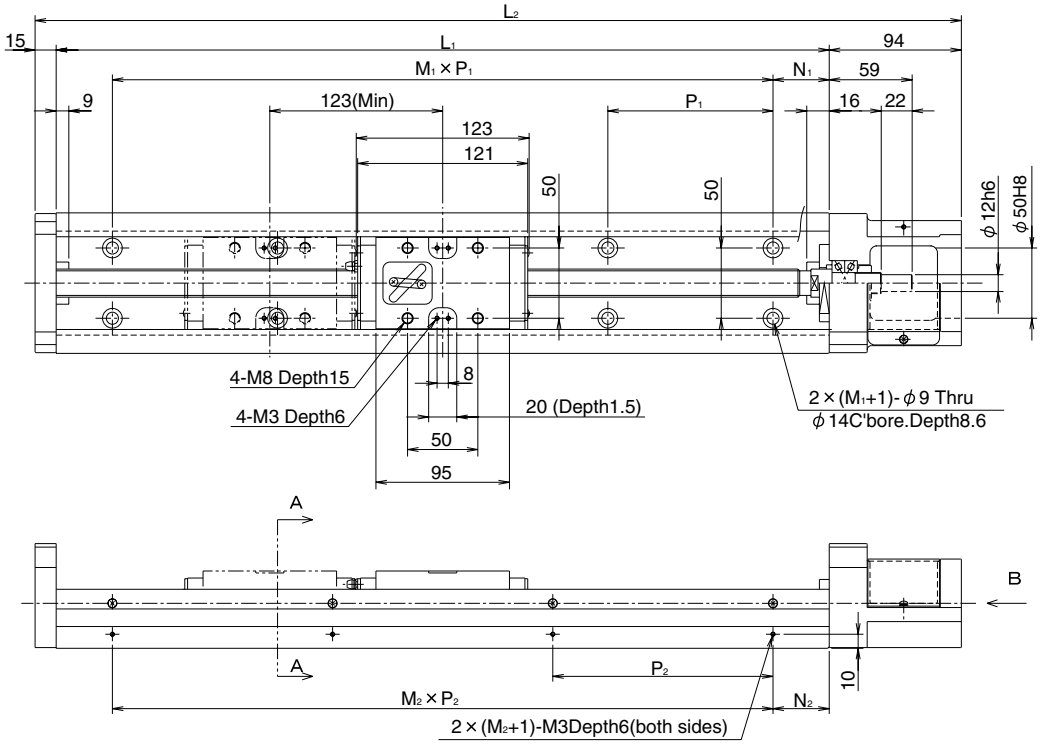

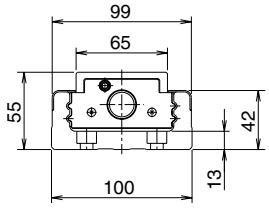

section A-A

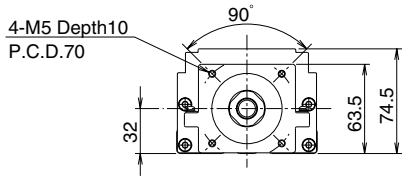

View B(motor bracket A0)
refer Page I-22 for other motor bracket

www.bergab.ru Берг АБ bergab@ya.ru Тел. (495)-228-06-21, факс (495) 223-3071

www.bergab.ru Берг АБ bergab@ya.ru Тел. (495)-228-06-21, факс (495) 223-3071

–With Top-Cover–

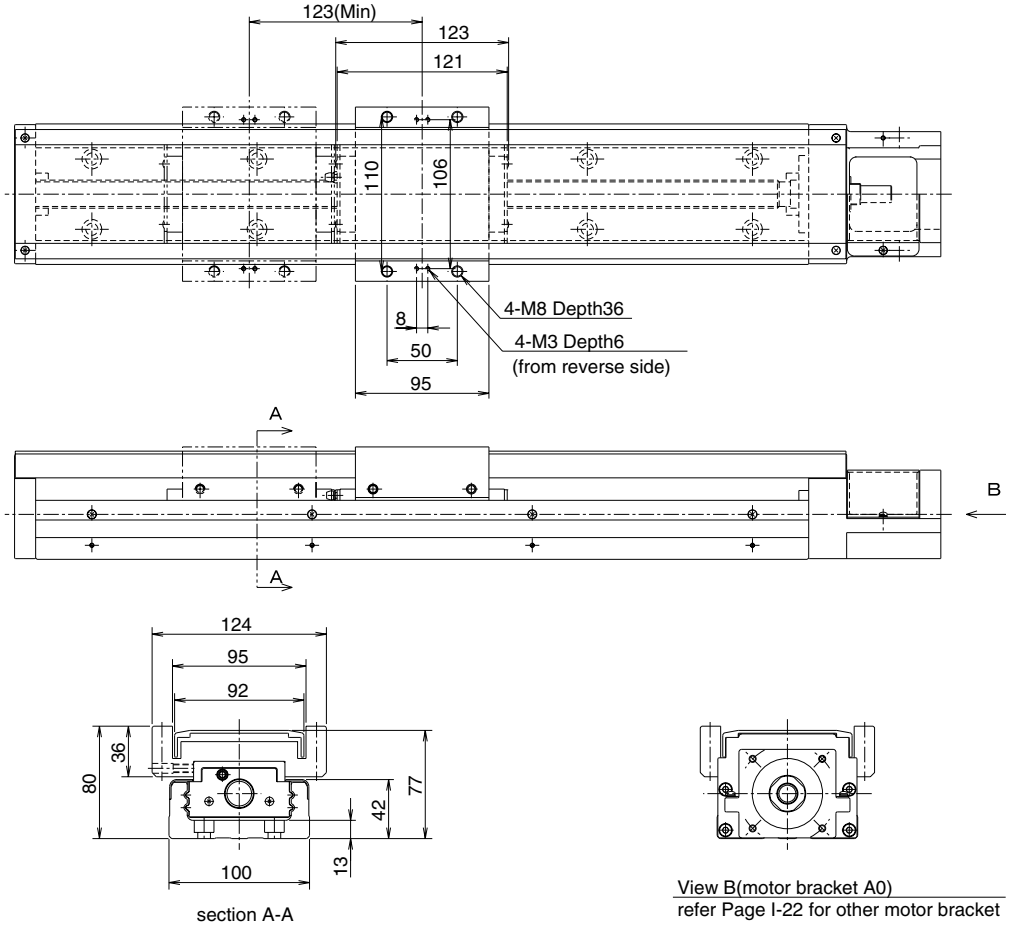

dimensions						stroke limit	
L_1	L_2	N_1	$M_1 \times P_1$	N_2	$M_2 \times P_2$	BG55A	BG55B
980	1089	40	6×150	90	4×200	834	711
1080	1189	15	7×150	40	5×200	934	811
1180	1289	65		90		1034	911
1280	1389	40	8×150	40	6×200	1134	1011
1380	1489	15	9×150	90		1234	1111

Stroke limit is traveling distance between both ends of the dampers.

www.bergab.ru Берг АБ bergab@ya.ru Тел. (495)-228-06-21, факс (495) 223-3071