www.bergab.ru Берг АБ bergab@ya.ru Тел. (495)-228-06-21, факс (495) 223-3071

NIPPON BEARING CO., LTD.
2833 Chiya,Ojiya-city,Niigata-pref.,947-8503 JAPAN
Phone:81-258-82-0011 FAX:81-258-81-1135
http://www.nb-linear.co.jp

NB Corporation of America
930 Muirfield Drive, Hanover Park, IL 60133, U.S.A.
Phone:1(630)295-8880 FAX:1(630)295-8881
TOLL FREE:(800)521-2045

Western Regional Office
2157 O'Toole Ave., Suite D, San Jose, CA 95131, U.S.A.
Phone:1(408)435-1800 FAX:1(408)435-1850
TOLL FREE:(888)562-4175

Eastern Regional Office
41 Orchard Street, Ramsey, NJ 07446, U.S.A.
Phone:1(201)236-3886 FAX:1(201)236-5112
TOLL FREE:(800)981-8190

http://www.nbcorporation.com
info@nbcorporation.com

NB Europe B.V.
Boekweitstraat 21, 2153 GK Nieuw-Vennep, The Netherlands
Phone:+31(0)252-463-200 FAX:+31(0)252-463-209
http://www.nbeurope.com
info@nbeurope.com

LINEAR SYSTEM

No.171E

NIPPON BEARING CO., LTD.

NB

LINEAR SYSTEM

General Catalog No.171E

ISO9001/ISO14001

NIPPON BEARING CO., LTD.

www.bergab.ru Берг АБ bergab@ya.ru Тел. (495)-228-06-21, факс (495) 223-3071

www.bergab.ru Берг АБ bergab@ya.ru Тел. (495)-228-06-21, факс (495) 223-3071

CONTENTS

NB LINEAR SYSTEM
TECHNICAL INFORMATION Eng-1～42

SLIDE GUIDE A-1～85

BALL SPLINE
ROTARY BALL SPLINE
STROKE BALL SPLINE B-1～39

SLIDE BUSH C-1～161

TOP BALL® D-1～21

STROKE BUSH
SLIDE ROTARY BUSH E-1～23

SHAFT F-1～29

SLIDE WAY•SLIDE TABLE
MINIATURE SLIDE
GONIO WAY G-1～64

ACTUATOR H-1～69

SLIDE SCREW I-1～7

TECHNICAL REFERENCE Tech-1～7
INDEX INDEX-1～11

www.bergab.ru Берг АБ bergab@ya.ru Тел. (495)-228-06-21, факс (495) 223-3071

www.bergab.ru Берг АБ bergab@ya.ru Тел. (495)-228-06-21, факс (495) 223-3071

SLIDE GUIDE

SEBS-B/BY P.A-26
SEBS-BM/BYM P.A-26

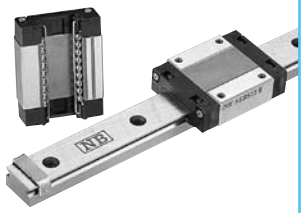

SEBS-WB/WBY P.A-28

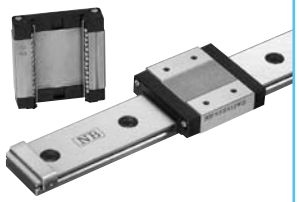

SEB-A/AY P.A-30

SEB-WA/WAY P.A-32

SER-A P.A-38

SER-WA P.A-40

SGL-F P.A-48

SGL-TF P.A-50

SGL-HTF P.A-52

SGL-HYF P.A-54

SGL-E P.A-56

SGL-TE P.A-58

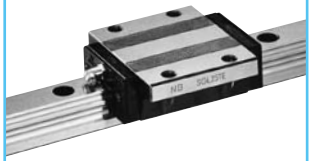

SGL-HTE P.A-60

SGL-HYE P.A-62

SGL-HTEX P.A-64

GL-F P.A-66

GL-TF P.A-68

GL-HTF P.A-70

GL-E P.A-72

GL-TE P.A-74

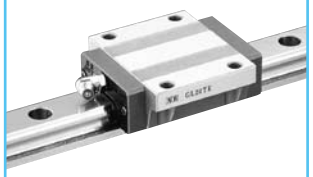

GL-HTE P.A-76

SGW-TF P.A-82

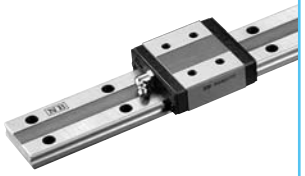

SGW-TE P.A-84

www.bergab.ru Берг АБ bergab@ya.ru Тел. (495)-228-06-21, факс (495) 223-3071

www.bergab.ru Берг АБ bergab@ya.ru Тел. (495)-228-06-21, факс (495) 223-3071

BALL SPLINE/ROTARY BALL SPLINE/STROKE BALL SPLINE

SSP P.B-14

SSPM P.B-16

SSPF P.B-18

SSPT P.B-20

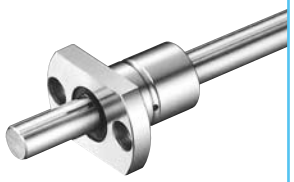

SSPB P.B-22

SSP-S P.B-24

SSP-C P.B-25

SPR P.B-32

SPLFS P.B-38

SLIDE BUSH

SM P.C-14
KB P.C-68
SW P.C-90

SM-AJ P.C-16
KB-AJ P.C-70
SW-AJ P.C-92

SM-OP P.C-18
KB-OP P.C-72
SW-OP P.C-94

SM-G-L P.C-20

SM-W P.C-22
KB-W P.C-74
SW-W P.C-96

SMF P.C-24
KBF P.C-76
SWF P.C-98

SMK P.C- 26
KBK P.C- 78
SWK P.C-100

SMT P.C- 28
KBT P.C- 80
SWT P.C-102

SMF-E P.C-30

SMK-E P.C-32

SMT-E P.C-34

SMK-G-L P.C-36

SMF-W P.C- 38
KBF-W P.C- 82
SWF-W P.C-104

SMK-W P.C- 40
KBK-W P.C- 84
SWK-W P.C-106

SMT-W P.C-42

www.bergab.ru Берг АБ bergab@ya.ru Тел. (495)-228-06-21, факс (495) 223-3071

www.bergab.ru Берг АБ bergab@ya.ru Тел. (495)-228-06-21, факс (495) 223-3071

SMFC P.C- 44
KBFC P.C- 86
SWFC P.C-108

SMKC P.C- 46
KBKC P.C- 88
SWKC P.C-110

SMTC P.C-48

SMF-W-E P.C-50

SMK-W-E P.C-52

SMT-W-E P.C-54

TRF P.C-56

TRK P.C-58

TRFC P.C-60

TRKC P.C-62

TRF-E P.C-64

TRK-E P.C-66

GM P.C-112
GW P.C-126

GM-W P.C-113

GMF-W P.C-114

GMK-W P.C-116

GMT-W P.C-118

GMF-W-E P.C-120

GMK-W-E P.C-122

GMT-W-E P.C-124

SMA P.C-128

SMA-W P.C-130

AK P.C-132

AK-W P.C-134

www.bergab.ru Берг АБ bergab@ya.ru Тел. (495)-228-06-21, факс (495) 223-3071

www.bergab.ru Берг АБ bergab@ya.ru Тел. (495)-228-06-21, факс (495) 223-3071

SMB P.C-136

SMP P.C-138

SMJ P.C-140

SME P.C-142

SME-W P.C-144

SMD P.C-146

RB P.C-148
RBW P.C-160

CE P.C-150

CD P.C-152

SWA P.C-154

SWJ P.C-156

SWD P.C-158

TOP BALL

TK P.D-6

TK-OP P.D-6

TW P.D-8

TW-OP P.D-8

TKA P.D-10

TKA-W P.D-11

TKE P.D-12

TKE-W P.D-13

TKD P.D-14

TKD-W P.D-15

TWA P.D-16

TWA-W P.D-17

www.bergab.ru Берг АБ bergab@ya.ru Тел. (495)-228-06-21, факс (495) 223-3071

www.bergab.ru Берг АБ bergab@ya.ru Тел. (495)-228-06-21, факс (495) 223-3071

TWJ P.D-18

TWJ-W P.D-19

TWD P.D-20

TWD-W P.D-21

STROKE BUSH／SLIDE ROTARY BUSH

SR P.E-4

SR-UU P.E-5

SR-B P.E-6

SR-BUU P.E-7

SRE P.E-12

SREK P.E-14
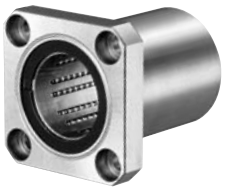

SMA-R P.E-16

SMA-RW P.E-17

AK-R P.E-18

AK-RW P.E-19

SMP-R P.E-20

RK P.E-23

SHAFT

SN P.F- 6
SNW P.F-10

SNS P.F- 7
SNWS P.F-11

SNT P.F-8

SNB/SNSB P.F- 9
SNW-PD/SNWS-PD P.F-12

SH-A P.F-15

SH PF-16

www.bergab.ru Берг АБ bergab@ya.ru Тел. (495)-228-06-21, факс (495) 223-3071

www.bergab.ru Берг АБ bergab@ya.ru Тел. (495)-228-06-21, факс (495) 223-3071

SHF P.F-17
SHF-FC

SA P.F-18

WH-A P.F-20

WA P.F-22

LWA P.F-23

SLIDE WAY／SLIDE TABLE／MINIATURE SLIDE／GONIO WAY

NV P.G-10

SV P.G-14

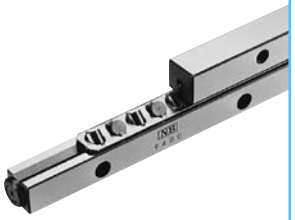

SVW P.G-22

NVT P.G-28

SVT P.G-32

SYT P.G-38

SYT-D P.G-42

SYBS P.G-50

RVF P.G-60

RV P.G-62

CR P.G-64

ACTUATOR

BG P.H-1

SLIDE SCREW

SS P.I-7

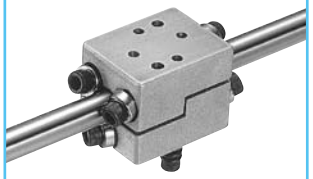

www.bergab.ru Берг АБ bergab@ya.ru Тел. (495)-228-06-21, факс (495) 223-3071

www.bergab.ru Берг АБ bergab@ya.ru Тел. (495)-228-06-21, факс (495) 223-3071

NB LINEAR SYSTEM

The NB linear system is a linear motion mechanism which utilizes the rotational motion of ball and/or roller elements. NB offers a wide range of linear motion products of high precision quality that contribute to the size and weight reduction of machinery and equipment.

ADVANTAGES

Low Friction and Excellent Response

The dynamic friction of the ball or roller elements is substantially lower than that of full-face surface sliding friction. Since the difference between dynamic and static frictional resistance is small, motion response is excellent in terms of positioning accuracy and in high speed applications with acceleration and deceleration.

High Precision and Smooth Movement

The NB linear system is designed for the rolling elements to achieve extremely smooth motion. The raceway surface is finished by precision grinding for high precision movement with optimal clearance.

High Load Capacity and Long Travel Life

Despite the compactness of the NB linear system, the system uses relatively large rolling elements on a long raceway resulting in a high load capacity and a long travel life.

Ease of Installation

The NB linear system shortens machining and assembly time compared with that of a full-face surface sliding bearing.

Variety of Types

A wide variety of types and sizes of the NB linear systems are available to best serve the purpose for every application and requirement.

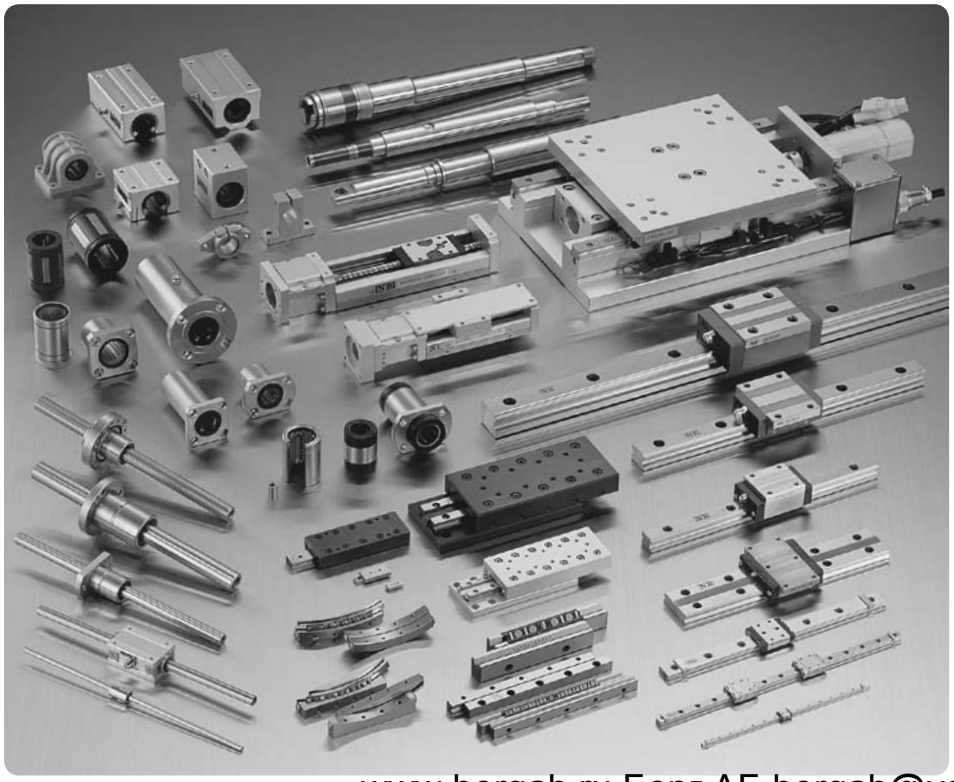

PROCESS FOR SELECTING NB LINEAR SYSTEM

Check the application conditions
Identify machine type to be used, application conditions, environmental conditions, and desired accuracy.

↓

Decide system type
Slide Guide
Ball Spline
Slide Bush
Slide Way

↓

Pre-select the size and number of linear systems
Pre-select the size and number based on balance of machinery and other equipment as well as past experience.

↓

Calculate load
Calculate load on each system.
Calculate average variable load.
(refer to page Eng-6-8)

↓

Determine static load
Determine basic static load rating and allowable static moment by applying static safety factor.
(refer to page Eng-3)

NG → Decide system type

OK ↓

Compute rated life
Compute rated life and compare to required life.
(refer to page Eng-4)

NG → Decide system type

OK ↓

Determine preload and accuracy
Decide preload and accuracy based on the operating conditions.
(refer to each product description for preload and accuracy)

NG → Decide system type

OK ↓

Select lubrication and dust prevention method
Select lubrication and dust prevention method. (seals, bellows, covers)

OK ↓

Confirm the space needed in the equipment
Confirm space and installation dimensions in consideration of the machine size and ease of maintenance.

NG → Decide system type

OK ↓

Selection completed

www.bergab.ru Берг АБ bergab@ya.ru Тел. (495)-228-06-21, факс (495) 223-3071

www.bergab.ru Берг АБ bergab@ya.ru Тел. (495)-228-06-21, факс (495) 223-3071

ALLOWABLE LOAD

Load and Moment

A load is applied to the linear system as Figure 1-1 shows. Sometimes moment loads are applied to, for example, slide guides. Load and moment are defined as follows.

Basic Static Load Rating (compliant with ISO14728-2*1) and Allowable Static Moment

When excess load or impact load is applied to the linear system while it is stationary or moving slowly, a permanent deformation occurs on the rolling elements and the race way.
If this deformation exceeds a certain limit, it causes vibration and noise during operation resulting in a non-smooth motion and a shorter life time. To prevent this permanent deformation and deterioration in motion accuracy, the basic static load rating (Co) is given as the allowable load for the linear system. This basic static load rating is defined as the static load that results in the maximum allowable stress at the center of the contact surface between the rolling elements and the race way. The sum of the permanent deformation of the rolling element and that of the race way is 0.0001 time the diameter of the rolling element. In the linear system, a moment load may be present in addition to the static load. The allowable static moments are defined by M_P, M_Y, and M_R as illustrated in Figure 1-1.

*1: This does not apply to some products.

Allowable Load and Static Safety Factor

The basic static load rating and allowable static moment define the maximum static load in each direction, however, these maximum static loads are not necessarily applicable depending on the operating conditions, the mounting accuracy, and the required motion accuracy. Therefore, an allowable load with a safety factor must be obtained. The minimum static safety factor is listed in Table 1-1.

Allowable Load

$$P_{max.} \leqq C_O / f_S \quad \cdots\cdots (1)$$

Allowable Moment

$$M_{max.} \leqq (M_P, M_Y, M_R) / f_S \quad \cdots\cdots (2)$$

f_S: static safety factor C_O: basic static load rating (N)
$P_{max.}$: allowable load (N)
M_P, M_R, M_Y: allowable static moment (N・m)
$M_{max.}$: allowable moment (N・m)

Figure 1-1 Load and Moment

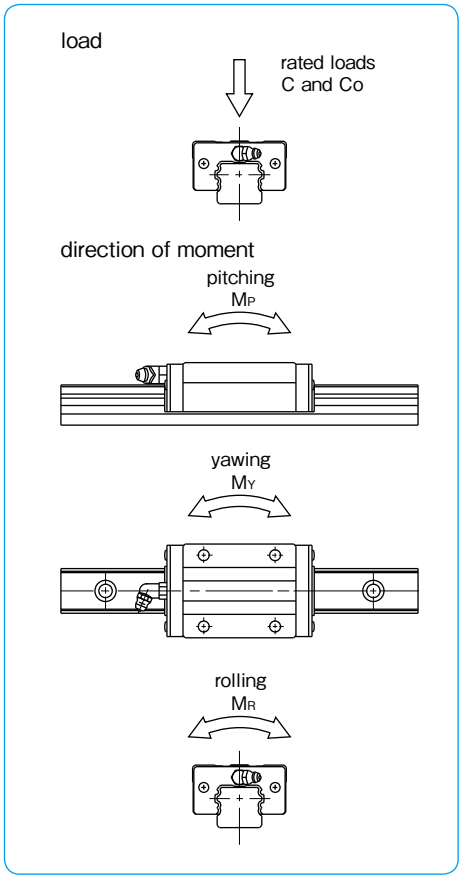

Table 1-1 Minimum Static Safety Factor (fs)

operating conditions	static safety factor
normal	1~2
smooth motion required	2~4
vibration/impact loading	3~5

LIFE

Life of a Linear System

When a linear system reciprocates under loading, a continuous stress acts on it, ultimately causing flaking of its race way surface due to material fatigue. The distance a linear system travels before this flaking occurs is defined as the life of the linear system. A linear system can also become inoperable due to sintering, cracking, pitting, or rusting, however, these causes are differentiated from flaking because they are related to installation accuracy, operating environment, and relubrication method.

Rated Life

Even when a group of linear systems from the same production lot operated under identical conditions, the life time can differ due to differences in the material fatigue failure characteristics. This fact prevents from determining the exact life time of a single linear system for use. Therefore, the rated life is defined statistically as the distance of 90% of the linear systems travel before causing flaking.

Basic Dynamic Load Rating (compliant with ISO14728-1*2) and Basic Dynamic Torque Rating

The life of a linear system is expressed in terms of the distance traveled. Therefore, the life of a linear system is calculated reversely by using the allowable load that achieves a certain travel distance. This allowable load is called the basic dynamic load rating. The basic dynamic load rating is defined as a constant load in weight and direction that can achieve a travel distance of 50×10^3m on the linear system. NB assumes the load is applied from the top as a normal radial load, because basic dynamic load ratings change depending on the applied load direction. The basic dynamic load ratings in the dimensional tables are based on this assumption. Ball splines can carry torque loading, so the basic dynamic torque rating is defined for the Ball Spline.

*2: This does not apply to some products.

Rated Life Estimation

The rated life estimation depends on the type of the rolling element. Equations (3) and (4) are used for the ball element and for the roller element, respectively. Equation (5) is used when torque loading is present.

balls are used as the rolling element

$$L = \left(\frac{C}{P}\right)^3 \cdot 50 \quad \cdots\cdots (3)$$

rollers are used as the rolling element

$$L = \left(\frac{C}{P}\right)^{10/3} \cdot 50 \quad \cdots\cdots (4)$$

torque loading is present

$$L = \left(\frac{C_T}{T}\right)^3 \cdot 50 \quad \cdots\cdots (5)$$

L: rated life (km) C: basic dynamic load rating (N)
P: applied load (N) C_T: basic dynamic torque rating (N・m)
T: applied torque(N・m)

In the actual application, numerous variable factors are present such as in guide rail/shaft accuracy, in mounting conditions, in operating conditions, vibration and shock, etc. Therefore, calculating the actual applied load accurately is extremely difficult. In general, the calculation is simplified by using coefficients representing these factors: hardness coefficient (f_H), temperature coefficient (f_T), contact coefficient (f_C), and applied load coefficient (f_W). Taking these coefficients into account, Equations (3) to (5) become Equations (6) to (8).

balls are used as the rolling element

$$L = \left(\frac{f_H \cdot f_T \cdot f_C}{f_W} \cdot \frac{C}{P}\right)^3 \cdot 50 \quad \cdots\cdots (6)$$

rollers are used as the rolling element

$$L = \left(\frac{f_H \cdot f_T \cdot f_C}{f_W} \cdot \frac{C}{P}\right)^{10/3} \cdot 50 \quad \cdots\cdots (7)$$

torque loading is present

$$L = \left(\frac{f_H \cdot f_T \cdot f_C}{f_W} \cdot \frac{C_T}{T}\right)^3 \cdot 50 \quad \cdots\cdots (8)$$

L: rated life (km) f_H: hardness coefficient
f_T: temperature coefficient f_C: contact coefficient
f_W: applied load coefficient P: applied load (N)
C: basic dynamic load rating (N)
C_T: basic dynamic torque rating (N・m)
T: applied torque (N・m)

www.bergab.ru Берг АБ bergab@ya.ru Тел. (495)-228-06-21, факс (495) 223-3071

www.bergab.ru Берг АБ bergab@ya.ru Тел. (495)-228-06-21, факс (495) 223-3071

When the travel distance per unit time is constant, the rated life can be expressed in terms of time (hour). Equation (9) shows the relationship between stroke length, number of cycles per minute, and the life time.

$$L_h = \frac{L \cdot 10^3}{2 \cdot \ell_s \cdot n_1 \cdot 60} \quad \cdots\cdots (9)$$

L_h: life time (hr) ℓ_s: stroke length (m)
n_1: number of cycles per minute (cpm)

・Hardness Coefficient (f_H)

In the linear system, the guide rail or shaft works as race way of the rolling elements. Therefore, the hardness of the rail or shaft is an important factor in determining the rated load. The rated load decreases as the hardness decrease below 58HRC. NB products hold appropriate hardness by advanced heat treatment technology. In case of using the rail or shaft of insufficient hardness, please take the hardness coefficient (Figure 1-2) into the life calculation equation.

Figure 1-2 Hardness Coefficient

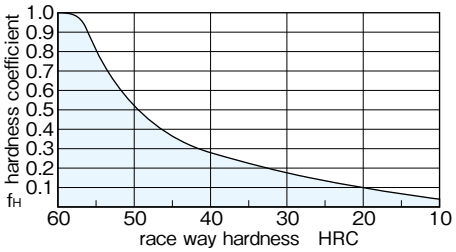

・Temperature Coefficient (f_T)

In order to give low wear characteristics NB products are hardened by heat treatment. If the temperature of the linear system exceeds 100℃, the hardness is decreased by tempering effect, so as the rated load decreases. Figure 1-3 shows the temperature coefficient as hardness changes with temperature.

Figure 1-3 Temperature Coefficient

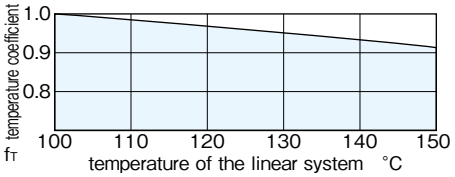

・Contact Coefficient (f_C)

When more than one bearing is used in close contact, the contact coefficient should be taken into consideration due to the variation of products and the accuracy of the mounting surface. Table 1-2 shows the contact coefficient for life calculation.

Table 1-2 Contact Coefficient

number of linear bearings in close contact on rail/shaft	contact coefficient f_C
1	1.00
2	0.81
3	0.72
4	0.66
5	0.61

・Applied Load Coefficient (f_W)

When calculating the applied load, the weight of the mass, inertial force, moment resulting from the motion, and the variation with time should be accurately estimated. However, it is very difficult to accurately estimate the applied load due to the existence of numerous variables, including the start/stop conditions of the reciprocating motion and of the shock/vibration. Estimation is simplified by using the values given in Table 1-3.

Table 1-3 Applied Load Coefficient

operating conditions		applied load coefficient
loading	velocity	f_W
no shock and vibration	15 m/min or less	1.0~1.5
low shock and vibration	60 m/min or less	1.5~2.0
high shock and vibration	60 m/min or more	2.0~3.5

Calculation of Applied Load (1)

Tables 1-4 and 1-5 show the formulas of applied load calculation for typical applications.

W: applied load (N) P_1 - P_4: load applied to linear system (N) X,Y: linear system span (mm)
x, y, ℓ: distance to applied load or to working center of gravity (mm) g: gravitational acceleration (9.8×10^3mm/s^2)
V: velocity (mm/s) t_1: acceleration time (sec) t_3: deceleration time (sec)

Table 1-4 Applied Load Calculation (1)

	condition	applied load calculation formula
under static conditions or constant velocity motion	2 horizontal axes 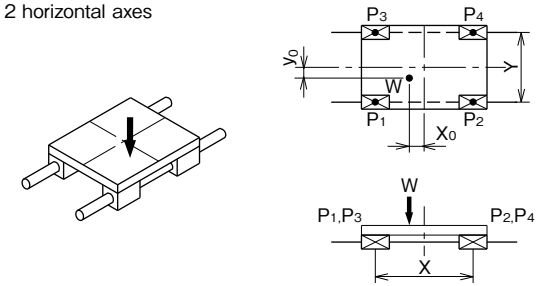	$P_1=\frac{1}{4}W+\frac{x_o}{2X}W+\frac{y_o}{2Y}W$ $P_2=\frac{1}{4}W-\frac{x_o}{2X}W+\frac{y_o}{2Y}W$ $P_3=\frac{1}{4}W+\frac{x_o}{2X}W-\frac{y_o}{2Y}W$ $P_4=\frac{1}{4}W-\frac{x_o}{2X}W-\frac{y_o}{2Y}W$ Note : If the calculation results in a negative value, the loading direction is in the opposite direction.
	2 horizontal axes, over-hang 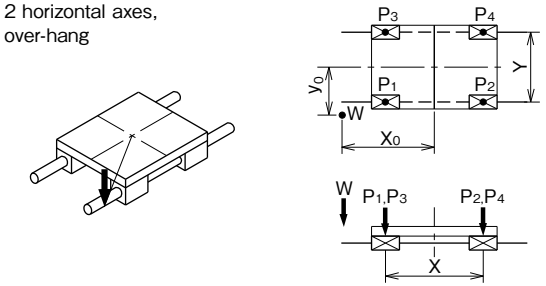	
	2 horizontal axes, moving axes 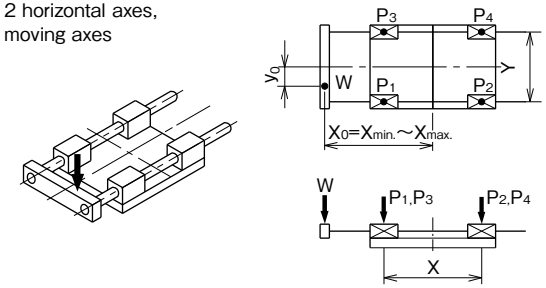	

www.bergab.ru Берг АБ bergab@ya.ru Тел. (495)-228-06-21, факс (495) 223-3071

www.bergab.ru Берг АБ bergab@ya.ru Тел. (495)-228-06-21, факс (495) 223-3071

Table 1-5 Applied Load Calculation (2)

	condition	applied load calculation formula
under static conditions or constant velocity motion	2 horizontal, side axes 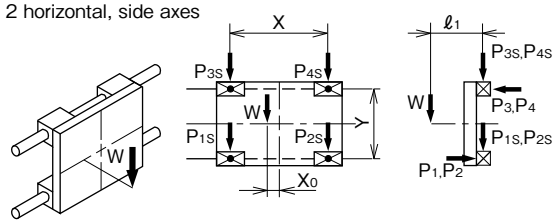	$P_1=P_2=P_3=P_4=\frac{\ell_1}{2Y}W$ $P_{1S}=P_{3S}=\frac{1}{4}W+\frac{X_0}{2X}W$ $P_{2S}=P_{4S}=\frac{1}{4}W-\frac{X_0}{2X}W$
	2 vertical axes 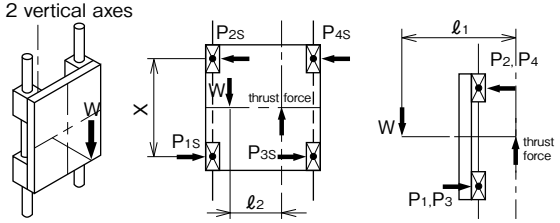	$P_1=P_2=P_3=P_4=\frac{\ell_1}{2X}W$ $P_{1S}=P_{2S}=P_{3S}=P_{4S}=\frac{\ell_2}{2X}W$
under constant acceleration conditions	2 horizontal axes 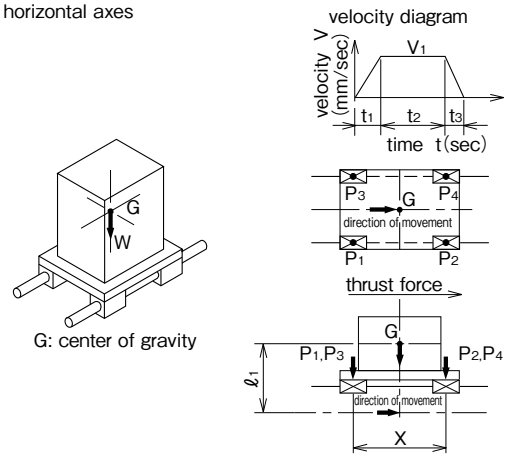	under acceleration $P_1=P_3=\frac{1}{4}W\left(1+\frac{2V_1\ell_1}{gt_1X}\right)$ $P_2=P_4=\frac{1}{4}W\left(1-\frac{2V_1\ell_1}{gt_1X}\right)$ under deceleration $P_1=P_3=\frac{1}{4}W\left(1-\frac{2V_1\ell_1}{gt_3X}\right)$ $P_2=P_4=\frac{1}{4}W\left(1+\frac{2V_1\ell_1}{gt_3X}\right)$ under constant velocity $P_1=P_2=P_3=P_4=\frac{1}{4}W$ ※g: acceleration of gravity (9.8×10^3mm/sec^2)

・Equivalent Coefficient

The linear systems are generally used with two axes, each axis with a couple of bearings installed. However, due to a space limitation, there must be an application in which one axis with one or two bearings in close contact installed. In such a case, multiply the applied moment by the equivalent moment coefficient shown in Tables 1-7~1-25 for applied load calculation. The following is a formula for calculating the equivalent moment load when a moment is applied to the linear system.

$$P=E\cdot M$$

P: equivalent moment load per bearing (N)
E: equivalent moment coefficient
M: applied moment (N・mm)

Calculation of Applied Load (2)

Table 1-6 shows the formulas for determining the applied load when moment is applied to the linear system.

W: applied load (N) P: load applied to the linear system (N) ℓ: distance to applied load or to working center of gravity (mm)

Table 1-6 Applied Load Calculation (3)

	condition	applied load calculation formula
1 axis application	1 horizontal axis, 1 bearing 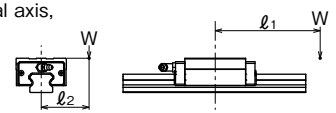	$P=W+Ep_1W\ell_1+ErW\ell_2$ Ep_1: Mp equivalent coefficient with 1 bearing used Er: Mr equivalent coefficient
	1 sideway axis, 1 bearing 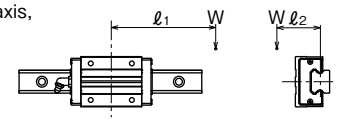	$P=W+Ey_1W\ell_1+ErW\ell_2$ Ey_1: My equivalent coefficient with 1 bearing used Er: Mr equivalent coefficient
	1 vertical axis, 1 bearing 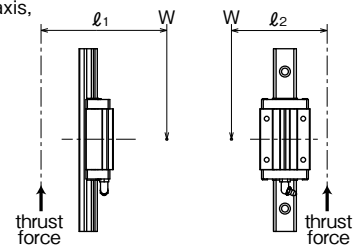	$P=Ep_1W\ell_1+EyW\ell_2$ Ep_1: Mp equivalent coefficient with 1 bearing used Ey_1: My equivalent coefficient with 1 bearing used
2 axes application	2 horizontal axes, 1 bearing each 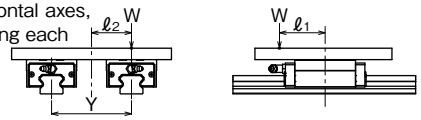	$P=W/2+W\ell_2/Y+Ep_1W\ell_1/2$ Ep_1: Mp equivalent coefficient with 1 bearing used Y: span between the two axes centers
	2 sideway axes, 1 bearing each 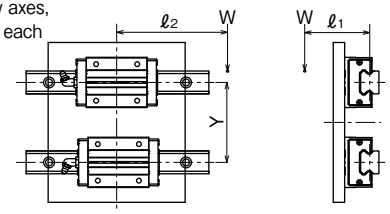	$P=W/2+Ey_1W\ell_2/2+W\ell_1/Y$ Ey_1: My equivalent coefficient with 1 bearing used Y: span between the two axes centers
	2 vertical axes, 1 bearing each 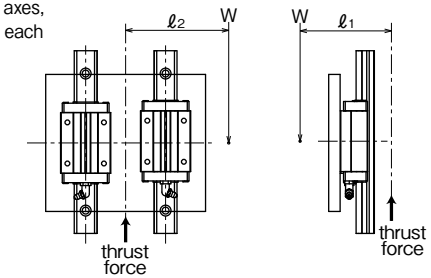	$P=Ep_1W\ell_1/2+Ey_1W\ell_2/2$ Ep_1: Mp equivalent coefficient with 1 bearing used Ey_1: My equivalent coefficient with 1 bearing used

www.bergab.ru Берг АБ bergab@ya.ru Тел. (495)-228-06-21, факс (495) 223-3071

www.bergab.ru Берг АБ bergab@ya.ru Тел. (495)-228-06-21, факс (495) 223-3071

Table 1-7 Slide Guide SEB type

part number	equivalent coefficient				
	E_{p1}	E_{p2}	E_{y1}	E_{y2}	Er
SEBS 5B	6.64×10^{-1}	9.61×10^{-2}	7.91×10^{-1}	1.15×10^{-1}	3.85×10^{-1}
SEBS 5BY	5.17×10^{-1}	8.38×10^{-2}	6.16×10^{-1}	9.99×10^{-2}	3.85×10^{-1}
SEBS 7B	4.62×10^{-1}	6.65×10^{-2}	5.50×10^{-1}	7.93×10^{-2}	2.74×10^{-1}
SEBS 7BY	2.84×10^{-1}	5.00×10^{-2}	3.38×10^{-1}	5.96×10^{-2}	2.74×10^{-1}
SEBS 9B	3.26×10^{-1}	5.26×10^{-2}	3.88×10^{-1}	6.27×10^{-2}	2.15×10^{-1}
SEBS 9BY	2.26×10^{-1}	4.14×10^{-2}	2.69×10^{-1}	4.94×10^{-2}	2.15×10^{-1}
SEBS12B	3.08×10^{-1}	4.71×10^{-2}	3.67×10^{-1}	5.61×10^{-2}	1.60×10^{-1}
SEBS12BY	2.02×10^{-1}	3.64×10^{-2}	2.41×10^{-1}	4.33×10^{-2}	1.60×10^{-1}
SEBS15B	2.31×10^{-1}	3.85×10^{-2}	2.75×10^{-1}	4.58×10^{-2}	1.29×10^{-1}
SEBS15BY	1.52×10^{-1}	2.90×10^{-2}	1.81×10^{-1}	3.45×10^{-2}	1.29×10^{-1}
SEBS20B	1.41×10^{-1}	2.47×10^{-2}	1.68×10^{-1}	2.94×10^{-2}	9.76×10^{-2}
SEBS20BY	1.01×10^{-1}	1.95×10^{-2}	1.20×10^{-1}	2.32×10^{-2}	9.76×10^{-2}
SEBS 5WB	4.51×10^{-1}	7.70×10^{-2}	5.37×10^{-1}	9.17×10^{-2}	1.96×10^{-1}
SEBS 5WBY	3.25×10^{-1}	6.15×10^{-2}	3.88×10^{-1}	7.33×10^{-2}	1.96×10^{-1}
SEBS 7WB	3.26×10^{-1}	5.26×10^{-2}	3.88×10^{-1}	6.27×10^{-2}	1.40×10^{-1}
SEBS 7WBY	2.26×10^{-1}	4.14×10^{-2}	2.69×10^{-1}	4.94×10^{-2}	1.40×10^{-1}
SEBS 9WB	2.41×10^{-1}	4.23×10^{-2}	2.87×10^{-1}	5.04×10^{-2}	1.08×10^{-1}
SEBS 9WBY	1.71×10^{-1}	3.31×10^{-2}	2.03×10^{-1}	3.94×10^{-2}	1.08×10^{-1}
SEBS12WB	2.17×10^{-1}	3.81×10^{-2}	2.59×10^{-1}	4.55×10^{-2}	8.16×10^{-2}
SEBS12WBY	1.51×10^{-1}	2.94×10^{-2}	1.79×10^{-1}	3.50×10^{-2}	8.16×10^{-2}
SEBS15WB	1.63×10^{-1}	3.03×10^{-2}	1.94×10^{-1}	3.61×10^{-2}	4.71×10^{-2}
SEBS15WBY	1.13×10^{-1}	2.29×10^{-2}	1.35×10^{-1}	2.73×10^{-2}	4.71×10^{-2}
SEBS 2A	7.06×10^{-1}	1.37×10^{-1}	5.92×10^{-1}	1.15×10^{-1}	9.09×10^{-1}
SEBS 3A	9.16×10^{-1}	1.49×10^{-1}	7.69×10^{-1}	1.25×10^{-1}	6.25×10^{-1}
SEBS 3AY	6.02×10^{-1}	1.13×10^{-1}	5.05×10^{-1}	9.48×10^{-2}	6.25×10^{-1}
SEBS 5A	6.11×10^{-1}	1.01×10^{-1}	5.13×10^{-1}	8.46×10^{-2}	3.85×10^{-1}
SEBS 5AY	4.65×10^{-1}	8.45×10^{-2}	3.90×10^{-1}	7.09×10^{-2}	3.85×10^{-1}
SEBS 7A	4.62×10^{-1}	7.48×10^{-2}	3.87×10^{-1}	6.27×10^{-2}	2.74×10^{-1}
SEBS 7AY	2.84×10^{-1}	5.49×10^{-2}	2.38×10^{-1}	4.61×10^{-2}	2.74×10^{-1}
SEB(S)9A	3.32×10^{-1}	5.89×10^{-2}	2.78×10^{-1}	4.94×10^{-2}	2.20×10^{-1}
SEB(S)9AY	2.25×10^{-1}	4.46×10^{-2}	1.89×10^{-1}	3.74×10^{-2}	2.20×10^{-1}
SEB(S)12A	3.08×10^{-1}	5.62×10^{-2}	2.58×10^{-1}	4.72×10^{-2}	1.60×10^{-1}
SEB(S)12AY	2.02×10^{-1}	4.11×10^{-2}	1.70×10^{-1}	3.45×10^{-2}	1.60×10^{-1}
SEB(S)15A	2.31×10^{-1}	4.30×10^{-2}	1.94×10^{-1}	3.61×10^{-2}	1.29×10^{-1}
SEB(S)15AY	1.52×10^{-1}	3.12×10^{-2}	1.27×10^{-1}	2.62×10^{-2}	1.29×10^{-1}
SEB(S)20A	1.53×10^{-1}	3.03×10^{-2}	1.28×10^{-1}	2.54×10^{-2}	9.76×10^{-2}
SEB(S)20AY	1.01×10^{-1}	2.16×10^{-2}	8.44×10^{-2}	1.81×10^{-2}	9.76×10^{-2}

E_{p1}: Mp equivalent coefficient with 1 block used E_{p2}: Mp equivalent coefficient with 2 blocks used
E_{y1}: My equivalent coefficient with 1 block used E_{y2}: My equivalent coefficient with 2 blocks used
Er: Mr equivalent coefficient

Table 1-8 Slide Guide SEB and SER type

part number	equivalent coefficient				
	E_{p1}	E_{p2}	E_{y1}	E_{y2}	Er
SEBS 3WA	6.74×10^{-1}	1.14×10^{-1}	5.42×10^{-1}	9.58×10^{-2}	3.23×10^{-1}
SEBS 3WAY	4.48×10^{-1}	8.78×10^{-2}	3.76×10^{-1}	7.37×10^{-2}	3.23×10^{-1}
SEBS 7WA(D)	3.26×10^{-1}	5.56×10^{-2}	2.73×10^{-1}	4.67×10^{-2}	1.40×10^{-1}
SEBS 7WAY	2.26×10^{-1}	4.32×10^{-2}	1.90×10^{-1}	3.63×10^{-2}	1.40×10^{-1}
SEB(S)9WA(D)	2.41×10^{-1}	4.72×10^{-2}	2.02×10^{-1}	3.96×10^{-2}	1.08×10^{-1}
SEB(S)9WAY	1.71×10^{-1}	3.58×10^{-2}	1.43×10^{-1}	3.00×10^{-2}	1.08×10^{-1}
SEB(S)12WA	2.02×10^{-1}	4.13×10^{-2}	1.70×10^{-1}	3.46×10^{-2}	8.16×10^{-2}
SEB(S)12WAY	1.43×10^{-1}	3.10×10^{-2}	1.20×10^{-1}	2.60×10^{-2}	8.16×10^{-2}
SEB(S)15WA	1.63×10^{-1}	3.29×10^{-2}	1.37×10^{-1}	2.76×10^{-2}	4.71×10^{-2}
SEB(S)15WAY	1.13×10^{-1}	2.43×10^{-2}	9.48×10^{-2}	2.04×10^{-2}	4.71×10^{-2}
SER(S)9A	2.49×10^{-1}	4.15×10^{-2}	2.15×10^{-1}	3.58×10^{-2}	1.50×10^{-1}
SER(S)12A	2.50×10^{-1}	4.16×10^{-2}	2.23×10^{-1}	3.71×10^{-2}	1.33×10^{-1}
SER(S)15A	1.99×10^{-1}	3.32×10^{-2}	1.79×10^{-1}	2.98×10^{-2}	1.05×10^{-1}
SER(S)20A	1.66×10^{-1}	2.77×10^{-2}	1.47×10^{-1}	2.45×10^{-2}	6.49×10^{-2}
SER(S)9WA	1.52×10^{-1}	2.53×10^{-2}	1.36×10^{-1}	2.26×10^{-2}	7.17×10^{-2}
SER(S)12WA	1.42×10^{-1}	2.36×10^{-2}	1.28×10^{-1}	2.13×10^{-2}	5.86×10^{-2}
SER(S)15WA	1.60×10^{-1}	2.66×10^{-2}	1.45×10^{-1}	2.41×10^{-2}	4.15×10^{-2}

E_{p1}: Mp equivalent coefficient with 1 block used E_{p2}: Mp equivalent coefficient with 2 blocks used
E_{y1}: My equivalent coefficient with 1 block used E_{y2}: My equivalent coefficient with 2 blocks used
Er: Mr equivalent coefficient

www.bergab.ru Берг АБ bergab@ya.ru Тел. (495)-228-06-21, факс (495) 223-3071

www.bergab.ru Берг АБ bergab@ya.ru Тел. (495)-228-06-21, факс (495) 223-3071

Table 1-9 Slide Guide SGL, GL, and SGW type

part number	equivalent coefficient				
	E_{p1}	E_{p2}	E_{y1}	E_{y2}	E_r
SGL15F (E)	2.57×10^{-1}	3.75×10^{-2}	2.57×10^{-1}	3.75×10^{-2}	1.28×10^{-1}
SGL20F (E)	2.06×10^{-1}	3.31×10^{-2}	2.06×10^{-1}	3.31×10^{-2}	9.29×10^{-2}
SGL25F (E)	1.72×10^{-1}	2.82×10^{-2}	1.72×10^{-1}	2.82×10^{-2}	8.31×10^{-2}
SGL30F (E)	1.47×10^{-1}	2.27×10^{-2}	1.47×10^{-1}	2.27×10^{-2}	6.88×10^{-2}
SGL35F (E)	1.29×10^{-1}	2.02×10^{-2}	1.29×10^{-1}	2.02×10^{-2}	5.46×10^{-2}
SGL15TF (TE,HTF,HTE)	1.63×10^{-1}	2.87×10^{-2}	1.63×10^{-1}	2.87×10^{-2}	1.28×10^{-1}
SGL20TF (TE)	1.41×10^{-1}	2.59×10^{-2}	1.41×10^{-1}	2.59×10^{-2}	9.29×10^{-2}
SGL25TF (TE,HTF,HTE)	1.09×10^{-1}	2.08×10^{-2}	1.09×10^{-1}	2.08×10^{-2}	8.31×10^{-2}
SGL30TF (TE,HTF,HTE)	9.31×10^{-2}	1.71×10^{-2}	9.31×10^{-2}	1.71×10^{-2}	6.88×10^{-2}
SGL35TF (TE,HTF,HTE)	8.15×10^{-2}	1.51×10^{-2}	8.15×10^{-2}	1.51×10^{-2}	5.46×10^{-2}
SGL20HTF (HTE)	1.21×10^{-1}	2.33×10^{-2}	1.21×10^{-1}	2.33×10^{-2}	9.29×10^{-2}
SGL45HTF (HTE)	6.52×10^{-2}	1.23×10^{-2}	6.52×10^{-2}	1.23×10^{-2}	4.38×10^{-2}
SGL15HYF (HYE)	1.07×10^{-1}	2.12×10^{-2}	1.07×10^{-1}	2.12×10^{-2}	1.28×10^{-1}
SGL20HYF (HYE)	8.59×10^{-2}	1.78×10^{-2}	8.59×10^{-2}	1.78×10^{-2}	4.29×10^{-2}
SGL25HYF (HYE)	7.53×10^{-2}	1.56×10^{-2}	7.53×10^{-2}	1.56×10^{-2}	8.31×10^{-2}
SGL30HYF (HYE)	6.45×10^{-2}	1.30×10^{-2}	6.45×10^{-2}	1.30×10^{-2}	6.88×10^{-2}
SGL35HYF (HYE)	5.65×10^{-2}	1.15×10^{-2}	5.65×10^{-2}	1.15×10^{-2}	5.46×10^{-2}
SGL45HYF (HYE)	5.03×10^{-2}	1.01×10^{-2}	5.03×10^{-2}	1.01×10^{-2}	4.38×10^{-2}
GL15F (E)	2.57×10^{-1}	3.75×10^{-2}	2.57×10^{-1}	3.75×10^{-2}	1.28×10^{-1}
GL20F (E)	2.06×10^{-1}	3.31×10^{-2}	2.06×10^{-1}	3.31×10^{-2}	9.29×10^{-2}
GL25F (E)	1.72×10^{-1}	2.82×10^{-2}	1.72×10^{-1}	2.82×10^{-2}	8.31×10^{-2}
GL30F (E)	1.47×10^{-1}	2.27×10^{-2}	1.47×10^{-1}	2.27×10^{-2}	6.88×10^{-2}
GL35F (E)	1.29×10^{-1}	2.02×10^{-2}	1.29×10^{-1}	2.02×10^{-2}	5.46×10^{-2}
GL15TF (TE,HTF,HTE)	1.63×10^{-1}	2.87×10^{-2}	1.63×10^{-1}	2.87×10^{-2}	1.28×10^{-1}
GL20TF (TE)	1.41×10^{-1}	2.59×10^{-2}	1.41×10^{-1}	2.59×10^{-2}	9.29×10^{-2}
GL25TF (TE,HTF,HTE)	1.09×10^{-1}	2.08×10^{-2}	1.09×10^{-1}	2.08×10^{-2}	8.31×10^{-2}
GL30TF (TE,HTF,HTE)	9.31×10^{-2}	1.71×10^{-2}	9.31×10^{-2}	1.71×10^{-2}	6.88×10^{-2}
GL35TF (TE,HTF,HTE)	8.15×10^{-2}	1.51×10^{-2}	8.15×10^{-2}	1.51×10^{-2}	5.46×10^{-2}
GL20HTF (HTE)	1.21×10^{-1}	2.33×10^{-2}	1.21×10^{-1}	2.33×10^{-2}	9.29×10^{-2}
GL45HTF (HTE)	6.52×10^{-2}	1.23×10^{-2}	6.52×10^{-2}	1.23×10^{-2}	4.38×10^{-2}
SGW17TF (TE)	2.00×10^{-1}	3.27×10^{-2}	2.00×10^{-1}	3.27×10^{-2}	5.34×10^{-2}
SGW21TF (TE)	1.68×10^{-1}	2.90×10^{-2}	1.68×10^{-1}	2.90×10^{-2}	4.80×10^{-2}
SGW27TF (TE)	1.26×10^{-1}	2.32×10^{-2}	1.26×10^{-1}	2.32×10^{-2}	4.35×10^{-2}
SGW35TF (TE)	8.39×10^{-2}	1.56×10^{-2}	8.39×10^{-2}	1.56×10^{-2}	2.62×10^{-2}

E_{p1}: Mp equivalent coefficient with 1 block used E_{p2}: Mp equivalent coefficient with 2 blocks used
E_{y1}: My equivalent coefficient with 1 block used E_{y2}: My equivalent coefficient with 2 blocks used
E_r: Mr equivalent coefficient

Table 1-10 Ball Spline・Rotary Ball Spline

part number		equivalent coefficient	
		E_1	E_2
SSP 4	–	6.19×10^{-1}	1.18×10^{-1}
SSP 6	SPR 6	4.47×10^{-1}	5.70×10^{-2}
SSP 8	SPR 8	3.88×10^{-1}	5.74×10^{-2}
SSP 10	SPR 10	2.82×10^{-1}	4.37×10^{-2}
SSP 13A	SPR 13	3.57×10^{-1}	4.49×10^{-2}
SSP 16A	SPR 16	2.43×10^{-1}	3.75×10^{-2}
SSP 20A	SPR 20A	1.48×10^{-1}	2.91×10^{-2}
SSP 25A	SPR 25A	1.37×10^{-1}	2.27×10^{-2}
SSP 30A	SPR 30A	1.28×10^{-1}	1.58×10^{-2}
SSP 40A	SPR 40A	1.05×10^{-1}	1.28×10^{-2}
SSP 50A	SPR 50A	9.41×10^{-2}	1.59×10^{-2}
SSP 60A	SPR 60A	9.02×10^{-2}	1.45×10^{-2}
SSP 80	–	6.70×10^{-2}	1.21×10^{-2}
SSP 80L	–	4.56×10^{-2}	9.53×10^{-3}
SSP100	–	5.92×10^{-2}	1.03×10^{-2}
SSP100L	–	4.06×10^{-2}	7.90×10^{-3}
SSP 20	SPR 20	1.79×10^{-1}	2.26×10^{-2}
SSP 25	SPR 25	1.55×10^{-1}	1.94×10^{-2}
SSP 30	SPR 30	1.28×10^{-1}	1.58×10^{-2}
SSP 40	SPR 40	1.05×10^{-1}	1.28×10^{-2}
SSP 50	SPR 50	1.07×10^{-1}	1.69×10^{-2}
SSP 60	SPR 60	9.77×10^{-2}	1.44×10^{-2}

E_1: equivalent coefficient with 1 nut used
E_2: equivalent coefficient with 2 nuts used

Table 1-11 Slide Bush SM type

part number	equivalent coefficient	
	E_1	E_2
SM 3	1.24	2.13×10^{-1}
SM 4	1.21	1.78×10^{-1}
SM 5	8.96×10^{-1}	1.40×10^{-1}
SM 6	7.29×10^{-1}	1.09×10^{-1}
SM 8s	7.19×10^{-1}	1.20×10^{-1}
SM 8	5.46×10^{-1}	8.42×10^{-2}
SM 10	4.55×10^{-1}	7.02×10^{-2}
SM 12	4.32×10^{-1}	6.64×10^{-2}
SM 13	4.06×10^{-1}	6.21×10^{-2}
SM 16	3.59×10^{-1}	5.46×10^{-2}
SM 20	3.07×10^{-1}	4.70×10^{-2}
SM 25	2.17×10^{-1}	3.33×10^{-2}
SM 30	1.99×10^{-1}	3.07×10^{-2}
SM 35	1.71×10^{-1}	2.70×10^{-2}
SM 40	1.64×10^{-1}	2.51×10^{-2}
SM 50	1.20×10^{-1}	1.89×10^{-2}
SM 60	1.13×10^{-1}	1.75×10^{-2}
SM 80	8.18×10^{-2}	1.36×10^{-2}
SM100	6.66×10^{-2}	1.11×10^{-2}
SM120	5.63×10^{-2}	9.38×10^{-3}
SM150	4.62×10^{-2}	7.71×10^{-3}

E_1: equivalent coefficient with 1 bush used
E_2: equivalent coefficient with 2 bushes used

Table 1-12 Slide Bush SM-G-L type

part number	equivalent coefficient	
	E_1	E_2
SM 6G-LUU	4.14×10^{-1}	7.39×10^{-2}
SM 8G-LUU	3.17×10^{-1}	5.90×10^{-2}
SM10G-LUU	2.53×10^{-1}	4.78×10^{-2}
SM12G-LUU	2.28×10^{-1}	4.47×10^{-2}
SM13G-LUU	2.03×10^{-1}	4.03×10^{-2}
SM16G-LUU	1.78×10^{-1}	3.45×10^{-2}
SM20G-LUU	1.53×10^{-1}	3.06×10^{-2}
SM25G-LUU	1.09×10^{-1}	2.17×10^{-2}
SM30G-LUU	9.59×10^{-2}	1.97×10^{-2}

E_1: equivalent coefficient with 1 bush used
E_2: equivalent coefficient with 2 bushes used

www.bergab.ru Берг АБ bergab@ya.ru Тел. (495)-228-06-21, факс (495) 223-3071

www.bergab.ru Берг АБ bergab@ya.ru Тел. (495)-228-06-21, факс (495) 223-3071

Table 1-13 Slide Bush SM-W type

part number	equivalent coefficient E_1	E_2
SM 3W	4.12×10^{-1}	–
SM 4W	4.03×10^{-1}	–
SM 5W	2.99×10^{-1}	–
SM 6W	2.43×10^{-1}	–
SM 8W	1.82×10^{-1}	–
SM 10W	1.52×10^{-1}	–
SM 12W	1.44×10^{-1}	–
SM 13W	1.35×10^{-1}	–
SM 16W	1.19×10^{-1}	–
SM 20W	1.02×10^{-1}	–
SM 25W	7.24×10^{-2}	–
SM 30W	6.63×10^{-2}	–
SM 35W	5.70×10^{-2}	–
SM 40W	5.47×10^{-2}	–
SM 50W	4.01×10^{-2}	–
SM 60W	3.77×10^{-2}	–

E_1: equivalent coefficient with 1 bush used
E_2: equivalent coefficient with 2 bushes used

Table 1-14 Slide Bush TRF type

part number	equivalent coefficient E_1	E_2
TRF 6	6.46×10^{-2}	–
TRF 8	4.90×10^{-2}	–
TRF10	4.07×10^{-2}	–
TRF12	3.92×10^{-2}	–
TRF13	3.66×10^{-2}	–
TRF16	3.20×10^{-2}	–
TRF20	2.80×10^{-2}	–
TRF25	2.00×10^{-2}	–
TRF30	1.85×10^{-2}	–
TRF35	1.68×10^{-2}	–
TRF40	1.45×10^{-2}	–
TRF50	1.16×10^{-2}	–
TRF60	1.11×10^{-2}	–

E_1: equivalent coefficient with 1 bush used
E_2: equivalent coefficient with 2 bushes used

Table 1-15 Slide Bush KB type

part number	equivalent coefficient E_1	E_2
KB 3	1.28	2.13×10^{-1}
KB 4	1.05	1.75×10^{-1}
KB 5	5.40×10^{-1}	9.00×10^{-2}
KB 8	5.61×10^{-1}	8.00×10^{-2}
KB10	4.21×10^{-1}	7.02×10^{-2}
KB12	4.02×10^{-1}	6.20×10^{-2}
KB16	3.77×10^{-1}	5.73×10^{-2}
KB20	3.29×10^{-1}	4.49×10^{-2}
KB25	2.14×10^{-1}	3.37×10^{-2}
KB30	2.08×10^{-1}	2.96×10^{-2}
KB40	1.64×10^{-1}	2.51×10^{-2}
KB50	1.20×10^{-1}	1.89×10^{-2}
KB60	1.21×10^{-1}	1.55×10^{-2}
KB80	7.34×10^{-2}	1.22×10^{-2}
KB 8W	1.87×10^{-1}	–
KB12W	1.34×10^{-1}	–
KB16W	1.25×10^{-1}	–
KB20W	1.10×10^{-1}	–
KB25W	7.14×10^{-2}	–
KB30W	6.96×10^{-2}	–
KB40W	5.47×10^{-2}	–
KB50W	4.02×10^{-2}	–
KB60W	4.11×10^{-2}	–

E_1: equivalent coefficient with 1 bush used
E_2: equivalent coefficient with 2 bushes used

Table 1-16 TOPBALL TK type

part number	equivalent coefficient E_1	E_2
TK 8	4.83×10^{-1}	8.04×10^{-2}
TK10	4.14×10^{-1}	6.90×10^{-2}
TK12	3.65×10^{-1}	6.09×10^{-2}
TK16	3.25×10^{-1}	5.42×10^{-2}
TK20	2.53×10^{-1}	4.21×10^{-2}
TK25	1.88×10^{-1}	3.13×10^{-2}
TK30	1.65×10^{-1}	2.74×10^{-2}
TK40	1.41×10^{-1}	2.34×10^{-2}
TK50	1.09×10^{-1}	1.82×10^{-2}

E_1: equivalent coefficient with 1 bush used
E_2: equivalent coefficient with 2 bushes used

Table 1-17 TOPBALL TW type

part number	equivalent coefficient E_1	E_2
TW 3	8.70×10^{-1}	1.45×10^{-1}
TW 4	6.57×10^{-1}	1.09×10^{-1}
TW 6	5.17×10^{-1}	8.60×10^{-2}
TW 8	3.55×10^{-1}	5.90×10^{-2}
TW10	3.00×10^{-1}	5.00×10^{-2}
TW12	2.66×10^{-1}	4.40×10^{-2}
TW16	1.90×10^{-1}	3.10×10^{-2}
TW20	1.66×10^{-1}	2.70×10^{-2}
TW24	1.44×10^{-1}	2.40×10^{-2}
TW32	1.08×10^{-1}	1.80×10^{-2}

E_1: equivalent coefficient with 1 bush used
E_2: equivalent coefficient with 2 bushes used

Table 1-18 Slide Bush SW type

part number	equivalent coefficient E_1	E_2
SWS 2	8.90×10^{-1}	1.48×10^{-1}
SWS 3	8.01×10^{-1}	1.33×10^{-1}
SW 4	7.95×10^{-1}	1.05×10^{-1}
SW 6	6.98×10^{-1}	9.75×10^{-2}
SW 8	4.09×10^{-1}	6.23×10^{-2}
SW10	3.54×10^{-1}	5.33×10^{-2}
SW12	3.10×10^{-1}	4.76×10^{-2}
SW16	2.29×10^{-1}	3.40×10^{-2}
SW20	1.94×10^{-1}	3.01×10^{-2}
SW24	1.69×10^{-1}	2.59×10^{-2}
SW32	1.19×10^{-1}	1.87×10^{-2}
SW40	9.23×10^{-2}	1.54×10^{-2}
SW48	7.84×10^{-2}	1.31×10^{-2}
SW64	5.47×10^{-2}	9.11×10^{-3}
SW 4W	2.65×10^{-1}	–
SW 6W	2.33×10^{-1}	–
SW 8W	1.37×10^{-1}	–
SW10W	1.18×10^{-1}	–
SW12W	1.03×10^{-1}	–
SW16W	7.62×10^{-2}	–
SW20W	6.47×10^{-2}	–
SW24W	5.62×10^{-2}	–
SW32W	3.98×10^{-2}	–

E_1: equivalent coefficient with 1 bush used
E_2: equivalent coefficient with 2 bushes used

Table 1-19 Slide Bush GM type

part number	equivalent coefficient E_1	E_2
GM 6	6.43×10^{-1}	1.07×10^{-1}
GM 8	4.92×10^{-1}	8.20×10^{-2}
GM10	4.21×10^{-1}	7.01×10^{-2}
GM12	3.85×10^{-1}	6.41×10^{-2}
GM13	3.77×10^{-1}	6.29×10^{-2}
GM16	3.25×10^{-1}	5.42×10^{-2}
GM20	2.74×10^{-1}	4.57×10^{-2}
GM25	1.98×10^{-1}	3.30×10^{-2}
GM30	1.81×10^{-1}	3.02×10^{-2}
GM 6W	3.53×10^{-1}	–
GM 8W	2.38×10^{-1}	–
GM10W	2.20×10^{-1}	–
GM12W	2.07×10^{-1}	–
GM13W	1.94×10^{-1}	–
GM16W	1.70×10^{-1}	–
GM20W	1.37×10^{-1}	–
GM25W	9.02×10^{-2}	–
GM30W	9.55×10^{-2}	–

E_1: equivalent coefficient with 1 bush used
E_2: equivalent coefficient with 2 bushes used

Table 1-20 Slide Rotary Bush

part number	equivalent coefficient E_1	E_2
SRE 6	6.83×10^{-1}	1.14×10^{-1}
SRE 8	4.98×10^{-1}	8.31×10^{-2}
SRE10	4.12×10^{-1}	6.86×10^{-2}
SRE12	4.19×10^{-1}	6.98×10^{-2}
SRE13	3.93×10^{-1}	6.54×10^{-2}
SRE16	3.40×10^{-1}	5.66×10^{-2}
SRE20	2.90×10^{-1}	4.84×10^{-2}
SRE25	1.98×10^{-1}	3.29×10^{-2}
SRE30	1.80×10^{-1}	3.01×10^{-2}
SRE40	1.52×10^{-1}	2.54×10^{-2}
RK12	4.32×10^{-1}	6.64×10^{-2}
RK16	3.59×10^{-1}	5.46×10^{-2}
RK20	3.07×10^{-1}	4.70×10^{-2}
RK25	2.17×10^{-1}	3.33×10^{-2}
RK30	1.99×10^{-1}	3.07×10^{-2}

E_1: equivalent coefficient with 1 bush used
E_2: equivalent coefficient with 2 bushes used

www.bergab.ru Берг АБ bergab@ya.ru Тел. (495)-228-06-21, факс (495) 223-3071

www.bergab.ru Берг АБ bergab@ya.ru Тел. (495)-228-06-21, факс (495) 223-3071

Table 1-21 Slide Table NVT type

part number	equivalent coefficient		
	Ep	Ey	Er
NVT2035	1.50×10^{-1}	1.73×10^{-1}	1.11×10^{-1}
NVT2050	1.61×10^{-1}	1.63×10^{-1}	1.45×10^{-1}
NVT2065	1.24×10^{-1}	1.28×10^{-1}	1.31×10^{-1}
NVT2080	1.15×10^{-1}	1.13×10^{-1}	1.53×10^{-1}
NVT2095	9.51×10^{-2}	9.56×10^{-2}	1.43×10^{-1}
NVT2110	8.80×10^{-2}	8.62×10^{-2}	1.57×10^{-1}
NVT2125	8.21×10^{-2}	7.87×10^{-2}	1.69×10^{-1}
NVT2140	7.12×10^{-2}	6.94×10^{-2}	1.58×10^{-1}
NVT2155	6.48×10^{-2}	6.25×10^{-2}	1.68×10^{-1}
NVT2170	6.10×10^{-2}	5.80×10^{-2}	1.75×10^{-1}
NVT2185	5.77×10^{-2}	5.42×10^{-2}	1.82×10^{-1}
NVT3055	6.06×10^{-1}	2.37×10^{-1}	3.80×10^{-1}
NVT3080	9.90×10^{-2}	1.03×10^{-1}	9.02×10^{-2}
NVT3105	9.04×10^{-2}	8.91×10^{-2}	1.09×10^{-1}
NVT3130	8.78×10^{-2}	7.79×10^{-2}	1.49×10^{-1}
NVT3155	5.74×10^{-2}	5.67×10^{-2}	1.03×10^{-1}
NVT3180	5.36×10^{-2}	5.18×10^{-2}	1.11×10^{-1}
NVT3205	5.05×10^{-2}	4.78×10^{-2}	1.20×10^{-1}
NVT3230	4.45×10^{-2}	4.28×10^{-2}	1.12×10^{-1}
NVT4085	1.04×10^{-1}	1.09×10^{-1}	6.28×10^{-2}
NVT4125	1.01×10^{-1}	8.98×10^{-2}	1.01×10^{-1}
NVT4165	6.24×10^{-2}	6.09×10^{-2}	7.39×10^{-2}
NVT4205	4.41×10^{-2}	4.41×10^{-2}	6.50×10^{-2}
NVT4245	4.15×10^{-2}	4.00×10^{-2}	7.79×10^{-2}
NVT4285	3.37×10^{-2}	3.30×10^{-2}	6.97×10^{-2}
NVT6110	1.74×10^{-1}	1.24×10^{-1}	1.09×10^{-1}
NVT6160	6.01×10^{-2}	6.08×10^{-2}	5.66×10^{-2}
NVT6210	4.81×10^{-2}	4.74×10^{-2}	6.63×10^{-2}
NVT6260	4.21×10^{-2}	4.06×10^{-2}	6.84×10^{-2}
NVT6310	2.95×10^{-2}	2.98×10^{-2}	5.28×10^{-2}
NVT6360	2.69×10^{-2}	2.69×10^{-2}	5.52×10^{-2}
NVT6410	2.52×10^{-2}	2.45×10^{-2}	6.37×10^{-2}
NVT9210	7.50×10^{-2}	6.04×10^{-2}	5.65×10^{-2}
NVT9310	3.26×10^{-2}	3.24×10^{-2}	4.00×10^{-2}
NVT9410	2.35×10^{-2}	2.34×10^{-2}	3.84×10^{-2}
NVT9510	1.82×10^{-2}	1.83×10^{-2}	3.34×10^{-2}

Ep: Mp equivalent coefficient Ey: My equivalent coefficient
Er: Mr equivalent coefficient

Table 1-22 Slide Table SVT type (1)

part number	equivalent coefficient		
	Ep	Ey	Er
SVT1025	2.67×10^{-1}	3.25×10^{-1}	1.48×10^{-1}
SVT1035	3.10×10^{-1}	2.73×10^{-1}	1.48×10^{-1}
SVT1045	1.71×10^{-1}	1.87×10^{-1}	1.48×10^{-1}
SVT1055	1.51×10^{-1}	1.63×10^{-1}	1.48×10^{-1}
SVT1065	1.35×10^{-1}	1.44×10^{-1}	1.48×10^{-1}
SVT1075	1.11×10^{-1}	1.17×10^{-1}	1.48×10^{-1}
SVT1085	1.02×10^{-1}	1.07×10^{-1}	1.48×10^{-1}
SVT2035	1.67×10^{-1}	2.03×10^{-1}	1.11×10^{-1}
SVT2050	1.45×10^{-1}	1.64×10^{-1}	1.11×10^{-1}
SVT2065	1.22×10^{-1}	1.37×10^{-1}	1.11×10^{-1}
SVT2080	1.28×10^{-1}	1.19×10^{-1}	1.11×10^{-1}
SVT2095	1.10×10^{-1}	1.03×10^{-1}	1.11×10^{-1}
SVT2110	7.61×10^{-2}	8.08×10^{-2}	1.11×10^{-1}
SVT2125	6.94×10^{-2}	7.33×10^{-2}	1.11×10^{-1}
SVT2140	7.01×10^{-2}	6.73×10^{-2}	1.11×10^{-1}
SVT2155	6.43×10^{-2}	6.19×10^{-2}	1.11×10^{-1}
SVT2170	5.12×10^{-2}	5.33×10^{-2}	1.11×10^{-1}
SVT2185	4.81×10^{-2}	4.99×10^{-2}	1.11×10^{-1}
SVT3055	2.00×10^{-1}	1.75×10^{-1}	7.14×10^{-2}
SVT3080	1.22×10^{-1}	1.12×10^{-1}	7.14×10^{-2}
SVT3105	7.53×10^{-2}	8.14×10^{-2}	7.14×10^{-2}
SVT3130	6.08×10^{-2}	6.47×10^{-2}	7.14×10^{-2}
SVT3155	6.17×10^{-2}	5.89×10^{-2}	7.14×10^{-2}
SVT3180	5.15×10^{-2}	4.96×10^{-2}	7.14×10^{-2}
SVT3205	4.75×10^{-2}	4.59×10^{-2}	7.14×10^{-2}
SVT3230	3.85×10^{-2}	3.99×10^{-2}	7.14×10^{-2}
SVT3255	3.87×10^{-2}	3.76×10^{-2}	7.14×10^{-2}
SVT3280	3.64×10^{-2}	3.54×10^{-2}	7.14×10^{-2}

Ep: Mp equivalent coefficient Ey: My equivalent coefficient
Er: Mr equivalent coefficient

Table 1-23 Slide Table SVT type (2)

part number	equivalent coefficient		
	Ep	Ey	Er
SVT3305	3.09×10^{-2}	3.18×10^{-2}	7.14×10^{-2}
SVT4085	8.29×10^{-2}	9.38×10^{-2}	5.00×10^{-2}
SVT4125	6.11×10^{-2}	6.67×10^{-2}	5.00×10^{-2}
SVT4165	6.27×10^{-2}	5.88×10^{-2}	5.00×10^{-2}
SVT4205	4.89×10^{-2}	4.65×10^{-2}	5.00×10^{-2}
SVT4245	4.01×10^{-2}	3.85×10^{-2}	5.00×10^{-2}
SVT4285	3.39×10^{-2}	3.28×10^{-2}	5.00×10^{-2}
SVT4325	2.94×10^{-2}	2.86×10^{-2}	5.00×10^{-2}
SVT4365	2.60×10^{-2}	2.53×10^{-2}	5.00×10^{-2}
SVT4405	2.20×10^{-2}	2.27×10^{-2}	5.00×10^{-2}
SVT6110	6.83×10^{-2}	7.72×10^{-2}	4.44×10^{-2}
SVT6160	5.03×10^{-2}	5.49×10^{-2}	4.44×10^{-2}
SVT6210	3.97×10^{-2}	4.24×10^{-2}	4.44×10^{-2}
SVT6260	3.27×10^{-2}	3.45×10^{-2}	4.44×10^{-2}
SVT6310	2.78×10^{-2}	2.90×10^{-2}	4.44×10^{-2}
SVT6360	2.79×10^{-2}	2.70×10^{-2}	4.44×10^{-2}
SVT6410	2.42×10^{-2}	2.35×10^{-2}	4.44×10^{-2}
SVT6460	2.14×10^{-2}	2.08×10^{-2}	4.44×10^{-2}
SVT6510	1.92×10^{-2}	1.87×10^{-2}	4.44×10^{-2}
SVT9210	3.50×10^{-2}	3.90×10^{-2}	2.78×10^{-2}
SVT9310	3.14×10^{-2}	2.94×10^{-2}	2.78×10^{-2}
SVT9410	2.41×10^{-2}	2.57×10^{-2}	2.78×10^{-2}
SVT9510	1.98×10^{-2}	2.09×10^{-2}	2.78×10^{-2}
SVT9610	2.00×10^{-2}	1.92×10^{-2}	2.78×10^{-2}
SVT9710	1.70×10^{-2}	1.64×10^{-2}	2.78×10^{-2}
SVT9810	1.37×10^{-2}	1.42×10^{-2}	2.78×10^{-2}
SVT9910	1.22×10^{-2}	1.26×10^{-2}	2.78×10^{-2}
SVT91010	1.10×10^{-2}	1.13×10^{-2}	2.78×10^{-2}

Ep: Mp equivalent coefficient Ey: My equivalent coefficient
Er: Mr equivalent coefficient

Table 1-24 Slide Table SYT type

part number	equivalent coefficient		
	Ep	Ey	Er
SYT1025	2.67×10^{-1}	3.25×10^{-1}	2.67×10^{-1}
SYT1035	3.10×10^{-1}	2.73×10^{-1}	2.67×10^{-1}
SYT1045	1.71×10^{-1}	1.87×10^{-1}	2.67×10^{-1}
SYT1055	1.51×10^{-1}	1.63×10^{-1}	2.67×10^{-1}
SYT1065	1.35×10^{-1}	1.44×10^{-1}	2.67×10^{-1}
SYT1075	1.11×10^{-1}	1.17×10^{-1}	2.67×10^{-1}
SYT1085	1.02×10^{-1}	1.07×10^{-1}	2.67×10^{-1}
SYT2035	1.67×10^{-1}	2.03×10^{-1}	1.54×10^{-1}
SYT2050	1.45×10^{-1}	1.64×10^{-1}	1.54×10^{-1}
SYT2065	1.22×10^{-1}	1.37×10^{-1}	1.54×10^{-1}
SYT2080	1.28×10^{-1}	1.19×10^{-1}	1.54×10^{-1}
SYT2095	1.10×10^{-1}	1.03×10^{-1}	1.54×10^{-1}
SYT2110	7.61×10^{-2}	8.08×10^{-2}	1.54×10^{-1}
SYT2125	6.94×10^{-2}	7.33×10^{-2}	1.54×10^{-1}
SYT3055	2.00×10^{-1}	1.75×10^{-1}	1.15×10^{-1}
SYT3080	1.22×10^{-1}	1.12×10^{-1}	1.15×10^{-1}
SYT3105	7.53×10^{-2}	8.14×10^{-2}	1.15×10^{-1}
SYT3130	6.08×10^{-2}	6.47×10^{-2}	1.15×10^{-1}
SYT3155	6.17×10^{-2}	5.89×10^{-2}	1.15×10^{-1}
SYT3180	5.15×10^{-2}	4.96×10^{-2}	1.15×10^{-1}
SYT3205	4.75×10^{-2}	4.59×10^{-2}	1.15×10^{-1}

Ep: Mp equivalent coefficient Ey: My equivalent coefficient
Er: Mr equivalent coefficient

Table 1-25 Miniature Slide SYBS type

part number	equivalent coefficient		
	Ep	Ey	Er
SYBS 6-13	8.35×10^{-1}	7.01×10^{-1}	8.51×10^{-1}
SYBS 6-21	5.45×10^{-1}	4.57×10^{-1}	8.51×10^{-1}
SYBS 8-11	8.82×10^{-1}	7.40×10^{-1}	5.88×10^{-1}
SYBS 8-21	4.81×10^{-1}	4.04×10^{-1}	5.88×10^{-1}
SYBS 8-31	3.57×10^{-1}	2.99×10^{-1}	5.88×10^{-1}
SYBS12-23	4.31×10^{-1}	3.62×10^{-1}	3.13×10^{-1}
SYBS12-31	3.57×10^{-1}	2.99×10^{-1}	3.13×10^{-1}
SYBS12-46	2.35×10^{-1}	1.97×10^{-1}	3.13×10^{-1}

Ep: Mp equivalent coefficient Ey: My equivalent coefficient
Er: Mr equivalent coefficient

www.bergab.ru Берг АБ bergab@ya.ru Тел. (495)-228-06-21, факс (495) 223-3071

www.bergab.ru Берг АБ bergab@ya.ru Тел. (495)-228-06-21, факс (495) 223-3071

●Average Applied Load

The load applied to a linear system generally varies with the travel distance depending on how the system is operated. This includes the start/stop processes of the reciprocating motion and work on the system. The average applied load is used to compute the life corresponding to the actual application conditions.

①When the load varies in a step manner with the travel distance (Figure 1-7).

ℓ_1 is the travel distance under load P_1
ℓ_2 is the travel distance under load P_2
⋮ ⋮
ℓ_n is the travel distance under load P_n

The average applied load Pm is obtained by the following equation.

$$P_m=\sqrt[3]{\frac{1}{\ell}(P_1^3\ell_1+P_2^3\ell_2\cdots+P_n^3\ell_n)} \cdots (10)$$

P_m: average applied load (N) ℓ: total travel distance (m)

②When the applied load varies linearly with the travel distance (Figure 1-8), the average applied load Pm is approximated by the following equation.

$$P_m \fallingdotseq \frac{1}{3}(P_{min}+2P_{max}) \cdots\cdots (11)$$

P_{min}: minimum applied load (N)
P_{max}: maximum applied load (N)

③When the applied load draws a sine-curve as shown by Figures 1-9 (a) and (b), the average applied load Pm is approximated by the following equations.

Figure1-9 (a) $P_m \fallingdotseq 0.65P_{max}$ ····· (12)
Figure1-9 (b) $P_m \fallingdotseq 0.75P_{max}$ ····· (13)

Figure 1-7 Applied Load Varies Stepwise

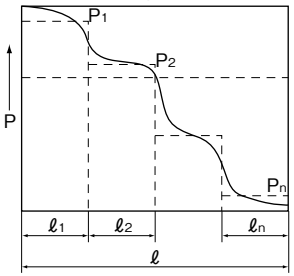

Figure 1-8 Applied Load Varies Linearly

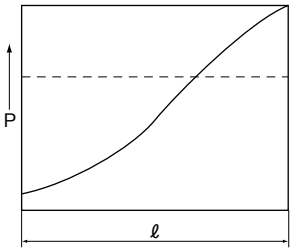

Figure 1-9 Applied Load Varies Sine-Curve

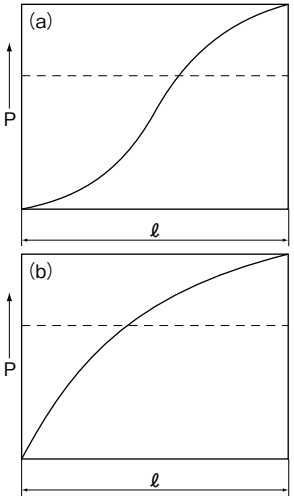

RATED LIFE CALCULATION EXAMPLE 1

2 Horizontal Axes, 2 Blocks each, Considering Acceleration/Deceleration

Operating Conditions

part number: SGL15F/E
basic dynamic load rating C=7.29kN
basic static load rating C_0=9.4kN
guide block span: L_{unit}=100mm
guide rail span: L_{rail}=100mm
drive: Y_d=10mm
Z_d=30mm
mass: m_1=30kg X_1=15mm
Y_1=−20mm
Z_1=20mm
m_2=15kg X_2=80mm
Y_2=50mm
Z_2=100mm
velocity: V_{max}=200mm/s
time: t_1=0.2s
t_2=3.3s
t_3=0.2s
acceleration: a_1=1.0m/s^2
a_3=1.0m/s^2
stroke: L_s=700mm
number of cycles per minute: n_1=8cpm

Figure 1-10

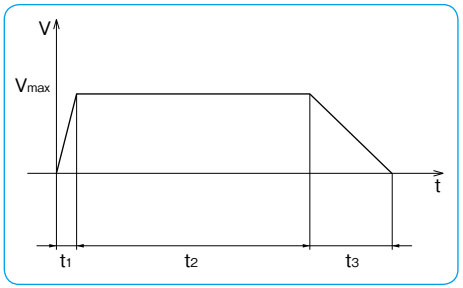

Figure 1-11

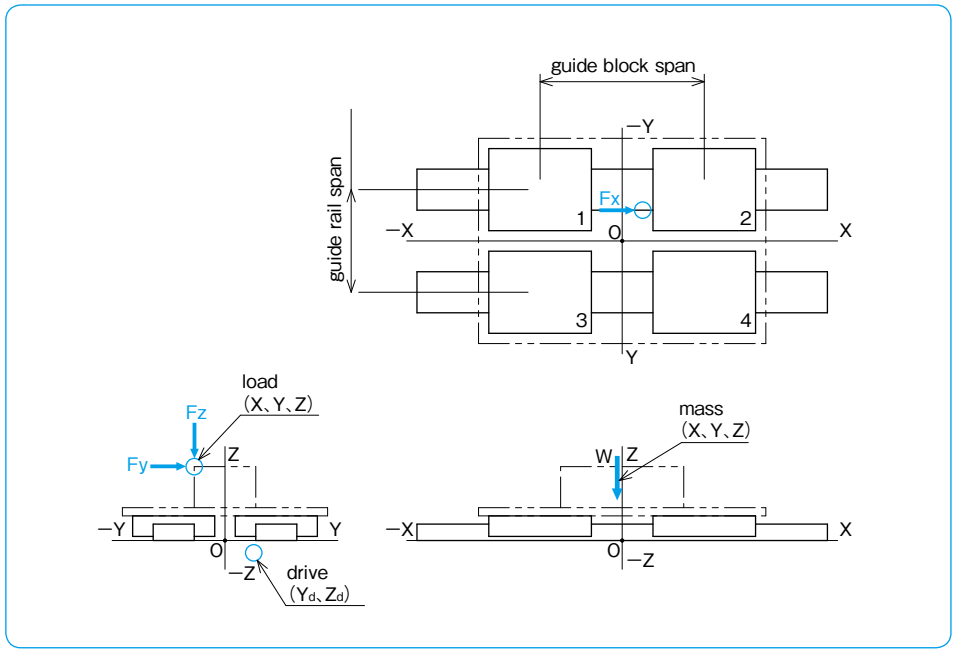

www.bergab.ru Берг АБ bergab@ya.ru Тел. (495)-228-06-21, факс (495) 223-3071

www.bergab.ru Берг АБ bergab@ya.ru Тел. (495)-228-06-21, факс (495) 223-3071

①Calculating Moment Applied to the Unit

〈acceleration〉

pitching $Ma_1 = m \cdot g \cdot Xm - m \cdot a_1 \cdot (Zm - Zd)$

$Ma_1 = 30 \times 9.8 \times (15) - 30 \times 1 \times \{(20) - (30)\} + 15 \times 9.8 \times (80) - 15 \times 1 \times \{(100) - (30)\} = 15431\text{N}\cdot\text{mm}$

yawing $Ma_2 = -m \cdot a_1 \cdot (Ym - Yd)$

$Ma_2 = -30 \times 1 \times \{(-20) - (10)\} - 15 \times 1 \times \{(50) - (10)\} = 300\text{N}\cdot\text{mm}$

rolling $Ma_3 = m \cdot g \cdot Ym$

$Ma_3 = 30 \times 9.8 \times (-20) + 15 \times 9.8 \times (50) = 1471\text{N}\cdot\text{mm}$

〈constant〉

pitching $M_1 = m \cdot g \cdot Xm$

$M_1 = 30 \times 9.8 \times (15) + 15 \times 9.8 \times (80) = 16181\text{N}\cdot\text{mm}$

yawing $M_2 = 0$

rolling $M_3 = m \cdot g \cdot Ym$

$M_3 = 30 \times 9.8 \times (-20) + 15 \times 9.8 \times (50) = 1471\text{N}\cdot\text{mm}$

〈deceleration〉

pitching $Md_1 = m \cdot g \cdot Xm + m \cdot a_3 \cdot (Zm - Zd)$

$Md_1 = 30 \times 9.8 \times (15) + 30 \times 1 \times \{(20) - (30)\} + 15 \times 9.8 \times (80) + 15 \times 1 \times \{(100) - (30)\} = 16931\text{N}\cdot\text{mm}$

yawing $Md_2 = m \cdot a_3 \cdot (Ym - Yd)$

$Md_2 = 30 \times 1 \times \{(-20) - (10)\} + 15 \times 1 \times \{(50) - (10)\} = -300\text{N}\cdot\text{mm}$

rolling $Md_3 = m \cdot g \cdot Ym$

$Md_3 = 30 \times 9.8 \times (-20) + 15 \times 9.8 \times (50) = 1471\text{N}\cdot\text{mm}$

②Calculating Load Applied to the Guide Block

〈acceleration〉

Block 1

vertical direction $Fra_1 = \frac{m \cdot g}{4} - \frac{Ma_1}{2 \cdot L_{unit}} + \frac{Ma_3}{2 \cdot L_{rail}}$

$Fra_1 = \frac{30 \times 9.8}{4} + \frac{15 \times 9.8}{4} - \frac{15431}{2 \times 100} + \frac{1471}{2 \times 100} = 40.5\text{N}$

horizontal direction $Fsa_1 = \frac{Ma_2}{2 \cdot L_{unit}}$

$Fsa_1 = \frac{300}{2 \times 100} = 1.5\text{N}$

Block 2

vertical direction $Fra_2 = \frac{m \cdot g}{4} + \frac{Ma_1}{2 \cdot L_{unit}} + \frac{Ma_3}{2 \cdot L_{rail}}$

$Fra_2 = \frac{30 \times 9.8}{4} + \frac{15 \times 9.8}{4} + \frac{15431}{2 \times 100} + \frac{1471}{2 \times 100} = 194.8\text{N}$

horizontal direction $Fsa_2 = -\frac{Ma_2}{2 \cdot L_{unit}}$

$Fsa_2 = -\frac{300}{2 \times 100} = -1.5\text{N}$

Block 3

vertical direction $Fra_3 = \frac{m \cdot g}{4} - \frac{Ma_1}{2 \cdot L_{unit}} - \frac{Ma_3}{2 \cdot L_{rail}}$

$Fra_3 = \frac{30 \times 9.8}{4} + \frac{15 \times 9.8}{4} - \frac{15431}{2 \times 100} - \frac{1471}{2 \times 100} = 25.8\text{N}$

horizontal direction $Fsa_3 = \frac{Ma_2}{2 \cdot L_{unit}}$

$Fsa_3 = \frac{300}{2 \times 100} = 1.5\text{N}$

Block 4

vertical direction $Fra_4 = \frac{m \cdot g}{4} + \frac{Ma_1}{2 \cdot L_{unit}} - \frac{Ma_3}{2 \cdot L_{rail}}$

$Fra_4 = \frac{30 \times 9.8}{4} + \frac{15 \times 9.8}{4} + \frac{15431}{2 \times 100} - \frac{1471}{2 \times 100} = 180.1\text{N}$

horizontal direction $Fsa_4 = -\frac{Ma_2}{2 \cdot L_{unit}}$

$Fsa_4 = -\frac{300}{2 \times 100} = -1.5\text{N}$

〈constant〉

Block 1

vertical direction $Fr_1 = \frac{m \cdot g}{4} - \frac{Md_1}{2 \cdot L_{unit}} + \frac{Md_3}{2 \cdot L_{rail}}$

$Fr_1 = \frac{30 \times 9.8}{4} + \frac{15 \times 9.8}{4} - \frac{16181}{2 \times 100} + \frac{1471}{2 \times 100} = 36.8\text{N}$

horizontal direction $Fs_1 = \frac{M_2}{2 \cdot L_{unit}}$

Block 2

vertical direction $Fr_2 = \frac{m \cdot g}{4} + \frac{M_1}{2 \cdot L_{unit}} + \frac{M_3}{2 \cdot L_{rail}}$

$Fr_2 = \frac{30 \times 9.8}{4} + \frac{15 \times 9.8}{4} + \frac{16181}{2 \times 100} + \frac{1471}{2 \times 100} = 198.6\text{N}$

horizontal direction $Fs_2 = -\frac{M_2}{2 \cdot L_{unit}}$

Block 3

vertical direction $Fr_3 = \frac{m \cdot g}{4} - \frac{M_1}{2 \cdot L_{unit}} - \frac{M_3}{2 \cdot L_{rail}}$

$Fr_3 = \frac{30 \times 9.8}{4} + \frac{15 \times 9.8}{4} - \frac{16181}{2 \times 100} - \frac{1471}{2 \times 100} = 22.1\text{N}$

horizontal direction $Fs_3 = \frac{M_2}{2 \cdot L_{unit}}$

Block 4

vertical direction $Fr_4 = \frac{m \cdot g}{4} + \frac{M_1}{2 \cdot L_{unit}} - \frac{M_3}{2 \cdot L_{rail}}$

$Fr_4 = \frac{30 \times 9.8}{4} + \frac{15 \times 9.8}{4} + \frac{16181}{2 \times 100} - \frac{1471}{2 \times 100} = 183.9\text{N}$

horizontal direction $Fs_4 = -\frac{M_2}{2 \cdot L_{unit}}$

www.bergab.ru Берг АБ bergab@ya.ru Тел. (495)-228-06-21, факс (495) 223-3071

www.bergab.ru Берг АБ bergab@ya.ru Тел. (495)-228-06-21, факс (495) 223-3071

〈deceleration〉

Block 1

vertical direction $Frd_1=\frac{m\cdot g}{4}-\frac{Md_1}{2\cdot L_{unit}}+\frac{Md_3}{2\cdot L_{rail}}$

$Frd_1=\frac{30\times9.8}{4}+\frac{15\times9.8}{4}-\frac{16931}{2\times100}+\frac{1471}{2\times100}=33.0N$

horizontal direction $Fsd_1=\frac{Md_2}{2\cdot L_{unit}}$

$Fsd_1=\frac{-300}{2\times100}=-1.5N$

Block 2

vertical direction $Frd_2=\frac{m\cdot g}{4}+\frac{Md_1}{2\cdot L_{unit}}+\frac{Md_3}{2\cdot L_{rail}}$

$Frd_2=\frac{30\times9.8}{4}+\frac{15\times9.8}{4}+\frac{16931}{2\times100}+\frac{1471}{2\times100}=202.3N$

horizontal direction $Fsd_2=-\frac{Md_2}{2\cdot L_{unit}}$

$Fsd_2=-\frac{-300}{2\times100}=1.5N$

Block 3

vertical direction $Frd_3=\frac{m\cdot g}{4}-\frac{Md_1}{2\cdot L_{unit}}-\frac{Md_3}{2\cdot L_{rail}}$

$Frd_3=\frac{30\times9.8}{4}+\frac{15\times9.8}{4}-\frac{16931}{2\times100}-\frac{1471}{2\times100}=18.3N$

horizontal direction $Fsd_3=\frac{Md_2}{2\cdot L_{unit}}$

$Fsd_3=\frac{-300}{2\times100}=-1.5N$

Block 4

vertical direction $Frd_4=\frac{m\cdot g}{4}+\frac{Md_1}{2\cdot L_{unit}}-\frac{Md_3}{2\cdot L_{rail}}$

$Frd_4=\frac{30\times9.8}{4}+\frac{15\times9.8}{4}+\frac{16931}{2\times100}-\frac{1471}{2\times100}=187.6N$

horizontal direction $Fsd_4=-\frac{Md_2}{2\cdot L_{unit}}$

$Fsd_4=-\frac{-300}{2\times100}=1.5N$

③Calculating Equivalent Load

◎Pr in the vertical direction and Ps in the horizontal direction are calculated by the following equations.

$Pr=|Fr|$

$Ps=|k\cdot Fs|$

k=1 for SGL guide

Table 1-26

	acceleration	constant	deceleration
block 1	$Pra_1=40.5$	$Pr_1=36.8$	$Prd_1=33.0$
	$Psa_1=1.5$	$Ps_1=0$	$Psd_1=1.5$
block 2	$Pra_2=194.8$	$Pr_2=198.6$	$Prd_2=202.3$
	$Psa_2=1.5$	$Ps_2=0$	$Psd_2=1.5$
block 3	$Pra_3=25.8$	$Pr_3=22.1$	$Prd_3=18.3$
	$Psa_3=1.5$	$Ps_3=0$	$Psd_3=1.5$
block 4	$Pra_4=180.1$	$Pr_4=183.9$	$Prd_4=187.6$
	$Psa_4=1.5$	$Ps_4=0$	$Psd_4=1.5$

◎Equation for Dynamic Equivalent Load

$P=Pr+Ps$

$Pa_1=Pra_1+Psa_1=40.5+1.5=42.0$ (N)
calculating in the same manner

Table 1-27

	acceleration	constant	deceleration
block 1	$Pa_1=42.0$	$P_1=36.8$	$Pd_1=34.5$
block 2	$Pa_2=196.3$	$P_2=198.6$	$Pd_2=203.8$
block 3	$Pa_3=27.3$	$P_3=22.1$	$Pd_3=19.8$
block 4	$Pa_4=181.6$	$P_4=183.9$	$Pd_4=189.1$

◎Calculating Average Equivalent Load

$$Pm=\sqrt[3]{\frac{1}{Ls}\times\left\{\left(Pa^3\times\frac{V_{max}\times t1}{2}\right)+\left(P^3\times V_{max}\times t2\right)+\left(Pd^3\times\frac{V_{max}\times t3}{2}\right)\right\}}$$

$$Pm_1=\sqrt[3]{\frac{1}{700}\times\left\{\left(42.0^3\times\frac{200\times0.2}{2}\right)+\left(36.8^3\times200\times3.3\right)+\left(34.5^3\times\frac{200\times0.2}{2}\right)\right\}}=36.9(N)$$

$$Pm_2=\sqrt[3]{\frac{1}{700}\times\left\{\left(196.3^3\times\frac{200\times0.2}{2}\right)+\left(198.6^3\times200\times3.3\right)+\left(203.8^3\times\frac{200\times0.2}{2}\right)\right\}}=198.7(N)$$

$$Pm_3=\sqrt[3]{\frac{1}{700}\times\left\{\left(27.3^3\times\frac{200\times0.2}{2}\right)+\left(22.1^3\times200\times3.3\right)+\left(19.8^3\times\frac{200\times0.2}{2}\right)\right\}}=22.2(N)$$

$$Pm_4=\sqrt[3]{\frac{1}{700}\times\left\{\left(181.6^3\times\frac{200\times0.2}{2}\right)+\left(183.9^3\times200\times3.3\right)+\left(189.1^3\times\frac{200\times0.2}{2}\right)\right\}}=184.0(N)$$

④Calculating Rated Life

Decide each coefficient

- **hardness coefficient** $f_H=1$ for hardness of guide is 58HRC or more
- **temperature coefficient** $f_T=1$ operating temperature is below 100℃ (80℃ is maximum for SGL guide)
- **contact coefficient** $f_C=1$ for blocks are not in close contact
- **applied load coefficient** $f_W=1.5$ for Vmax=200mm/s

◎Calculating Rated Life
Selecting Block 2 that carries the maximum dynamic equivalent load

$$L=\left(\frac{f_H\times f_T\times f_C}{f_W}\times\frac{C}{Pm}\right)^3\times50$$

$$L=\left(\frac{1\times1\times1}{1.5}\times\frac{7290}{198.7}\right)^3\times50=731619(km)$$

◎Calculating Life Time

$$L_h=\frac{L\times10^3}{2\times\ell_s\times n_1\times60}$$

$$L_h=\frac{731619\times10^3}{2\times0.7\times8\times60}=1088719(hour)$$

www.bergab.ru Берг АБ bergab@ya.ru Тел. (495)-228-06-21, факс (495) 223-3071

www.bergab.ru Берг АБ bergab@ya.ru Тел. (495)-228-06-21, факс (495) 223-3071

⑤Calculating Static Safety Factor

◎Equation for Static Equivalent Load

$$P_o = P_r + P_s$$

$P_{oa1} = P_{ra1} + P_{sa1} = 40.5 + 1.5 = 42.0$ (N)
calculating in the same manner

Table 1-28

	acceleration	constant	deceleration
block 1	$P_{oa1}=42.0$	$P_{o1}=36.8$	$P_{od1}=34.5$
block 2	$P_{oa2}=196.3$	$P_{o2}=198.6$	$P_{od2}=203.8$
block 3	$P_{oa3}=27.3$	$P_{o3}=22.1$	$P_{od3}=19.8$
block 4	$P_{oa4}=181.6$	$P_{o4}=183.9$	$P_{od4}=189.1$

Selecting Block 2 that carries the maximum static equivalent load

$$f_s = \frac{C_o}{P_o}$$

$$f_s = \frac{C_o}{P_{oa1}} = \frac{9400}{203.8} = 46$$

RATED LIFE CALCULATION EXAMPLE 2

1 Horizontal Axis, 2 Blocks, Considering Acceleration/Deceleration

Operating Conditions

part number: SEB9A
basic dynamic load rating $C=1.92$kN
basic static load rating $C_o=2.53$kN
guide block span: $L_{unit}=70$mm
drive: $Y_d=30$mm
$Z_d=-5$mm
mass: $m_1=5$kg $X_1=0$mm
$Y_1=0$mm
$Z_1=10$mm
$m_2=20$kg $X_2=-20$mm
$Y_2=-10$mm
$Z_2=20$mm
velocity: $V_{max}=150$mm/s
time: $t_1=0.1$s
$t_2=1.9$s
$t_3=0.1$s
acceleration: $a_1=1.5$m/s^2
$a_3=1.5$m/s^2
stroke: $L_s=300$mm
number of cycles per minute: $n_1=14$cpm

Figure 1-12

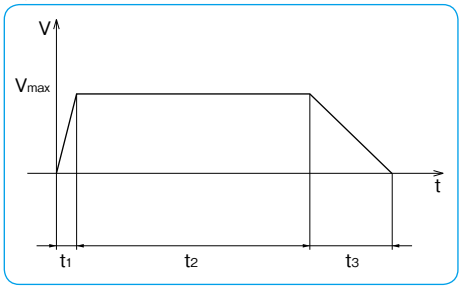

Figure 1-13

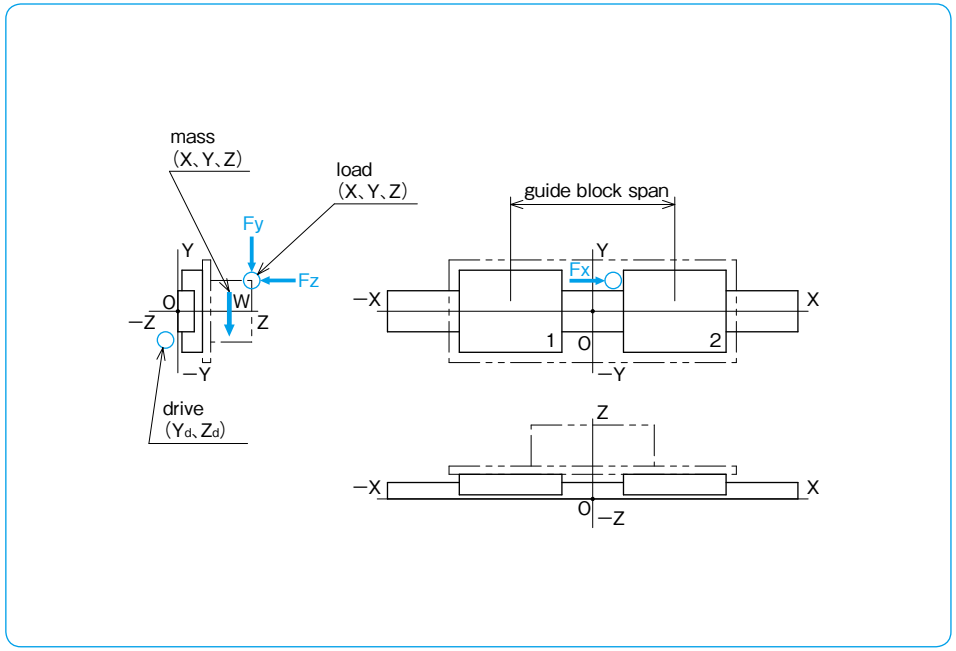

www.bergab.ru Берг АБ bergab@ya.ru Тел. (495)-228-06-21, факс (495) 223-3071

www.bergab.ru Берг АБ bergab@ya.ru Тел. (495)-228-06-21, факс (495) 223-3071

①Calculating Moment Applied to the Unit

〈acceleration〉

pitching $Ma_1 = m \cdot g \cdot Xm - m \cdot a_1 \cdot (Zm - Zd)$

$Ma_1 = 5 \times 9.8 \times (0) - 5 \times 1.5 \times \{(10) - (-5)\} + 20 \times 9.8 \times (-20) - 20 \times 1.5 \times \{(20) - (-5)\} = -4785\,N \cdot mm$

yawing $Ma_2 = -m \cdot a_1 \cdot (Ym - Yd)$

$Ma_2 = -5 \times 1.5 \times \{(0) - (30)\} - 20 \times 1.5 \times \{(-10) - (30)\} = 1425\,N \cdot mm$

rolling $Ma_3 = m \cdot g \cdot Ym$

$Ma_3 = 5 \times 9.8 \times (0) + 20 \times 9.8 \times (-10) = -1961\,N \cdot mm$

〈constant〉

pitching $M_1 = m \cdot g \cdot Xm$

$M_1 = 5 \times 9.8 \times (0) + 20 \times 9.8 \times (-20) = -3923\,N \cdot mm$

yawing $M_2 = 0$

$M_2 = 0\,N \cdot mm$

rolling $M_3 = m \cdot g \cdot Ym$

$M_3 = 5 \times 9.8 \times (0) + 20 \times 9.8 \times (-10) = -1961\,N \cdot mm$

〈deceleration〉

pitching $Md_1 = m \cdot g \cdot Xm + m \cdot a_3 \cdot (Zm - Zd)$

$Md_1 = 5 \times 9.8 \times (0) + 5 \times 1.5 \times \{(10) - (-5)\} + 20 \times 9.8 \times (-20) + 20 \times 1.5 \times \{(20) - (-5)\} = -3060\,N \cdot mm$

yawing $Md_2 = m \cdot a_3 \cdot (Ym - Yd)$

$Md_2 = 5 \times 1.5 \times \{(0) - (30)\} + 20 \times 1.5 \times \{(-10) - (30)\} = -1425\,N \cdot mm$

rolling $Md_3 = m \cdot g \cdot Ym$

$Md_3 = 5 \times 9.8 \times (0) + 20 \times 9.8 \times (-10) = -1961\,N \cdot mm$

②Calculating Load Applied to the Guide Block

〈acceleration〉

Block 1

vertical direction $Fra_1 = \frac{m \cdot g}{2} - \frac{Ma_1}{L_{unit}}$

$Fra_1 = \frac{5 \times 9.8}{2} + \frac{20 \times 9.8}{2} - \frac{-4785}{70} = 190.9\,N$

horizontal direction $Fsa_1 = \frac{Ma_2}{L_{unit}}$

$Fsa_1 = \frac{1425}{70} = 20.4\,N$

rolling moment $Mra_1 = \frac{Ma_3}{2}$

$Mra_1 = \frac{-1961}{2} = -981\,N \cdot mm$

Block 2

vertical direction $Fra_2 = \frac{m \cdot g}{2} + \frac{Ma_1}{L_{unit}}$

$Fra_2 = \frac{5 \times 9.8}{2} + \frac{20 \times 9.8}{2} + \frac{-4785}{70} = 54.2\,N$

horizontal direction $Fsa_2 = \frac{Ma_2}{L_{unit}}$

$Fsa_2 = \frac{-1425}{70} = -20.4\,N$

rolling moment $Mra_2 = \frac{Ma_3}{2}$

$Mra_2 = \frac{-1961}{2} = -981\,N \cdot mm$

〈constant〉

Block 1

vertical direction $Fr_1 = \frac{m \cdot g}{2} - \frac{M_1}{L_{unit}}$

$Fr_1 = \frac{5 \times 9.8}{2} + \frac{20 \times 9.8}{2} - \frac{-3923}{70} = 178.6\,N$

horizontal direction $Fs_1 = \frac{M_2}{L_{unit}}$

rolling moment $Mr_1 = \frac{M_3}{2}$

$Mr_1 = \frac{-1961}{2} = -981\,N \cdot mm$

Block 2

vertical direction $Fr_2 = \frac{m \cdot g}{2} + \frac{M_1}{L_{unit}}$

$Fr_2 = \frac{5 \times 9.8}{2} + \frac{20 \times 9.8}{2} + \frac{-3923}{70} = 66.5\,N$

horizontal direction $Fs_2 = -\frac{M_2}{L_{unit}}$

rolling moment $Mr_2 = \frac{M_3}{2}$

$Mr_2 = \frac{-1961}{2} = -981\,N \cdot mm$

www.bergab.ru Берг АБ bergab@ya.ru Тел. (495)-228-06-21, факс (495) 223-3071

www.bergab.ru Берг АБ bergab@ya.ru Тел. (495)-228-06-21, факс (495) 223-3071

〈deceleration〉

Block 1

vertical direction $Frd_1=\frac{m\cdot g}{2}-\frac{Md_1}{L_{unit}}$

$Frd_1=\frac{5\times9.8}{2}+\frac{20\times9.8}{2}-\frac{-3060}{70}=166.3N$

horizontal direction $Fsd_1=\frac{Md_2}{L_{unit}}$

$Fsd_1=\frac{-1425}{70}=-20.4N$

rolling moment $Mrd_1=\frac{Md_3}{2}$

$Mrd_1=\frac{-1961}{2}=-981N\cdot mm$

Block 2

vertical direction $Frd_2=\frac{m\cdot g}{2}+\frac{Md_1}{L_{unit}}$

$Frd_2=\frac{5\times9.8}{2}+\frac{20\times9.8}{2}+\frac{-3060}{70}=78.9N$

horizontal direction $Fsd_2=-\frac{Md_2}{L_{unit}}$

$Fsd_2=-\frac{-1425}{70}=20.4N$

rolling moment $Mrd_2=\frac{Md_3}{2}$

$Mrd_2=\frac{-1961}{2}=-981N\cdot mm$

③Calculating Equivalent Load

◎Pr in the vertical direction and Ps in the horizontal direction are calculated by the following equations.

$$Pr=|Fr|+|Er\cdot Mr|$$
$$Ps=|k\cdot Fs|$$

Er=0.220 for SEB9A
k=0.84 for SEB-A guide

$Pra_1=|Fra_1|+|Er\cdot Mra_1|=|190.9|+|0.220\times(-981)|=406.7$ (N)
calculating in the same manner

Table 1-29

	acceleration	constant	deceleration
block 1	$Pra_1=406.7$	$Pr_1=394.4$	$Prd_1=382.1$
	$Psa_1=17.1$	$Ps_1=0$	$Psd_1=17.1$
block 2	$Pra_2=270.0$	$Pr_2=282.3$	$Prd_2=294.7$
	$Psa_2=17.1$	$Ps_2=0$	$Psd_2=17.1$

◎Equation for Dynamic Equivalent Load

$$P=Pr+Ps$$

$Pa_1=Pra_1+Psa_1=406.7+17.1=423.8$ (N)
calculating in the same manner

Table 1-30

	acceleration	constant	deceleration
block 1	$Pa_1=416.7$	$P_1=394.2$	$Pd_1=392.1$
block 2	$Pa_2=280$	$P_2=282.1$	$Pd_2=304.7$

◎Calculating Average Equivalent Load

$$Pm=\sqrt[3]{\frac{1}{Ls}\times\left\{\left(Pa^3\times\frac{V_{max}\times t_1}{2}\right)+\left(P^3\times V_{max}\times t_2\right)+\left(Pd^3\times\frac{V_{max}\times t_3}{2}\right)\right\}}$$

$$Pm_1=\sqrt[3]{\frac{1}{300}\times\left\{\left(423.8^3\times\frac{150\times0.1}{2}\right)+\left(394.4^3\times150\times1.9\right)+\left(399.2^3\times\frac{150\times0.1}{2}\right)\right\}}=395.3(N)$$

$$Pm_2=\sqrt[3]{\frac{1}{300}\times\left\{\left(287.1^3\times\frac{150\times0.1}{2}\right)+\left(282.3^3\times150\times1.9\right)+\left(311.8^3\times\frac{150\times0.1}{2}\right)\right\}}=283.2(N)$$

www.bergab.ru Берг АБ bergab@ya.ru Тел. (495)-228-06-21, факс (495) 223-3071

www.bergab.ru Берг АБ bergab@ya.ru Тел. (495)-228-06-21, факс (495) 223-3071

④Calculating Rated Life

Decide each coefficient

- **hardness coefficient** f_H=1 for hardness of guide is 58HRC or more
- **temperature coefficient** f_T=1 operating temperature is below 100℃ (80℃ is maximum for SEB-A guide)
- **contact coefficient** f_C=1 for blocks are not in close contact
- **applied load coefficient** f_W=1.5 for Vmax=150mm/s

◎Calculating Rated Life

Selecting Block 1 that carries the maximum dynamic equivalent load

$$L=\left(\frac{f_H \times f_T \times f_C}{f_W} \times \frac{C}{P_m}\right)^3 \times 50$$

$$L=\left(\frac{1\times1\times1}{1.5}\times\frac{1920}{395.3}\right)^3\times50=1697.5(\text{km})$$

◎Calculating Life Time

$$L_h=\frac{L\times10^3}{2\times\ell_s\times n_1\times60}$$

$$L_h=\frac{1697.5\times10^3}{2\times0.3\times14\times60}=3368(\text{hour})$$

⑤Calculating Static Safety Factor

◎Equation for Static Equivalent Load

$$P_o=P_r+P_s$$

$Poa_1=Pra_1+Psa_1$=406.7+17.1=423.8 (N)
calculating in the same manner

Table 1-31

	acceleration	constant	deceleration
block 1	Poa_1=423.8	Po_1=394.4	Pod_1=399.2
block 2	Poa_2=287.1	Po_2=282.3	Pod_2=311.8

Selecting Block 1 that carries the maximum static equivalent load

$$f_S=\frac{C_o}{P_o}$$

$$f_S=\frac{C_o}{Poa_1}=\frac{2530}{423.8}=5.9$$

RATED LIFE CALCULATION EXAMPLE 3

2 Vertical Axes, 1 Bush each, Considering Acceleration/Deceleration

Operating Conditions

part number: SM30W
basic dynamic load rating C=2.49kN
basic static load rating C_o=5.49kN
shaft span: L_{rail}=80mm
drive: Y_d=0mm
Z_d=−15mm
mass: m_1=5kg X_1=0mm
Y_1=0mm
Z_1=30mm
m_2=20kg X_2=40mm
Y_2=50mm
Z_2=20mm
velocity: V_{max}=150mm/s
time: t_1=0.1s
t_2=0.7s
t_3=0.1s
acceleration: a_1=1.5m/s^2
a_3=1.5m/s^2
stroke: L_s=120mm
number of cycles per minute: n_1=33cpm

Figure 1-14

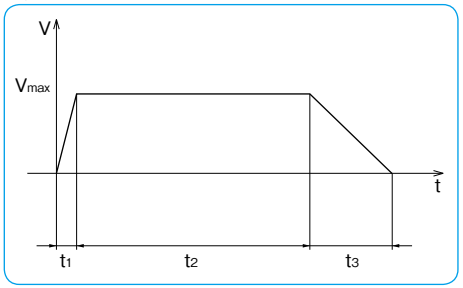

Figure 1-15

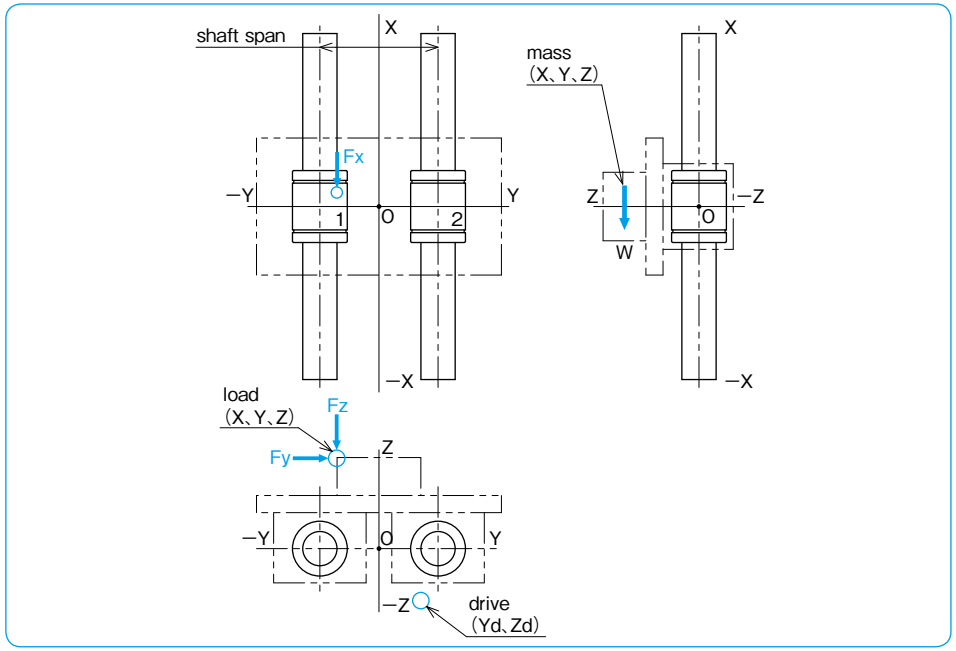

www.bergab.ru Берг АБ bergab@ya.ru Тел. (495)-228-06-21, факс (495) 223-3071

www.bergab.ru Берг АБ bergab@ya.ru Тел. (495)-228-06-21, факс (495) 223-3071

①Calculating Moment Applied to the Unit

〈acceleration〉

pitching $Ma_1 = m \cdot g \cdot (Zm - Zd) + m \cdot a_1 \cdot (Zm - Zd)$

$Ma_1 = 5 \times 9.8 \times \{(30) - (-15)\} + 5 \times 1.5 \times \{(30) - (-15)\} + 20 \times 9.8 \times \{(20) - (-15)\} + 20 \times 1.5 \times \{(20) - (-15)\} = 10459 N \cdot mm$

yawing $Ma_2 = m \cdot g \cdot (Ym - Yd) + m \cdot a_1 \cdot (Ym - Yd)$

$Ma_2 = 5 \times 9.8 \times \{(0) - (0)\} + 5 \times 1.5 \times \{(0) - (0)\} + 20 \times 9.8 \times \{(50) - (0)\} + 20 \times 1.5 \times \{(50) - (0)\} = 11307 N \cdot mm$

rolling $Ma_3 = 0$

〈constant〉

pitching $M_1 = m \cdot g \cdot (Zm - Zd)$

$M_1 = 5 \times 9.8 \times \{(30) - (-15)\} + 20 \times 9.8 \times \{(20) - (-15)\} = 9071 N \cdot mm$

yawing $M_2 = m \cdot g \cdot (Ym - Yd)$

$M_2 = 5 \times 9.8 \times \{(0) - (0)\} + 20 \times 9.8 \times \{(50) - (0)\} = 9807 N \cdot mm$

rolling $M_3 = 0$

〈deceleration〉

pitching $Md_1 = m \cdot g \cdot (Zm - Zd) - m \cdot a_3 \cdot (Zm - Zd)$

$Md_1 = 5 \times 9.8 \times \{(30) - (-15)\} - 5 \times 1.5 \times \{(30) - (-15)\} + 20 \times 9.8 \times \{(20) - (-15)\} - 20 \times 1.5 \times \{(20) - (-15)\} = 7684 N \cdot mm$

yawing $Md_2 = m \cdot g \cdot (Ym - Yd) - m \cdot a3 \cdot (Ym - Yd)$

$Md_2 = 5 \times 9.8 \times \{(0) - (0)\} - 5 \times 1.5 \times \{(0) - (0)\} + 20 \times 9.8 \times \{(50) - (0)\} - 20 \times 1.5 \times \{(50) - (0)\} = 8307 N \cdot mm$

rolling $Md_3 = 0$

②Calculating Load Applied to the Slide Bush

〈acceleration〉

Bush 1

vertical direction $Fra_1 = \frac{Ma_3}{L_{rail}}$

horizontal direction $Fsa_1 = 0$

pitching $Mpa_1 = \frac{Ma_1}{2}$

$Mpa1 = \frac{10459}{2} = 5230 N \cdot mm$

yawing $Mya_1 = \frac{Ma_2}{2}$

$Mya1 = \frac{11307}{2} = 5654 N \cdot mm$

Bush 2

vertical direction $Fra_2 = \frac{Ma_3}{2 \cdot L_{rail}}$

horizontal direction $Fsa_2 = 0$

pitching $Mpa_2 = \frac{Ma_1}{2}$

$Mpa_2 = \frac{10459}{2} = 5230 N \cdot mm$

yawing $Mya_2 = \frac{Ma_2}{2}$

$Mya_2 = \frac{11307}{2} = 5654 N \cdot mm$

〈constant〉

Bush 1

vertical direction $Fr_1 = \frac{M_3}{L_{rail}}$

horizontal direction $Fs_1 = 0$

pitching $Mp_1 = \frac{M_1}{2}$

$Mp_1 = \frac{9071}{2} = 4536 N \cdot mm$

yawing $My_1 = \frac{M_2}{2}$

$My_1 = \frac{9807}{2} = 4904 N \cdot mm$

Bush 2

vertical direction $Fr_2 = \frac{M_3}{L_{rail}}$

horizontal direction $Fs_2 = 0$

pitching $Mp_2 = \frac{M_1}{2}$

$Mp_2 = \frac{9071}{2} = 4536 N \cdot mm$

yawing $My_2 = \frac{M_2}{2}$

$My_2 = \frac{9807}{2} = 4904 N \cdot mm$

www.bergab.ru Берг АБ bergab@ya.ru Тел. (495)-228-06-21, факс (495) 223-3071

www.bergab.ru Берг АБ bergab@ya.ru Тел. (495)-228-06-21, факс (495) 223-3071

〈deceleration〉

Bush 1

vertical direction $Frd_1 = \frac{Md_3}{L_{rail}}$

horizontal direction $Fsd_1 = 0$

pitching $Mpd_1 = \frac{Md_1}{2}$

$Mpd_1 = \frac{7684}{2} = 3842 N \cdot mm$

yawing $Myd_1 = \frac{Md_2}{2}$

$Myd_1 = \frac{8307}{2} = 4154 N \cdot mm$

Bush 2

vertical direction $Frd_2 = \frac{Md_3}{L_{rail}}$

horizontal direction $Fsd_2 = 0$

pitching $Mpd_2 = \frac{Md_1}{2}$

$Mpd_2 = \frac{7684}{2} = 3842 N \cdot mm$

yawing $Myd_2 = \frac{Md_2}{2}$

$Myd_2 = \frac{8307}{2} = 4154 N \cdot mm$

③Calculating Equivalent Load

◎Pr in the vertical direction and Ps in the horizontal direction are calculated by the following equations.

$$Pr = |Fr| + |Ep \cdot Mp|$$
$$Ps = |k \cdot Fs| + |Ey \cdot My|$$

k=1 for Slide Bush

Table 1-32

	acceleration	constant	deceleration
bush 1	$Pra_1 = 346.7$	$Pr_1 = 300.7$	$Prd_1 = 254.7$
	$Psa_1 = 374.9$	$Ps_1 = 325.1$	$Psd_1 = 275.4$
bush 2	$Pra_2 = 346.7$	$Pr_2 = 300.7$	$Prd_2 = 254.7$
	$Psa_2 = 374.9$	$Ps_2 = 325.1$	$Psd_2 = 275.4$

◎Equation for Dynamic Equivalent Load

$$P = Pr + Ps$$

$Pa_1 = Pra_1 + Psa_1 = 346.7 + 374.9 = 721.6$ (N)
calculating in the same manner

Table 1-33

	acceleration	constant	deceleration
bush 1	$Pa_1 = 721.6$	$P_1 = 625.8$	$Pd_1 = 530.1$
bush 2	$Pa_2 = 721.6$	$P_2 = 625.8$	$Pd_2 = 530.1$

◎Calculating Average Equivalent Load

$$Pm = \sqrt[3]{\frac{1}{Ls} \times \left\{ \left(Pa^3 \times \frac{V_{max} \times t_1}{2}\right) + \left(P^3 \times V_{max} \times t_2\right) + \left(Pd^3 \times \frac{V_{max} \times t_3}{2}\right) \right\}}$$

$$Pm_1 = \sqrt[3]{\frac{1}{120} \times \left\{ \left(721.6^3 \times \frac{150 \times 0.1}{2}\right) + \left(625.8^3 \times 150 \times 0.7\right) + \left(530.1^3 \times \frac{150 \times 0.1}{2}\right) \right\}} = 620 (N)$$

$$Pm_2 = \sqrt[3]{\frac{1}{120} \times \left\{ \left(721.6^3 \times \frac{150 \times 0.1}{2}\right) + \left(625.8^3 \times 150 \times 0.7\right) + \left(530.1^3 \times \frac{150 \times 0.1}{2}\right) \right\}} = 620 (N)$$

www.bergab.ru Берг АБ bergab@ya.ru Тел. (495)-228-06-21, факс (495) 223-3071

www.bergab.ru Берг АБ bergab@ya.ru Тел. (495)-228-06-21, факс (495) 223-3071

④Calculating Rated Life

Decide each coefficient

- **hardness coefficient** f_H=1 for hardness of bush is 58HRC or more
- **temperature coefficient** f_T=1 operating temperature is below 100℃ (80℃ is maximum for Bush with resin retainer)
- **contact coefficient** f_C=1 for bushes are not in close contact
- **applied load coefficient** f_W=1.5 for Vmax=150mm/s

◎Calculating Rated Life

Selecting Bush 1 that carries the maximum equivalent load

$$L=\left(\frac{f_H \times f_T \times f_C}{f_W} \times \frac{C}{P_m}\right)^3 \times 50$$

$$L=\left(\frac{1\times1\times1}{1.5}\times\frac{2490}{620}\right)^3\times50=960(\text{km})$$

◎Calculating Life Time

$$L_h=\frac{L\times10^3}{2\times\ell_s\times n_1\times60}$$

$$L_h=\frac{960\times10^3}{2\times0.120\times33\times60}=2020(\text{hour})$$

⑤Calculating Static Safety Factor

◎Equation for Static Equivalent Load

$$P_o=P_r+P_s$$

$P_{oa1}=P_{ra1}+P_{sa1}$=346.7+374.82=721.52 (N)
calculating in the same manner

Table 1-34

	acceleration	constant	deceleration
bush 1	P_{oa1}=721.6	P_{o1}=625.8	P_{od1}=530.1
bush 2	P_{oa2}=721.6	P_{o2}=625.8	P_{od2}=530.1

Selecting Bush 1 that carries the maximum static equivalent load

$$f_S=\frac{C_o}{P_o}$$

$$f_S=\frac{C_o}{P_{oa1}}=\frac{5490}{721.6}=7.6$$

RIGIDITY AND PRELOAD

Effect of Preload and Rigidity

The rigidity of a linear system must be taken into consideration when it is to be used in high-precision positioning devices or high-precision machinery. Preloaded slide guides and ball splines, which use balls as the rolling elements, are available upon request to meet the need for greater rigidity.
If a force is applied to the ball elements without preload, an elastic deformation proportional to the applied force to the 2/3 power will result. Therefore, the elastic deformation is relatively large during the initial loading stage, however then becomes smaller as the load increases.
Preloading on the rolling elements absorbs the deformation of the block under the same loading.
Please contact NB for available data in regard to rigidity.

Figure 1-16 Applied Load versus Block Deformation

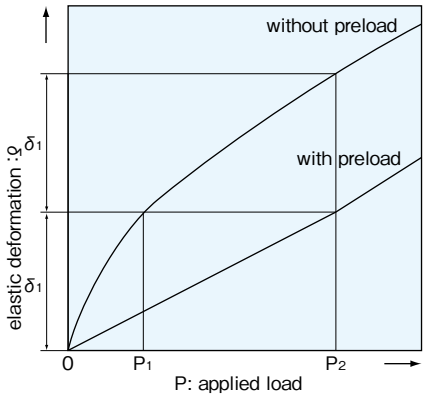

Types of Preload and its Specification

Preload is categorized into three ranges: standard, light, and medium for option. In the NB linear system, preload is applied by installing rolling elements that are slightly larger than standard. Therefore, the specification of the preload is expressed by a negative value.

www.bergab.ru Берг АБ bergab@ya.ru Тел. (495)-228-06-21, факс (495) 223-3071

www.bergab.ru Берг АБ bergab@ya.ru Тел. (495)-228-06-21, факс (495) 223-3071

FRICTIONAL RESISTANCE AND REQUIRED THRUST

The static friction of a linear system is extremely low. Since the difference between the static and dynamic friction is marginal, stable motion can be achieved from low to high speed. The frictional resistance (required thrust) can be obtained from the load and the seal resistance unique to each type of system using the following equation:

$$F=\mu \cdot W+f \quad \cdots\cdots (14)$$

F: frictional resistance (N) μ: dynamic friction coefficient
W: applied load (N) f: seal resistance (N)

The dynamic friction coefficient varies with the applied load, preload, viscosity of the lubricant, and other factors. However, the values given in Table 1-35 are used for the normal loading condition (20% of basic dynamic load rating) without any preload.
The seal resistance depends on the seal-lip condition as well as on the condition of the lubricant, however, it does not change proportionally with the applied load, which commonly is expressed by a constant value of 2 to 5 N.

Table 1-35 Dynamic Friction Coefficient

product	type	dynamic friction coefficient (μ)
Slide Guide	SGL・GL・SGW	0.002～0.003
	SEB	0.004～0.006
	SER	0.004～0.006
Ball Spline	SSP	0.004～0.006
Rotary Ball Spline	SPR	0.004～0.006
Slide Bush	SM・KB SW・GM SMA・SME	0.002～0.003
Top Ball	TK・TKA TKE・TKD TW・TWA TWJ・TWD	0.002～0.003
Stroke Bush	SR	0.0006～0.0012
Slide Rotary Bush	RK	0.002～0.003
Slide Way	NV・SV・RV	0.001～0.003
Slide Table	NVT・SVT・SYT	0.001～0.003
Miniature Slide	SYBS	0.001～0.003

Figure 1-17 Applied Load versus Dynamic Friction Coefficient

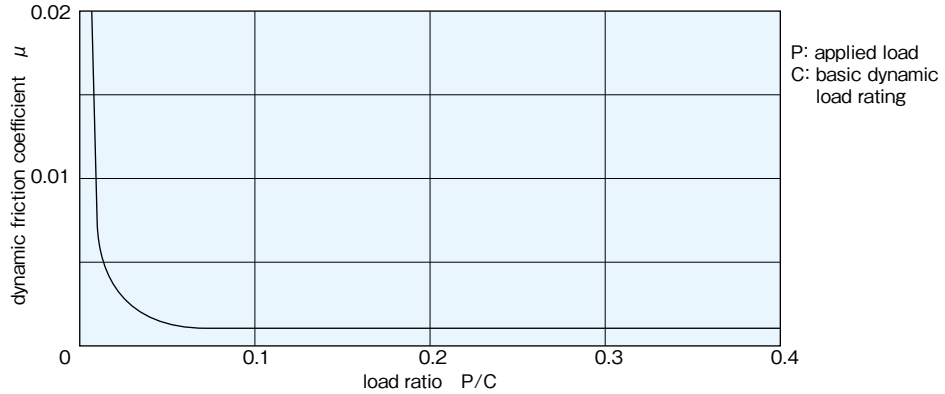

OPERATING ENVIRONMENT

Temperature Range

The NB linear systems are heat-treated in order to harden the surface. Therefore, if the temperature of the linear system exceeds 100℃, the hardness and load rating will be reduced (refer to page Eng-5, hardness coefficient). If resin is used in any one of the components, the system cannot be used in a high-temperature environment. The recommended operating temperature ranges for each type of linear system are listed in Table 1-36.

Table 1-36 Major Types and Recommended Temperature Range

component material	includes resin	steel	stainless	other
operating temperature range	−20℃～80℃	−20℃～110℃	−20℃～140℃*	
Slide Guide	SEB-A/SEBS-B SGL/GL/SGW	SER	SEBS-BM SERS	
Ball Spline	SSP/SSPF/SSPB		SPLFS	
Rotary Ball Spline	SPR			
Slide Bush	SM G/KB G/ SW G/SMS G/ KBS G/SWS G/GM SMA G/AK G/RB CE/CD	SM/KB/SW SMA/AK	SMS/KBS/SWS SMSA/AKS	
Top Ball	TK/TKA TKE/TKD TW/TWA TWJ/TWD			
Stroke Bush		SR/SRB		
Slide Rotary Bush	RK	SRE		
Slide Way	NV	SV/RV	SVS	
Slide Table	NVT	SVT/SYT	SYTS	SVTS**
Miniature Slide			SYBS	
Slide Screw		SS		

* If the system is made of stainless steel and has a seal, the temperature range is up to 120℃
** Please contact NB if the system is to be used out of room temperatures.

Operating Environment

Foreign particles or dust in the linear system affects the motion accuracy and shortens the life time. Standard seals will perform well for dust prevention under normal operating conditions, however, in a harsh environment it is necessary to attach bellows or protective covers as Figure 1-18 shows.

Figure 1-18 Example of Dust Prevention

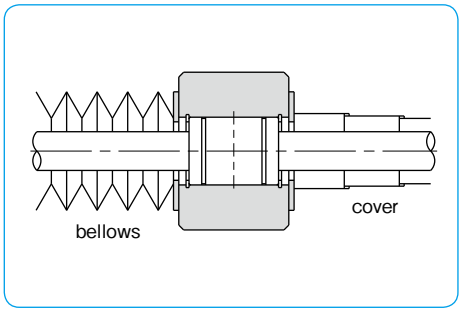

www.bergab.ru Берг АБ bergab@ya.ru Тел. (495)-228-06-21, факс (495) 223-3071

www.bergab.ru Берг АБ bergab@ya.ru Тел. (495)-228-06-21, факс (495) 223-3071

LUBRICATION

The objective of lubrication includes the reduction of friction among the rolling elements as well as between the rolling elements and the raceway, prevention of sintering, reduction of wear, and the prevention of rust by forming a film over the surfaces. To maximize the performance of a linear system, the lubricant type and a lubrication method appropriate for the operating environment should be selected.
There are two types of lubrication; oil lubrication and grease lubrication. For oil lubrication, turbine oil conforming to ISO standard VG32 to 68 is recommended.
For grease lubrication, lithium soap based grease No.2 is recommended. For slide bush and some other products, anti-rust oil that does not adversely affect the lubricant is applied prior to shipment. Please apply lubricant before using these products. (see Table 1-37) Products with raceway grooves, such as slide guide, are delivered pre-lubricated with grease for immediate use. Please relubricate with a similar type of grease periodically depending on the operating conditions. The recommended relubrication period is about 6 months or 1,000km of travel distance under normal conditions.

Table 1-37 Grease and Anti-rust oil

type	grease application
Slide Guide	grease pre-applied
Ball Spline	grease pre-applied
Rotary Ball Spline	grease pre-applied
Slide Bush	anti-rust oil only
Stroke Bush	anti-rust oil only
Slide Rotary Bush	anti-rust oil only
Slide Way	grease pre-applied
Slide Table	grease pre-applied
Miniature Slide	grease pre-applied

NB provides the following optional greases. Please select one in accordance with the use conditions of your linear system.

●KGL Grease (Low Dust Generation Grease)

KGL Grease has an excellent property of low dust generation with a lithium-type thickening agent used. It is ideal for use in a clean room.

●KGU Grease (Low Dust Generation Grease)

With urea-type thickening agent used, KGU Grease has features including a superior low dust generation property and the reduced dynamic frictional resistance during low-speed operation.

Table 1-38 Main Property

item	grease name	
	KGL Grease	KGU Grease
appearance	light yellowish-white	light brown
base oil	synthetic oil and refined oil mixed	synthetic oil and refined oil mixed
kinematic viscosity of base oil (mm^2/s, 40℃)	32	approx. 85
thickening agent	lithium soap	urea
mixture viscosity	237	246
drop point (℃)	201	250 or higher
copper plate corrosion (100℃, 24hrs)	passed	passed
evaporation (mass%)	0.8 (99℃ 22h)	0.61 (150℃ 22h)
oil separation (mass% 100℃, 24hrs)	0.9	0.1
oxidation stability (MPa99℃, 100hrs)	0.04	0.015
bearing corrosion prevention (52℃, 48hrs)	passed	passed
operating temperature range (℃)	−20~120	−20~150

Figure 1-19 Dust Level Measurement Data

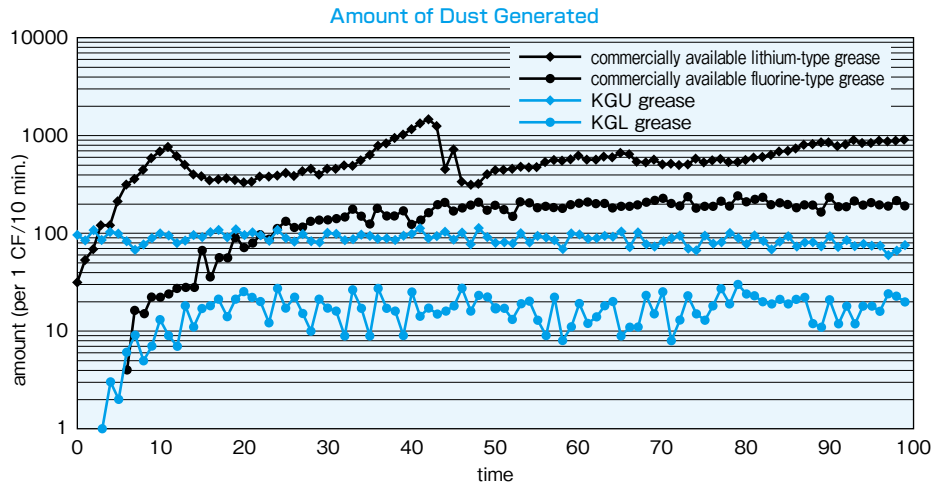

measurement conditions / work: SEBS9B; stroke: 200 mm; velocity: 700 mm/s
airflow: $3m^3$/min; particle diameter: 0.3μm or larger

Figure 1-20 Dynamic Frictional Resistance Measurement Data

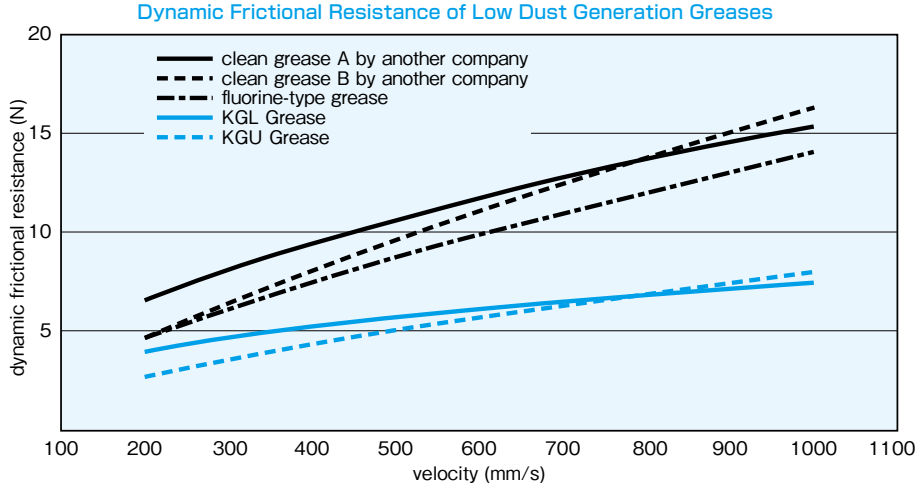

SGL15TE without seals, normal preload, no load, grease volume: 1cc

www.bergab.ru Берг АБ bergab@ya.ru Тел. (495)-228-06-21, факс (495) 223-3071

www.bergab.ru Берг АБ bergab@ya.ru Тел. (495)-228-06-21, факс (495) 223-3071

●KGF Grease (Anti-fretting/Anti-corrosion Grease)

With urea-type thickening agent used, KGF Grease is very effective to prevent fretting and corrosion.

Table 1-39 Main Property

item	grease name KGF Grease
appearance	brown
base oil	synthetic oil
kinematic viscosity of base oil (mm^2/s, 40℃)	approx. 25
thickening agent	urea
mixture viscosity	292
drop point (℃)	250 or higher
copper plate corrosion (100℃, 24 hrs)	passed
evaporation (mass%)	0.27 (99℃ 22h)
oil separation (mass%100℃, 24 hrs)	1.1
oxidation stability (MPa99℃, 100 hrs)	0.085
bearing corrosion prevention (52℃, 48 hrs)	passed
rinsing water resistance (38℃, 1 hr)	1.7
operating temperature range (℃)	−20～150

Anti-fretting/Anti-corrosion Test Data

Table 1-40 Test Conditions

item	content
tested item	NVT4165
stroke	2 mm
acceleration	2.4G
average acceleration	5.8 m/min
cycle per minute	1,450 cpm
grease injection volume	0.5 cc
total travel distance	184 km
total cycles	46 million cycles

Figure 1-21 Raceway Condition after Testing

KGF Grease (fretting not generated)

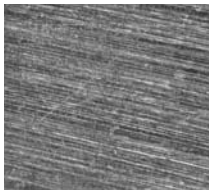

general grease (fretting generated)

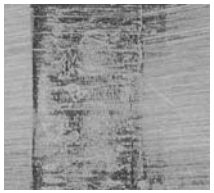

●Other Grease

In addition to KGL, KGU, and KGF Greases, NB also provides K Grease, urea-type low dust generation grease.

Table 1-41 Main Property

item	grease name K Grease
appearance	yellow white
thickening agent	urea-type
base oil	synthetic oil
viscosity	280 (No.2)
operating temperature range (℃)	−30～150

PRECAUTIONS FOR HANDLING AND USE

Please follow the instructions below to maintain the accuracy of NB linear system as a precision part and for a safety use.

⚠ (1) Notes on Handling

①Any shock load caused by rough handling (such as dropping or hitting with hammer) may cause a scar or dent on the raceway which will hinder smooth movement and shorten expected travel life. Also be aware that such impact may damage the resin parts.

②Never try to disassemble the product. Doing so may cause an entry of contamination or deterioration of assembly accuracy.

③The blocks or the outer cylinders may move just by tilting the rail or the shaft. Be careful not to let them fall off from the rail or the shaft by mistake.

④The accuracy on the mounting surface and parallelism of the rails or the shafts after assembly are important factors to optimize the performance of the linear system. Exercise adequate care for mounting accuracy.

⚠ (2) Notes on Use

①Be careful not to let dust or foreign particles enter the linear system during use.

②When using the linear system under an environment where dust or coolant may scatter, protect the system with a cover or bellows.

③When the NB linear system is used in a manner that its rail is fixed to the ceiling and downward load is applied to the block (s) or the outer cylinder (s), if the block or the outer cylinder breaks, it may fall off from the rail and drop to the floor. Provide additional measures for preventing dropping of the block or the outer cylinder, such as a safety catch.

⚠ (3) Instructions in considering the "Life Time" of a Linear System

①When the load applied to a block or an outer cylinder exceeds 0.5 time of the basic dynamic load rating (P > 0.5C), the actual life of the system may become shorter than a calculated life time. Therefore, it is recommended to use the system with 0.5C or lower.

②In the repetition of very minute stroke, where the rolling element, a steel ball or a cylindrical roller, makes only less than a half turn, early wear called fretting occurs at the contact points between the rolling elements and the raceway. There is no perfect measure to avoid this, but the life of the system can be extended by using anti-fretting grease and moving the blocks or the outer cylinders for the full stroke length once in a few thousand times of use.

Anti-fretting grease is available as an option. Please select it for applications with very minute stroke length.

www.bergab.ru Берг АБ bergab@ya.ru Тел. (495)-228-06-21, факс (495) 223-3071

www.bergab.ru Берг АБ bergab@ya.ru Тел. (495)-228-06-21, факс (495) 223-3071

SLIDE GUIDE

www.bergab.ru Берг АБ bergab@ya.ru Тел. (495)-228-06-21, факс (495) 223-3071

www.bergab.ru Берг АБ bergab@ya.ru Тел. (495)-228-06-21, факс (495) 223-3071

SLIDE GUIDE

NB slide guides are high-precision and high-rigidity linear bearings designed to utilize the motion of rolling elements. They have numerous advantageous characteristics including low friction, no stick-slip, and smooth linear motion even under high load conditions. Since they can maintain their high-efficiency and high-functionality characteristics for an extended period of time, they meet a wide range of needs, from general industrial to precision machinery.

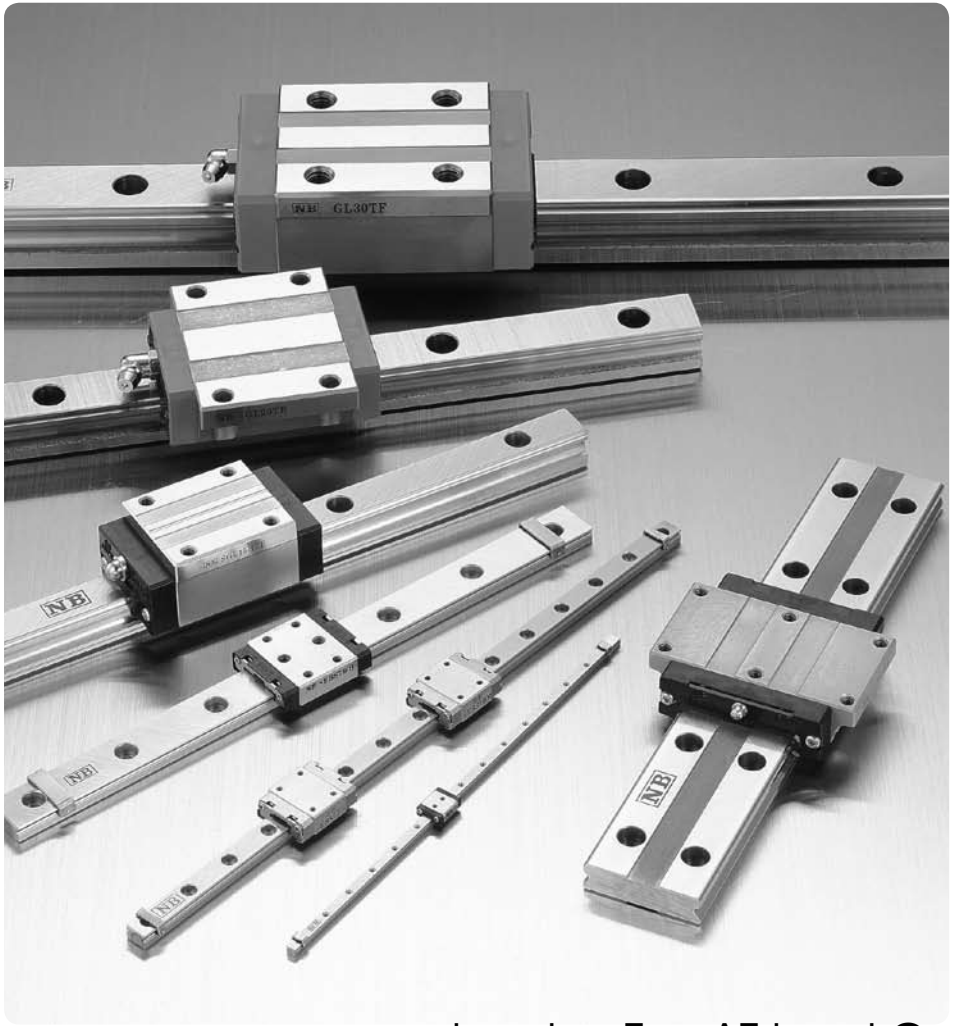

TYPES

Table A-1 Types

	rolling element	cross section and contact structure	advantages	page
miniature type	ball	retained ball, 2-row, 4-point contact (SEBS-B type) 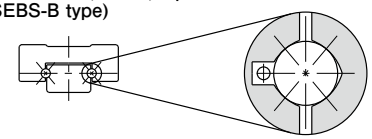	● retained ball type ● available with all stainless steel components ● 2-row, compact ● small, light, cost effective	P.A-20
		2-row, 4-point contact (SEB-A type) 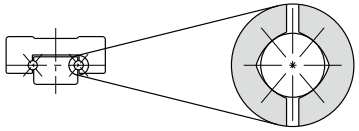	● 2-row, compact ● small, light, cost effective ● available in various types ● available in stainless steel	P.A-20
	roller	cross roller (SER type) 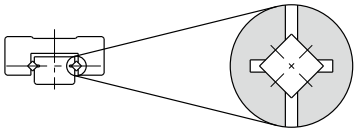	● miniature roller guide ● cross roller, high precision ● available with all stainless steel components	P.A-34
high-rigidity type	ball	4-row, 2-point contact (SGL type) 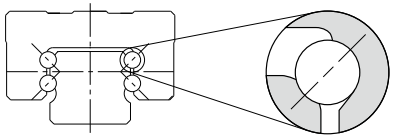	● high self-centering characteristics ● high load capacity due to relatively large ball elements ● high dust preventive control with side-seals and under-seals	P.A-42
		4-row, 2-point contact (GL type) 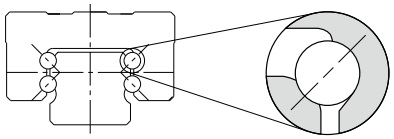	● ball cushions contributing to low noise ● increased relubrication period by the Fiber Sheet ● high load capacity due to relatively large ball elements	P.A-42
		4-row, 2-point contact (SGW type) 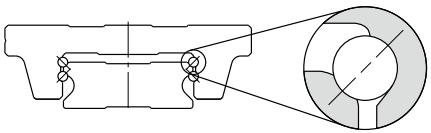	● high-moment resistant ● low-height design ● smooth motion due to large number of effective balls ● high dust preventive control with side-seals and under-seals	P.A-78

www.bergab.ru Берг АБ bergab@ya.ru Тел. (495)-228-06-21, факс (495) 223-3071

www.bergab.ru Берг АБ bergab@ya.ru Тел. (495)-228-06-21, факс (495) 223-3071

ACCURACY MEASUREMENT METHOD

The accuracy of slide guides is measured by fixing the rail to the reference base. The accuracy is expressed in terms of the average value at the center portion.

Dimensional Tolerance and Paired Difference

The accuracy of the slide guide is obtained by measuring the height H, and width W, as shown in Figure A-1. The dimensional tolerance is measured for each of the blocks attached to the rail and is expressed in terms of the deviation from the basic dimension. The paired difference is obtained by measuring the blocks attached to the rail and is expressed in terms of the difference between the maximum and minimum values.

Figure A-1 Accuracy Measurement

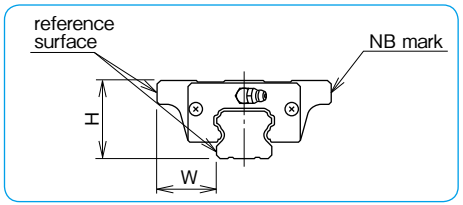

Motion Accuracy

The rail is first fixed to the reference base. The motion accuracy is obtained by measuring the difference in the indicator readings when the block is moved along the entire span of the rail.

Note: Gauge head is placed on the center of the block reference surface.

Figure A-2 Measurement Method for Motion Accuracy

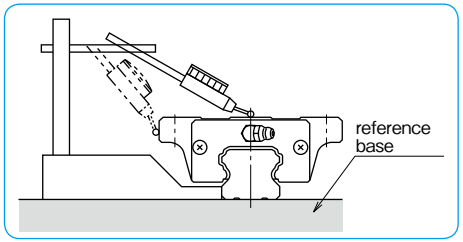

Notation for Number of Axes and Paired Difference

When more than one rail is used in parallel, the dimensional difference must be measured on more than one block on more than one rail. For measuring the paired difference for height H, please specify the number of axes (W2, W3) as the part number example shows. For measuring the paired difference for width W, please contact NB.

Note : When four rails are used as illustrated in Figure A-3, W4 should be specified in the part number. Please indicate the number of axes when ordering.

part number example

SGL25TF2-350/W2

symbol for number of axes
W2: 2 parallel axes
W3: 3 parallel axes

Figure A-3 4 Parallel Axes

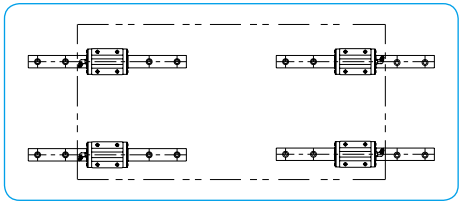

RIGIDITY AND PRELOAD

The rolling elements of the slide guide deform elastically due to the applied load. The amount of deformation depends on the type of rolling element. It is proportional to the 2/3rd power for ball elements. For rollers, it is proportional to the 0.9th power. In either case, the rate of deformation decreases as the applied load increases. Greater rigidity is achieved by applying a preload.

A preload causes internal stress within the slide guide block, resulting in some reduction in lifetime. However, when the guide is used under shock or vibration loading conditions, a preload will absorb the load and will actually help lengthen the life time. Because the preload causes elastic deformation of the rolling elements, it becomes less tolerable to the installation dimensional errors. Extreme care should be exercised in machining the installation surface.

Four levels of preload are available: clearance, standard, light, and medium. This allows the user to select the appropriate level for the application.

Figure A-4 Elastic Deformation of Rolling Elements

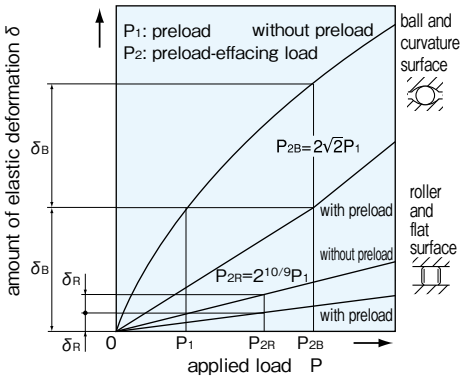

Table A-2 Level of Preload

preload	symbol	effect of preload: vibration absorption ability	self-aligning ability	lifetime	rigidity	frictional resistance	operating conditions	applicable part number
clearance	T0	increases	reduces	reduces	increases	increases	light motion is required. installation errors to be absorbed.	SEB
standard	blank						minute vibration is applied. accurate motion is required. moment is applied in a given direction.	SEB,SGL GL,SGW
light	T1						light vibration is applied. light torsional load is applied. moment is applied.	SEB,SGL GL,SGW
medium	T2						shock and vibration are applied. over-hang load is applied. torsional load is applied.	SGL,GL SGW

www.bergab.ru Берг АБ bergab@ya.ru Тел. (495)-228-06-21, факс (495) 223-3071

www.bergab.ru Берг АБ bergab@ya.ru Тел. (495)-228-06-21, факс (495) 223-3071

LOAD RATING AND RATED LIFE

Loading Direction and Load Rating

A slide guide experiences load and moment, as shown in Figure A-5. For each load and moment, the basic load ratings and allowable static moments are defined.

Figure A-5 Direction of Load

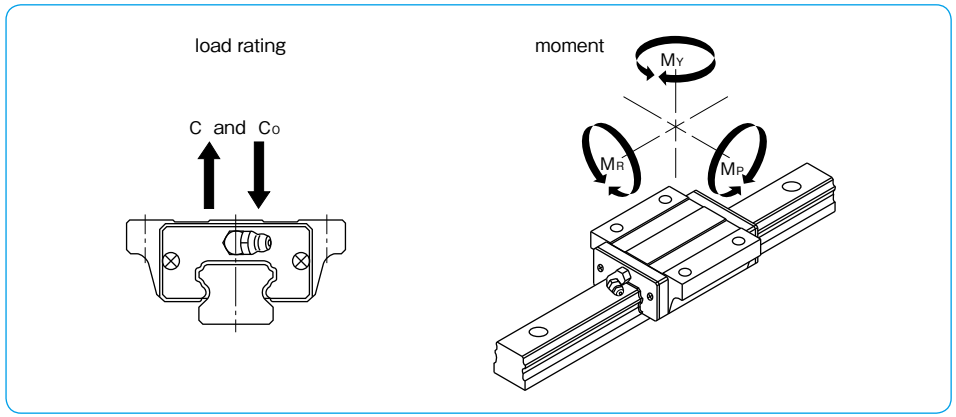

Rated Life Calculation

Two types of rolling elements are used in NB slide guides: ball and roller elements. There is a different equation for calculating the rated life of each type.

For ball elements
(SEB, SGL, and SGW types), the equation is

$$L=\left(\frac{f_C \cdot f_T}{f_W} \cdot \frac{C}{P}\right)^3 \cdot 50$$

For roller elements
(SER type), the equation is

$$L=\left(\frac{f_C \cdot f_T}{f_W} \cdot \frac{C}{P}\right)^{10/3} \cdot 50$$

L: rated life (km) f_C: contact coefficient
f_T: temperature coefficient f_W: applied load coefficient
C: basic dynamic load rating (N) P: applied load (N)
※ Refer to page Eng-5 for the coefficients.
※ The contact coefficient is applied when two or more blocks are used in close contact.

If the stroke length and cycles are constant, life can be expressed in terms of time, the equation is

$$L_h=\frac{L \cdot 10^3}{2 \cdot \ell_S \cdot n_1 \cdot 60}$$

L_h: life time (hr) ℓ_S: stroke length (m)
L: rated life (km) n_1: number of cycles per minute (cpm)

MOUNTING

Slide guides have high load ratings in spite of their compact size. They can be used in various types of machinery and other equipment in various configurations. Figure A-6 shows some typical slide guide arrangements.

Figure A-6 Slide Guide Arrangements

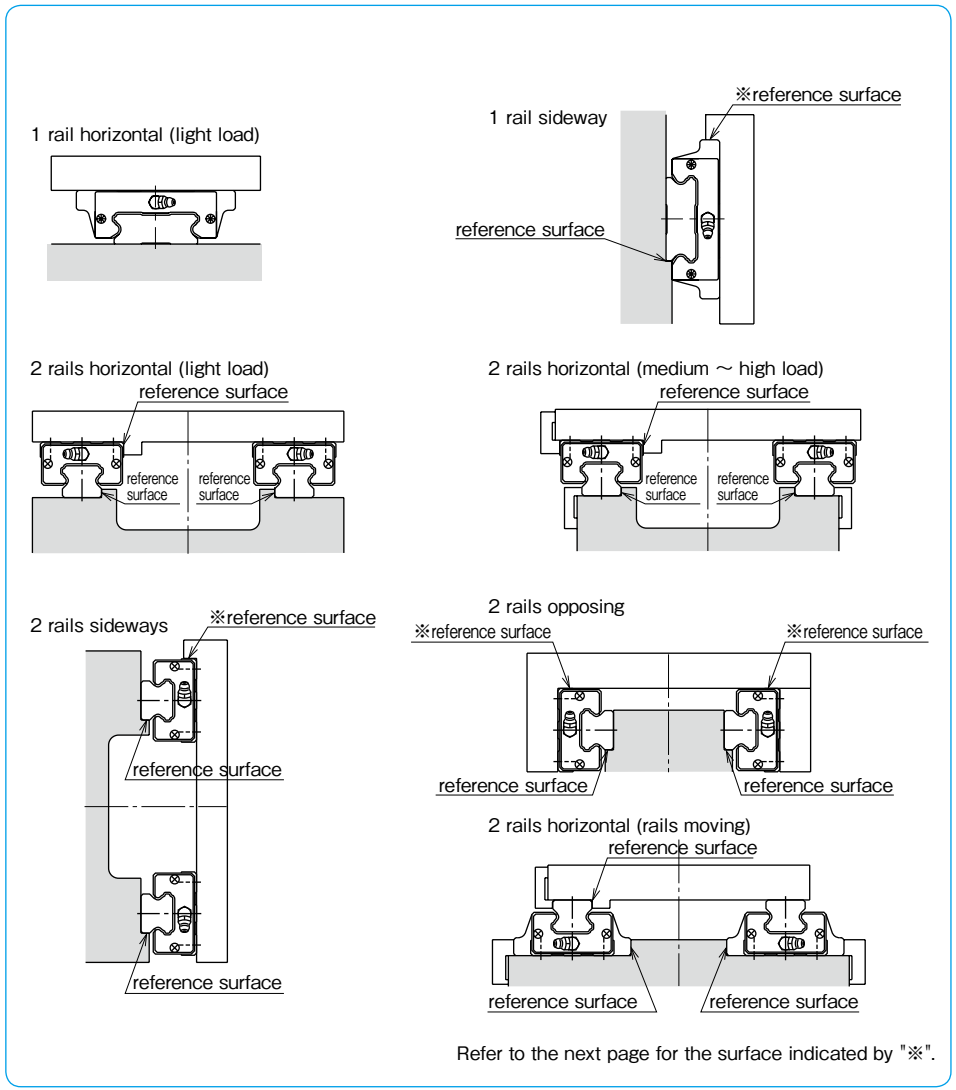

Refer to the next page for the surface indicated by "※".

www.bergab.ru Берг АБ bergab@ya.ru Тел. (495)-228-06-21, факс (495) 223-3071

www.bergab.ru Берг АБ bergab@ya.ru Тел. (495)-228-06-21, факс (495) 223-3071

Mounting Surface and Accuracy

NB slide guides are designed and fabricated to achieve high accuracy after mounting them to a machined mounting base. One typical way is to provide a shoulder on the mounting surface and align the reference surface of the rail or block against the shoulder (Figure A-7). To avoid corner interference, an escape groove should be provided at the shoulder corner. Alternatively, the radius of the shoulder corner should be smaller than the radius of the slide guide block/rail corner.
The accuracy of the rail mounting surface affects the accuracy of the machinery or equipment along with the slide guide motion accuracy.
The accuracy of the mounting surface should be equivalent to that of the slide guide motion accuracy. The specified preload may not be achieved due to deformation of the block, for example, the mounted block surface is not flat (Figure A-8). Careful attention should therefore be given to achieve the specified flatness.

Note: Please contact NB for the rail straightness in case the mounting shoulder cannot be provided or the rigidity of the mounting surface is not enough.

Reference Surface Indication

Reference surfaces are provided to enable accurate and simplified mounting. They are located on the same side, as shown in Figure A-9, opposite to the NB mark.
Depending on the mounting arrangement, the standard reference surface may not ensure mounting accuracy (for example, 1 rail sideway or 2 rails opposing, Figure A-6, page A-7). In such cases, NB can provide a reference surface on the opposite side. Please specify the side when ordering.

Figure A-7 Profile of Mounting Reference Surface

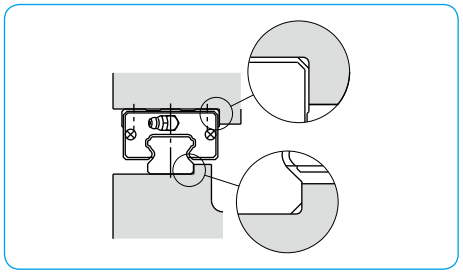

Figure A-8 Effect of Flatness

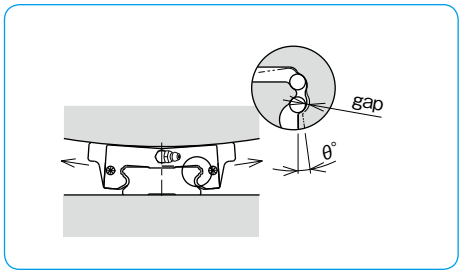

Figure A-9 Reference Surface

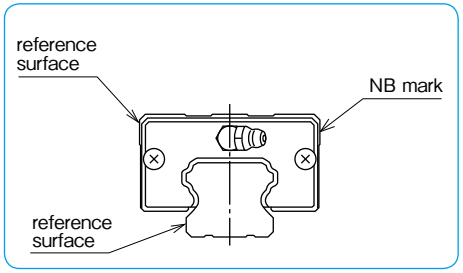

Mounting

In general, slide guides are used with 2 rails in parallel. In that case, one rail is on the so-called reference side and the other is on the so-called adjustable side.

- Applications where shock/vibration and high load are involved/high accuracy is required. The effect of shock and vibration on accuracy is eliminated by using side pieces such as side plates (Figure A-10), tightening set screws (Figure A-11), or tapered gibs (Figure A-12).

Figure A-11 Using Tightening Set Screw

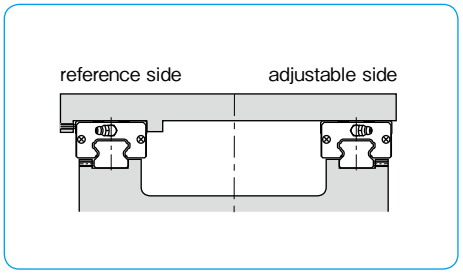

Figure A-10 Using Side Plate

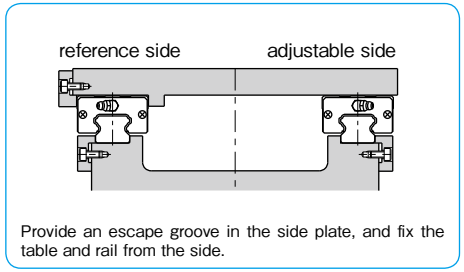

Provide an escape groove in the side plate, and fix the table and rail from the side.

Figure A-12 Using Tapered Gib

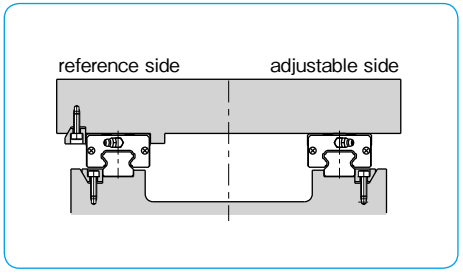

- Applications where light load and low speed are involved.
  Figures A-13~15 show the mounting methods when high accuracy is not required or the load capacity of the slide guide is sufficient due to a light load or low speed. In these cases, side pieces or reference surface may not be required.

Figure A-14 No Reference Surface on Adjustable Side

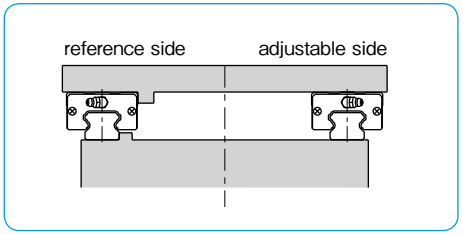

Figure A-13 Without Side Piece

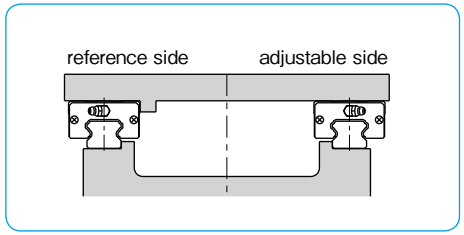

Figure A-15 Without Reference Surface

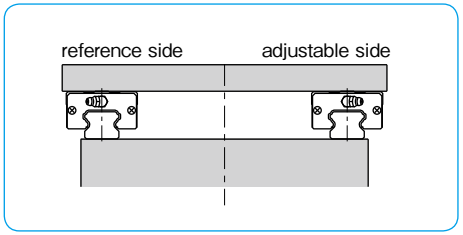

www.bergab.ru Берг АБ bergab@ya.ru Тел. (495)-228-06-21, факс (495) 223-3071

www.bergab.ru Берг АБ bergab@ya.ru Тел. (495)-228-06-21, факс (495) 223-3071

Mounting Procedure

When reference surfaces are provided for both the table and the base, please follow the following procedure to mount the slide guide.

1. Remove burrs, scratches, dust, etc. from the base and table. Apply a low viscosity oil to the base and the table. Place the slide guide on the base carefully. Temporarily fix the rail mounting screws. (Figure A-16a)

2. Tighten the screw for the side piece so that the installation reference surface and the rail reference surface are in close contact. (Figure A-16b) If a side piece is not provided, use a C clamp to position the mounting reference surface and the rail reference surface so that they contact each other. (Figure A-16d)

3. Tighten the mounting screws to the specified torque, and complete the mounting of the rail. The rail is designed so that its accuracy is optimum when the screws are tightened to the specified value. Please refer to the recommended torque table for each product type. (Figure A-16c)

4. Repeat steps 2 and 3 for the rail on the adjustable side.

5. Move the blocks at the mounting location of the table, and place the table gently. Then slightly tighten the screws. (Figure A-16e)

6. Fix the reference surface of the block against the table by the side piece. Tighten the mounting screws in a diagonal sequence. (Figure A-16f)

7. In the same manner, tighten the mounting screws for the blocks on the adjustable side. (Figure A-16g)

8. Finally, move the table through the stroke length to check if thrust is even. Please repeat 5 and 6 (2 to 6 when necessary) if thrust is not even. If thrust is even, please do final tightening of the screws.

Figure A-16 Mounting Method

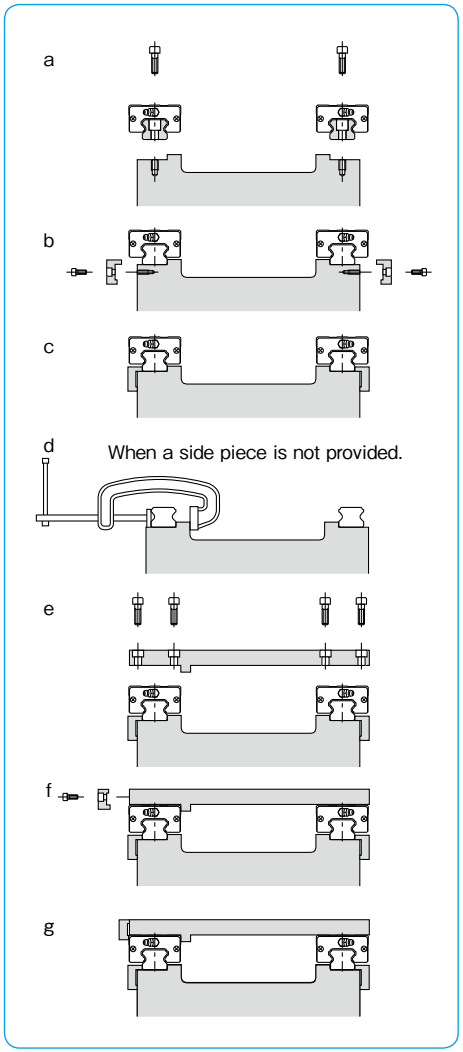

When Reference Surface is Not Provided on Adjustable Side

When a reference surface is not provided on the adjustable side, mount the 2 rails in parallel by using a jig, as mounted in Figure A-17. After mounting the reference-side guide, install the adjustable-side guide by moving the table to achieve parallelism.

Figure A-17 Using a Jig

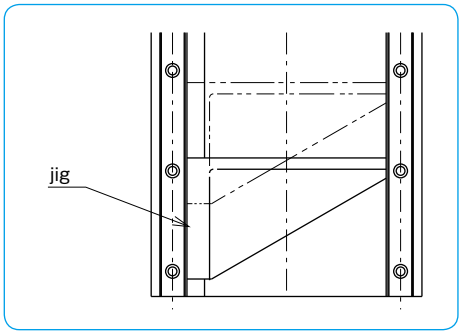

When Reference Surface is Not Provided on Reference Side

When a reference surface is not provided on the reference side, mount the 2 rails by using a reference surface close to the slide guide.
Temporarily fix the slide guide to the base, and mount an indicator on a measurement plate. Please fix the measurement plate on two or more blocks. (Figure A-18)
Place the indicator against the reference surface of the base. Tighten the screws from one end of the rail to ensure straightness.
If there is no reference surface close-by, use a straight edge to achieve straightness. (Figure A-19)

Figure A-18 Using Base Reference Surface

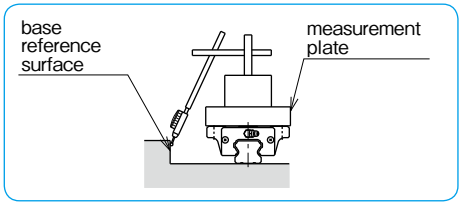

Figure A-19 Using a Straight Edge

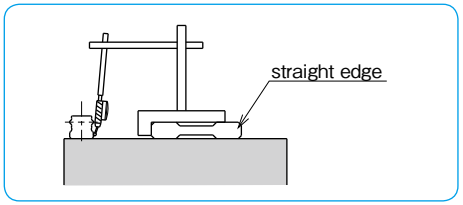

www.bergab.ru Берг АБ bergab@ya.ru Тел. (495)-228-06-21, факс (495) 223-3071

www.bergab.ru Берг АБ bergab@ya.ru Тел. (495)-228-06-21, факс (495) 223-3071

NOTES ON HANDLING AND USE

NB Slide Guides are accurately tuned precision components. Please pay special attention to the following notes.

- Please install the Slide Guide as a set. It is not recommended to remove the block for installation.
- When block removal is necessary, please use a temporary (plastic dummy) rail to prevent balls from dropping out.
- To put a guide block on the rail, as the pictures below show, align the reference surface and the height between the rail and a temporary rail. It is very important to maintain the original combination of block(s) and rail.

Figure A-20 How to Put Guide Block on

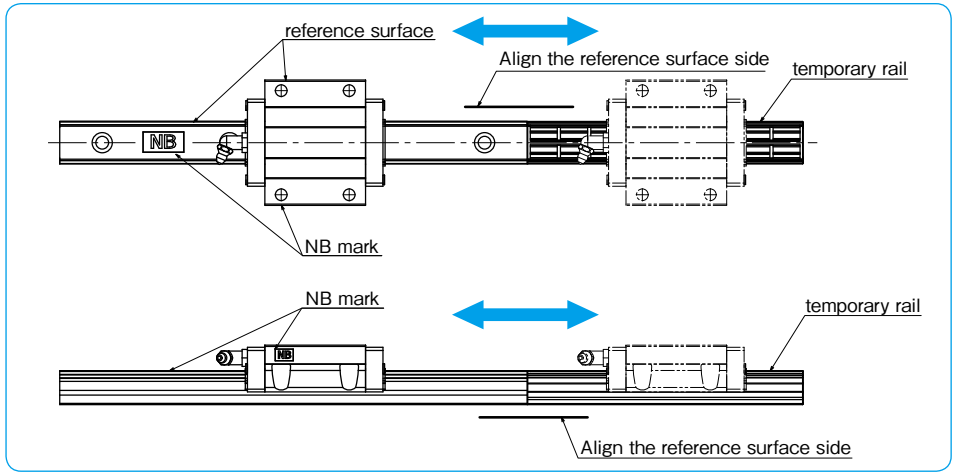

- Please do not turn around a block on the rail to change the grease-fitting orientation. Relocate fitting to the opposite end by removing red plug, and re-insert red plug to where fitting was originally.
- Never try to disassemble the block. This will most assuredly void warranty of the product.
- Please remove burrs, dust, or any other debris from the base and table before installation.
- Slide Guides are pre-lubricated for immediate use. Please relubricate with a similar type of grease regularly. Special lubricants must be matched with the same type of grease to prevent contamination.
- The SEB(S) and SER(S) Slide Guides have metal clip stoppers (picture below) to avoid a block fall-out during shipment and assembly. Please remove the stoppers only after installation is finished with a screwdriver as these clips should not be used as 'mechanical' stoppers.

Figure A-21 How to Take Off Metal Clip

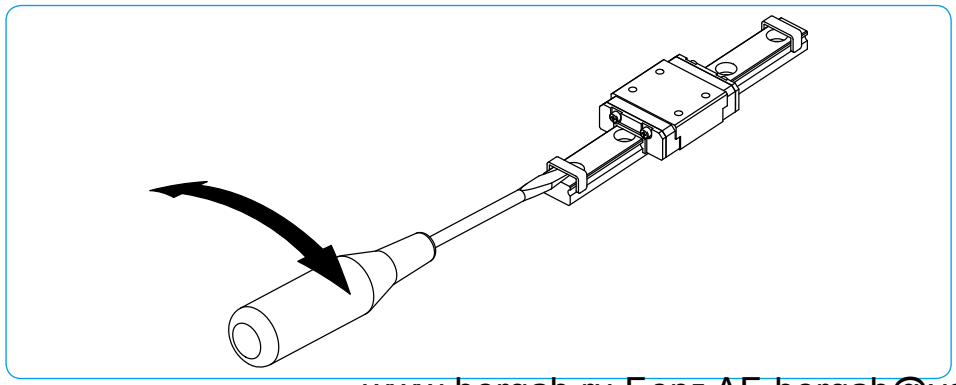

RAIL LENGTH

Guide Rail Length

Please refer to the maximum rail length for each type and size on the dimension table. Unless otherwise specified, the distance from one end of the rail to the first hole center (referred to as dimension "N") is within the range specified in the N dimension tables, satisfying the following equation. Please specify the N dimensions when out of the range.

$$L = M \cdot P + 2N$$

Figure A-22 Rail

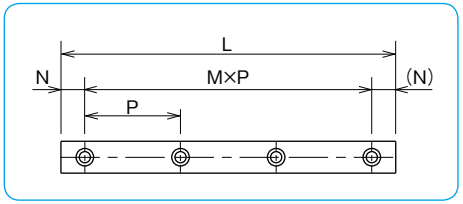

L: length (mm) P: hole pitch (mm)
N: distance from the end of the rail to the first hole center (mm)
M: number of pitches.

JOINT RAILS

Rails can be joined together to obtain a length which exceeds the maximum length. There are two ways to do this.

- Place the joints at the same location for the right and left rails so as to make the design and maintenance simple (Figure A-23 ①).
- Place the joints for the right and left rails at different locations so that the block does not move over the two joints at the same time so as to minimize the effect of the joint on accuracy (Figure A-23 ②).

Please keep the following points in mind when using joint rails.

- To avoid dislocation at joints due to shock loading, provide a shoulder at the joint on the installation side.
- If a shoulder cannot be provided, make sure that any excess load does not change the rail position.
- Use the joint marks provided for installation.
- Tightly butt the rails to be joined so that there is no gap between them.
- Make sure the reference surface side of the joint rails to be aligned.

Note: Joined rails are available for SGL and SGW series with standard grade, high grade, and with standard preload. For joined rails on SEB series, please contact NB. Joined rails are not available for GL and SER series.

Figure A-23 Examples of Joined Guide Rails

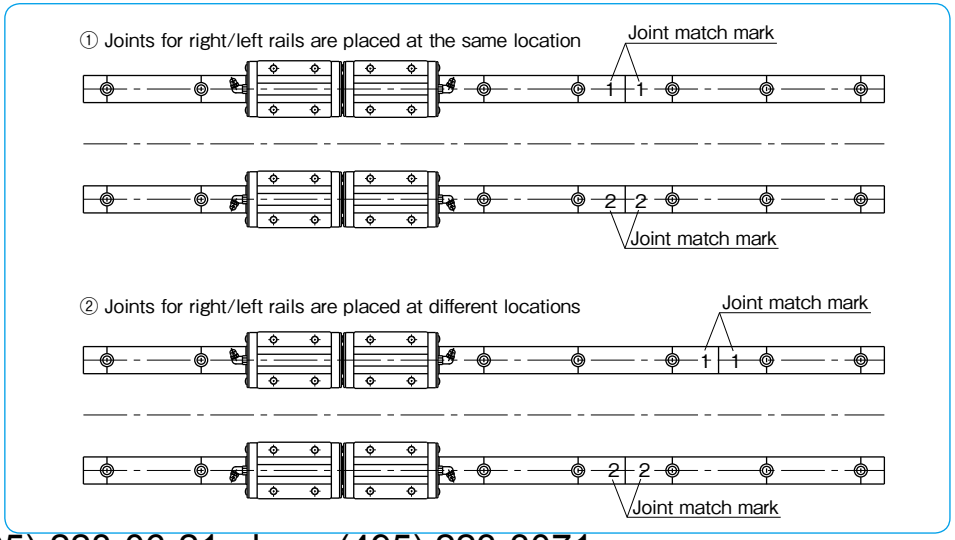

www.bergab.ru Берг АБ bergab@ya.ru Тел. (495)-228-06-21, факс (495) 223-3071

www.bergab.ru Берг АБ bergab@ya.ru Тел. (495)-228-06-21, факс (495) 223-3071

DUST PREVENTION

Seals

Side-Seal
(Series: SEB, SER, SGL, GL, and SGW)

The side-seals prevent foreign particles and dust from entering the guide block in order to retain the motion accuracy, resulting in a long life time.

Under-Seal (Series: SGL, GL, and SGW)

Slide guides with side and under-seals are used in harsh environments or to prevent dust entering from below.

Figure A-24 Side-Seal and Under-Seal

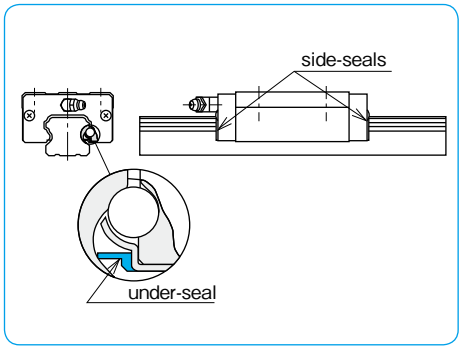

Double Side-Seal Option (Series: SGL and GL)

With this option, the prevention against dust is greatly improved. Ideal for use in applications where bellows or covers are not able to be fitted over the slide guide system.

Figure A-25 Double Side-Seal

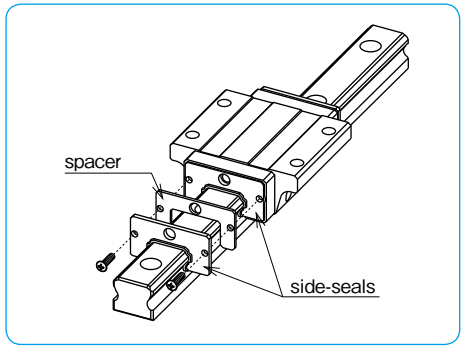

Scraper Option (Series: SGL and GL)

When the application environment has unfavorable foreign matter or debris such as welding splatter or cutting debris, the scraper option provides an effective protective measure for the slide guide system.

Figure A-26 Scraper

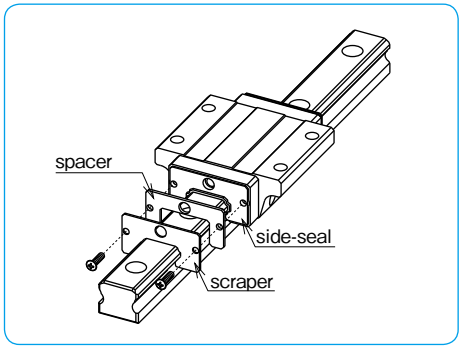

No Side-Seal (Series: SEB and SER)

When the presence of dust or debris is extremely low and only minor motion resistance is desired, a no side-seal option is available. Be aware that, with this option, dust prevention can not be expected.

Bellows Option (Series: SGL and GL)

This option fully covers the guide rail preventing dust, debris, and other foreign particles from disrupting the smooth linear motion. (Refer to page A-16 for further details)

Figure A-27 Bellows

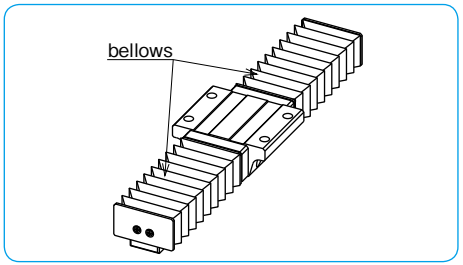

Special Cap

For SGL, GL, and SGW guides, special rail mounting caps are available to prevent dust from entering the mounting holes.
These caps are installed, after the rail is fixed to the base, by using a jig and slowly inserting them into the holes until their top surface is flush with the rail surface.

Figure A-28 Special Cap

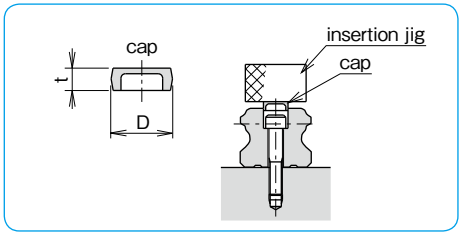

Table A-3 Special Cap

part number	dimensions D mm	dimensions t mm	applicable part number GL-F,E, TF,TE	GL-HTF, HTE	SGL-F,E, TF,TE	SGL-HTF,HYF HTE,HYE,HTEX	SGW
F 3	6.1	1.3	15	–	15	–	–
F 4	7.6	1.1	15D	15	15D	15	17,21,27
F 5	9.7	2.5	20	20	20	20	–
F 6	11.2	2.7	25,30	25	25,30	25	35
F 8	14.3	3.65	35	30,35	35	30,35	–
F12	20.3	4.65	–	45	–	45	–

ANTI-CORROSION

For anti-corrosion, the SEB and SER series are available in stainless steel material. Low temperature black chrome treatment can be specified for the SGL, GL, and SGW series. This treatment (LB) is suitable for applications where corrosion resistance is a requirement.

LUBRICATION

Lithium soap based grease is applied to NB slide guides prior to shipment for immediate use. Please relubricate with a similar type of grease periodically depending on the operating conditions.
For SGL, GL, and SGW types, the **Fiber Sheet** is available which significantly extends relubrication period (refer to page A-18).
For use in clean rooms or vacuum environments, slide guides without grease or slide guides with customer specified grease are also available. Please contact NB.
NB also provides low dust generation grease. Please refer to page Eng-39 for details.

www.bergab.ru Берг АБ bergab@ya.ru Тел. (495)-228-06-21, факс (495) 223-3071

www.bergab.ru Берг АБ bergab@ya.ru Тел. (495)-228-06-21, факс (495) 223-3071

BELLOWS

By protecting the entire length of the guide rail, the dust prevention is greatly enhanced.
Please refer to Figure A-29 for dimensions. External dimensions and the stroke length of slide guide will change with use of bellows.

Figure A-29 Dimensions of Slide Guide with Bellows

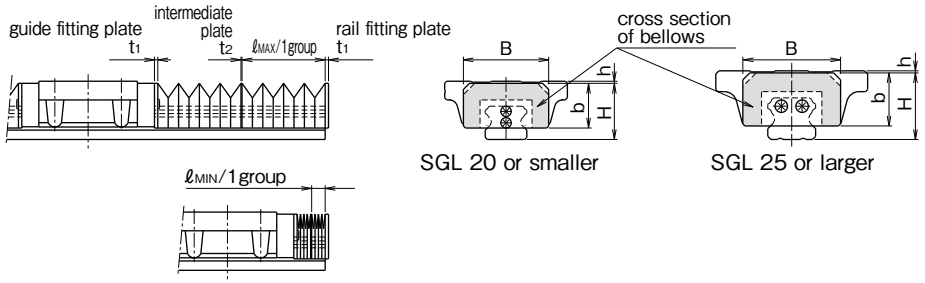

Note: Please do not unfasten the guide fitting plate screws. The slide guide becomes unfunctional if the guide fitting plate is removed.

part number		B	H	h	b	t_1	t_2	ℓ_{MAX}/1group	ℓ_{MIN}/1group
SGL15F/TF/E/TE	GL15F/TF/E/TE	33	23	1	19	1.5	1.0	32	6.5
SGL15HTE/HYE/HTEX	GL15HTE								
SGL15HTF/HYF	GL15HTF			5					
SGL20F/TF/E/TE	GL20F/TF/E/TE	41	27	1	21.5			40	
SGL20HTF/HYF/HTE/HYE/HTEX	GL20HTF/HTE			3					
SGL25F/TF/E/TE	GL25F/TF/E/TE	47	32	1	25.5			44	
SGL25HTF/HYF	GL25HTF			8					
SGL25HTE/HYE/HTEX	GL25HTE			4					
SGL30F/TF/E/TE	GL30F/TF/E/TE	58	40	2	31			56	
SGL30HTE/HYE/HTEX	GL30HTE								
SGL30HTF/HYF	GL30HTF			5					
SGL35F/TF/E/TE	GL35F/TF/E/TE	68	46	2	37			68	
SGL35HTE/HYE/HTEX	GL35HTE								
SGL35HTF/HYF	GL35HTF			9					
SGL45HTE/HYE/HTEX	GL45HTE	84	59	1	50	2.0		72	
SGL45HTF/HYF	GL45HTF			11					

Note: 1 group indicates the minimum unit of bellows. Please specify the required stroke length.
When bellows are fitted to the guide block, the grease fitting cannot be installed.
Please contact NB for details on the installation of bellows, as well as for special application usage.

Calculation Method of Length of Bellows and Slide Guide Rail

Example: In this case, one(1) piece of SGL15TE guide block is mounted on a rail with bellows; the required stroke is 440mm.

Number of groups required for a stroke of 440mm is calculated as follows.

$$\frac{\text{Stroke}}{\ell_{MAX}-\ell_{MIN}}=\frac{440}{32-6.5}=17.2\fallingdotseq 18 \text{ groups (round up)}$$

When 18 groups of bellows are fitted, the maximum length ℓ_1 is calculated:

ℓ_1=guide fitting plate+1group ℓ_{MAX}×number of groups+Intermediate plate× (number of groups−1)
=1.5+32×18+1.0× (18−1) =594.5

When 18 groups of bellows are fitted, the minimum length ℓ_2 is calculated:

ℓ_2=guide fitting plate+1group ℓ_{MIN}× number of groups+intermediate plate× (number of groups−1)
=1.5+6.5×18+1.0× (18−1) =135.5

With these calculation results, stroke limit (S) and length of the guide rail needed (L) are obtained as follows:

S= $\ell_1-\ell_2$=594.5−135.5=459

L= $\ell_1+\ell_2$+SGL15TE block=594.5+135.5+56.5=786.5≒787 (round up)

Figure A-30 External Diagram of Slide Guide with Bellows Attached

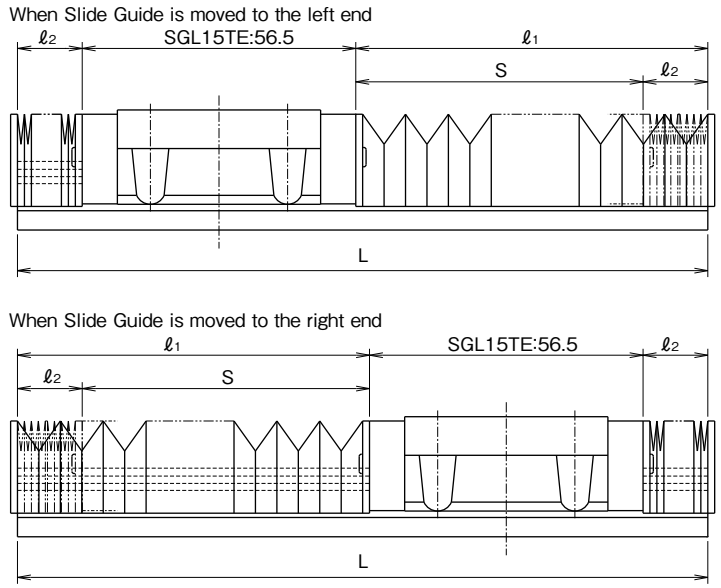

www.bergab.ru Берг АБ bergab@ya.ru Тел. (495)-228-06-21, факс (495) 223-3071

www.bergab.ru Берг АБ bergab@ya.ru Тел. (495)-228-06-21, факс (495) 223-3071

FIBER SHEET

The Fiber Sheet for the SGL, GL, and SGW types, significantly extends lubricant replenishment intervals and has an excellent durability even under harsh conditions with dust and debris that absorb lubricant. Embedded in a block body, as shown in Figure A-31, it does not change the length of the block. In addition, the Fiber Sheet does not require any change in mounting dimensions, which allows replacement with existing products without a design change.

Figure A-31 Magnified View of the Fiber Sheet

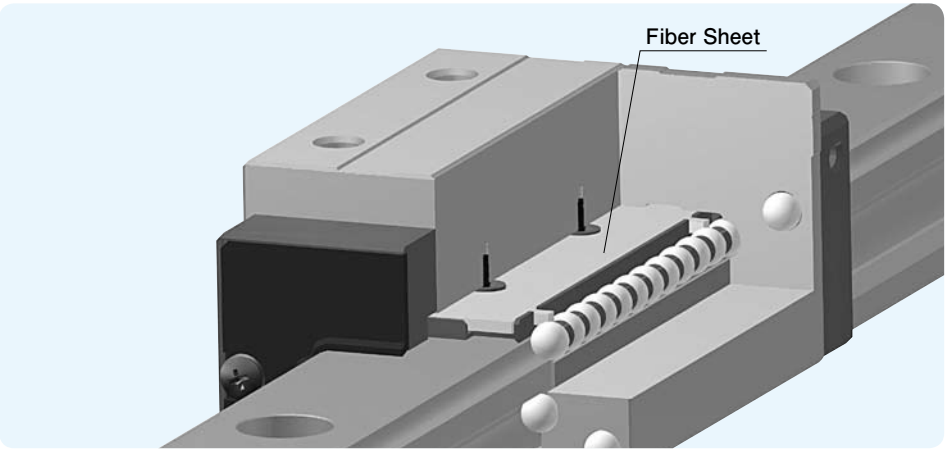

Simplified Lubrication Management

NB's Fiber Sheet is a fiber material with a porous structure containing the lubricant oil. The oil is supplied to the ball elements at the proper time and with the proper amount by the principle of capillarity, greatly increasing the relubrication period.

Figure A-32 Durability Test

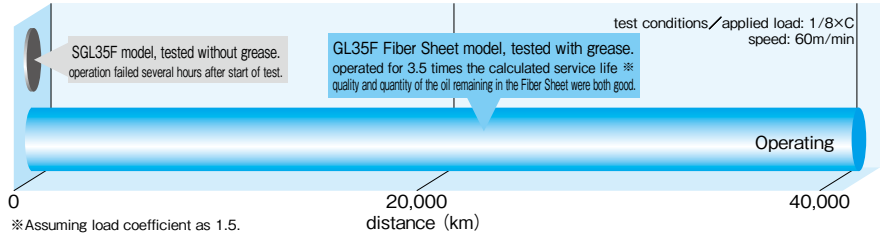

※Assuming load coefficient as 1.5.

Outstanding Durability Even Under Poor Operating Conditions

An acceleration test was performed with oil absorbing material sprayed on the units to validate the GL type's lubrication performance and durability even under poor operating conditions.

Figure A-33 Lubrication Acceleration Test

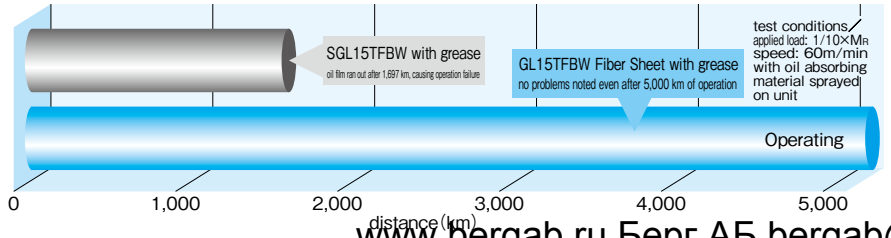

SEB TYPE AD PROFILE (Anti-Deforming)

The AD profile guide block can dissipate possible deformation by improved installation plane profile. (Patent Pending)

Figure A-34 SEB type AD profile

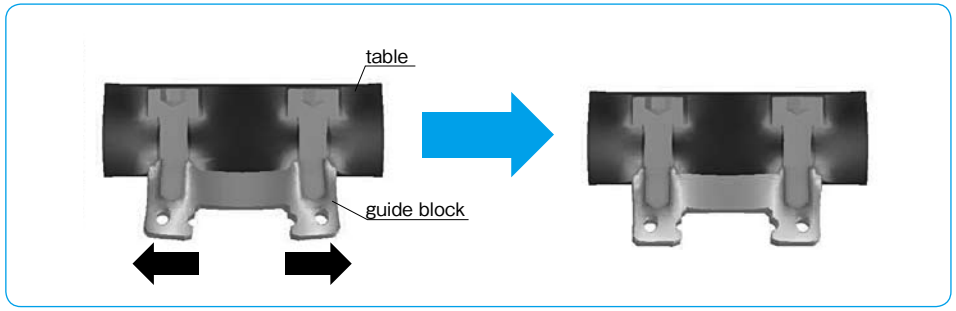

Note:

When NB's unique AD Profile type miniature guide block is selected, the following precautions should be taken into consideration to perform to its utmost advantage.

- ●To obtain maximum AD (Anti-Deforming) effect, flatness of the mounting surface should be finished the same as motion accuracy of the slide guide.
- ●When the table is designed with one guide block on one guide rail, the utmost AD effect is anticipated.
- ●All screws on the slide guide block should be tightened to the equal torque value.
- ●The AD profile type guide block is available only with standard preload.
- ●AD profile type guide blocks are available only with following part numbers of slide guide block.

Applicable Part Number

Figure A-4 AD profile Applicable Part Number

part number			
SEBS 7B	SEBS 7BM	—	SEBS 7A
SEBS 7BY	SEBS 7BYM		SEBS 7AY
SEBS 9B	SEBS 9BM	SEB 9A	SEBS 9A
SEBS 9BY	SEBS 9BYM	SEB 9AY	SEBS 9AY
SEBS12B	SEBS12BM	SEB12A	SEBS12A
SEBS12BY	SEBS12BYM	SEB12AY	SEBS12AY
SEBS15B	SEBS15BM	SEB15A	SEBS15A
SEBS15BY	SEBS15BYM	SEB15AY	SEBS15AY
SEBS20B	SEBS20BM	SEB20A	SEBS20A
SEBS20BY	SEBS20BYM	SEB20AY	SEBS20AY

part number structure

SEBS 15B UU 2 - 589 N P AD

AD profile

※Please contact NB for details.

www.bergab.ru Берг АБ bergab@ya.ru Тел. (495)-228-06-21, факс (495) 223-3071

www.bergab.ru Берг АБ bergab@ya.ru Тел. (495)-228-06-21, факс (495) 223-3071

SLIDE GUIDE Miniature SEB Type

The NB slide guide SEB type is a linear motion bearing in which the ball elements roll along two raceway grooves. This is the smallest and lightest slide guide series offered by Nippon Bearing. The compact design allows for the size and weight of machinery and other equipment to be reduced.

STRUCTURE AND ADVANTAGES

The SEB type slide guide consists of a rail with precisely machined raceway grooves and a block assembly consisting of the main body, return caps and ball elements.

Retained Ball

Because of the ball retainers, the SEBS-B type is able to be removed from the guide rail, simplifying its installation and resulting in lower assembly costs.

All Stainless Steel Type

By using stainless steel for the return caps, the SEBS-BM type is made of all stainless steel components, making it the ideal choice for special environments such as high temperature, clean room, or vacuum applications.

Moment Resistant

A wide block (WB/WA) type, a long block (BY/AY) type, and a wide/long block (WBY/WAY) type are moment resistant slide guide types. The most suitable type can be selected for any demanding operating condition.

Tapped Hole Rail Type

For the SEB rails, counterbore (standard) and optional tapped hole (N) types are available enabling various installation methods.

Compact Design

SEB type has a 2-row, 4-point contact structure. This structure minimizes the installation height, which contributes to light-weight and miniaturization of machinery and equipment.

AD Profile

AD profile dissipates guide block deformation caused by installation. (refer to page A-19)

Figure A-35 Structure of SEB type Slide Guide

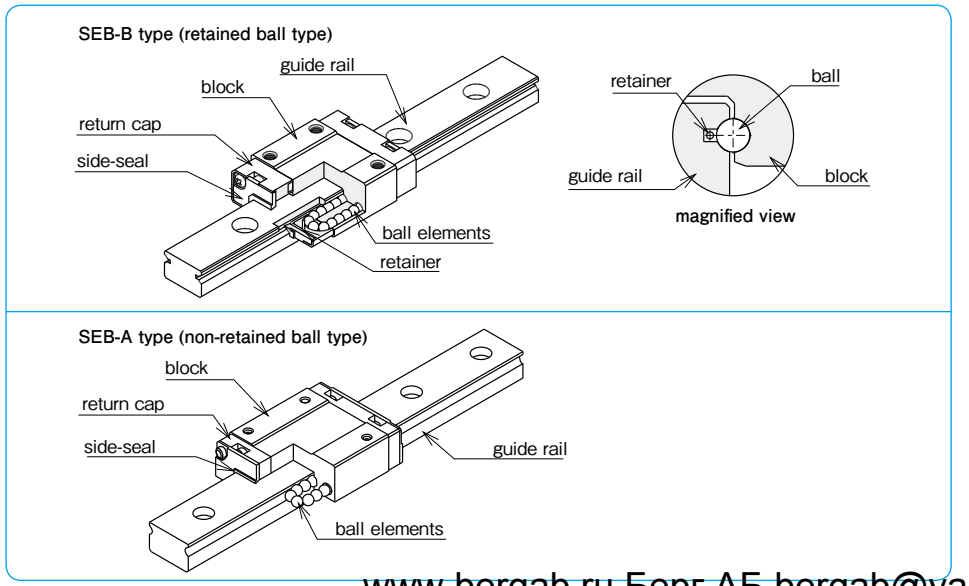

TYPES

The SEB(S) type slide guides are categorized according to their block shape and the rail installation method.

Table A-5 Type

		standard block standard type rail (counterbore)	long block standard type rail (counterbore)	standard block N type rail (tapped hole)	long block N type rail (tapped hole)
retained ball type		SEBS-B type P.A-26	SEBS-BY type P.A-26	SEBS-B-N type P.A-26	SEBS-BY-N type P.A-26
retained ball type	all stainless steel	SEBS-BM type P.A-26	SEBS-BYM type P.A-26	SEBS-BM-N type P.A-26	SEBS-BYM-N type P.A-26
retained ball type	wide type	SEBS-WB type P.A-28	SEBS-WBY type P.A-28	SEBS-WB-N type P.A-28	SEBS-WBY-N type P.A-28
non-retained ball type		SEB-A type P.A-30	SEB-AY type P.A-30	SEB-A-N type P.A-30	SEB-AY-N type P.A-30
non-retained ball type	wide type	SEB-WA type P.A-32	SEB-WAY type P.A-32	SEB-WA-N type P.A-32	SEB-WAY-N type P.A-32

www.bergab.ru Берг АБ bergab@ya.ru Тел. (495)-228-06-21, факс (495) 223-3071

www.bergab.ru Берг АБ bergab@ya.ru Тел. (495)-228-06-21, факс (495) 223-3071

ACCURACY

The SEB(S) slide guides are available in two grades of accuracy: high grade and precision grade (P).

Table A-6 Accuracy unit／mm

accuracy grade	high	precision
accuracy symbol	blank	P
allowable dimensional difference in height H	±0.020	±0.010
paired difference for height H	0.015	0.007
allowable dimensional difference in width W	±0.025	±0.015
paired difference for width W	0.020	0.010
running parallelism of surface C to surface A	refer to figure A-36,37	
running parallelism of surface D to surface B		

Figure A-36 Accuracy

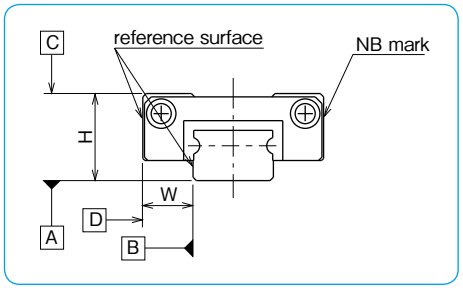

Figure A-37 Motion Accuracy

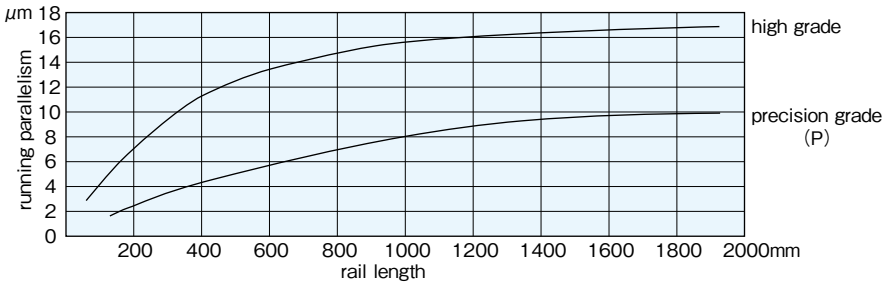

PRELOAD

SEB(S) slide guides are available with a standard preload (blank), light preload (T1), and a positive-clearance (T0).

Table A-7 Preload Symbol and Radial Clearance unit／μm

size	preload and symbol: clearance T0	standard blank	light T1
2	+1～+3	–	–
3			
5		–1～0	
7	+3～+6	–3～0	–4～–2
9			
12			
15	+4～+8		–7～–3
20			
3W	+1～+3	–	–
5W		–1～0	–
7W	+3～+6	–3～0	–4～–2
9W			
12W			
15W	+4～+8		–7～–3

Table A-8 Operating Conditions and Preload

preload	symbol	operating conditions
clearance	T0	light motion is required. installation errors to be absorbed.
standard	blank	minute vibration is applied. accurate motion is required. moment is applied in a given direction.
light	T1	light vibration is applied. light torsional load is applied. moment is applied.

LOAD RATING

The load rating for SEB(S) slide guides depends on the direction of load.

Table A-9 Load Rating

		ratained ball type	non-retained ball type
basic dynamic load rating	vertical	1.00×C	1.00×C
	horizontal	0.89×C	1.13×C
basic static load rating	vertical	1.00×Co	1.00×Co
	horizontal	0.84×Co	1.19×Co

Figure A-38 Direction of Load

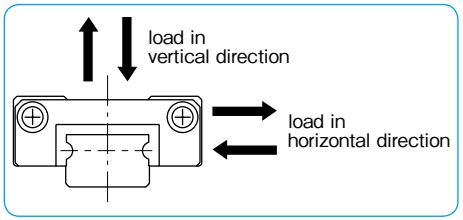

EQUIVALENT LOAD

For a guide to which vertical load and horizontal load are applied at the same time, calculate its static equivalent load using the following equation.

$$P = Pa + X \cdot Ps$$

P: equivalent load Pa: vertical load Ps: horizontal load
X: 0.84 for SEB-A type; 1.19 for SEBS-B type

RAIL LENGTH

Slide guides with most commonly used lengths are available as standard. For slide guides with a non-standard length, unless otherwise specified, the distance from one end of the rail to the first hole center (N) will be within the ranges listed in Tables A-10 and A-11, satisfying the following equation.

$$L = M \cdot P + 2N$$

L: length (mm) M: number of pitches P: hole pitch (mm)
N: distance from the end of the rail to the first hole center (mm)

Figure A-39 Rail

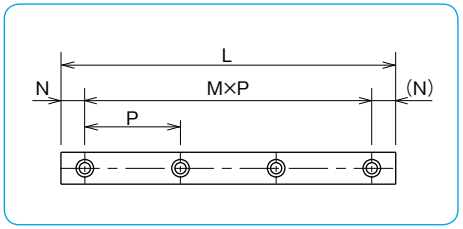

Table A-10 N Dimension (standard type) unit/mm

size	N: and over	less than
2	3	7
3		8
5		10.5
7		
9	4	14
12		16.5
15		24
20	6	36

Table A-11 N Dimension (wide type) unit/mm

size	N: and over	less than
3W	3	10.5
5W	4	14
7W		19
9W		
12W	5	25
15W		

www.bergab.ru Берг АБ bergab@ya.ru Тел. (495)-228-06-21, факс (495) 223-3071

www.bergab.ru Берг АБ bergab@ya.ru Тел. (495)-228-06-21, факс (495) 223-3071

MOUNTING

Mounting Surface Profile

Slide guides are mounted by pushing the reference surface of the rail and the block against the shoulder provided on the mounting surface. An escape groove or a radius corner should be provided at the corner of the shoulder to prevent interference. The recommended shoulder height values on the mounting reference surface are shown in Table A-12. (Table A-13 for corner radius)

Figure A-40 Mounting Surface Profile-1

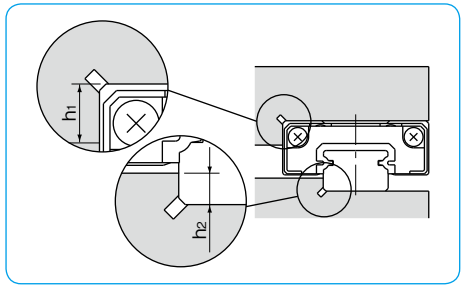

Figure A-41 Mounting Surface Profile-2

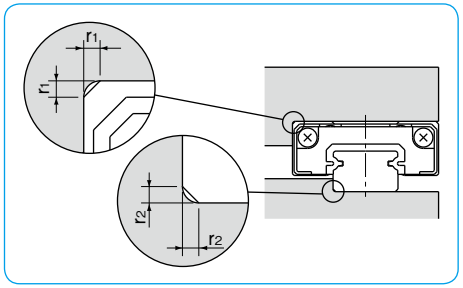

Table A-12 Shoulder Height on the Mounting Reference Surface

unit／mm

size	shoulder height on the block side h_1	shoulder height on the rail side h_2
2	1	0.5
3	1.2	0.8
5	2	1
7	2.5	
9	3	1.5
12	4	2
15	5	3.5
20		5
3W	1.5	0.8
5W	2	1
7W	3	1.5
9W		2.5
12W	4	
15W	5	

Table A-13 Maximum Corner Radius Values

unit／mm

size	block mounting part r_1	rail mounting part r_2
2	0.1	0.1
3	0.15	
5	0.3	0.3
7		
9		
12		
15		
20		0.5
3W	0.15	0.1
5W	0.3	0.3
7W		
9W		
12W		
15W		

Recommended Torque Values

The screws to fasten the rail should be tightened to an equal torque using a torque wrench in order to secure the motion accuracy. The recommended torque values are given in Tables A-14. Please adjust the torque depending on the operating conditions.

Table A-14 Recommended Torque

unit／N・m

size	M1	M1.4	M1.6	M2	M2.6	M3	M4	M5	M6
recommended torque	0.03	0.10	0.15	0.3	0.65	1.0	2.3	4.7	8.0

(for stainless steel screw A2-70)

MOUNTING SCREW

Extremely small custom screws are available from NB.

Table A-15 Mounting Screw (stainless steel)

unit／mm

type	shape	size	D mm	H mm	pitch mm	ℓ mm
custom screw	Figure A-42①	M1	1.8	0.45	0.25	3, 4, 5
		M1.4	2.5	0.8	0.3	2.5, 3, 4
		M1.6	2.3	0.5	0.35	4, 5, 6
		M2	3	0.6	0.4	6
cap screw	Figure A-42②	M2	3.8	2	0.4	4, 5, 6, 8, 10
		M2.6	4.5	2.6	0.45	4, 5, 6, 8, 10

Figure A-42 Mounting Screw

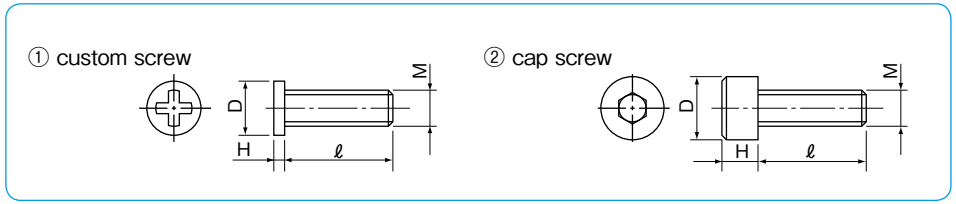

LUBRICATION

A high grade lithium soap based grease is applied to the NB slide guides prior to shipment for immediate use.
Please relubricate with a similar type of grease periodically depending on the operating conditions.
For use in clean rooms or vacuum environments, NB slide guides without grease are available upon request.
Please contact NB for customer specified grease types.

A special syringe lubricant dispenser (refer to Figure A-43) is available from NB as an option. In particular, the SEBS-B retained ball type has a special structure that allows the user to replenish lubricant easily (patented), as the magnified view of Figure A-43 shows.
Please refer to page Eng-39 for details on the low dust generation grease.

Figure A-43 Greasing Method

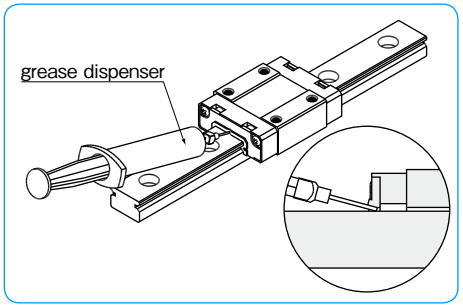

www.bergab.ru Берг АБ bergab@ya.ru Тел. (495)-228-06-21, факс (495) 223-3071

www.bergab.ru Берг АБ bergab@ya.ru Тел. (495)-228-06-21, факс (495) 223-3071

SEBS-B/SEBS-BY TYPE
SEBS-BM/SEBS-BYM TYPE

– Retained Ball Type –

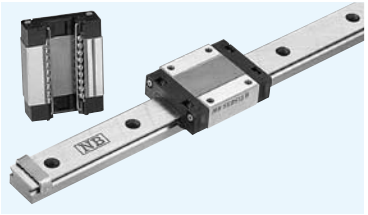

part number structure

example **SEBS 15B Y M UU 2 T1 -589 N P /W2**

- **SEBS**: anti-corrosion
- size
- block — **blank**: standard; **Y**: long
- return cap — **blank**: resin; **M**: stainless steel
- seal — **blank**: without side-seal; **UU**: with side-seals
- number of blocks attached to one rail
- preload symbol — **TO**: clearance; **blank**: standard; **T1**: light
- total length of rail
- rail mounting hole — **blank**: counterbore; **N**: tapped hole
- accuracy grade — **blank**: high; **P**: precision
- symbol for number of axes※ — **blank**: single axis; **W2**: 2 parallel axes; **W3**: 3parallel axes

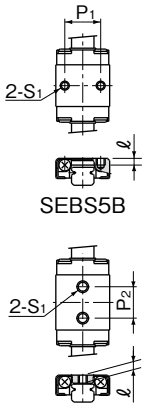

※ The symbol for the number of axes does not mean the number of rails ordered.

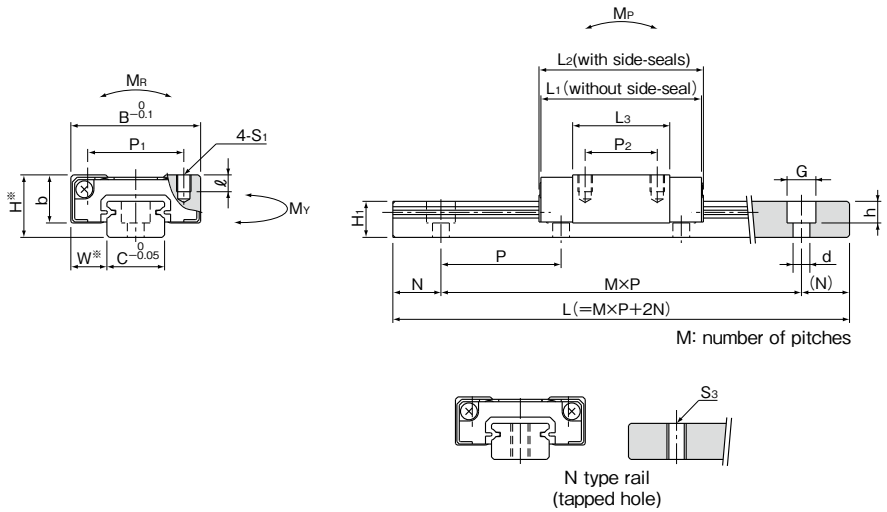

※Please refer to page A-22 for accuracy.

part number resin return cap	part number stainless return cap	assembly dimensions H mm	assembly dimensions W mm	B mm	L1 mm	L2 mm	P1 mm	P2 mm	S1	ℓ mm	L3 mm	b mm
SEBS 5B	SEBS 5BM	6	3.5	12	16.5	16.9	8	—	M2	1.5	9.3	4.5
SEBS 5BY	SEBS 5BYM				19.5	19.9	—	7	M2.6	1.8	12.3	
SEBS 7B	SEBS 7BM	8	5	17	23	23	12	8	M2	2.5	12.8	6.5
SEBS 7BY	SEBS 7BYM				32.5	32.5		13			22.3	
SEBS 9B	SEBS 9BM	10	5.5	20	30.8	30.8	15	10	M3	3	19.6	7.8
SEBS 9BY	SEBS 9BYM				40.3	40.3		16			29.1	
SEBS12B	SEBS12BM	13	7.5	27	33.8	34.2	20	15		3.5	20.2	10
SEBS12BY	SEBS12BYM				45.7	46.1		20			32.1	
SEBS15B	SEBS15BM	16	8.5	32	42.6	43	25	20		4	27.6	12
SEBS15BY	SEBS15BYM				58.6	59		25			43.6	
SEBS20B	SEBS20BM	25	13	46	65.9	65.9	38	38	M4	6	44.7	17.5
SEBS20BY	SEBS20BYM				85.7	85.7					64.5	

guide rail dimensions H1 mm	C mm	d×G×h mm	S3	N mm	P mm	basic load rating dynamic C kN	static Co kN	allowable static moment MP N・m	MY N・m	MR N・m	mass block g resin return cap	stainless return cap	guide rail g/100mm	block size
4	5	2.4×3.5×0.8	M2.6	5	15	0.52	0.76	1.14	0.96	1.97	3	4	13	5B
						0.64	1.01	1.95	1.64	2.62	4	5		5BY
4.7	7	2.4×4.2×2.3	M3			1.29	1.69	3.66	3.07	6.18	9	12	21	7B
						1.90	2.96	10.42	8.74	10.82	15	18		7BY
5.5	9	3.5×6×3.5	M4	7.5	20	1.71	2.54	7.78	6.53	11.81	18	22	31	9B
						2.27	3.80	16.84	14.13	17.71	27	31		9BY
7.5	12	3.5×6×4.5		10	25	3.10	3.83	12.43	10.43	23.91	35	44	59	12B
						4.35	6.22	30.73	25.78	38.85	53	62		12BY
9.5	15		M5	15	40	5.66	6.76	29.29	24.58	52.41	64	77	97	15B
						7.94	10.99	72.43	60.78	85.16	98	110		15BY
15	20	6×9.5×8.5	M6	20	60	11.45	14.58	103.69	87.00	149.50	228	266	205	20B
						14.88	21.21	210.80	176.88	217.45	323	360		20BY

1kN≒102kgf 1N・m≒0.102kgf・m

part number	standard rail length L mm															
SEBS 5B	40	55	70	85	100	115	130	145	160							
SEBS 7B	40	55	70	85	100	115	130	145	160	175	190	205	220	235	250	265
SEBS 9B	55	75	95	115	135	155	175	195	215	235	255	275	295	315	335	355
SEBS12B	70	95	120	145	170	195	220	245	270	295	320	345	370	395	420	445
SEBS15B	70	110	150	190	230	270	310	350	390	430	470	510	550	590	630	670
SEBS20B	220	280	340	400	460	520	580	640	700	760	820	880	940	1,000		

Rails exceeding the maximum specified length may be fabricated if joints are used. Please contact NB for assistance.

							maximum length mm counterbore	tapped hole (N type)
							600	300
280	295	310					1,000	700
375	395	415	435	455	475		1,300	1,000
470	495							

SEBS5 rail mounting screw

SEBS5 counterbore type rails are provided with custom screws for mounting.

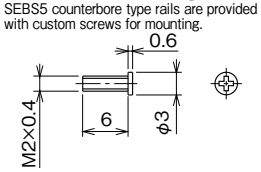

www.bergab.ru Берг АБ bergab@ya.ru Тел. (495)-228-06-21, факс (495) 223-3071

www.bergab.ru Берг АБ bergab@ya.ru Тел. (495)-228-06-21, факс (495) 223-3071

SEBS-WB/SEBS-WBY TYPE

– Retained Ball · Wide Type –

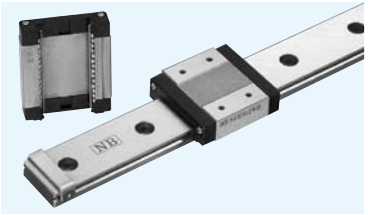

part number structure

example **SEBS 15WB Y UU 2 T1 - 589 N P / W2**

- SEBS: anti-corrosion
- size
- block: blank: standard; Y: long
- seal: blank: without side-seal; UU: with side-seals
- number of blocks attached to one rail
- preload symbol: TO: clearance; blank: standard; T1: light
- total length of rail
- rail mounting hole: blank: counterbore; N: tapped hole
- accuracy grade: blank: high; P: precision
- symbol for number of axes※: blank: single axis; W2: 2 parallel axes; W3: 3 parallel axes

※ The symbol for the number of axes does not mean the number of rails ordered.

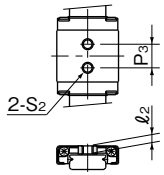

SEBS 5WB／5WBY

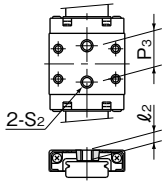

SEBS 7WB／7WBY

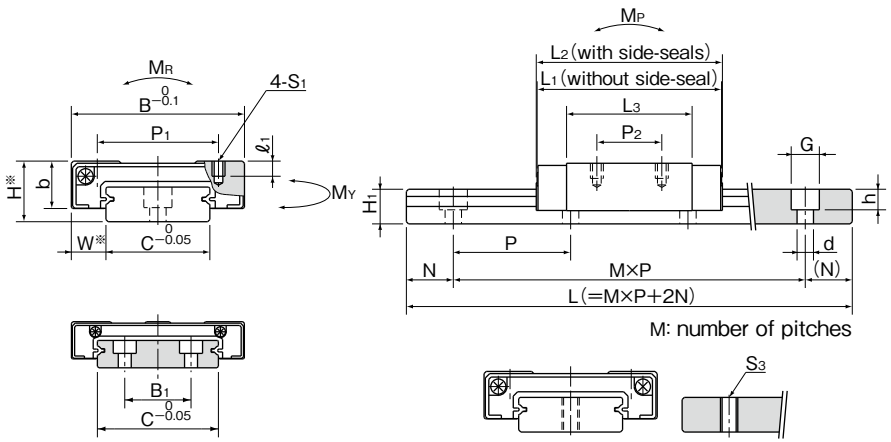

SEBS15WB／15WBY

N type rail (tapped hole)

※Please refer to page A-22 for accuracy.

part number	assembly dimensions H mm	W mm	block dimensions B mm	L1 mm	L2 mm	P1 mm	P2 mm	S1	ℓ1 mm	L3 mm	P3 mm	S2	ℓ2 mm	b mm
SEBS 5WB	6.5	3.5	17	21.3	21.7	—	—	—	—	14.3	6.5	M3	2.3	5
SEBS 5WBY				27.3	27.7					20.3	11			
SEBS 7WB	9	5.5	25	31.4	31.4	19	10	M3	2.8	20.2	12	M4	3.5	7
SEBS 7WBY				40.1	40.1		19			28.9	18			
SEBS 9WB	12	6	30	38.5	38.5	21	12			26.3	—	—	—	9
SEBS 9WBY				50.5	50.5	23	24		3	38.3				
SEBS12WB	14	8	40	42.6	43	28	15		3.6	29	—	—	—	11
SEBS12WBY				58.1	58.5		28			44.5				
SEBS15WB	16	9	60	54.2	54.6	45	20	M4	4.5	38.8	—	—	—	13
SEBS15WBY				73.3	73.7		35			57.9				

guide rail dimensions H1 mm	C mm	B1 mm	d×G×h mm	S3	N mm	P mm	basic load rating dynamic C kN	static Co kN	allowable static moment MP N·m	MY N·m	MR N·m	mass block g	guide rail g/100mm	block size
4	10	—	3×5.5×3	M3	5	20	0.71	1.18	2.61	2.19	6.00	7	26	5WB
							0.91	1.68	5.17	4.33	8.57	10		5WBY
5.2	14	—	3.5×6×3.2	M4	10	30	1.71	2.54	7.78	6.53	18.15	20	51	7WB
							2.27	3.80	16.84	14.13	27.22	28		7WBY
7.5	18	—	3.5×6×4.5				2.97	4.37	18.14	15.22	40.41	37	96	9WB
							3.87	6.38	37.43	31.41	59.05	52		9WBY
8	24	—	4.5×8×4.5	M5	15	40	4.11	5.74	26.42	22.16	70.29	71	137	12WB
							5.46	8.61	57.16	47.96	105.44	106		12WBY
9.5	42	23					7.50	10.14	62.27	52.25	215.53	148	286	15WB
							9.95	15.21	134.73	113.05	323.30	216		15WBY

1kN≒102kgf 1N·m≒0.102kgf·m

part number	standard rail length L mm														
SEBS 5WB	50	70	90	110	130	150	170	190							
SEBS 7WB	50	80	110	140	170	200	230	260	290	320	350	380	410	440	470
SEBS 9WB	50	80	110	140	170	200	230	260	290	320	350	380	410	440	470
SEBS12WB	70	110	150	190	230	270	310	350	390	430	470	510	550	590	630
SEBS15WB	70	110	150	190	230	270	310	350	390	430	470	510	550	590	630

Rails exceeding the maximum specified length may be fabricated if joints are used. Please contact NB for assistance.
The minimum standard rail can not be used for SEBS 9 WBY and SEBS 15 WBY.

							maximum length mm counterbore	tapped hole (N type)
							600	500
							1,000	700
500	530						1,300	1,000
670	710							
670	710	750	790	830	870			

www.bergab.ru Берг АБ bergab@ya.ru Тел. (495)-228-06-21, факс (495) 223-3071

www.bergab.ru Берг АБ bergab@ya.ru Тел. (495)-228-06-21, факс (495) 223-3071

SEB-A/AY TYPE

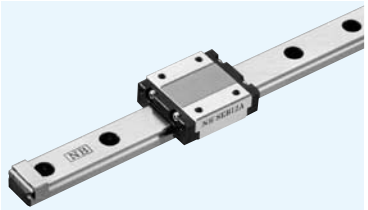

part number structure

example **SEBS 15A Y UU 2 T1 - 589 N P / W2**

- specification
  - SEB: standard
  - SEBS: anti-corrosion
- size
- block
  - blank: standard
  - Y: long
- seal
  - blank: without side-seal
  - UU: with side-seals
- number of blocks attached to one rail
- preload symbol
  - TO: clearance
  - blank: standard
  - T1: light
- total length of rail
- rail mounting hole
  - blank: counterbore
  - N: tapped hole
- accuracy grade
  - blank: high
  - P: precision
- symbol for number of axes※
  - blank: single axis
  - W2: 2 parallel axes
  - W3: 3 parallel axes

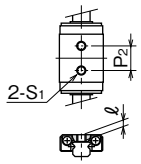

SEBS 2A/3A/3AY/5AY

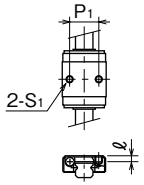

SEBS 5A

※ The symbol for the number of axes does not mean the number of rails ordered.

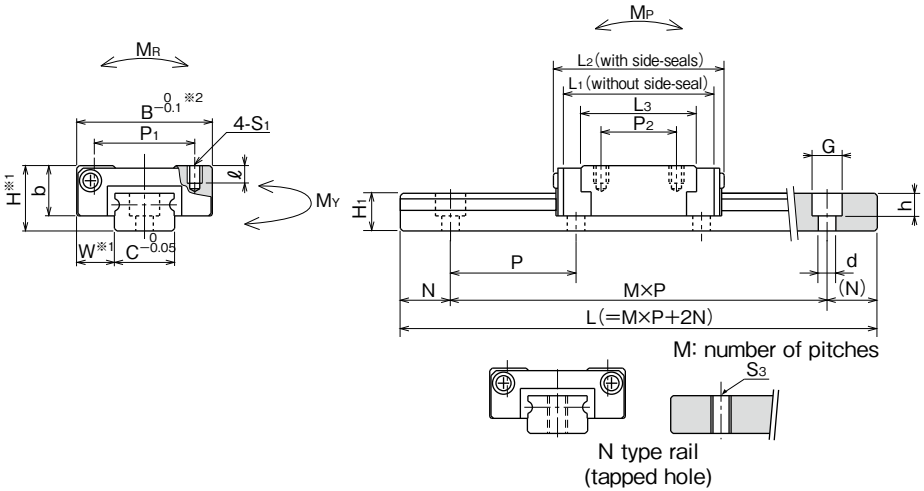

※Please refer to page A-22 for accuracy.
B 0 -0.05 only for SEBS 2A, 3A and 3AY.

part number standard	part number anti-corrosion	assembly dimensions H mm	assembly dimensions W mm	block dimensions B mm	L1 mm	L2 mm	P1 mm	P2 mm	S1	ℓ mm	L3 mm	b mm
—	SEBS 2A	3.2	2	6	12.9	14.3	—	4	M1.4	1.05	9.3	2.5
—	SEBS 3A	4	2.5	8	10.5	11.8	—	3.5	M1.6	1.3	6.5	3
	SEBS 3AY				14.5	15.8	—	5.5	M2		10.5	
—	SEBS 5A	6	3.5	12	15.6	17	8	—	M2	1.5	9.8	4.5
	SEBS 5AY				19.2	20.6	—	7	M2.6	1.8	13.4	
—	SEBS 7A	8	5	17	21.9	24	12	8	M2	2.5	15.1	6.5
	SEBS 7AY				31	33		13			24.6	
SEB 9A	SEBS 9A	10	5.5	20	28.1	29.5	15	10	M3	3	20.4	7.8
SEB 9AY	SEBS 9AY				38.1	40		16			30.4	
SEB12A	SEBS12A	13	7.5	27	30	33.5	20	15		3.5	22.8	10
SEB12AY	SEBS12AY				42	45.5		20			34.7	
SEB15A	SEBS15A	16	8.5	32	38.5	42	25	20		4	29.5	12
SEB15AY	SEBS15AY				54.5	58		25			45.4	
SEB20A	SEBS20A	25	13	46	55.7	61	38	38	M4	6	45.7	17.5
SEB20AY	SEBS20AY				79.5	85					69.5	

part number standard	part number anti-corrosion	H1 mm	C mm	S3	d×G×h mm	N mm	P mm	basic load rating dynamic C kN	basic load rating static Co kN	allowable static moment MP N・m	MY N・m	MR N・m	mass block g	mass guide rail g/100mm	block size
—	SEBS 2A	2	2	M1	—	4	8	0.21	0.38	0.53	0.64	0.41	0.8	2.8	2A
—	SEBS 3A	2.6	3	M1.6	—	5	10	0.25	0.36	0.39	0.46	0.57	1	5	3A
	SEBS 3AY							0.35	0.58	0.97	1.16	0.93	2		3AY
—	SEBS 5A	4	5	M2.6	2.4×3.5×1	5	15	0.59	0.81	1.32	1.58	2.11	4	13	5A
	SEBS 5AY							0.74	1.11	2.39	2.86	2.90	5		5AY
—	SEBS 7A	4.7	7	M3	2.4×4.2×2.3			1.08	1.41	3.07	3.66	5.18	11	21	7A
	SEBS 7AY							1.59	2.48	8.74	10.4	9.07	16		7AY
SEB 9A	SEBS 9A	5.5	9	M4	3.5×6×3.5	7.5	20	1.92	2.53	7.64	9.11	11.5	19	30	9A
SEB 9AY	SEBS 9AY							2.62	3.94	17.5	20.8	17.9	28		9AY
SEB12A	SEBS12A	7.5	12		3.5×6×4.5	10	25	2.60	3.20	10.4	12.4	20.0	37	60	12A
SEB12AY	SEBS12AY							3.65	5.21	25.7	30.7	32.6	55		12AY
SEB15A	SEBS15A	9.5	15	M5		15	40	4.74	5.67	24.5	29.2	43.9	68	100	15A
SEB15AY	SEBS15AY							6.65	9.22	60.7	72.4	71.4	101		15AY
SEB20A	SEBS20A	15	20	M6	6×9.5×8.5	20	60	8.99	11.1	72.7	86.7	114	226	209	20A
SEB20AY	SEBS20AY							12.4	17.8	176	210	182	338		20AY

1kN≒102kgf 1N・m≒0.102kgf・m

part number standard	part number anti-corrosion	standard rail length L mm														
—	SEBS 2A	32	40	56	80	104										
—	SEBS 3A	30	40	60	80	100										
—	SEBS 5A	40	55	70	85	100	115	130	145	160						
—	SEBS 7A	40	55	70	85	100	115	130	145	160	175	190	205	220	235	250
SEB 9A	SEBS 9A	55	75	95	115	135	155	175	195	215	235	255	275	295	315	335
SEB12A	SEBS12A	70	95	120	145	170	195	220	245	270	295	320	345	370	395	420
SEB15A	SEBS15A	70	110	150	190	230	270	310	350	390	430	470	510	550	590	630
SEB20A	SEBS20A	220	280	340	400	460	520	580	640	700	760	820	880	940	1,000	

Joint rails are used when the required length exceeds the maximum standard length listed in the dimension tables.
Please contact NB for details. Only N type rail is available for SEBS2A and SEBS 5A.

265	280	295	310																					
355	375	395	415	435	455	475																		
445	470	495																						
670																								

maximum length mm counterbore standard	counterbore anti-corrosion	tapped hole (N type) standard	tapped hole (N type) anti-corrosion
–	–	–	150
–	–	–	150
–	600	–	300
–	1,000	–	700
500	1,300	500	1,000
1,900		1,900	

SEBS5 rail mounting screw

SEBS5 counterbore type rails are provided with custom screws for mounting.

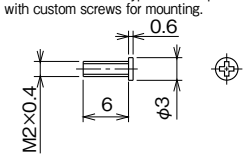

www.bergab.ru Берг АБ bergab@ya.ru Тел. (495)-228-06-21, факс (495) 223-3071

www.bergab.ru Берг АБ bergab@ya.ru Тел. (495)-228-06-21, факс (495) 223-3071

SEB-WA/SEB-WAY TYPE

— Wide Type —

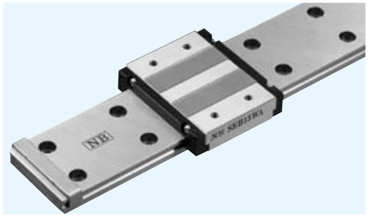

part number structure

example SEBS 15WA Y UU 2 T1 -589 N P /W2

- specification
  SEB: standard
  SEBS: anti-corrosion
- size
- block
  blank: standard
  Y: long
- seal
  blank: without side-seal
  UU: with side-seals
- number of blocks attached to one rail
- preload symbol
  T0: clearance
  blank: standard
  T1: light
- total length of rail
- rail mounting hole
  blank: counterbore
  N: tapped hole
- accuracy grade
  blank: high
  P: precision
- symbol for number of axes※
  blank: single axis
  W2: 2 parallel axes
  W3: 3 parallel axes

※ The symbol for the number of axes does not mean the number of rails ordered.

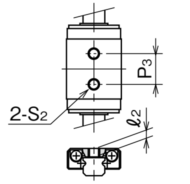

SEBS 3WA/3WAY

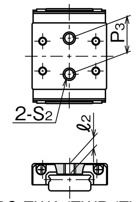

SEBS 7WA/7WD/7WAY

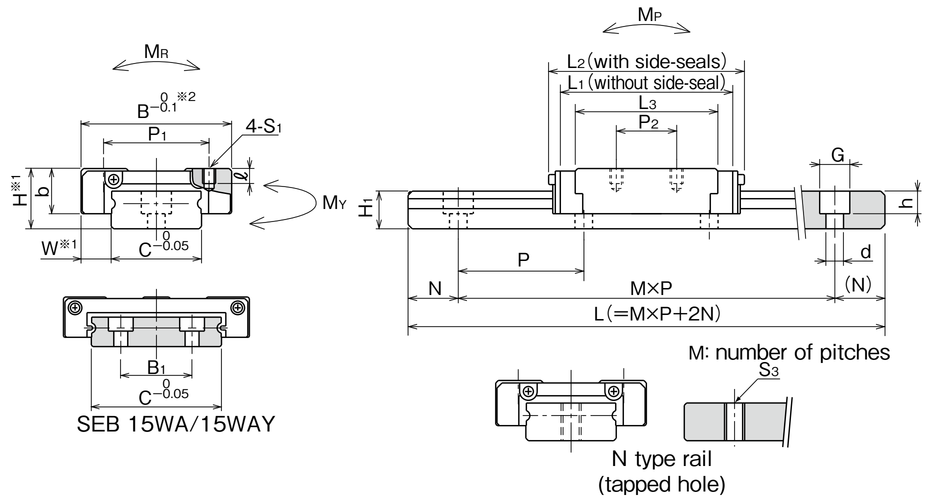

※Please refer to page A-22 for accuracy.
B -0.05 0 only for SEBS 3WA and 3WAY

part number standard	part number anti-corrosion	assembly dimensions H mm	W mm	block dimensions B mm	L1 mm	L2 mm	P1 mm	P2 mm	S1	ℓ mm	L3 mm	P3 mm	S2	ℓ2 mm	b mm
—	SEBS 3WA	4.5	3	12	14.2	15	—	—	—	—	9.7	4.5	M2	1.7	3.5
	SEBS 3WAY				19	19.8					14.5	8			
—	SEBS 7WA	9	5.5	25	30.1	32	18	12	M2.6	2.5	22.1	12	M4	3.5	7
	SEBS 7WD						19	10	M3	2.8					
	SEBS 7WAY				39.6	41		19			31.6	18			
SEB 9WA	SEBS 9WA	12	6	30	35.9	38	21	12	M2.6	3	28.4	—	—	—	9
SEB 9WD	SEBS 9WD								M3	2.8					
SEB 9WAY	SEBS 9WAY				48	50	23	24		3	40.4				
SEB12WA	SEBS12WA	14	8	40	40.7	44	28	15		3.5	33.5	—	—	—	11
SEB12WAY	SEBS12WAY				55	58.5		28			47.8				
SEB15WA	SEBS15WA	16	9	60	51.2	55	45	20	M4	4.5	42	—	—	—	13
SEB15WAY	SEBS15WAY				70.5	74		35			61.1				

guide rail dimensions H1 mm	C mm	B1 mm	S3	d×G×h mm	N mm	P mm	basic load rating dynamic C kN	static Co kN	allowable static moment MP N・m	MY N・m	MR N・m	mass block g	guide rail g/100mm	block size
2.6	6	—	M3	2.4×4×1.5	5	15	0.33	0.54	0.83	0.99	1.67	3	10	3WA
							0.44	0.81	1.81	2.15	2.51	4		3WAY
5.2	14	—	M4	3.5×6×3.2	10	30	1.43	2.12	6.53	7.78	15.2	21	51	7WA
														7WD
							1.90	3.19	14.1	16.8	22.8	30		7WAY
7.5	18	—		3.5×6×4.5			2.49	3.66	15.2	18.1	33.9	38	96	9WA
														9WD
							3.25	5.35	31.4	37.4	49.5	55		9WAY
8	24	—	M5	4.5×8×4.5	15	40	3.64	5.21	25.7	30.7	63.8	77	138	12WA
							4.75	7.62	53.2	63.4	93.3	109		12WAY
9.5	42	23					6.29	8.51	52.2	62.2	180	154	294	15WA
							8.35	12.7	113	134	271	222		15WAY

1kN≒102kgf 1N・m≒0.102kgf・m

part number standard	part number anti-corrosion	standard rail length L mm																					maximum length mm counterbore standard	counterbore anti-corrosion	tapped hole (N type) standard	tapped hole (N type) anti-corrosion
—	SEBS 3WA	40	55	70	85	100																	—	500	—	150
—	SEBS 7WA	50	80	110	140	170	200	230	260	290	320	350	380	410	440	470							—	1,000	—	700
SEB 9WA	SEBS 9WA	50	80	110	140	170	200	230	260	290	320	350	380	410	440	470	500	530					1,900	1,300	1,900	1,000
SEB12WA	SEBS12WA	70	110	150	190	230	270	310	350	390	430	470	510	550	590	630	670	710								
SEB15WA	SEBS15WA	70	110	150	190	230	270	310	350	390	430	470	510	550	590	630	670	710	750	790	830	870				

SEBS3WA/3WAY rail mounting screw

SEBS3WA/3WAY counterbore type rails are provided with custom screws for mounting.

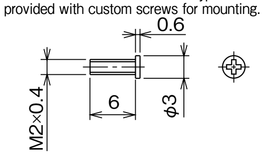

Joint rails are used when the required length exceeds the maximum standard length listed in the dimension tables.
Please contact NB for details. SEB9WAY and SEB15WAY block lengths exceed the minimum standard rail length.

www.bergab.ru Берг АБ bergab@ya.ru Тел. (495)-228-06-21, факс (495) 223-3071

www.bergab.ru Берг АБ bergab@ya.ru Тел. (495)-228-06-21, факс (495) 223-3071

SLIDE GUIDE Miniature SER Type

The NB slide guide SER type is a linear motion bearing utilizing the rotational motion of precision rollers placed in two rows. Despite its compactness, it can be used in various applications requiring high load capacity.

STRUCTURE AND ADVANTAGES

The SER type slide guide consists of a rail with two precision-machined raceway grooves and a block assembly. The block assembly consists of the main body, rollers, and bottom retainers. All of these components are made of metallic materials.

High Load Capacity and Long Life

Since roller elements are used, the contact surface is large which provides a high load capacity and a long travel life.

Compactness

Since a cross roller method is utilized, only two raceway grooves are necessary and presents a very compact package.

Moment Resistant Type

The wide block design (WA type) has an extremely high moment loading capacity. This will allow for single guide designs in the most demanding and compact applications.

Tapped Hole Rail Type

For the SER rails, counterbore (standard) and optional tapped hole (N) types are available enabling various installation methods.

All Stainless Steel Type

The SERS type slide guide is made of all stainless steel components, making it ideal for high temperature, clean room or vacuum applications.

Figure A-44 Structure of SER type Slide Guide

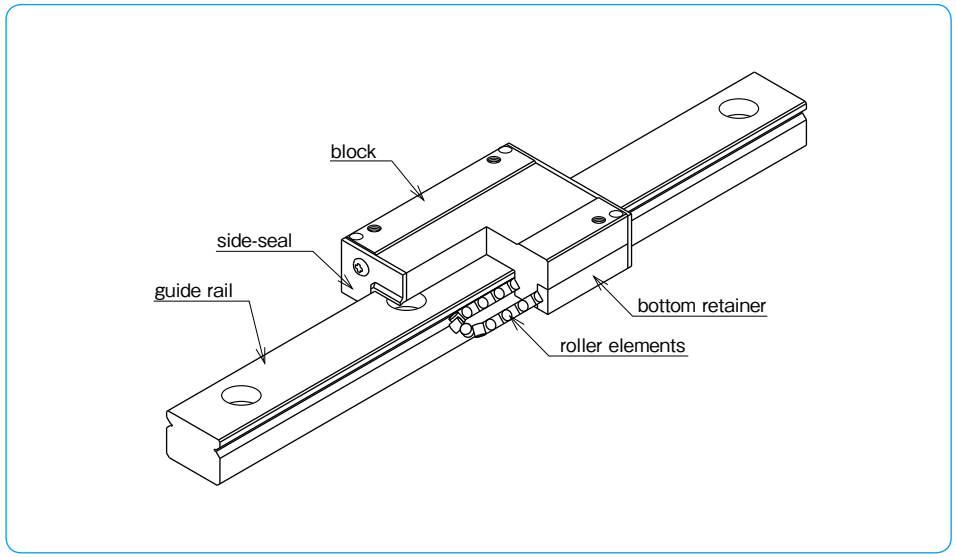

TYPES

The SER type slide guides are available with a standard block or a wide block (WA) configuration. Each type can be selected with standard rails of counterbore holes or the optional N-Type rails of tapped holes. For anti-corrosion, all stainless steel type is also available with all stainless steel components.

SER-A type

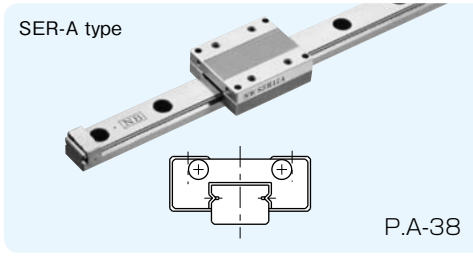

P.A-38

SER-WA type

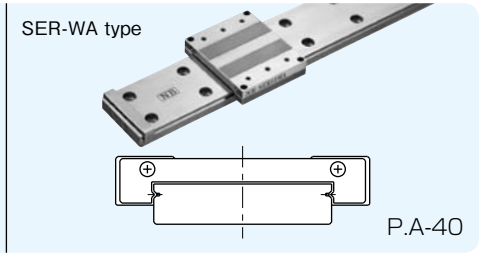

P.A-40

ACCURACY

The SER-type slide guides are available with high grade accuracy (blank) or precision grade accuracy (P).

Table A-16 Accuracy unit／mm

accuracy grade	high	precision
accuracy symbol	blank	P
allowable dimensional difference in height H	±0.015	±0.008
paired difference for height H	0.015	0.007
allowable dimensional difference in width W	±0.020	±0.010
paired difference for width W	0.020	0.010
Running parallelism of surface C to surface A	refer to Figure A-45,46	
Running parallelism of surface D to surface B		

Figure A-45 Accuracy

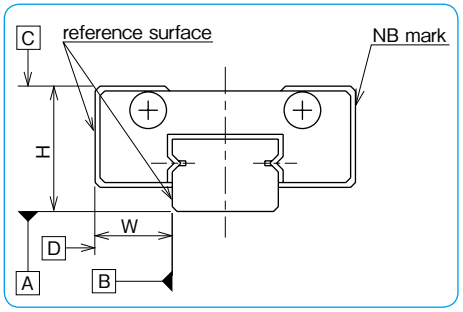

Figure A-46 Motion Accuracy

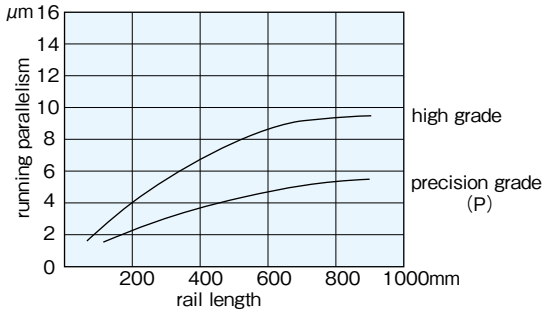

www.bergab.ru Берг АБ bergab@ya.ru Тел. (495)-228-06-21, факс (495) 223-3071

www.bergab.ru Берг АБ bergab@ya.ru Тел. (495)-228-06-21, факс (495) 223-3071

PRELOAD

The SER(S) type slide guides are available only with a standard (0 to slightly negative clearance) preload.

RAIL LENGTH

Slide guides with most commonly used lengths are available as standard. For slide guides with a non-standard length, unless otherwise specified, the distance from one end of the rail to the first hole center (N) will be within the ranges listed in Tables A-17 and A-18, satisfying the following equation.

$$L=M\cdot P+2N$$

L: length (mm)
N: distance from the end of the rail to the first hole center (mm)
P: hole pitch (mm) M: number of pitches

Figure A-47 Rail

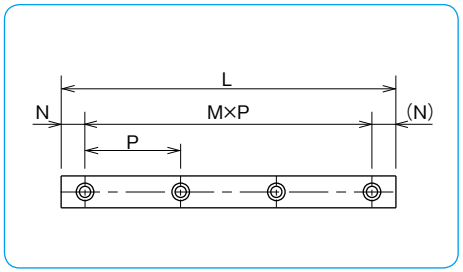

Table A-17 N Dimension (standard type) unit／mm

part number		N		L max.
standard	anti-corrosion	and over	less than	
SER 9A	SERS 9A	4	14	275
SER12A	SERS12A		16.5	470
SER15A	SERS15A		24	670
SER20A	SERS20A	6	36	880

Table A-18 N Dimension (wide type) unit／mm

part number		N		L max.
standard	anti-corrosion	and over	less than	
SER 9WA	SERS 9WA	4	19	290
SER12WA	SERS12WA	5	25	470
SER15WA	SERS15WA			670

MOUNTING

Mounting Surface Profile

Slide guides are mounted by pushing the reference surface of the rail and the block against the shoulder provided on the mounting surface. An escape groove or a radius corner should be provided at the corner of the shoulder, as shown in Figs.A-48 and A-49, to prevent interference. The recommended shoulder height and corner radis are shown in Table A-19 and Table A-20 respectively.

Figure A-48 Mounting Reference Surface Profile-1

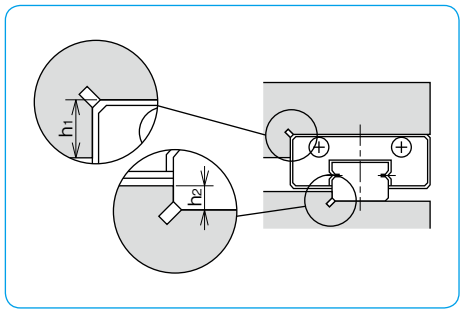

Table A-19 Shoulder Height Dimensions unit／mm

part number	shoulder height on the block side h_1	shoulder height on the rail side h_2
SER 9A	3	1.5
SER12A	4	2
SER15A	5	3.5
SER20A		5
SER 9WA	3	2.5
SER12WA	4	
SER15WA	5	

Figure A-49 Mounting Reference Surface Profile-2

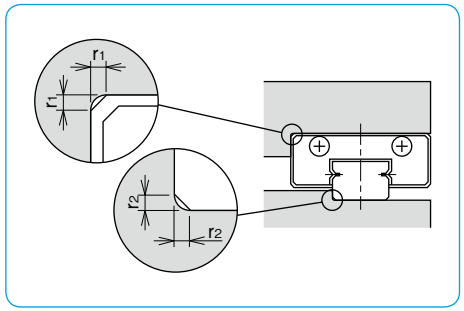

Recommended Torque Values

The screws to fasten the rail should be tightened to an equal toque using a torque wrench in order to secure the motion accuracy. The recommended torque values are given in Table A-21. Please adjust the torque depending on the operating conditions.

Table A-20 Maximum Corner Radius Values unit／mm

part number	block mounting part r_1	rail mounting part r_2
SER 9A	0.3	0.1
SER12A		0.3
SER15A		
SER20A		0.5
SER 9WA		0.3
SER12WA		
SER15WA		

Table A-21 Recommended Torque unit／N・m

size	M2	M3	M4	M5	M6
recommended torque	0.3	1.0	2.3	4.7	8.0

(for stainless steel screw A2-70)

MOUNTING SCREW

Small screws for the SER(S) type slide guide are available from NB.

Table A-22 unit／mm

size	pitch	length ℓ	application
M2	0.4	4,5,6,8,10	SER 9A

(stainless steel)

Figure A-50 Mounting Screw

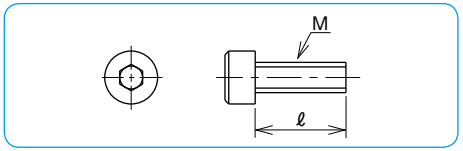

LUBRICATION

A high grade lithium soap based grease is applied to the NB slide guides prior to shipment for immediate use. Please relubricate with a similar type of grease periodically depending on the operating conditions. For use in clean rooms or vacuum environments, NB slide guides without grease are available upon request. Please contact NB for customer specified grease types.
A special syringe lubricant dispenser is available from NB as an option.
Please refer to page Eng-39 for details on the low dust generation grease.

www.bergab.ru Берг АБ bergab@ya.ru Тел. (495)-228-06-21, факс (495) 223-3071

www.bergab.ru Берг АБ bergab@ya.ru Тел. (495)-228-06-21, факс (495) 223-3071

SER-A TYPE

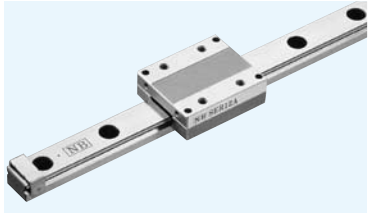

part number structure

example **SERS 15A UU 2-589 N P/W2**

- specification
  SER: standard
  SERS: anti-corrosion
- size
- seal
  blank: without side-seal
  UU: with side-seals
- number of blocks attached to one rail
- total length of rail
- rail mounting hole
  blank: counterbore
  N: tapped hole
- accuracy grade
  blank: high
  P: precision
- symbol for number of axes※
  blank: single axis
  W2: 2 parallel axes
  W3: 3 parallel axes

※ The symbol for the number of axes does not mean the number of rails ordered.

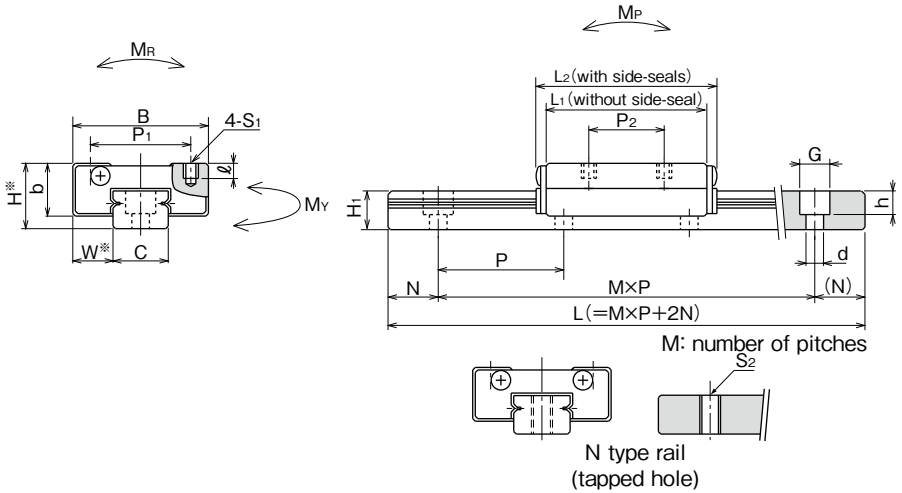

※Please refer to page A-35 for accuracy.

part number standard	part number anti-corrosion	assembly dimensions H mm	assembly dimensions W mm	block dimensions B mm	block dimensions L1 mm	block dimensions L2 mm	block dimensions P1 mm	block dimensions P2 mm	block dimensions S1	block dimensions ℓ mm	block dimensions b mm
SER 9A	SERS 9A	10	5.7	20	28	32	15	13	M2	2.5	7.8
SER12A	SERS12A	13	8	27	32	36	20	15	M3	3	10.5
SER15A	SERS15A	16	8.5	32	40	44	25	20		4	11.5
SER20A	SERS20A	25	13	46	60	66	38	38	M4	6	17.5

guide rail dimensions H1 mm	C mm	S2	d×G×h mm	N mm	P mm	basic load rating dynamic C kN	static Co kN	allowable static moment MP N・m	MY N・m	MR N・m	mass block g	guide rail g/100mm	block size
5.5	8.6	M4	2.6×4.5×3	7.5	20	2.65	2.94	11.8	13.7	19.6	25	35	9A
7.5	11		3.5×6×4.5	10	25	3.43	3.92	15.7	17.6	29.4	51	55	12A
9.5	15	M5		15	40	4.70	5.78	29.0	32.3	54.9	82	100	15A
15	20	M6	6×9.5×8.5	20	60	8.82	9.80	59.0	66.6	151	280	230	20A

1kN≒102kgf 1N・m≒0.102kgf・m

part number standard	part number anti-corrosion	standard rail length L mm							maximum length mm
SER 9A	SERS 9A	55	75	95	115	155	195	275	275
SER12A	SERS12A	120	170	220	270	320	370	470	470
SER15A	SERS15A	150	230	310	430	550	670		670
SER20A	SERS20A	220	280	340	460	640	880		880

www.bergab.ru Берг АБ bergab@ya.ru Тел. (495)-228-06-21, факс (495) 223-3071

www.bergab.ru Берг АБ bergab@ya.ru Тел. (495)-228-06-21, факс (495) 223-3071

SER-WA TYPE

– Wide Type –

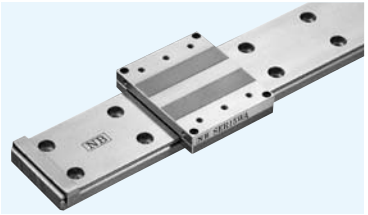

part number structure

example **SERS 15WA UU 2 - 589 N P / W2**

- specification — **SER**: standard; **SERS**: anti-corrosion
- size
- seal — **blank**: without side-seal; **UU**: with side-seals
- number of blocks attached to one rail
- total length of rail
- rail mounting hole — **blank**: counterbore; **N**: tapped hole
- accuracy grade — **blank**: high; **P**: precision
- symbol for number of axes※ — **blank**: single axis; **W2**: 2 parallel axes; **W3**: 3 parallel axes

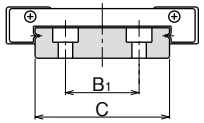

SER 15WA

※ The symbol for the number of axes does not mean the number of rails ordered.

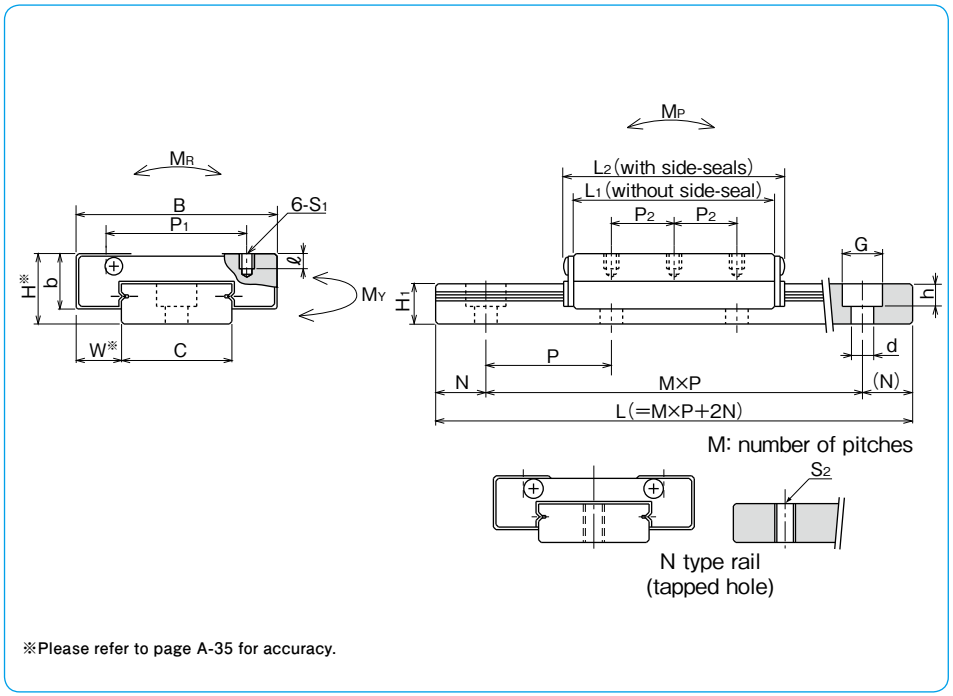

※Please refer to page A-35 for accuracy.

part number standard	part number anti-corrosion	assembly dimensions H mm	assembly dimensions W mm	B mm	L_1 mm	L_2 mm	P_1 mm	P_2 mm	S_1	ℓ mm	b mm
SER 9WA	**SERS 9WA**	12	6.5	30	35	39	21	10	M3	3	8.8
SER12WA	**SERS12WA**	14	9	40	40	44	28	12.5			11
SER15WA	**SERS15WA**	16		60	50	54	45	15	M4	4.5	11.5

guide rail dimensions H_1 mm	C mm	B_1 mm	S_2	d×G×h mm	N mm	P mm	basic load rating dynamic C kN	static Co kN	allowable static moment M_P N·m	M_Y N·m	M_R N·m	mass block g	guide rail g/100mm	block size
7.5	17	–	M4	3.5×6×4.5	10	30	3.43	3.72	24.5	27.4	51.9	46	90	**9WA**
8	22	–	M5	4.5×8×4.5	15	40	4.41	5.00	35.3	39.2	85.3	92	122	**12WA**
9.5	42	23					7.35	8.92	55.9	61.7	215.0	165	280	**15WA**

1kN≒102kgf 1N·m≒0.102kgf·m

part number standard	part number anti-corrosion	standard rail length L mm							maximum length mm
SER 9WA	**SERS 9WA**	80	110	140	170	200	260	290	290
SER12WA	**SERS12WA**	110	150	190	230	310	390	470	470
SER15WA	**SERS15WA**	150	230	310	430	550	670		670

www.bergab.ru Берг АБ bergab@ya.ru Тел. (495)-228-06-21, факс (495) 223-3071

www.bergab.ru Берг АБ bergab@ya.ru Тел. (495)-228-06-21, факс (495) 223-3071

SLIDE GUIDE SGL TYPE GL TYPE

The NB slide guide SGL type and GL type are linear motion bearings utilizing the rotational motion of ball elements along four rows of raceway grooves. It can be used in various applications due to its compactness and high load capacity.

STRUCTURE AND ADVANTAGES

The NB slide guide SGL type consists of a rail with 4 rows of precisely machined raceway grooves and a block assembly. The block assembly consists of the main body, ball elements, retainers, and return caps.
The NB slide guide GL type consists of a rail with 4 rows of precisely machined raceway grooves and a block assembly consisting of the main body, ball elements, ball cushions, retainers, a Fiber Sheet, and return caps.

High Load Capacity and Long Life

The use of relatively large ball elements and raceway grooves machined to a radius close to that of the ball elements increases the contact area resulting in a high load capacity and a long travel life.

Low Friction

Because a 4-row/2-point contact design is used, low friction and stable motion characteristics are achieved even under a preloaded conditions.

Omni-Directional Load Capacity

The ball elements are positioned at 45° contact angle so that the load capacity is equal in four directions (above, below, right and left).

Low Noise

In the GL type guide block, ball cushions are inserted between the steel balls preventing metal contact to lower the noise level. (See the noise data Figure A-58, page A-46.)

Absorption of Mounting Dimensional Error

Because the ball elements are positioned to increase their self-aligning characteristics, the dimensional error caused during installation is absorbed.

Anti-corrosion Specification

The rail and block assembly can be treated with low temperature black chrome treatment to increase the corrosion resistance. This treatment is standardized with the symbol "LB", and suitable for use in clean room application.

Dust Prevention

Side-seals are provided as a standard. To improve the dust prevention characteristics, under-seals, double-seals, scrapers, bellows and special rail mounting caps are also available. (GL type block has under-seals as standard.)

Fiber Sheet Extends Lubricant Replenishment Intervals

A lubricant-containing Fiber Sheet incorporated in the block supplies appropriate amount of lubricant to the raceway grooves at appropriate intervals, which can significantly extend the lubricant replenishment interval. (refer to page A-18)

Figure A-51 Structure of SGL type Slide Guide

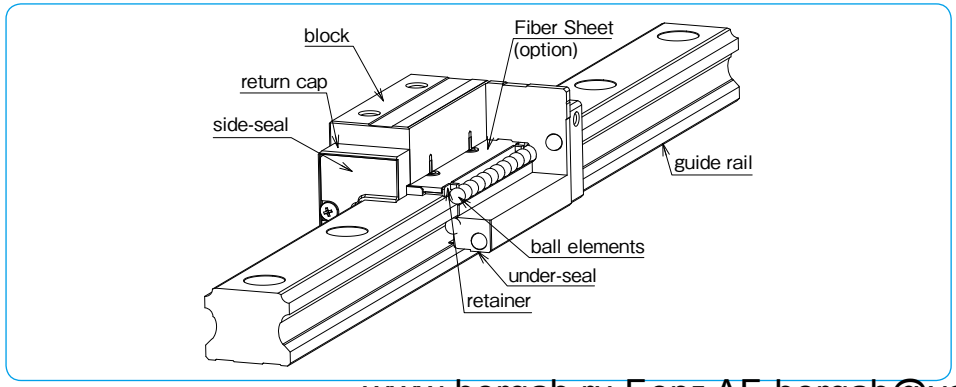

Figure A-52 Structure of GL type Slide Guide

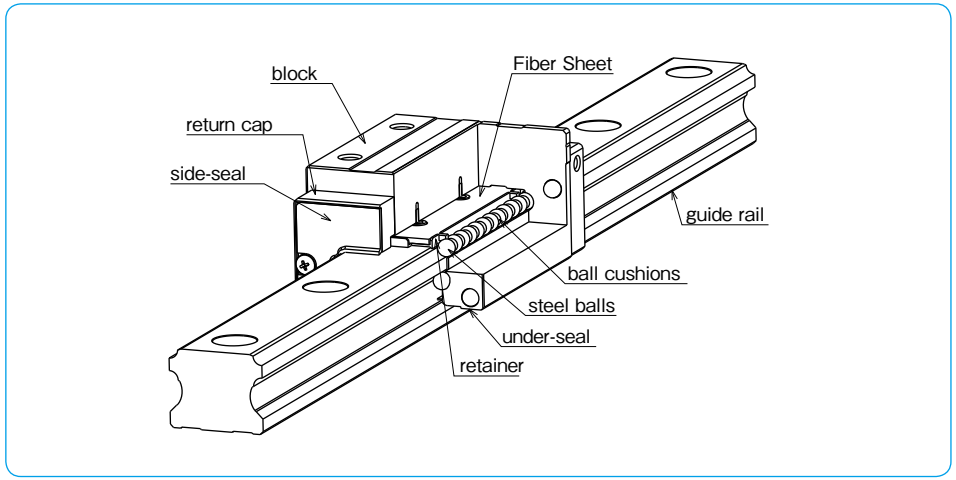

BLOCK TYPES

Nine SGL block types are available depending on the mounting space and desired mounting method.

SGL-F type	P.A-48	SGL-TF type	P.A-50	SGL-E type	P.A-56	SGL-TE type	P.A-58
SGLS-F type	P.A-48	SGLS-TF type	P.A-50			SGL-HTE type	P.A-60
		SGL-HTF type	P.A-52			SGL-HYE type	P.A-62
		SGL-HYF type	P.A-54			SGL-HTEX type	P.A-64

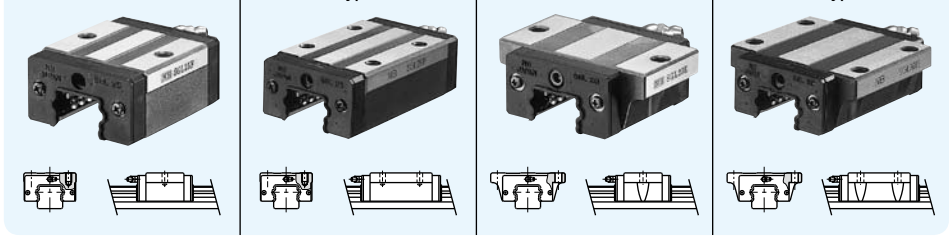

Six GL block types are available depending on the mounting space and desired mounting method.

GL-F type	P.A-66	GL-TF type	P.A-68	GL-E type	P.A-72	GL-TE type	P.A-74
		GL-HTF type	P.A-70			GL-HTE type	P.A-76

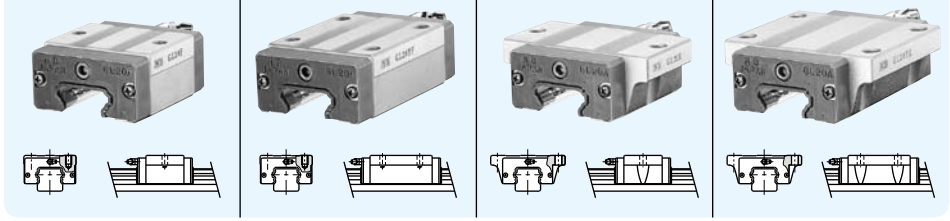

www.bergab.ru Берг АБ bergab@ya.ru Тел. (495)-228-06-21, факс (495) 223-3071

www.bergab.ru Берг АБ bergab@ya.ru Тел. (495)-228-06-21, факс (495) 223-3071

ACCURACY

Three accuracy grades are available: standard grade (blank), high grade (H), and precision grade (P).

Table A-23 Accuracy unit／mm

part number	SGL・GL15,20			SGL・GL25,30,35			SGL・GL45		
accuracy grade	standard	high	precision	standard	high	precision	standard	high	precision
accuracy symbol	blank	H	P	blank	H	P	blank	H	P
allowable dimensional tolerance for height H	±0.1	±0.03	−0.03~0	±0.1	±0.04	−0.04~0	±0.1	±0.05	−0.05~0
paired difference for height H	0.02	0.01	0.006	0.02	0.015	0.007	0.03	0.015	0.007
allowable dimensional tolerance for width W	±0.1	±0.03	−0.03~0	±0.1	±0.04	−0.04~0	±0.1	±0.05	−0.05~0
paired difference for width W	0.02	0.01	0.006	0.03	0.015	0.007	0.03	0.02	0.01
Running parallelism of surface C to surface A Running parallelism of surface D to surface B	refer to Figure A-53, 54								

Figure A-53 Motion Accuracy

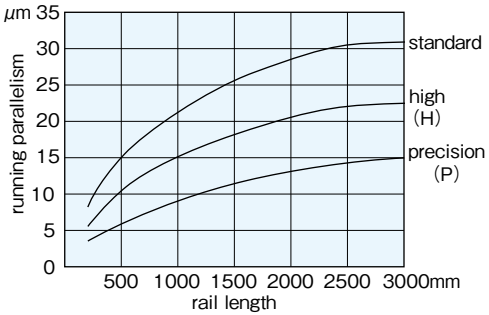

Figure A-54 Accuracy

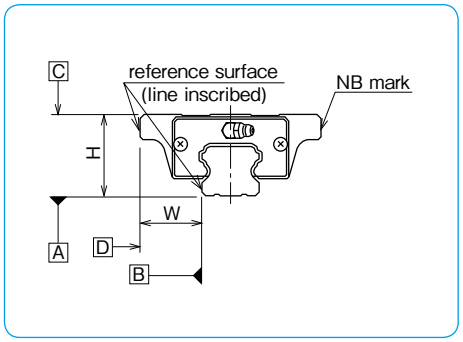

PRELOAD

SGL type and GL type slide guides are available with a standard preload (blank), light preload (T1), and medium preload (T2).

Table A-24 Preload Symbol and Radial Clearance unit／μm

preload	standard	light	medium
preload symbol	blank	T1	T2
SGL・GL15	− 4~+2	−12~− 4	—
SGL・GL20	− 5~+2	−14~− 5	−23~−14
SGL・GL25	− 6~+3	−16~− 6	−26~−16
SGL・GL30	− 7~+4	−19~− 7	−31~−19
SGL・GL35	− 8~+4	−22~− 8	−35~−22
SGL・GL45	−10~+5	−25~−10	−40~−25

Table A-25 Operating Conditions and Preload

preload	symbol	operating conditions
standard	blank	minute vibration is applied. accurate motion is required. moment is applied in a given direction.
light	T1	light vibration is applied. light torsional load is applied. moment is applied.
medium	T2	shock and vibration are applied. over-hang load Is applied. torsional load is applied.

RAIL LENGTH

Slide guides with most commonly used lengths are available as standard. For slide guides with a non-standard length, unless otherwise specified, the distance from one end of the rail to the first hole center (N) will be within the range listed in Table A-26, satisfying the following equation.

$$L = M \cdot P + 2N$$

L: length (mm) M: number of pitches P: hole pitch (mm)
N: distance from the end of the rail to the first hole center (mm)

Table A-26 N Dimension unit/mm

part number	N and over	N less than	L max.
SGL・GL15	6	36	2,000
SGL・GL20	10	40	3,000
SGL・GL25	11	41	
SGL・GL30	12	52	
SGL・GL35	16	56	
SGL・GL45	20	62.5	

Figure A-55 Rail

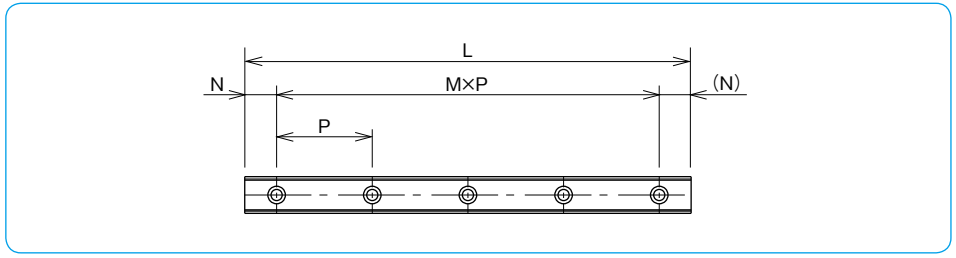

MOUNTING

Slide guides are generally mounted by pushing the reference surface of the rail and block against the shoulder of the mounting surface. An escape groove should be provided at the corner of the shoulder in order to avoid interference with the corner of the rail or block. The recommended shoulder height values are shown in Table A-28.
The screws to fasten the rail should be tightened equally using a torque wrench in order to secure the motion accuracy. The recommended torque values are listed in Table A-27. Please adjust the torque depending on the operating conditions.

Figure A-56 Mounting Reference Surface Profile

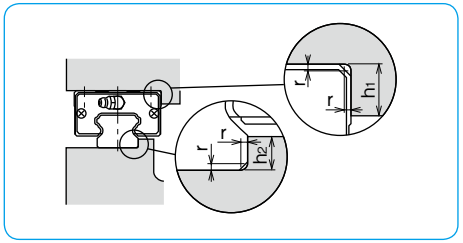

Table A-27 Recommended Torque unit／N・m

size	M3	M4	M5	M6	M8	M12
recommended torque	1.4	3.2	6.6	11.2	27.6	96.4

(for steel alloy screws)

Table A-28 Shoulder Height Dimensions unit/mm

part number	h_1	h_2	$r_{max.}$
SGL・GL15	4	3.5	0.5
SGL・GL20	5	5	0.5
SGL・GL25	5	5.5	1
SGL・GL30	6	7.5	1
SGL・GL35	6	8	1
SGL・GL45	8	8	1

www.bergab.ru Берг АБ bergab@ya.ru Тел. (495)-228-06-21, факс (495) 223-3071

www.bergab.ru Берг АБ bergab@ya.ru Тел. (495)-228-06-21, факс (495) 223-3071

GREASE FITTING

A grease fitting is attached to the return cap of SGL type and GL type guide blocks for lubrication purposes. Unless otherwise specified, the orientation of the grease fitting is as shown in Figure A-57. When more than 2 blocks are used on one rail, please specify the grease fitting orientation.

Figure A-57 Grease Fitting Orientation

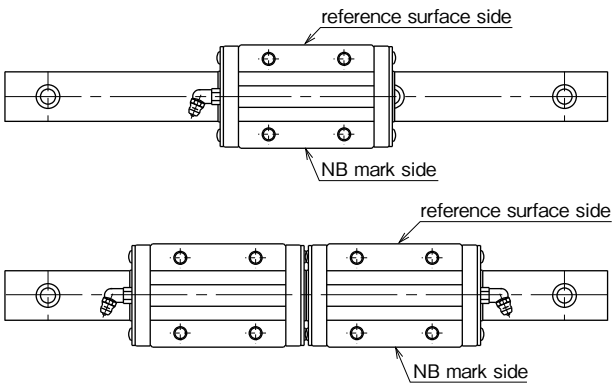

LOW NOISE

Ball cushions are inserted between the steel balls preventing metal contact, enabling low noise.

Figure A-58 Noise Data

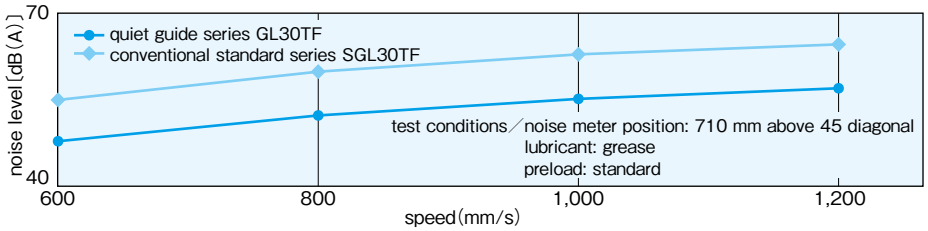

HIGH LOAD CAPACITY AND LONG LIFE

The GL type slide guide has a load rating of 1.2 to 1.6 times greater than the load rating of other branded "low-noise" type guides. This high load capacity enables a longer travel life.

Figure A-59 Load Rating Comparison

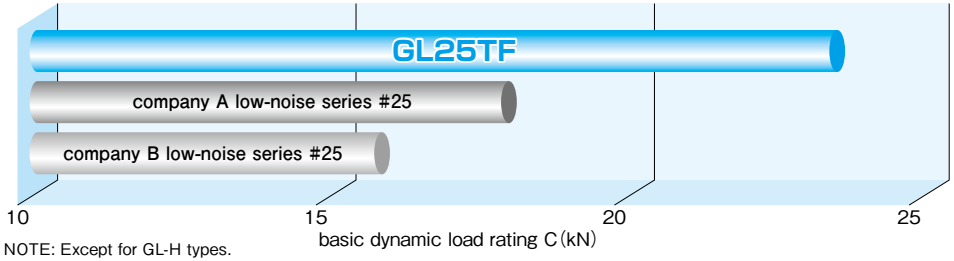

NOTE: Except for GL-H types.

CLEAN OPERATIOIN

Ball cushions eliminate metal contact between the steel balls and prevent excess grease spatter, enabling linear operation with low levels of dust generation.

Figure A-60 Dust Generation Data

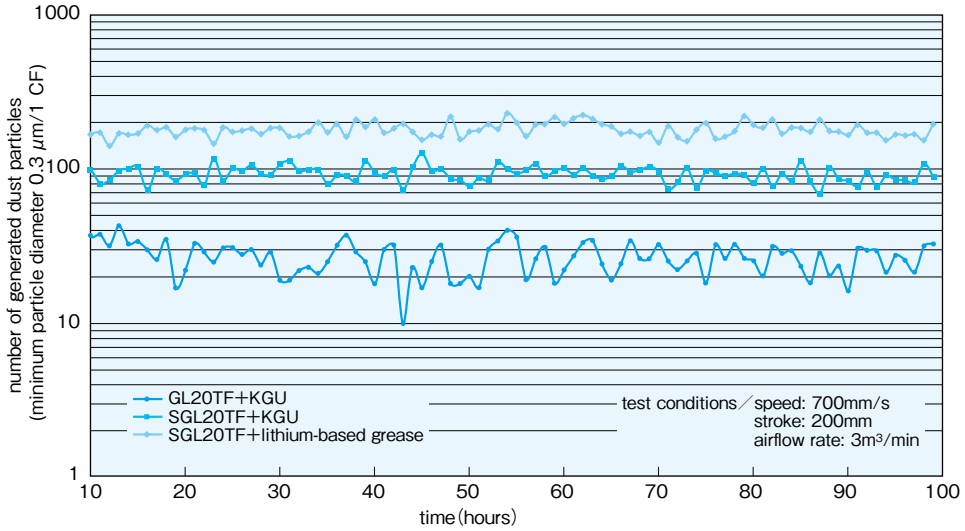

NOTE: Clean room level is to be specified when ordering.

www.bergab.ru Берг АБ bergab@ya.ru Тел. (495)-228-06-21, факс (495) 223-3071

www.bergab.ru Берг АБ bergab@ya.ru Тел. (495)-228-06-21, факс (495) 223-3071

SGL-F TYPE

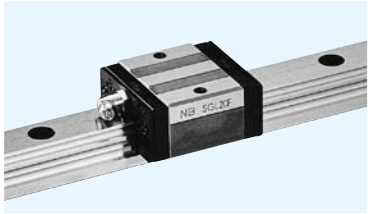

part number structure

example **SGL 15 F B 2 T1 - 589 D P / W2 FS LB F J - KGL**

- specification — **SGL**: standard; **SGLS**: anti-corrosion
- size
- block style
- seal (refer to page A-14) — **blank**: with side-seals; **B**: with side-seals + under-seals; **BW**: with double-seals + under-seals; **BS**: B + scraper
- number of blocks attached to one rail
- preload symbol — **blank**: standard; **T1**: light; **T2**: medium
- total length of rail
- size of rail installation hole (D type rail is available only for SGL 15)
- accuracy grade — **blank**: standard; **H**: high; **P**: precision
- symbol for number of axes※ — **blank**: single axis; **W2**: 2 parallel axes; **W3**: 3 parallel axes
- with Fiber Sheet (Fiber Sheet comes only with standard grease.)
- with low temperature black chrome treatment
- with rail mounting hole caps
- with bellows (refer to page A-16)
- symbol for grease — **blank**: standard grease; **KGL**: lithium-based grease; **KGU**: urea-based grease; **KGF**: anti-fretting grease; **GK**: K-grease (refer to page Eng-39~)

※The symbol for the number of axes does not mean the number of rails ordered.

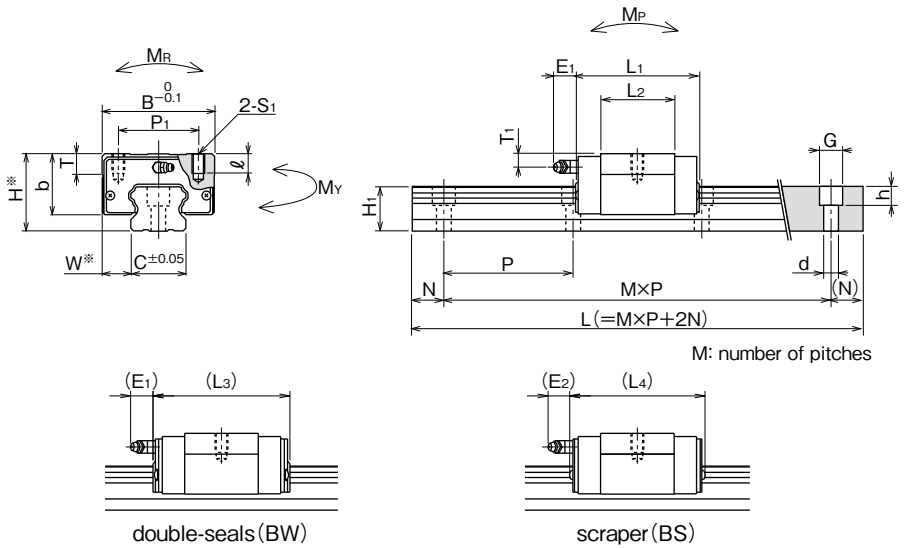

※Please refer to page A-44 for accuracy.

part number standard	part number anti-corrosion	assembly dimensions H mm	assembly dimensions W mm	block dimensions B mm	L1 mm	L2 mm	L3 mm	L4 mm	P1 mm	S1	ℓ mm	T mm	b mm	E1 mm
SGL15F SGL15F-D	SGLS15F SGLS15F-D	24	9.5	34	40.7	22.7	46.9	47.3	26	M4	7	6	19.5	6
SGL20F	SGLS20F	28	11	42	47.9	29.5	54.1	54.5	32	M5	8	7.5	22	12
SGL25F	SGLS25F	33	12.5	48	58.7	37.7	65.1	65.9	35	M6	9	8	26	
SGL30F	—	42	16	60	68	40	76.6	75.6	40	M8	12	9	32.5	
SGL35F	—	48	18	70	77	46	85.6	84.6	50			13	38	

E2 mm	T1 mm	grease fitting	guide rail dimensions H1 mm	C mm	d×G×h mm	N mm	P mm	basic load rating dynamic C kN	static Co kN	allowable static moment MP / MP2 N・m	MY / MY2 N・m	MR N・m	mass block kg	guide rail kg/m	block size
5.4	5	pressed fitting	13.5	15	3.5×6×4.5 4.5×7.5×5.3	20	60	7.29	9.46	37 252	37 252	74	0.1	1.3	15
11	6	B-M6F	16	20	6×9.5×8.5			11.91	14.81	72 447	72 447	159	0.2	2.1	20
	6.5		20	23	7×11×9			17.0	21.2	123 751	123 751	255	0.3	3.0	25
	9		24	28			80	23.0	28.7	195 1,263	195 1,263	418	0.5	4.6	30
	8.5		27.5	34	9×14×12			32.0	37.8	294 1,873	294 1,873	693	0.8	6.2	35

1kN≒102kgf 1N・m≒0.102kgf・m

part number standard	part number anti-corrosion	standard rail length L mm																		maximum length mm standard	maximum length mm anti-corrosion
SGL15	SGLS15	160	220	280	340	400	460	520	580	640	700	760	820	880	940	1,000	1,120	1,240	1,360	2,000	1,480
SGL20	SGLS20	220	280	340	400	460	520	580	640	700	760	820	880	940	1,000	1,120	1,240	1,360	1,480	3,000	1,480
SGL25	SGLS25	220	280	340	400	460	520	580	640	700	760	820	880	940	1,000	1,120	1,240	1,360	1,480	3,000	1,480
SGL30	—	280	360	440	520	600	680	760	840	920	1,000	1,080	1,160	1,240	1,320	1,400	1,480	1,640	1,720	3,000	—
SGL35	—	280	360	440	520	600	680	760	840	920	1,000	1,080	1,160	1,240	1,320	1,400	1,480	1,640	1,720	3,000	—

Rails exceeding the maximum specified length may be fabricated if joints are used. Please contact NB for assistance.

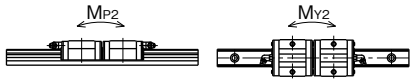

When two blocks are used in close contact.

www.bergab.ru Берг АБ bergab@ya.ru Тел. (495)-228-06-21, факс (495) 223-3071

www.bergab.ru Берг АБ bergab@ya.ru Тел. (495)-228-06-21, факс (495) 223-3071

SGL-TF TYPE

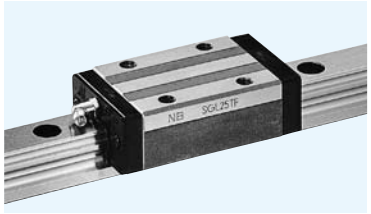

part number structure

example **SGL 15 TF B 2 T1 - 589 D P / W2 FS LB F J - KGL**

- specification — SGL: standard; SGLS: anti-corrosion
- size
- block style
- seal (refer to page A-14) — blank: with side-seals; B: with side-seals + under-seals; BW: with double-seals + under-seals; BS: B + scraper
- number of blocks attached to one rail
- preload symbol — blank: standard; T1: light; T2: medium
- total length of rail
- size of rail installation hole (D type rail is available only for SGL 15)
- symbol for grease — blank: standard grease; KGL: lithium-based grease; KGU: urea-based grease; KGF: anti-fretting grease; GK: K-grease; refer to page Eng-39~
- with bellows (refer to page A-16)
- with rail mounting hole caps
- with low temperature black chrome treatment
- with Fiber Sheet (Fiber Sheet comes only with standard grease.)
- symbol for number of axes※ — blank: single axis; W2: 2 parallel axes; W3: 3 parallel axes
- accuracy grade — blank: standard; H: high; P: precision

※The symbol for the number of axes does not mean the number of rails ordered.

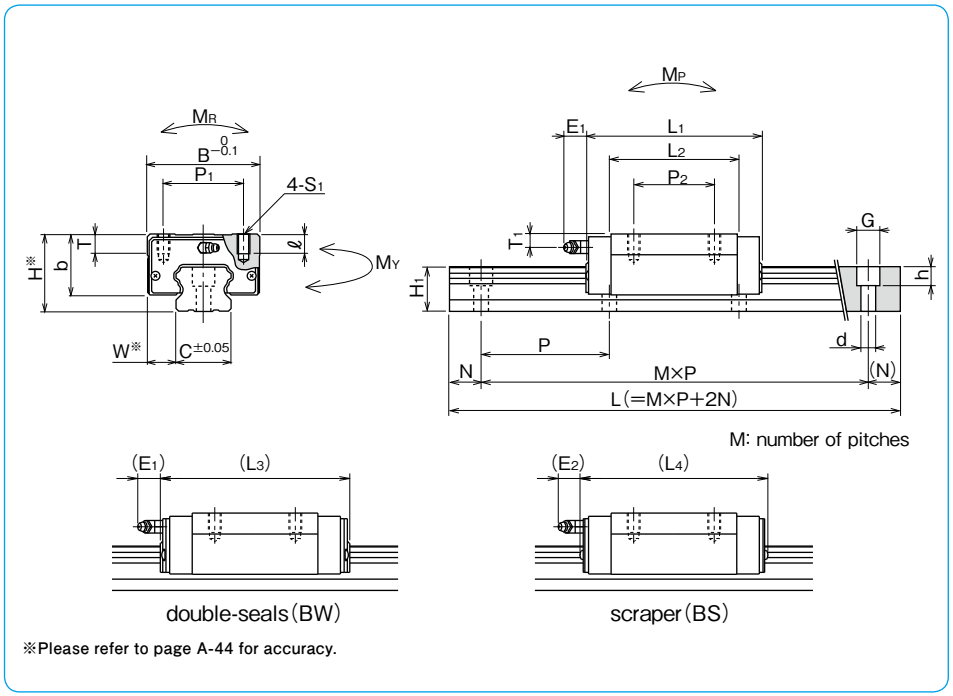

※Please refer to page A-44 for accuracy.

part number standard	part number anti-corrosion	assembly dimensions H mm	assembly dimensions W mm	block dimensions B mm	L1 mm	L2 mm	L3 mm	L4 mm	P1 mm	P2 mm	S1	ℓ mm	T mm	b mm	E1 mm
SGL15TF SGL15TF-D	SGLS15TF SGLS15TF-D	24	9.5	34	56.5	38.5	62.7	63.1	26	26	M4	7	6	19.5	6
SGL20TF	SGLS20TF	28	11	42	65.8	47.4	72.0	72.4	32	32	M5	8	7.5	22	12
SGL25TF	SGLS25TF	33	12.5	48	80	59	86.4	87.2	35	35	M6	9	8	26	
SGL30TF	—	42	16	60	95.7	67.7	104.3	103.3	40	40	M8	12	9	32.5	
SGL35TF	—	48	18	70	109	78	117.6	116.6	50	50			13	38	

E2 mm	T1 mm	grease fitting	H1 mm	C mm	d×G×h mm	N mm	P mm	basic load rating dynamic C kN	basic load rating static Co kN	allowable static moment MP N・m	MY N・m	MR N・m	mass block kg	mass guide rail kg/m	block size
5.4	5	pressed fitting	13.5	15	3.5×6×4.5 4.5×7.5×5.3	20	60	10.6	16.2	100	100	127	0.2	1.3	15
11	6	B-M6F	16	20	6×9.5×8.5			16.4	23.3	165	165	250	0.3	2.1	20
	6.5		20	23	7×11×9			24.8	36.3	335	335	437	0.4	3.0	25
	9		24	28			80	33.6	49.2	529	529	716	0.8	4.6	30
	8.5		27.5	34	9×14×12			46.7	64.8	796	796	1,188	1.3	6.2	35

1kN≒102kgf 1N・m≒0.102kgf・m

part number standard	part number anti-corrosion	standard rail length L mm																maximum length mm standard	maximum length mm anti-corrosion
SGL15	SGLS15	160	220	280	340	400	460	520	580	640	700	760	820	880	940	1,000	1,120	2,000	1,480
SGL20	SGLS20	220	280	340	400	460	520	580	640	700	760	820	880	940	1,000	1,120	1,240	3,000	1,480
SGL25	SGLS25	220	280	340	400	460	520	580	640	700	760	820	880	940	1,000	1,120	1,240	3,000	1,480
SGL30	—	280	360	440	520	600	680	760	840	920	1,000	1,080	1,160	1,240	1,320	1,400	1,480	3,000	—
SGL35	—	280	360	440	520	600	680	760	840	920	1,000	1,080	1,160	1,240	1,320	1,400	1,480	3,000	—

Rails exceeding the maximum specified length may be fabricated if joints are used. Please contact NB for assistance.

www.bergab.ru Берг АБ bergab@ya.ru Тел. (495)-228-06-21, факс (495) 223-3071

www.bergab.ru Берг АБ bergab@ya.ru Тел. (495)-228-06-21, факс (495) 223-3071

SGL-HTF TYPE

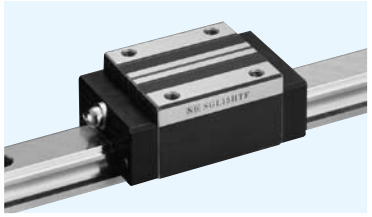

part number structure

example **SGL 15 HTF B 2 T1 - 589 P / W2 FS LB F J - KGL**

- SGL type
- size
- block style
- seal (refer to page A-14)
  blank: with side-seals
  B: with side-seals + under-seals
  BW: with double-seals + under-seals
  BS: B + scraper
- number of blocks attached to one rail
- preload symbol
  blank: standard
  T1: light
  T2: medium
- total length of rail
- accuracy grade
  blank: standard
  H: high
  P: precision
- symbol for number of axes※
  blank: single axis
  W2: 2 parallel axes
  W3: 3 parallel axes
- with low temperature black chrome treatment
- with rail mounting hole caps
- with Fiber Sheet
  (Fiber Sheet comes only with standard grease.)
- with bellows (refer to page A-16)
- symbol for grease
  blank: standard grease
  KGL: lithium-based grease
  KGU: urea-based grease
  KGF: anti-fretting grease
  GK: K-grease
  refer to page Eng-39~

※The symbol for the number of axes does not mean the number of rails ordered.

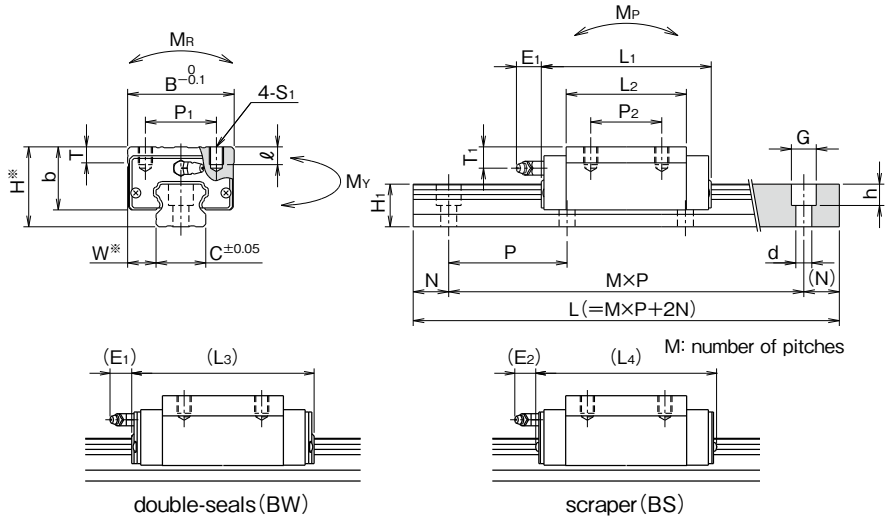

※Please refer to page A-44 for accuracy.

part number	assembly dimensions H mm	W mm	block dimensions B mm	L1 mm	L2 mm	L3 mm	L4 mm	P1 mm	P2 mm	S1	ℓ mm	T mm	b mm	E1 mm	E2 mm
SGL15HTF	28	9.5	34	56.5	38.5	62.7	63.1	26	26	M4	5	6	23.7	6	5.4
SGL20HTF	30	12	44	71.6	53.2	77.8	78.2	32	36	M5	6	9.5	24	12	11
SGL25HTF	40	12.5	48	80	59	86.4	87.2	35	35	M6	8	9	33		
SGL30HTF	45	16	60	95.7	67.7	104.3	103.3	40	40	M8	10		35.5		
SGL35HTF	55	18	70	109	78	117.6	116.6	50	50		12	13	45		
SGL45HTF	70	20.5	86	139	102	147.5	148	60	60	M10	17	15	60	15	15

T1 mm	grease fitting	guide rail dimensions H1 mm	C mm	d×G×h mm	N mm	P mm	basic load rating dynamic C kN	static Co kN	allowable static moment MP N・m	MY N・m	MR N・m	mass block kg	guide rail kg/m	block size
9	pressed fitting	13.5	15	4.5×7.5×5.3	20	60	10.6	16.2	100	100	127	0.2	1.3	**15**
8	B-M6F	16	20	6×9.5×8.5			18.4	27.5	227	227	296	0.4	2.1	**20**
13.5		20	23	7×11×9			24.8	36.3	335	335	437	0.6	3.0	**25**
12		24	28	9×14×12		80	33.6	49.2	529	529	716	0.9	4.6	**30**
15.5		27.5	34				46.7	64.8	796	796	1,188	1.5	6.2	**35**
20	B-PT1/8	36.5	45	14×20×17	22.5	105	74.8	101.2	1,553	1,553	2,312	3.1	10.5	**45**

1kN≒102kgf 1N・m≒0.102kgf・m

part number	standard rail length L mm																maximum length mm
SGL15	160	220	280	340	400	460	520	580	640	700	760	820	880	940	1,000	1,120	2,000
SGL20	220	280	340	400	460	520	580	640	700	760	820	880	940	1,000	1,120	1,240	3,000
SGL25	220	280	340	400	460	520	580	640	700	760	820	880	940	1,000	1,120	1,240	3,000
SGL30	280	360	440	520	600	680	760	840	920	1,000	1,080	1,160	1,240	1,320	1,400	1,480	3,000
SGL35	280	360	440	520	600	680	760	840	920	1,000	1,080	1,160	1,240	1,320	1,400	1,480	3,000
SGL45	570	675	780	885	990	1,095	1,200	1,305	1,410	1,515	1,620	1,725	1,830	1,935	2,040	2,145	3,000

Rails exceeding the maximum specified length may be fabricated if joints are used. Please contact NB for assistance.

www.bergab.ru Берг АБ bergab@ya.ru Тел. (495)-228-06-21, факс (495) 223-3071

www.bergab.ru Берг АБ bergab@ya.ru Тел. (495)-228-06-21, факс (495) 223-3071

SGL-HYF TYPE

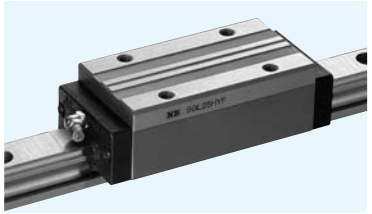

part number structure

example **SGL 15 HYF B 2 T1 - 589 P / W2 FS LB F J - KGL**

- SGL type
- size
- block style
- seal (refer to page A-14)
  blank: with side-seals
  B: with side-seals + under-seals
  BW: with double-seals + under-seals
  BS: B + scraper
- number of blocks attached to one rail
- preload symbol
  blank: standard
  T1: light
  T2: medium
- total length of rail
- accuracy grade
  blank: standard
  H: high
  P: precision
- symbol for number of axes※
  blank: single axis
  W2: 2 parallel axes
  W3: 3 parallel axes
- with Fiber Sheet
  (Fiber Sheet comes only with standard grease.)
- with low temperature black chrome treatment
- with rail mounting hole caps
- with bellows (refer to page A-16)
- symbol for grease
  blank: standard grease
  KGL: lithium-based grease
  KGU: urea-based grease
  KGF: anti-fretting grease
  GK: K-grease
  refer to page Eng-39~

※The symbol for the number of axes does not mean the number of rails ordered.

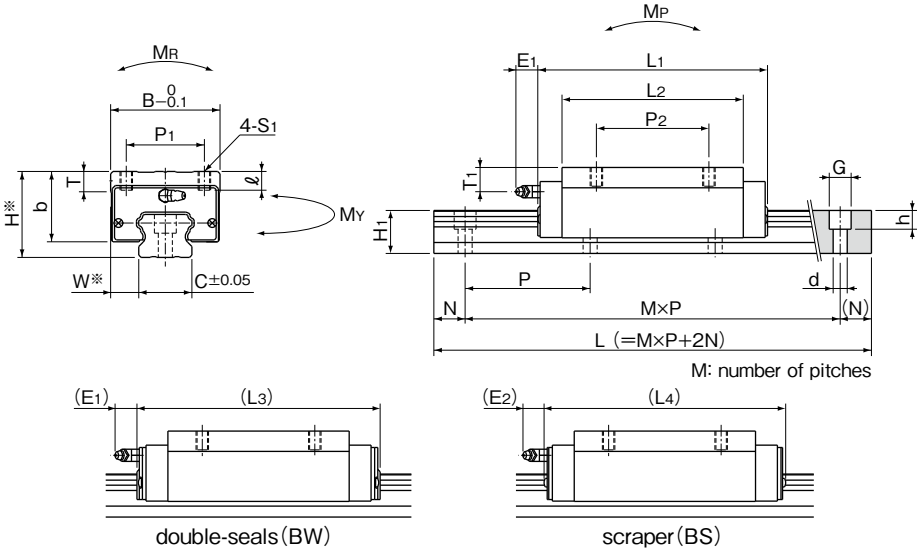

※Please refer to page A-44 for accuracy.

part number	assembly dimensions H mm	W mm	block dimensions B mm	L1 mm	L2 mm	L3 mm	L4 mm	P1 mm	P2 mm	S1	ℓ mm	T mm	b mm	E1 mm	E2 mm
SGL15HYF	28	9.5	34	79	61	82.5	85.6	26	26	M4	5	6	23.7	6	5.4
SGL20HYF	30	12	44	96	77.6	102.2	102.6	32	50	M5	6	9.5	24	12	11
SGL25HYF	40	12.5	48	109	88	115.4	116.2	35	50	M6	8	9	33		
SGL30HYF	45	16	60	129	101	137.6	136.6	40	60	M8	10		35.5		
SGL35HYF	55	18	70	147	116	155.6	154.6	50	72		12	13	45		
SGL45HYF	70	20.5	86	171	134	179.5	180	60	80	M10	17	15	60	15	15

part number	T1 mm	grease fitting	guide rail dimensions H1 mm	C mm	d×G×h mm	N mm	P mm	basic load rating dynamic C kN	static Co kN	allowable static moment MP N・m	MY N・m	MR N・m	mass block kg	guide rail kg/m	block size
SGL15HYF	9	pressed fitting	13.5	15	4.5×7.5×5.3	20	60	14.6	25.6	238	238	200	0.3	1.3	**15**
SGL20HYF	8	B-M6F	16	20	6×9.5×8.5			23.9	40.2	467	467	432	0.5	2.1	**20**
SGL25HYF	13.5		20	23	7×11×9			32.8	54.5	723	723	655	0.9	3.0	**25**
SGL30HYF	12		24	28	9×14×12		80	44.6	73.8	1,144	1,144	1,074	1.3	4.6	**30**
SGL35HYF	15.5		27.5	34				61.9	97.2	1,722	1,722	1,782	2.2	6.2	**35**
SGL45HYF	20	B-PT1/8	36.5	45	14×20×17	22.5	105	91.4	134.9	2,681	2,681	3,082	4.0	10.5	**45**

1kN≒102kgf 1N・m≒0.102kgf・m

part number	standard rail length L mm																maximum length mm
SGL15	160	220	280	340	400	460	520	580	640	700	760	820	880	940	1,000	1,120	2,000
SGL20	220	280	340	400	460	520	580	640	700	760	820	880	940	1,000	1,120	1,240	3,000
SGL25	220	280	340	400	460	520	580	640	700	760	820	880	940	1,000	1,120	1,240	3,000
SGL30	280	360	440	520	600	680	760	840	920	1,000	1,080	1,160	1,240	1,320	1,400	1,480	3,000
SGL35	280	360	440	520	600	680	760	840	920	1,000	1,080	1,160	1,240	1,320	1,400	1,480	3,000
SGL45	570	675	780	885	990	1,095	1,200	1,305	1,410	1,515	1,620	1,725	1,830	1,935	2,040	2,145	3,000

Rails exceeding the maximum specified length may be fabricated if joints are used. Please contact NB for assistance.

www.bergab.ru Берг АБ bergab@ya.ru Тел. (495)-228-06-21, факс (495) 223-3071

www.bergab.ru Берг АБ bergab@ya.ru Тел. (495)-228-06-21, факс (495) 223-3071

SGL-E TYPE

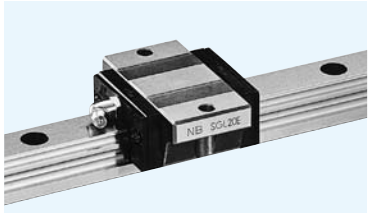

part number structure

example **SGL 15 E B 2 T1 - 589 D P / W2 FS LB F J - KGL**

- SGL type
- size
- block style
- seal (refer to page A-14)
  blank: with side-seals
  B: with side-seals + under-seals
  BW: with double-seals + under-seals
  BS: B + scraper
- number of blocks attached to one rail
- preload symbol
  blank: standard
  T1: light
  T2: medium
- total length of rail
- size of rail installation hole (D type rail is available only for SGL 15)
- accuracy grade
  blank: standard
  H: high
  P: precision
- symbol for number of axes※
  blank: single axis
  W2: 2 parallel axes
  W3: 3 parallel axes
- with Fiber Sheet
  (Fiber Sheet comes only with standard grease.)
- with low temperature black chrome treatment
- with rail mounting hole caps
- with bellows (refer to page A-16)
- symbol for grease
  blank: standard grease
  KGL: lithium-based grease
  KGU: urea-based grease
  KGF: anti-fretting grease
  GK: K-grease
  refer to page Eng-39~

※The symbol for the number of axes does not mean the number of rails ordered.

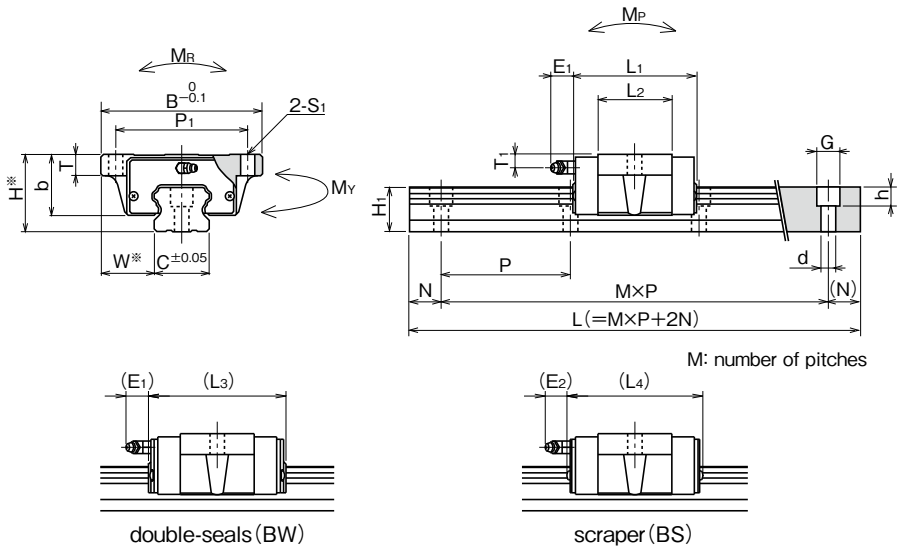

※Please refer to page A-44 for accuracy.

part number	assembly dimensions H mm	W mm	block dimensions B mm	L1 mm	L2 mm	L3 mm	L4 mm	P1 mm	S1 mm	T mm	b mm	E1 mm	E2 mm
SGL15E SGL15E-D	24	18.5	52	40.7	22.7	46.9	47.3	41	4.5	7	19.5	6	5.4
SGL20E	28	19.5	59	47.9	29.5	54.1	54.5	49	5.5	9	22	12	11
SGL25E	33	25	73	58.7	37.7	65.1	65.9	60	7	10	26		
SGL30E	42	31	90	68	40	76.6	75.6	72	9		32.5		
SGL35E	48	33	100	77	46	85.6	84.6	82		13	38		

part number	T1 mm	grease fitting	guide rail dimensions H1 mm	C mm	d×G×h mm	N mm	P mm	basic load rating dynamic C kN	static Co kN	allowable static moment MP MP2 N・m	MY MY2 N・m	MR N・m	mass block kg	guide rail kg/m	block size
SGL15E SGL15E-D	5	pressed fitting	13.5	15	3.5×6×4.5 4.5×7.5×5.3	20	60	7.29	9.46	37 252	37 252	74	0.1	1.3	15
SGL20E	6	B-M6F	16	20	6×9.5×8.5			11.91	14.81	72 447	72 447	159	0.2	2.1	20
SGL25E	6.5		20	23	7×11×9			17.0	21.2	123 751	123 751	255	0.4	3.0	25
SGL30E	9		24	28			80	23.0	28.7	195 1,263	195 1,263	418	0.6	4.6	30
SGL35E	8.5		27.5	34	9×14×12			32.0	37.8	294 1,873	294 1,873	693	0.9	6.2	35

1kN≒102kgf 1N・m≒0.102kgf・m

part number	standard rail length L mm																maximum length mm
SGL15	160	220	280	340	400	460	520	580	640	700	760	820	880	940	1,000	1,120	1,240
SGL20	220	280	340	400	460	520	580	640	700	760	820	880	940	1,000	1,120	1,240	1,360
SGL25	220	280	340	400	460	520	580	640	700	760	820	880	940	1,000	1,120	1,240	1,360
SGL30	280	360	440	520	600	680	760	840	920	1,000	1,080	1,160	1,240	1,320	1,400	1,480	1,640
SGL35	280	360	440	520	600	680	760	840	920	1,000	1,080	1,160	1,240	1,320	1,400	1,480	1,640

Rails exceeding the maximum specified length may be fabricated if joints are used. Please contact NB for assistance.

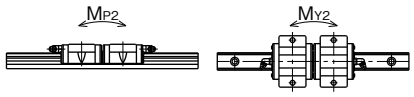

When two blocks are used in close contact.

www.bergab.ru Берг АБ bergab@ya.ru Тел. (495)-228-06-21, факс (495) 223-3071

www.bergab.ru Берг АБ bergab@ya.ru Тел. (495)-228-06-21, факс (495) 223-3071

SGL-TE TYPE

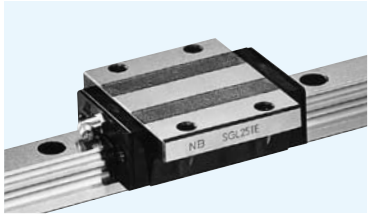

part number structure

example **SGL 15 TE B 2 T1 - 589 D P / W2 FS LB F J - KGL**

- SGL type
- size
- block style
- seal (refer to page A-14)
  blank: with side-seals
  B: with side-seals + under-seals
  BW: with double-seals + under-seals
  BS: B + scraper
- number of blocks attached to one rail
- preload symbol
  blank: standard
  T1: light
  T2: medium
- total length of rail
- size of rail installation hole (D type rail is available only for SGL 15)
- accuracy grade
  blank: standard
  H: high
  P: precision
- symbol for number of axes※
  blank: single axis
  W2: 2 parallel axes
  W3: 3 parallel axes
- with Fiber Sheet
  (Fiber Sheet comes only with standard grease.)
- with low temperature black chrome treatment
- with rail mounting hole caps
- with bellows (refer to page A-16)
- symbol for grease
  blank: standard grease
  KGL: lithium-based grease
  KGU: urea-based grease
  KGF: anti-fretting grease
  GK: K-grease
  refer to page Eng-39~

※The symbol for the number of axes does not mean the number of rails ordered.

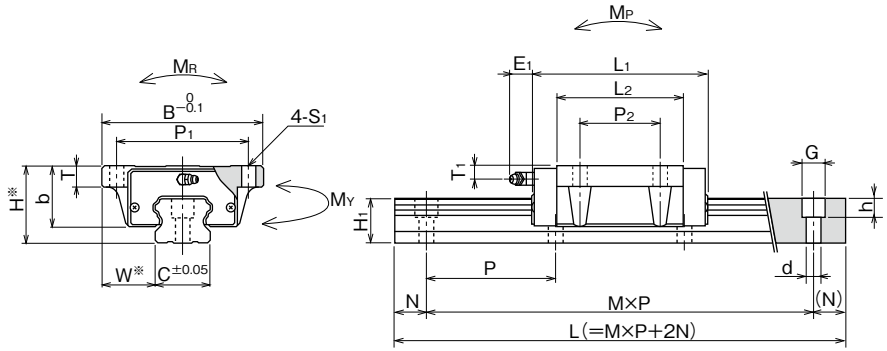

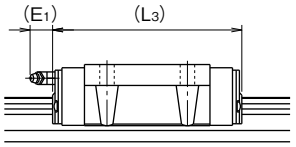

double-seals(BW)

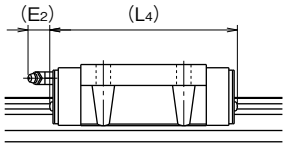

scraper(BS)

※Please refer to page A-44 for accuracy.

part number	assembly dimensions H mm	W mm	block dimensions B mm	L1 mm	L2 mm	L3 mm	L4 mm	P1 mm	P2 mm	S1 mm	T mm	b mm	E1 mm	E2 mm
SGL15TE SGL15TE-D	24	18.5	52	56.5	38.5	62.7	63.1	41	26	4.5	7	19.5	6	5.4
SGL20TE	28	19.5	59	65.8	47.4	72.0	72.4	49	32	5.5	9	22	12	11
SGL25TE	33	25	73	80	59	86.4	87.2	60	35	7	10	26		
SGL30TE	42	31	90	95.7	67.7	104.3	103.3	72	40	9		32.5		
SGL35TE	48	33	100	109	78	117.6	116.6	82	50		13	38		

T1 mm	grease fitting	guide rail dimensions H1 mm	C mm	d×G×h mm	N mm	P mm	basic load rating dynamic C kN	static Co kN	allowable static moment MP N・m	MY N・m	MR N・m	mass block kg	guide rail kg/m	block size
5	pressed fitting	13.5	15	3.5×6×4.5 4.5×7.5×5.3	20	60	10.6	16.2	100	100	127	0.2	1.3	15
6	B-M6F	16	20	6×9.5×8.5			16.4	23.3	165	165	250	0.3	2.1	20
6.5		20	23	7×11×9			24.8	36.3	335	335	437	0.6	3.0	25
9		24	28			80	33.6	49.2	529	529	716	1.0	4.6	30
8.5		27.5	34	9×14×12			46.7	64.8	796	796	1,188	1.5	6.2	35

1kN≒102kgf 1N・m≒0.102kgf・m

part number	standard rail length L mm															
SGL15	160	220	280	340	400	460	520	580	640	700	760	820	880	940	1,000	1,120
SGL20	220	280	340	400	460	520	580	640	700	760	820	880	940	1,000	1,120	1,240
SGL25	220	280	340	400	460	520	580	640	700	760	820	880	940	1,000	1,120	1,240
SGL30	280	360	440	520	600	680	760	840	920	1,000	1,080	1,160	1,240	1,320	1,400	1,480
SGL35	280	360	440	520	600	680	760	840	920	1,000	1,080	1,160	1,240	1,320	1,400	1,480

Rails exceeding the maximum specified length may be fabricated if joints are used. Please contact NB for assistance.

																	maximum length mm
1,240	1,360	1,480															2,000
1,360	1,480	1,600	1,660	1,720	1,840	1,960											3,000
1,360	1,480	1,600	1,660	1,720	1,840	1,960											3,000
1,640	1,720	1,800	1,880	1,960													3,000
1,640	1,720	1,800	1,880	1,960													3,000

www.bergab.ru Берг АБ bergab@ya.ru Тел. (495)-228-06-21, факс (495) 223-3071

www.bergab.ru Берг АБ bergab@ya.ru Тел. (495)-228-06-21, факс (495) 223-3071

SGL-HTE TYPE

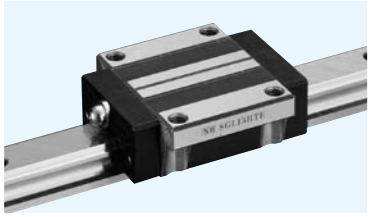

part number structure

example **SGL 15 HTE B 2 T1 - 589 P / W2 FS LB F J - KGL**

- SGL type
- size
- block style
- seal (refer to page A-14)
  blank: with side-seals
  B: with side-seals + under-seals
  BW: with double-seals + under-seals
  BS: B + scraper
- number of blocks attached to one rail
- preload symbol
  blank: standard
  T1: light
  T2: medium
- total length of rail
- accuracy grade
  blank: standard
  H: high
  P: precision
- symbol for number of axes※
  blank: single axis
  W2: 2 parallel axes
  W3: 3 parallel axes
- with low temperature black chrome treatment
- with Fiber Sheet
  (Fiber Sheet comes only with standard grease.)
- with rail mounting hole caps
- with bellows (refer to page A-16)
- symbol for grease
  blank: standard grease
  KGL: lithium-based grease
  KGU: urea-based grease
  KGF: anti-fretting grease
  GK: K-grease
  refer to page Eng-39~

※The symbol for the number of axes does not mean the number of rails ordered.

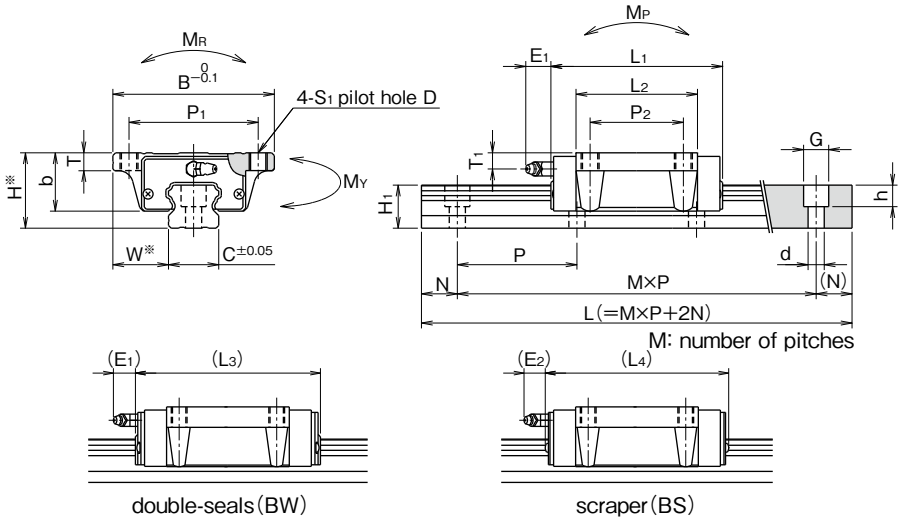

※Please refer to page A-44 for accuracy.

part number	assembly dimensions H mm	W mm	block dimensions B mm	L1 mm	L2 mm	L3 mm	L4 mm	P1 mm	P2 mm	S1	D mm	T mm	b mm	E1 mm	E2 mm
SGL15HTE	24	16	47	56.5	38.5	62.7	63.1	38	30	M5	4.4	7.5	19.7	6	5.4
SGL20HTE	30	21.5	63	71.6	53.2	77.8	78.2	53	40	M6	5.4	10.5	24	12	11
SGL25HTE	36	23.5	70	80	59	86.4	87.2	57	45	M8	6.8	12.5	29		
SGL30HTE	42	31	90	95.7	67.7	104.3	103.3	72	52	M10	8.5	10	32.5		
SGL35HTE	48	33	100	109	78	117.6	116.6	82	62			13	38		
SGL45HTE	60	37.5	120	139	102	147.5	148	100	80	M12	10.5	15	50	15	15

T1 mm	grease fitting	guide rail dimensions H1 mm	C mm	d×G×h mm	N mm	P mm	basic load rating dynamic C kN	static Co kN	allowable static moment MP N・m	MY N・m	MR N・m	mass block kg	guide rail kg/m	block size
5	pressed fitting	13.5	15	4.5×7.5×5.3	20	60	10.6	16.2	100	100	127	0.2	1.3	**15**
8	B-M6F	16	20	6×9.5×8.5			18.4	27.5	227	227	296	0.4	2.1	**20**
9.5		20	23	7×11×9			24.8	36.3	335	335	437	0.6	3.0	**25**
9		24	28	9×14×12		80	33.6	49.2	529	529	716	1.0	4.6	**30**
8.5		27.5	34				46.7	64.8	796	796	1,188	1.5	6.2	**35**
10	B-PT1/8	36.5	45	14×20×17	22.5	105	74.8	101.2	1,553	1,553	2,312	3.1	10.5	**45**

1kN≒102kgf 1N・m≒0.102kgf・m

part number	standard rail length L mm																maximum length mm
SGL15	160	220	280	340	400	460	520	580	640	700	760	820	880	940	1,000	1,120	2,000
SGL20	220	280	340	400	460	520	580	640	700	760	820	880	940	1,000	1,120	1,240	3,000
SGL25	220	280	340	400	460	520	580	640	700	760	820	880	940	1,000	1,120	1,240	3,000
SGL30	280	360	440	520	600	680	760	840	920	1,000	1,080	1,160	1,240	1,320	1,400	1,480	3,000
SGL35	280	360	440	520	600	680	760	840	920	1,000	1,080	1,160	1,240	1,320	1,400	1,480	3,000
SGL45	570	675	780	885	990	1,095	1,200	1,305	1,410	1,515	1,620	1,725	1,830	1,935	2,040	2,145	3,000

Rails exceeding the maximum specified length may be fabricated if joints are used. Please contact NB for assistance.

www.bergab.ru Берг АБ bergab@ya.ru Тел. (495)-228-06-21, факс (495) 223-3071

www.bergab.ru Берг АБ bergab@ya.ru Тел. (495)-228-06-21, факс (495) 223-3071

SGL-HYE TYPE

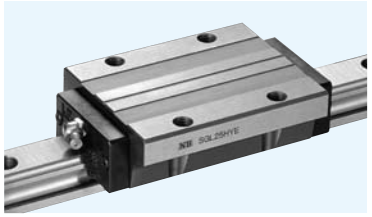

part number structure

example **SGL 15 HYE B 2 T1 - 589 P / W2 FS LB F J - KGL**

- SGL type
- size
- block style
- seal (refer to page A-14)
  blank: with side-seals
  B: with side-seals + under-seals
  BW: with double-seals + under-seals
  BS: B + scraper
- number of blocks attached to one rail
- preload symbol
  blank: standard
  T1: light
  T2: medium
- total length of rail
- accuracy grade
  blank: standard
  H: high
  P: precision
- symbol for number of axes※
  blank: single axis
  W2: 2 parallel axes
  W3: 3 parallel axes
- with low temperature black chrome treatment
- with Fiber Sheet
  (Fiber Sheet comes only with standard grease.)
- with rail mounting hole caps
- with bellows (refer to page A-16)
- symbol for grease
  blank: standard grease
  KGL: lithium-based grease
  KGU: urea-based grease
  KGF: anti-fretting grease
  GK: K-grease
  refer to page Eng-39~

※The symbol for the number of axes does not mean the number of rails ordered.

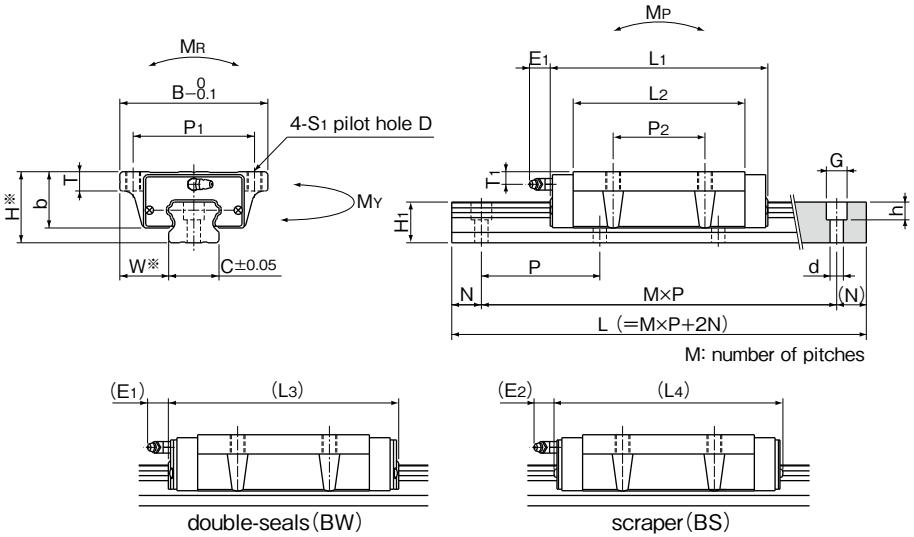

※Please refer to page A-44 for accuracy.

part number	assembly dimensions H mm	W mm	block dimensions B mm	L1 mm	L2 mm	L3 mm	L4 mm	P1 mm	P2 mm	S1	D mm	T mm	b mm	E1 mm	E2 mm
SGL15HYE	24	16	47	79	61	85.2	85.6	38	30	M5	4.4	7.5	19.7	6	5.4
SGL20HYE	30	21.5	63	96	77.6	102.2	102.6	53	40	M6	5.4	10.5	24	12	11
SGL25HYE	36	23.5	70	109	88	115.4	116.2	57	45	M8	6.8	12.5	29		
SGL30HYE	42	31	90	129	101	137.6	136.6	72	52	M10	8.5	10	32.5		
SGL35HYE	48	33	100	147	116	155.6	154.6	82	62			13	38		
SGL45HYE	60	37.5	120	171	134	179.5	180	100	80	M12	10.5	15	50	15	15

T1 mm	grease fitting	guide rail dimensions H1 mm	C mm	d×G×h mm	N mm	P mm	basic load rating dynamic C kN	static Co kN	allowable static moment MP N・m	MY N・m	MR N・m	mass block kg	guide rail kg/m	block size
5	pressed fitting	13.5	15	4.5×7.5×5.3	20	60	14.6	25.6	238	238	200	0.3	1.3	**15**
8	B-M6F	16	20	6×9.5×8.5			23.9	40.2	467	467	432	0.7	2.1	**20**
9.5		20	23	7×11×9			32.8	54.5	723	723	655	1.0	3.0	**25**
9		24	28	9×14×12		80	44.6	73.8	1,144	1,144	1,074	1.5	4.6	**30**
8.5		27.5	34				61.9	97.2	1,722	1,722	1,782	2.2	6.2	**35**
10	B-PT1/8	36.5	45	14×20×17	22.5	105	91.4	134.9	2,681	2,681	3,082	4.0	10.5	**45**

1kN≒102kgf 1N・m≒0.102kgf・m

part number	standard rail length L mm																maximum length mm
SGL15	160	220	280	340	400	460	520	580	640	700	760	820	880	940	1,000	1,120	2,000
SGL20	220	280	340	400	460	520	580	640	700	760	820	880	940	1,000	1,120	1,240	3,000
SGL25	220	280	340	400	460	520	580	640	700	760	820	880	940	1,000	1,120	1,240	3,000
SGL30	280	360	440	520	600	680	760	840	920	1,000	1,080	1,160	1,240	1,320	1,400	1,480	3,000
SGL35	280	360	440	520	600	680	760	840	920	1,000	1,080	1,160	1,240	1,320	1,400	1,480	3,000
SGL45	570	675	780	885	990	1,095	1,200	1,305	1,410	1,515	1,620	1,725	1,830	1,935	2,040	2,145	3,000

Rails exceeding the maximum specified length may be fabricated if joints are used. Please contact NB for assistance.

www.bergab.ru Берг АБ bergab@ya.ru Тел. (495)-228-06-21, факс (495) 223-3071

www.bergab.ru Берг АБ bergab@ya.ru Тел. (495)-228-06-21, факс (495) 223-3071

SGL-HTEX TYPE

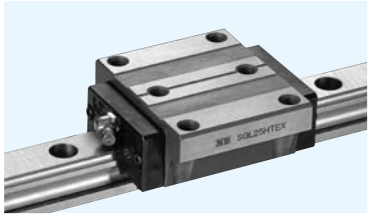

part number structure

example **SGL 15 HTEX B 2 T1 - 589 P / W2 FS LB F J - KGL**

- SGL type
- size
- block style
- seal (refer to page A-14)
  blank: with side-seals
  B: with side-seals + under-seals
  BW: with double-seals + under-seals
  BS: B + scraper
- number of blocks attached to one rail
- preload symbol
  blank: standard
  T1: light
  T2: medium
- total length of rail
- accuracy grade
  blank: standard
  H: high
  P: precision
- symbol for number of axes※
  blank: single axis
  W2: 2 parallel axes
  W3: 3 parallel axes
- with Fiber Sheet
  (Fiber Sheet comes only with standard grease.)
- with low temperature black chrome treatment
- with rail mounting hole caps
- with bellows (refer to page A-16)
- symbol for grease
  blank: standard grease
  KGL: lithium-based grease
  KGU: urea-based grease
  KGF: anti-fretting grease
  GK: K-grease
  refer to page Eng-39~

※The symbol for the number of axes does not mean the number of rails ordered.

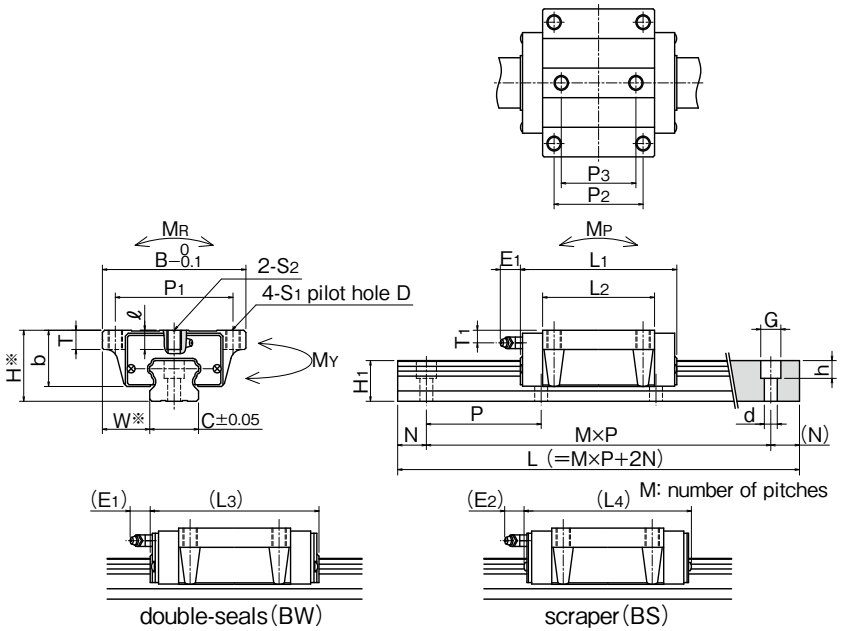

※Please refer to page A-44 for accuracy.

part number	assembly dimensions H mm	W mm	block dimensions B mm	L1 mm	L2 mm	L3 mm	L4 mm	P1 mm	P2 mm	S1	D mm	T mm	P3 mm	S2	ℓ mm	b mm
SGL15HTEX	24	16	47	56.5	38.5	62.7	63.1	38	30	M5	4.4	7.5	26	M5	6	19.7
SGL20HTEX	30	21.5	63	71.6	53.2	77.8	78.2	53	40	M6	5.4	10.5	35	M6	8	24
SGL25HTEX	36	23.5	70	80	59	86.4	87.2	57	45	M8	6.8	12.5	40	M8	10	29
SGL30HTEX	42	31	90	95.7	67.7	104.3	103.3	72	52	M10	8.5	10	44	M10	10	32.5
SGL35HTEX	48	33	100	109	78	117.6	116.6	82	62			13	52		13	38
SGL45HTEX	60	37.5	120	139	102	147.5	148	100	80	M12	10.5	15	60	M12	14	50

E1 mm	E2 mm	T1 mm	grease fitting	guide rail dimensions H1 mm	C mm	d×G×h mm	N mm	P mm	basic load rating dynamic C kN	static Co kN	allowable static moment MP N・m	MY N・m	MR N・m	mass block kg	guide rail kg/m	block size
6	5.4	5	pressed fitting	13.5	15	4.5×7.5×5.3	20	60	10.6	16.2	100	100	127	0.2	1.3	**15**
12	11	8	B-M6F	16	20	6×9.5×8.5			18.4	27.5	227	227	296	0.4	2.1	**20**
		9.5		20	23	7×11×9			24.8	36.3	335	335	437	0.6	3.0	**25**
		9		24	28	9×14×12		80	33.6	49.2	529	529	716	1.0	4.6	**30**
		8.5		27.5	34				46.7	64.8	796	796	1,188	1.5	6.2	**35**
15	15	10	B-PT1/8	36.5	45	14×20×17	22.5	105	74.8	101.2	1,553	1,553	2,312	3.1	10.5	**45**

1kN≒102kgf 1N・m≒0.102kgf・m

part number	standard rail length L mm																maximum length mm
SGL15	160	220	280	340	400	460	520	580	640	700	760	820	880	940	1,000	1,120	2,000
SGL20	220	280	340	400	460	520	580	640	700	760	820	880	940	1,000	1,120	1,240	3,000
SGL25	220	280	340	400	460	520	580	640	700	760	820	880	940	1,000	1,120	1,240	3,000
SGL30	280	360	440	520	600	680	760	840	920	1,000	1,080	1,160	1,240	1,320	1,400	1,480	3,000
SGL35	280	360	440	520	600	680	760	840	920	1,000	1,080	1,160	1,240	1,320	1,400	1,480	3,000
SGL45	570	675	780	885	990	1,095	1,200	1,305	1,410	1,515	1,620	1,725	1,830	1,935	2,040	2,145	3,000

Rails exceeding the maximum specified length may be fabricated if joints are used. Please contact NB for assistance.

www.bergab.ru Берг АБ bergab@ya.ru Тел. (495)-228-06-21, факс (495) 223-3071

www.bergab.ru Берг АБ bergab@ya.ru Тел. (495)-228-06-21, факс (495) 223-3071

GL-F TYPE

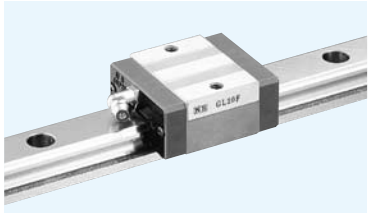

part number structure

example **GL 15 F B 2 T1 - 589 D P / W2 LB F J - KGL**

- GL type
- size
- block style
- seal (refer to page A-14)
  - B (standard): with side-seals + under-seals
  - BW: with double-seals + under-seals
  - BS: B + scraper
- number of blocks attached to one rail
- preload symbol
  - blank: standard
  - T1: light
  - T2: medium
- total length of rail
- size of rail installation hole (D type rail is available only for GL 15)
- accuracy grade
  - blank: standard
  - H: high
  - P: precision
- symbol for number of axes※
  - blank: single axis
  - W2: 2 parallel axes
  - W3: 3 parallel axes
- with low temperature black chrome treatment
- with rail mounting hole caps
- with bellows (refer to page A-16)
- symbol for grease
  - blank: standard grease
  - KGL: lithium-based grease
  - KGU: urea-based grease
  - KGF: anti-fretting grease
  - GK: K-grease
  - refer to page Eng-39~
  - Fiber Sheet comes only with standard grease.

※The symbol for the number of axes does not mean the number of rails ordered.

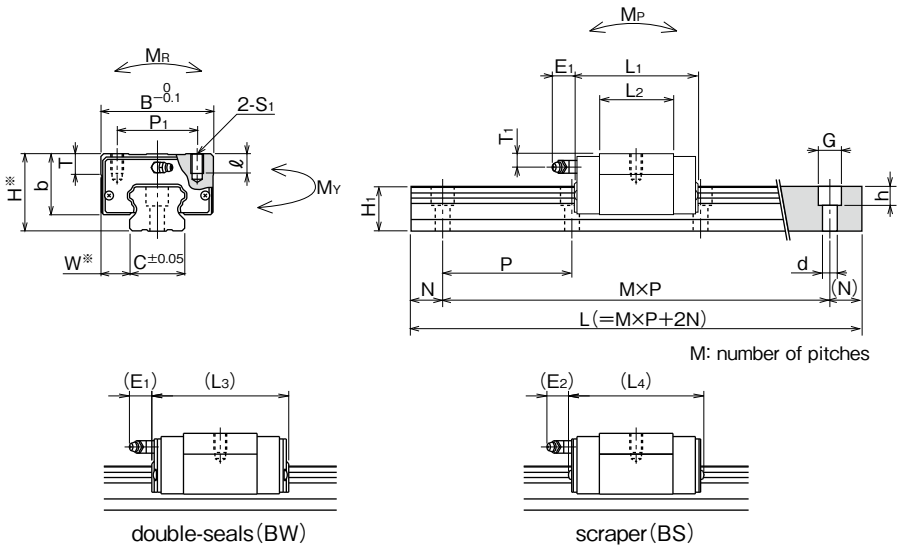

※Please refer to page A-44 for accuracy.

part number	assembly dimensions H mm	W mm	block dimensions B mm	L1 mm	L2 mm	L3 mm	L4 mm	P1 mm	S1	ℓ mm	T mm	b mm	E1 mm	E2 mm
GL15F GL15F-D	24	9.5	34	40.7	22.7	46.9	47.3	26	M4	7	6	19.5	6	5.4
GL20F	28	11	42	47.9	29.5	54.1	54.5	32	M5	8	7.5	22	12	11
GL25F	33	12.5	48	58.7	37.7	65.1	65.9	35	M6	9	8	26		
GL30F	42	16	60	68	40	76.6	75.6	40	M8	12	9	32.5		
GL35F	48	18	70	77	46	85.6	84.6	50			13	38		

T1 mm	grease fitting	guide rail dimensions H1 mm	C mm	d×G×h mm	N mm	P mm	basic load rating dynamic C kN	static Co kN	allowable static moment MP / MP2 N・m	MY / MY2 N・m	MR N・m	mass block kg	guide rail kg/m	block size
5	pressed fitting	13.5	15	3.5×6×4.5 4.5×7.5×5.3	20	60	7.29	9.46	37 252	37 252	74	0.1	1.3	15
6	B-M6F	16	20	6×9.5×8.5			11.91	14.81	72 447	72 447	159	0.2	2.1	20
6.5		20	23	7×11×9			17.0	21.2	123 751	123 751	255	0.3	3.0	25
9		24	28			80	23.0	28.7	195 1,263	195 1,263	418	0.5	4.6	30
8.5		27.5	34	9×14×12			32.0	37.8	294 1,873	294 1,873	693	0.8	6.2	35

1kN≒102kgf 1N・m≒0.102kgf・m

part number	standard rail length L mm															
GL15	160	220	280	340	400	460	520	580	640	700	760	820	880	940	1,000	1,120
GL20	220	280	340	400	460	520	580	640	700	760	820	880	940	1,000	1,120	1,240
GL25	220	280	340	400	460	520	580	640	700	760	820	880	940	1,000	1,120	1,240
GL30	280	360	440	520	600	680	760	840	920	1,000	1,080	1,160	1,240	1,320	1,400	1,480
GL35	280	360	440	520	600	680	760	840	920	1,000	1,080	1,160	1,240	1,320	1,400	1,480

								maximum length mm
1,240	1,360	1,480						2,000
1,360	1,480	1,600	1,660	1,720	1,840	1,960		3,000
1,360	1,480	1,600	1,660	1,720	1,840	1,960		3,000
1,640	1,720	1,800	1,880	1,960				3,000
1,640	1,720	1,800	1,880	1,960				3,000

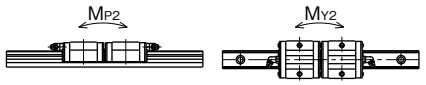

When two blocks are used in close contact.

www.bergab.ru Берг АБ bergab@ya.ru Тел. (495)-228-06-21, факс (495) 223-3071

www.bergab.ru Берг АБ bergab@ya.ru Тел. (495)-228-06-21, факс (495) 223-3071

GL-TF TYPE

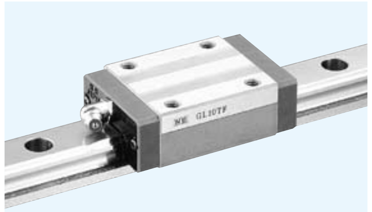

part number structure

example GL 15 TF B 2 T1 - 589 D P / W2 LB F J - KGL

- GL type
- size
- block style
- seal (refer to page A-14)
  - **B(standard)**: with side-seals + under-seals
  - **BW**: with double-seals + under-seals
  - **BS**: B + scraper
- number of blocks attached to one rail
- preload symbol
  - **blank**: standard
  - **T1**: light
  - **T2**: medium
- total length of rail
- size of rail installation hole (D type rail is available only for GL 15)
- accuracy grade
  - **blank**: standard
  - **H**: high
  - **P**: precision
- symbol for number of axes※
  - **blank**: single axis
  - **W2**: 2 parallel axes
  - **W3**: 3 parallel axes
- with low temperature black chrome treatment
- with rail mounting hole caps
- with bellows (refer to page A-16)
- symbol for grease
  - **blank**: standard grease
  - **KGL**: lithium-based grease
  - **KGU**: urea-based grease
  - **KGF**: anti-fretting grease
  - **GK**: K-grease
  - refer to page Eng-39～ Fiber Sheet comes only with standard grease.

※The symbol for the number of axes does not mean the number of rails ordered.

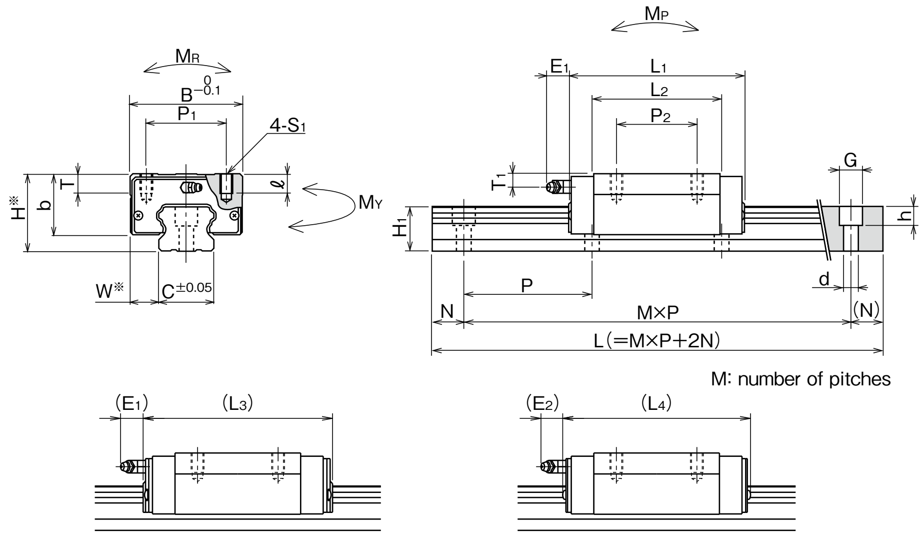

double-seals (BW)　　scraper (BS)

※Please refer to page A-44 for accuracy.

part number	assembly dimensions H mm	assembly dimensions W mm	block dimensions B mm	L1 mm	L2 mm	L3 mm	L4 mm	P1 mm	P2 mm	S1	ℓ mm	T mm	b mm	E1 mm	E2 mm
GL15TF GL15TF-D	24	9.5	34	56.5	38.5	62.7	63.1	26	26	M4	7	6	19.5	6	5.4
GL20TF	28	11	42	65.8	47.4	72.0	72.4	32	32	M5	8	7.5	22	12	11
GL25TF	33	12.5	48	80	59	86.4	87.2	35	35	M6	9	8	26	12	11
GL30TF	42	16	60	95.7	67.7	104.3	103.3	40	40	M8	12	9	32.5	12	11
GL35TF	48	18	70	109	78	117.6	116.6	50	50	M8	12	13	38	12	11

T1 mm	grease fitting	guide rail dimensions H1 mm	C mm	d×G×h mm	N mm	P mm	basic load rating dynamic C kN	static Co kN	allowable static moment MP N・m	MY N・m	MR N・m	mass block kg	guide rail kg/m	block size
5	pressed fitting	13.5	15	3.5×6×4.5 / 4.5×7.5×5.3	20	60	10.6	16.2	100	100	127	0.2	1.3	15
6	B-M6F	16	20	6×9.5×8.5	20	60	16.4	23.3	165	165	250	0.3	2.1	20
6.5	B-M6F	20	23	7×11×9	20	60	24.8	36.3	335	335	437	0.4	3.0	25
9	B-M6F	24	28	7×11×9	20	80	33.6	49.2	529	529	716	0.8	4.6	30
8.5	B-M6F	27.5	34	9×14×12	20	80	46.7	64.8	796	796	1,188	1.3	6.2	35

1kN≒102kgf　1N・m≒0.102kgf・m

part number	standard rail length L mm	maximum length mm
GL15	160 220 280 340 400 460 520 580 640 700 760 820 880 940 1,000 1,120 1,240 1,360 1,480	2,000
GL20	220 280 340 400 460 520 580 640 700 760 820 880 940 1,000 1,120 1,240 1,360 1,480 1,600 1,660 1,720 1,840 1,960	3,000
GL25	220 280 340 400 460 520 580 640 700 760 820 880 940 1,000 1,120 1,240 1,360 1,480 1,600 1,660 1,720 1,840 1,960	3,000
GL30	280 360 440 520 600 680 760 840 920 1,000 1,080 1,160 1,240 1,320 1,400 1,480 1,640 1,720 1,800 1,880 1,960	3,000
GL35	280 360 440 520 600 680 760 840 920 1,000 1,080 1,160 1,240 1,320 1,400 1,480 1,640 1,720 1,800 1,880 1,960	3,000

www.bergab.ru Берг АБ bergab@ya.ru Тел. (495)-228-06-21, факс (495) 223-3071

www.bergab.ru Берг АБ bergab@ya.ru Тел. (495)-228-06-21, факс (495) 223-3071

GL-HTF TYPE

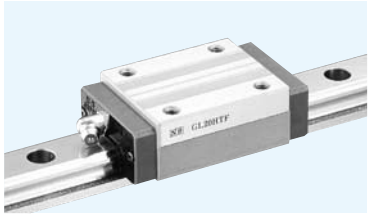

part number structure

example **GL 20 HTF B 2 T1 - 589 P / W2 LB F J - KGL**

- GL type
- size
- block style
- seal (refer to page A-14)
  B (standard): with side-seals + under-seals
  BW: with double-seals + under-seals
  BS: B + scraper
- number of blocks attached to one rail
- preload symbol
  blank: standard
  T1: light
  T2: medium
- total length of rail
- accuracy grade
  blank: standard
  H: high
  P: precision
- symbol for number of axes※
  blank: single axis
  W2: 2 parallel axes
  W3: 3 parallel axes
- with low temperature black chrome treatment
- with rail mounting hole caps
- with bellows (refer to page A-16)
- symbol for grease
  blank: standard grease
  KGL: lithium-based grease
  KGU: urea-based grease
  KGF: anti-fretting grease
  GK: K-grease
  refer to page Eng-39~
  Fiber Sheet comes only with standard grease.

※The symbol for the number of axes does not mean the number of rails ordered.

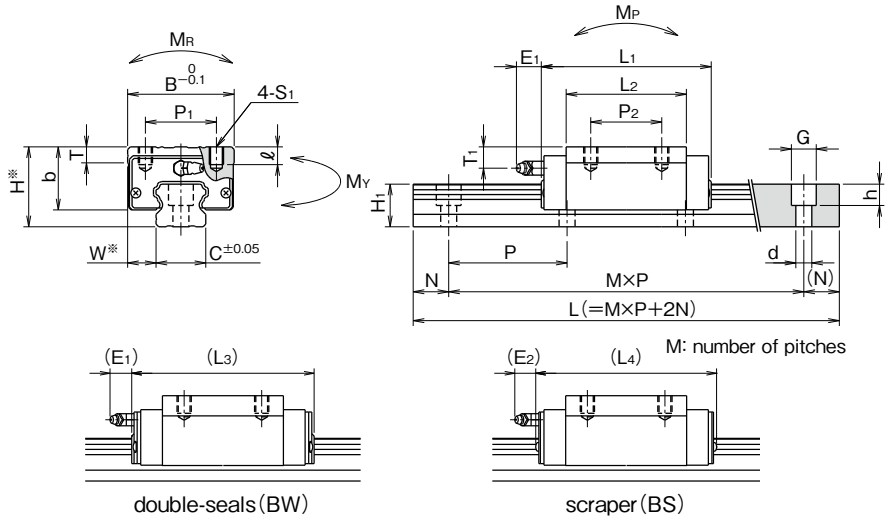

※Please refer to page A-44 for accuracy.

part number	assembly dimensions H mm	W mm	block dimensions B mm	L1 mm	L2 mm	L3 mm	L4 mm	P1 mm	P2 mm	S1	ℓ mm	T mm	b mm	E1 mm	E2 mm
GL15HTF	28	9.5	34	56.5	38.5	62.7	63.1	26	26	M4	5	6	23.7	6	5.4
GL20HTF	30	12	44	71.6	53.2	77.8	78.2	32	36	M5	6	9.5	24	12	11
GL25HTF	40	12.5	48	80	59	86.4	87.2	35	35	M6	8	9	33		
GL30HTF	45	16	60	95.7	67.7	104.3	103.3	40	40	M8	10		35.5		
GL35HTF	55	18	70	109	78	117.6	116.6	50	50		12	13	45		
GL45HTF	70	20.5	86	139	102	147.5	148	60	60	M10	17	15	60	15	15

part number	T1 mm	grease fitting	guide rail dimensions H1 mm	C mm	d×G×h mm	N mm	P mm	basic load rating dynamic C kN	static Co kN	allowable static moment MP N・m	MY N・m	MR N・m	mass block kg	guide rail kg/m	block size
GL15HTF	9	pressed fitting	13.5	15	4.5×7.5×5.3	20	60	10.6	16.2	100	100	127	0.2	1.3	**15**
GL20HTF	8	B-M6F	16	20	6×9.5×8.5			18.4	27.5	227	227	296	0.4	2.1	**20**
GL25HTF	13.5		20	23	7×11×9			24.8	36.3	335	335	437	0.6	3.0	**25**
GL30HTF	12		24	28	9×14×12		80	33.6	49.2	529	529	716	0.9	4.6	**30**
GL35HTF	15.5		27.5	34				46.7	64.8	796	796	1,188	1.5	6.2	**35**
GL45HTF	20	B-PT1/8	36.5	45	14×20×17	22.5	105	74.8	101.2	1,553	1,553	2,312	3.1	10.5	**45**

1kN≒102kgf 1N・m≒0.102kgf・m

part number	standard rail length L mm																maximum length mm
GL15	160	220	280	340	400	460	520	580	640	700	760	820	880	940	1,000	1,120	2,000
GL20	220	280	340	400	460	520	580	640	700	760	820	880	940	1,000	1,120	1,240	3,000
GL25	220	280	340	400	460	520	580	640	700	760	820	880	940	1,000	1,120	1,240	3,000
GL30	280	360	440	520	600	680	760	840	920	1,000	1,080	1,160	1,240	1,320	1,400	1,480	3,000
GL35	280	360	440	520	600	680	760	840	920	1,000	1,080	1,160	1,240	1,320	1,400	1,480	3,000
GL45	570	675	780	885	990	1,095	1,200	1,305	1,410	1,515	1,620	1,725	1,830	1,935	2,040	2,145	3,000

www.bergab.ru Берг АБ bergab@ya.ru Тел. (495)-228-06-21, факс (495) 223-3071

www.bergab.ru Берг АБ bergab@ya.ru Тел. (495)-228-06-21, факс (495) 223-3071

GL-E TYPE

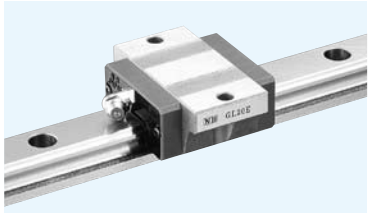

part number structure

example **GL 15 E B 2 T1 - 589 D P / W2 LB F J - KGL**

- GL type
- size
- block style
- seal (refer to page A-14)
  - **B (standard)**: with side-seals + under-seals
  - **BW**: with double-seals + under-seals
  - **BS**: B + scraper
- number of blocks attached to one rail
- preload symbol
  - **blank**: standard
  - **T1**: light
  - **T2**: medium
- total length of rail
- size of rail installation hole (D type rail is available only for GL 15)
- accuracy grade
  - **blank**: standard
  - **H**: high
  - **P**: precision
- symbol for number of axes※
  - **blank**: single axis
  - **W2**: 2 parallel axes
  - **W3**: 3 parallel axes
- with low temperature black chrome treatment
- with rail mounting hole caps
- with bellows (refer to page A-16)
- symbol for grease
  - **blank**: standard grease
  - **KGL**: lithium-based grease
  - **KGU**: urea-based grease
  - **KGF**: anti-fretting grease
  - **GK**: K-grease
  - refer to page Eng-39~
  - Fiber Sheet comes only with standard grease.

※The symbol for the number of axes does not mean the number of rails ordered.

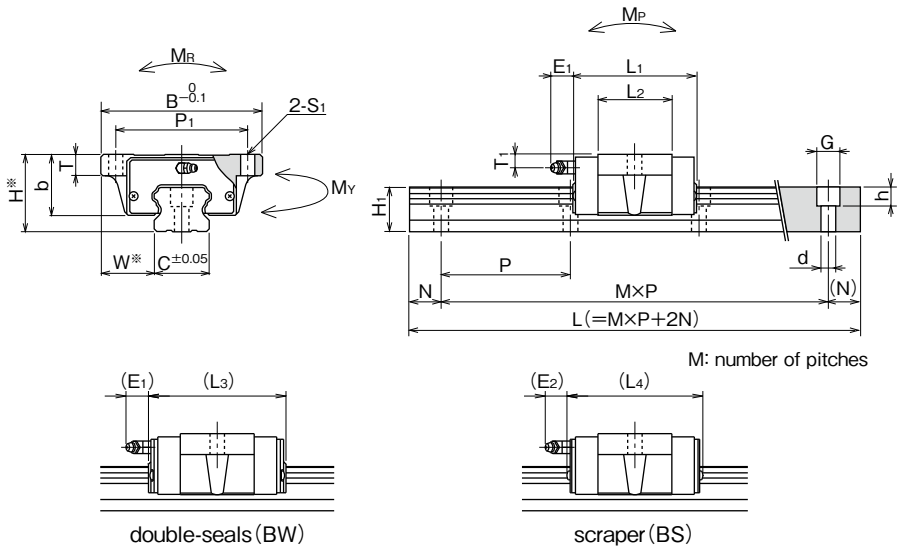

※Please refer to page A-44 for accuracy.

part number	assembly dimensions H mm	W mm	block dimensions B mm	L1 mm	L2 mm	L3 mm	L4 mm	P1 mm	S1 mm	T mm	b mm	E1 mm	E2 mm
GL15E GL15E-D	24	18.5	52	40.7	22.7	46.9	47.3	41	4.5	7	19.5	6	5.4
GL20E	28	19.5	59	47.9	29.5	54.1	54.5	49	5.5	9	22	12	11
GL25E	33	25	73	58.7	37.7	65.1	65.9	60	7	10	26		
GL30E	42	31	90	68	40	76.6	75.6	72	9		32.5		
GL35E	48	33	100	77	46	85.6	84.6	82		13	38		

part number	T1 mm	grease fitting	guide rail dimensions H1 mm	C mm	d×G×h mm	N mm	P mm	basic load rating dynamic C kN	static Co kN	allowable static moment MP / MP2 N・m	MY / MY2 N・m	MR N・m	mass block kg	guide rail kg/m	block size
GL15E GL15E-D	5	pressed fitting	13.5	15	3.5×6×4.5 4.5×7.5×5.3	20	60	7.29	9.46	37 252	37 252	74	0.1	1.3	15
GL20E	6	B-M6F	16	20	6×9.5×8.5			11.91	14.81	72 447	72 447	159	0.2	2.1	20
GL25E	6.5		20	23	7×11×9			17.0	21.2	123 751	123 751	255	0.4	3.0	25
GL30E	9		24	28			80	23.0	28.7	195 1,263	195 1,263	418	0.6	4.6	30
GL35E	8.5		27.5	34	9×14×12			32.0	37.8	294 1,873	294 1,873	693	0.9	6.2	35

1kN≒102kgf 1N・m≒0.102kgf・m

part number	standard rail length L mm															
GL15	160	220	280	340	400	460	520	580	640	700	760	820	880	940	1,000	1,120
GL20	220	280	340	400	460	520	580	640	700	760	820	880	940	1,000	1,120	1,240
GL25	220	280	340	400	460	520	580	640	700	760	820	880	940	1,000	1,120	1,240
GL30	280	360	440	520	600	680	760	840	920	1,000	1,080	1,160	1,240	1,320	1,400	1,480
GL35	280	360	440	520	600	680	760	840	920	1,000	1,080	1,160	1,240	1,320	1,400	1,480

								maximum length mm
1,240	1,360	1,480						2,000
1,360	1,480	1,600	1,660	1,720	1,840	1,960		3,000
1,360	1,480	1,600	1,660	1,720	1,840	1,960		3,000
1,640	1,720	1,800	1,880	1,960				3,000
1,640	1,720	1,800	1,880	1,960				3,000

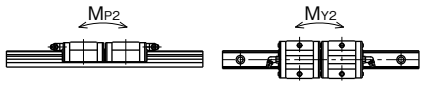

When two blocks are used in close contact.

www.bergab.ru Берг АБ bergab@ya.ru Тел. (495)-228-06-21, факс (495) 223-3071

www.bergab.ru Берг АБ bergab@ya.ru Тел. (495)-228-06-21, факс (495) 223-3071

GL-TE TYPE

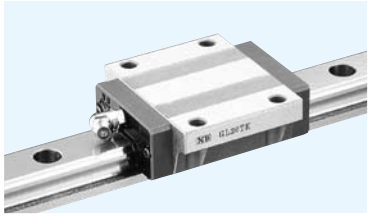

part number structure

example **GL 15 TE B 2 T1 - 589 D P / W2 LB F J - KGL**

- GL type
- size
- block style
- seal (refer to page A-14)
  - **B (standard)**: with side-seals + under-seals
  - **BW**: with double-seals + under-seals
  - **BS**: B + scraper
- number of blocks attached to one rail
- preload symbol
  - **blank**: standard
  - **T1**: light
  - **T2**: medium
- total length of rail
- size of rail installation hole (D type rail is available only for GL 15)
- accuracy grade
  - **blank**: standard
  - **H**: high
  - **P**: precision
- symbol for number of axes※
  - **blank**: single axis
  - **W2**: 2 parallel axes
  - **W3**: 3 parallel axes
- with low temperature black chrome treatment
- with rail mounting hole caps
- with bellows (refer to page A-16)
- symbol for grease
  - **blank**: standard grease
  - **KGL**: lithium-based grease
  - **KGU**: urea-based grease
  - **KGF**: anti-fretting grease
  - **GK**: K-grease
  - refer to page Eng-39~
  - Fiber Sheet comes only with standard grease.

※The symbol for the number of axes does not mean the number of rails ordered.

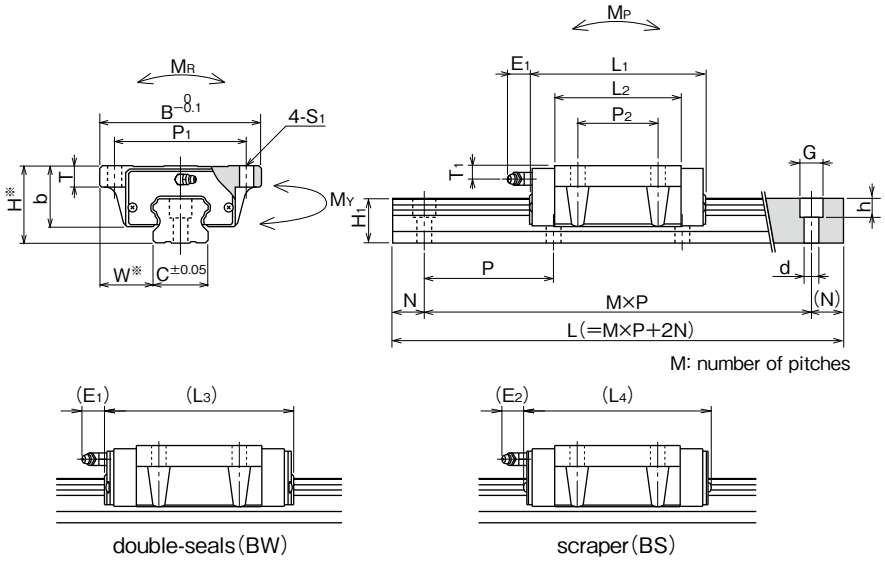

※Please refer to page A-44 for accuracy.

part number	assembly dimensions H mm	W mm	block dimensions B mm	L1 mm	L2 mm	L3 mm	L4 mm	P1 mm	P2 mm	S1 mm	T mm	b mm	E1 mm	E2 mm
GL15TE GL15TE-D	24	18.5	52	56.5	38.5	62.7	63.1	41	26	4.5	7	19.5	6	5.4
GL20TE	28	19.5	59	65.8	47.4	72.0	72.4	49	32	5.5	9	22	12	11
GL25TE	33	25	73	80	59	86.4	87.2	60	35	7	10	26		
GL30TE	42	31	90	95.7	67.7	104.3	103.3	72	40	9		32.5		
GL35TE	48	33	100	109	78	117.6	116.6	82	50		13	38		

T1 mm	grease fitting	guide rail dimensions H1 mm	C mm	d×G×h mm	N mm	P mm	basic load rating dynamic C kN	static Co kN	allowable static moment MP N・m	MY N・m	MR N・m	mass block kg	guide rail kg/m	block size
5	pressed fitting	13.5	15	3.5×6×4.5 4.5×7.5×5.3	20	60	10.6	16.2	100	100	127	0.2	1.3	15
6	B-M6F	16	20	6×9.5×8.5			16.4	23.3	165	165	250	0.3	2.1	20
6.5		20	23	7×11×9			24.8	36.3	335	335	437	0.6	3.0	25
9		24	28			80	33.6	49.2	529	529	716	1.0	4.6	30
8.5		27.5	34	9×14×12			46.7	64.8	796	796	1,188	1.5	6.2	35

1kN≒102kgf 1N・m≒0.102kgf・m

part number	standard rail length L mm																maximum length mm
GL15	160	220	280	340	400	460	520	580	640	700	760	820	880	940	1,000	1,120	1,240	1,360	1,480	2,000
GL20	220	280	340	400	460	520	580	640	700	760	820	880	940	1,000	1,120	1,240	1,360	1,480	1,600	1,660	1,720	1,840	1,960	3,000
GL25	220	280	340	400	460	520	580	640	700	760	820	880	940	1,000	1,120	1,240	1,360	1,480	1,600	1,660	1,720	1,840	1,960	3,000
GL30	280	360	440	520	600	680	760	840	920	1,000	1,080	1,160	1,240	1,320	1,400	1,480	1,640	1,720	1,800	1,880	1,960	3,000
GL35	280	360	440	520	600	680	760	840	920	1,000	1,080	1,160	1,240	1,320	1,400	1,480	1,640	1,720	1,800	1,880	1,960	3,000

www.bergab.ru Берг АБ bergab@ya.ru Тел. (495)-228-06-21, факс (495) 223-3071

www.bergab.ru Берг АБ bergab@ya.ru Тел. (495)-228-06-21, факс (495) 223-3071

GL-HTE TYPE

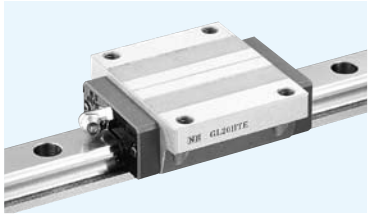

part number structure

example **GL 20 HTE B 2 T1 - 589 P / W2 LB F J - KGL**

- GL type
- size
- block style
- seal (refer to page A-14)
  B (standard): with side-seals + under-seals
  BW: with double-seals + under-seals
  BS: B + scraper
- number of blocks attached to one rail
- preload symbol
  blank: standard
  T1: light
  T2: medium
- total length of rail
- accuracy grade
  blank: standard
  H: high
  P: precision
- symbol for number of axes※
  blank: single axis
  W2: 2 parallel axes
  W3: 3 parallel axes
- with low temperature black chrome treatment
- with rail mounting hole caps
- with bellows (refer to page A-16)
- symbol for grease
  blank: standard grease
  KGL: lithium-based grease
  KGU: urea-based grease
  KGF: anti-fretting grease
  GK: K-grease
  refer to page Eng-39~
  Fiber Sheet comes only with standard grease.

※The symbol for the number of axes does not mean the number of rails ordered.

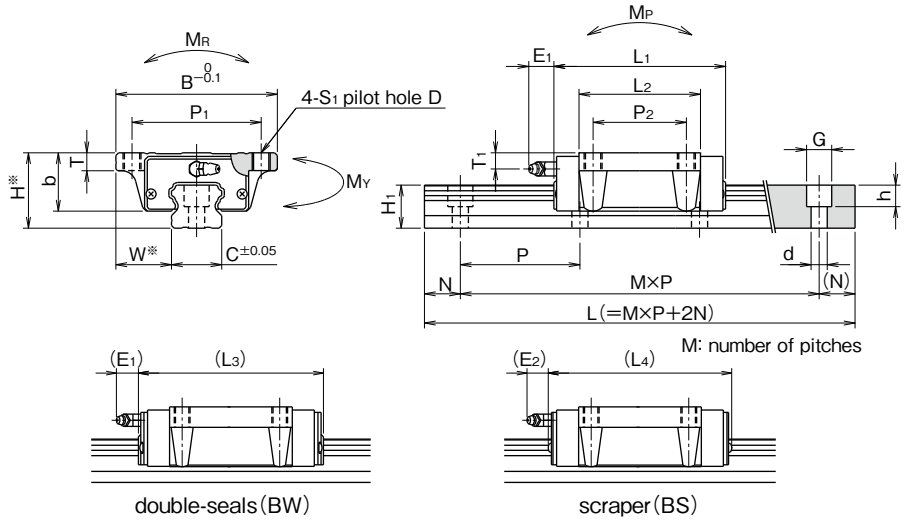

※Please refer to page A-44 for accuracy.

part number	assembly dimensions H mm	W mm	block dimensions B mm	L1 mm	L2 mm	L3 mm	L4 mm	P1 mm	P2 mm	S1	D mm	T mm	b mm	E1 mm	E2 mm
GL15HTE	24	16	47	56.5	38.5	62.7	63.1	38	30	M5	4.4	7.5	19.7	6	5.4
GL20HTE	30	21.5	63	71.6	53.2	77.8	78.2	53	40	M6	5.4	10.5	24	12	11
GL25HTE	36	23.5	70	80	59	86.4	87.2	57	45	M8	6.8	12.5	29		
GL30HTE	42	31	90	95.7	67.7	104.3	103.3	72	52	M10	8.5	10	32.5		
GL35HTE	48	33	100	109	78	117.6	116.6	82	62			13	38		
GL45HTE	60	37.5	120	139	102	147.5	148	100	80	M12	10.5	15	50	15	15

T1 mm	grease fitting	guide rail dimensions H1 mm	C mm	d×G×h mm	N mm	P mm	basic load rating dynamic C kN	static Co kN	allowable static moment MP N・m	MY N・m	MR N・m	mass block kg	guide rail kg/m	block size
5	pressed fitting	13.5	15	4.5×7.5×5.3	20	60	10.6	16.2	100	100	127	0.2	1.3	15
8	B-M6F	16	20	6×9.5×8.5			18.4	27.5	227	227	296	0.4	2.1	20
9.5		20	23	7×11×9			24.8	36.3	335	335	437	0.6	3.0	25
9		24	28	9×14×12		80	33.6	49.2	529	529	716	1.0	4.6	30
8.5		27.5	34				46.7	64.8	796	796	1,188	1.5	6.2	35
10	B-PT1/8	36.5	45	14×20×17	22.5	105	74.8	101.2	1,553	1,553	2,312	3.1	10.5	45

1kN≒102kgf 1N・m≒0.102kgf・m

part number	standard rail length L mm																maximum length mm
GL15	160	220	280	340	400	460	520	580	640	700	760	820	880	940	1,000	1,120	2,000
GL20	220	280	340	400	460	520	580	640	700	760	820	880	940	1,000	1,120	1,240	3,000
GL25	220	280	340	400	460	520	580	640	700	760	820	880	940	1,000	1,120	1,240	3,000
GL30	280	360	440	520	600	680	760	840	920	1,000	1,080	1,160	1,240	1,320	1,400	1,480	3,000
GL35	280	360	440	520	600	680	760	840	920	1,000	1,080	1,160	1,240	1,320	1,400	1,480	3,000
GL45	570	675	780	885	990	1,095	1,200	1,305	1,410	1,515	1,620	1,725	1,830	1,935	2,040	2,145	3,000

www.bergab.ru Берг АБ bergab@ya.ru Тел. (495)-228-06-21, факс (495) 223-3071

www.bergab.ru Берг АБ bergab@ya.ru Тел. (495)-228-06-21, факс (495) 223-3071

SLIDE GUIDE SGW Type

The NB slide guide SGW type is a linear motion bearing utilizing the rotational motion of ball elements along four rows of raceway grooves. Its low height and wide profile makes it suitable for single-rail applications.

STRUCTURE AND ADVANTAGES

The NB slide guide SGW type consists of a rail with four precisely machined raceway grooves and a block assembly. The block assembly consists of the main body, ball elements, retainers, and return caps.

High Load Capacity and Long Life

The raceway grooves are machined to a radius close to that of the ball elements. The larger contact area resulting in a high load capacity and a long travel life.

High Allowable Moment

Its wide profile enables it to sustain high moment loads, making it suitable for single-rail applications.

Omni-Directional Load Capacity

The ball elements are positioned at 45° contact angle so that the load capacity is equal in four directions (above, below, right and left).

Smooth Motion

The large number of effective ball elements produce a smooth rolling motion.

Anti-Corrosion Specification

The rail and block assembly can be treated with low temperature black chrome treatment to increase the corrosion resistance. This treatment is standardized with the symbol "LB", and suitable for use in clean room applications.

Dust Prevention

Side-seals are provided as standard. To improve the dust prevention characteristics, under-seals and rail mounting caps are also available.

Extension of Relubrication Period by Fiber Sheet

A lubricant-containing Fiber Sheet incorporated in the block supplies appropriate amount of lubricant to the raceway grooves, which significantly extends the lubricant replenishment interval. (refer to page A-18)

Figure A-61 Structure of SGW type Slide Guide

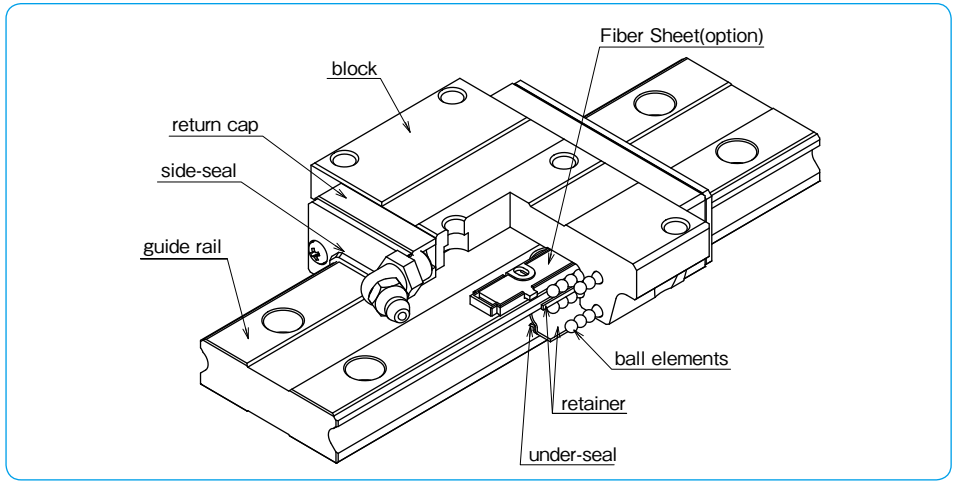

BLOCK TYPES

Two SGW block types are available depending on the mounting space and desired mounting method.

SGW-TF type P.A-82

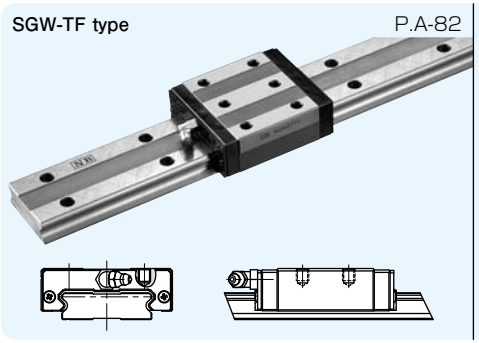

SGW-TE type P.A-84

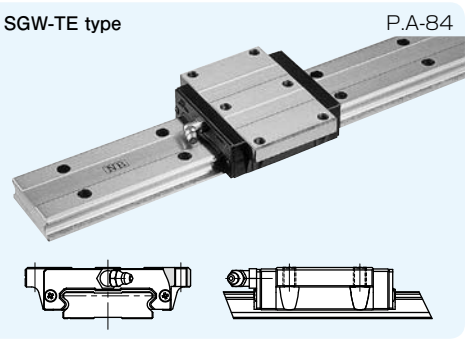

ACCURACY

Three accuracy grades are available: standard grade (blank), high grade (H), and precision grade (P).

Table A-29 Accuracy unit／mm

part number	SGW17,21			SGW27,35		
accuracy grade	standard	high	precision	standard	high	precision
accuracy symbol	blank	H	P	blank	H	P
allowable dimensional tolerance for height H	±0.1	±0.03	−0.03～0	±0.1	±0.04	−0.04～0
paired difference for height H	0.02	0.01	0.006	0.02	0.015	0.007
allowable dimensional tolerance for width W	±0.1	±0.03	−0.03～0	±0.1	±0.04	−0.04～0
paired difference for width W	0.02	0.01	0.006	0.03	0.015	0.007
Running parallelism of surface C to surface A Running parallelism of surface D to surface B	refer to Figure A-62,63					

Figure A-62 Motion Accuracy

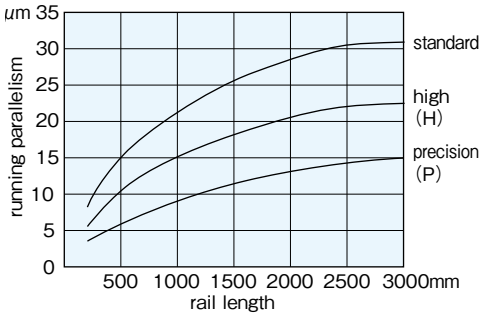

Figure A-63 Accuracy

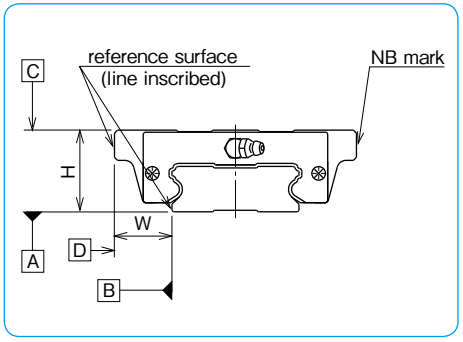

www.bergab.ru Берг АБ bergab@ya.ru Тел. (495)-228-06-21, факс (495) 223-3071

www.bergab.ru Берг АБ bergab@ya.ru Тел. (495)-228-06-21, факс (495) 223-3071

PRELOAD

Three levels of preload are available for SGW slide guides: standard (blank), light (T1), and medium (T2).

Table A-30 Preload Call Out and Radial Clearance unit／μm

preload	standard	light	medium
symbol	blank	T1	T2
SGW17	−3～+2	− 7～−3	−
SGW21	−4～+2	− 8～−4	−
SGW27	−5～+2	−11～−5	−
SGW35	−8～+4	−18～−8	−28～−18

Table A-31 Operating Conditions and Preload

preload	symbol	operating conditions
standard	blank	minute vibration is applied. accurate motion is required. moment is applied in a given direction.
light	T1	light vibration is applied. light torsional load is applied. moment is applied.
medium	T2	shock and vibration are applied. over-hang load is applied. torsional load is applied.

RAIL LENGTH

Slide guides with most commonly used lengths are available as standard. For slide guides with a non-standard length, unless otherwise specified, the distance from one end of the rail to the first hole center (N) will be within the range listed in Table A-32, satisfying the following equation.

$$L = M \cdot P + 2N$$

L: length (mm) M: number of pitches P: hole pitch (mm)
N: distance from the end of the rail to the first hole center (mm)

Table A-32 N Dimension unit/mm

part number	N and over	N less than	L max.
SGW17	8	28	2,000
SGW21		33	
SGW27		38	3,000
SGW35	12	52	

Figure A-64 Rail

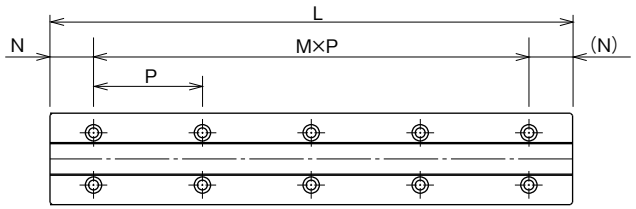

MOUNTING

Slide guides are generally mounted by pushing the reference surface of the rail and block against the shoulder of the mounting surface. To avoid interference between the shoulder and the corner of the rail or block, the recommended dimensions are listed in Table A-34.
The screws to fasten the rail should be tightened to an equal torque using a torque wrench in order to secure the motion accuracy. The recommended torque values are given in Table A-33. Please adjust the torque depending on the operating conditions.

Figure A-65 Mounting Reference Surface Profile

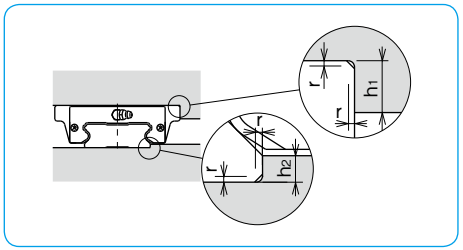

Table A-33 Recommended Torque unit／N・m

size	M4	M6
recommended torque	3.2	11.2

(for alloy steel screw)

Table A-34 Shoulder Height and Radius Dimensions unit/mm

part number	h_1	h_2	$r_{max.}$
SGW17	4	2	0.4
SGW21	5	2.5	
SGW27			
SGW35		3.5	0.8

GREASE FITTING

A grease fitting is attached to the return cap of SGW type guide block for lubrication purposes. Unless otherwise specified, the orientation of the grease fitting is as shown in Figure A-66. When more than 2 blocks are used on one rail, please specify the grease fitting orientation.

Figure A-66 Grease Fitting Orientation

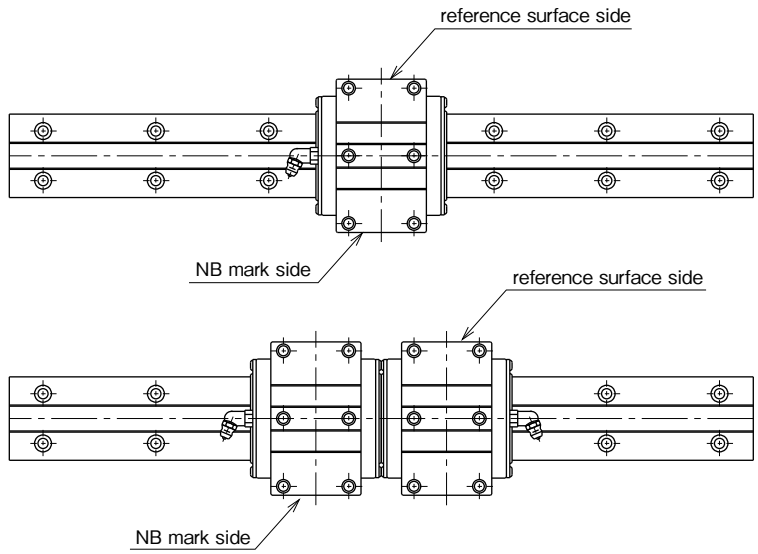

www.bergab.ru Берг АБ bergab@ya.ru Тел. (495)-228-06-21, факс (495) 223-3071

www.bergab.ru Берг АБ bergab@ya.ru Тел. (495)-228-06-21, факс (495) 223-3071

SGW-TF TYPE

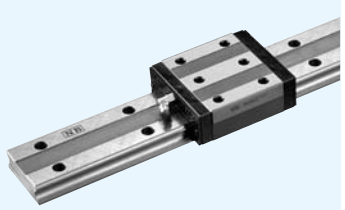

part number structure

example **SGW 21 TF B 2 T1 - 589 P / W2 FS LB F - KGL**

- SGW type
- size
- TF typeblock
- seal (refer to page A-14)
  blank: with side-seals
  B: with side-seals + under-seals
- number of blocks attached to one rail
- preload symbol
  blank: standard
  T1: light
  T2: medium
- total length of rail
- accuracy grade
  blank: standard
  H: high
  P: precision
- symbol for number of axes※
  blank: single axis
  W2: 2 parallel axes
  W3: 3 parallel axes
- with Fiber Sheet
  (Fiber Sheet comes only with standard grease.)
- with low temperature black chrome treatment
- with rail mounting hole caps
- symbol for grease
  blank: standard grease
  KGL: lithium-based grease
  KGU: urea-based grease
  KGF: anti-fretting grease
  GK: K-grease
  refer to page Eng-39~

※The symbol for the number of axes does not mean the number of rails ordered.

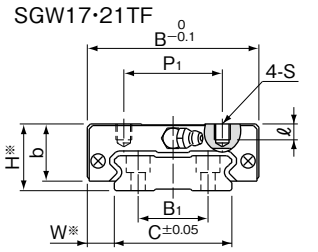

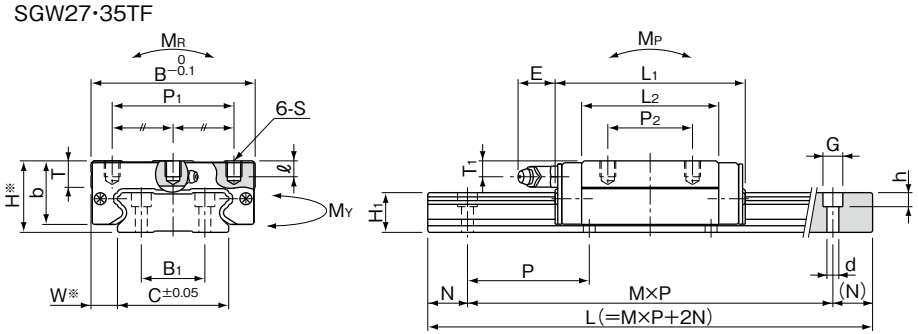

※Please refer to page A-79 for accuracy.

M: number of pitches

part number	assembly dimensions H mm	W mm	block dimensions B mm	L_1 mm	L_2 mm	P_1 mm	P_2 mm	S	ℓ mm	T mm	b mm	E mm	T_1 mm	grease fitting
SGW17TF	17	8.5	50	51	33.6	29	15	M4	4	—	14.5	2.5	4	pressed fitting
SGW21TF	21	8.5	54	58	40	31	19	M5	5	—	18	12	4.5	B-M6F
SGW27TF	27	10	62	71.8	51.8	46	32	M6	6	10	24		6	
SGW35TF	35	15.5	100	106.6	77.6	76	50	M8	8	14	31		8	

part number	guide rail dimensions H_1 mm	C mm	B_1 mm	d×G×h mm	N mm	P mm	basic load rating dynamic C kN	static Co kN	allowable static moment M_P N・m	M_Y N・m	M_R N・m	mass block kg	guide rail kg/m	block size
SGW17TF	9	33	18	4.5×7.5×5.3	15	40	4.8	8.6	43	43	161	0.13	2.05	**17**
SGW21TF	11	37	22			50	7	12	72	72	253	0.20	2.84	**21**
SGW27TF	15	42	24		20	60	13	22	172	172	496	0.38	4.43	**27**
SGW35TF	19	69	40	7×11×9		80	31	49	579	579	1,855	1.16	9.32	**35**

1kN≒102kgf 1N・m≒0.102kgf・m

part number	standard rail length L mm																	maximum length mm
SGW17	110	150	190	230	270	310	350	390	430	510	590	670	750	830	950	1,070	1,190	1,310	2,000
SGW21	130	180	230	280	330	380	430	480	530	630	730	830	930	1,030	1,180	1,330	1,480		2,000
SGW27	160	220	280	340	400	460	520	640	760	880	1,000	1,180	1,360	1,540	1,720	1,900			3,000
SGW35	280	360	440	520	600	680	760	920	1,080	1,240	1,400	1,640	1,880	2,120					3,000

Rails exceeding the maximum specified length may be fabricated if joints are used. Please contact NB for assistance.

www.bergab.ru Берг АБ bergab@ya.ru Тел. (495)-228-06-21, факс (495) 223-3071

www.bergab.ru Берг АБ bergab@ya.ru Тел. (495)-228-06-21, факс (495) 223-3071

SGW-TE TYPE

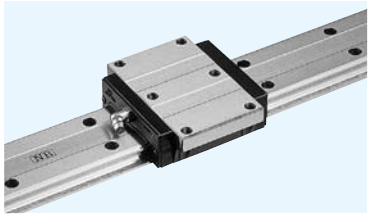

part number structure

example **SGW 21 TE B 2 T1 - 589 P / W2 FS LB F - KGL**

- SGW type
- size
- TE typeblock
- seal (refer to page A-14)
  blank: with side-seals
  B: with side-seals + under-seals
- number of blocks attached to one rail
- preload symbol
  blank: standard
  T1: light
  T2: medium
- total length of rail
- accuracy grade
  blank: standard
  H: high
  P: precision
- symbol for number of axes※
  blank: single axis
  W2: 2 parallel axes
  W3: 3 parallel axes
- with Fiber Sheet
  (Fiber Sheet comes only with standard grease.)
- with low temperature black chrome treatment
- with rail mounting hole caps
- symbol for grease
  blank: standard grease
  KGL: lithium-based grease
  KGU: urea-based grease
  KGF: anti-fretting grease
  GK: K-grease
  refer to page Eng-39~

※The symbol for the number of axes does not mean the number of rails ordered.

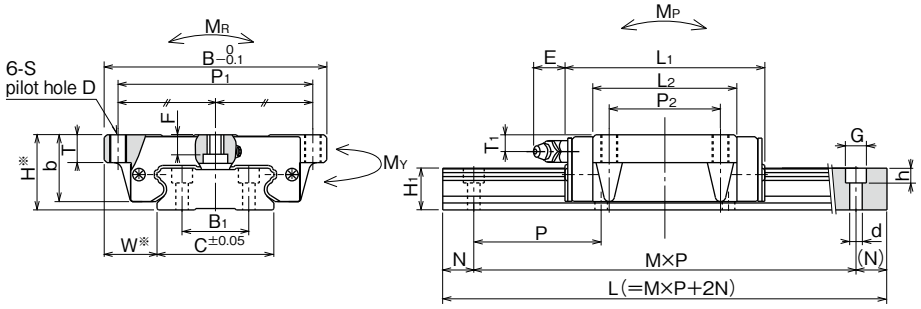

M: number of pitches

※Please refer to page A-79 for accuracy.

part number	assembly dimensions H mm	W mm	block dimensions B mm	L1 mm	L2 mm	P1 mm	P2 mm	S	D mm	F mm	T mm	b mm	E mm	T1 mm	grease fitting
SGW17TE	17	13.5	60	51	33.6	53	26	M4	3.3	3.2	6	14.5	2.5	4	pressed fitting
SGW21TE	21	15.5	68	58	40	60	29	M5	4.4	3.7	8	18	12	4.5	B-M6F
SGW27TE	27	19	80	71.8	51.8	70	40	M6	5.3	6	10	24		6	
SGW35TE	35	25.5	120	106.6	77.6	107	60	M8	6.8	8	14	31		8	

guide rail dimensions H1 mm	C mm	B1 mm	d×G×h mm	N mm	P mm	basic load rating dynamic C kN	static Co kN	allowable static moment MP N・m	MY N・m	MR N・m	mass block kg	guide rail kg/m	block size
9	33	18	4.5×7.5×5.3	15	40	4.8	8.6	43	43	161	0.14	2.05	**17**
11	37	22			50	7	12	72	72	253	0.23	2.84	**21**
15	42	24		20	60	13	22	172	172	496	0.46	4.43	**27**
19	69	40	7×11×9		80	31	49	579	579	1,855	1.35	9.32	**35**

1kN≒102kgf 1N・m≒0.102kgf・m

part number	standard rail length L mm																	maximum length mm
SGW17	110	150	190	230	270	310	350	390	430	510	590	670	750	830	950	1,070	1,190	1,310	2,000
SGW21	130	180	230	280	330	380	430	480	530	630	730	830	930	1,030	1,180	1,330	1,480		2,000
SGW27	160	220	280	340	400	460	520	640	760	880	1,000	1,180	1,360	1,540	1,720	1,900			3,000
SGW35	280	360	440	520	600	680	760	920	1,080	1,240	1,400	1,640	1,880	2,120					3,000

Rails exceeding the maximum specified length may be fabricated if joints are used. Please contact NB for assistance.

www.bergab.ru Берг АБ bergab@ya.ru Тел. (495)-228-06-21, факс (495) 223-3071

www.bergab.ru Берг АБ bergab@ya.ru Тел. (495)-228-06-21, факс (495) 223-3071

SEBS-B/SEBS-BY TYPE
SEBS-BM/SEBS-BYM TYPE

– Retained Ball Type –

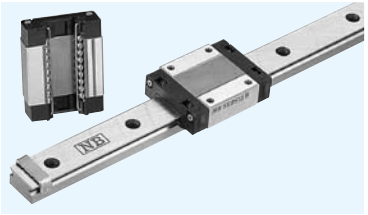

part number structure

example **SEBS 15B Y M UU 2 T1 -589 N P /W2**

- **SEBS**: anti-corrosion
- size
- block — **blank**: standard; **Y**: long
- return cap — **blank**: resin; **M**: stainless steel
- seal — **blank**: without side-seal; **UU**: with side-seals
- number of blocks attached to one rail
- preload symbol — **TO**: clearance; **blank**: standard; **T1**: light
- total length of rail
- rail mounting hole — **blank**: counterbore; **N**: tapped hole
- accuracy grade — **blank**: high; **P**: precision
- symbol for number of axes※ — **blank**: single axis; **W2**: 2 parallel axes; **W3**: 3parallel axes

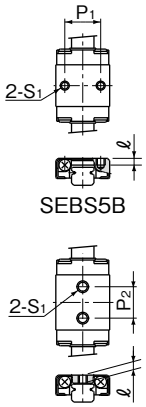

※ The symbol for the number of axes does not mean the number of rails ordered.

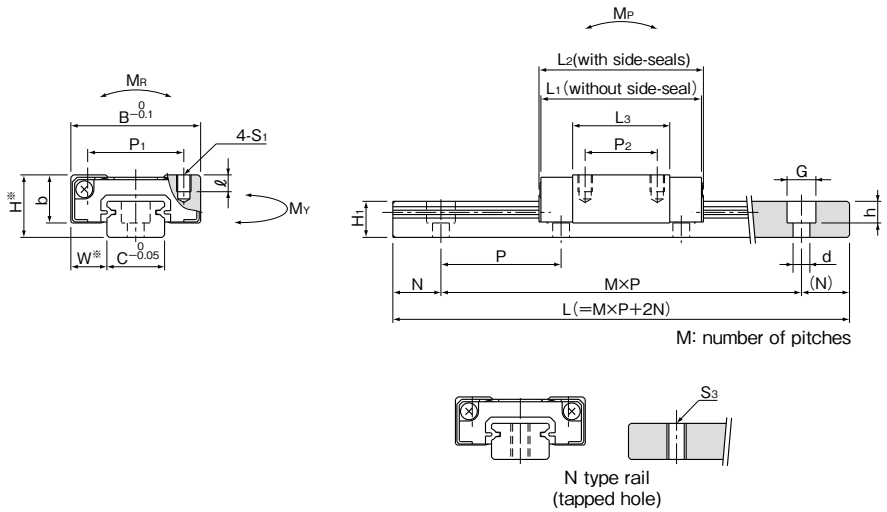

※Please refer to page A-22 for accuracy.

part number resin return cap	part number stainless return cap	assembly dimensions H mm	assembly dimensions W mm	B mm	L1 mm	L2 mm	P1 mm	P2 mm	S1	ℓ mm	L3 mm	b mm
SEBS 5B	SEBS 5BM	6	3.5	12	16.5	16.9	8	—	M2	1.5	9.3	4.5
SEBS 5BY	SEBS 5BYM				19.5	19.9	—	7	M2.6	1.8	12.3	
SEBS 7B	SEBS 7BM	8	5	17	23	23	12	8	M2	2.5	12.8	6.5
SEBS 7BY	SEBS 7BYM				32.5	32.5		13			22.3	
SEBS 9B	SEBS 9BM	10	5.5	20	30.8	30.8	15	10	M3	3	19.6	7.8
SEBS 9BY	SEBS 9BYM				40.3	40.3		16			29.1	
SEBS12B	SEBS12BM	13	7.5	27	33.8	34.2	20	15		3.5	20.2	10
SEBS12BY	SEBS12BYM				45.7	46.1		20			32.1	
SEBS15B	SEBS15BM	16	8.5	32	42.6	43	25	20		4	27.6	12
SEBS15BY	SEBS15BYM				58.6	59		25			43.6	
SEBS20B	SEBS20BM	25	13	46	65.9	65.9	38	38	M4	6	44.7	17.5
SEBS20BY	SEBS20BYM				85.7	85.7					64.5	

guide rail dimensions H1 mm	C mm	d×G×h mm	S3	N mm	P mm	basic load rating dynamic C kN	static Co kN	allowable static moment MP N・m	MY N・m	MR N・m	mass block g resin return cap	stainless return cap	guide rail g/100mm	block size
4	5	2.4×3.5×0.8	M2.6	5	15	0.52	0.76	1.14	0.96	1.97	3	4	13	5B
						0.64	1.01	1.95	1.64	2.62	4	5		5BY
4.7	7	2.4×4.2×2.3	M3			1.29	1.69	3.66	3.07	6.18	9	12	21	7B
						1.90	2.96	10.42	8.74	10.82	15	18		7BY
5.5	9	3.5×6×3.5	M4	7.5	20	1.71	2.54	7.78	6.53	11.81	18	22	31	9B
						2.27	3.80	16.84	14.13	17.71	27	31		9BY
7.5	12	3.5×6×4.5		10	25	3.10	3.83	12.43	10.43	23.91	35	44	59	12B
						4.35	6.22	30.73	25.78	38.85	53	62		12BY
9.5	15		M5	15	40	5.66	6.76	29.29	24.58	52.41	64	77	97	15B
						7.94	10.99	72.43	60.78	85.16	98	110		15BY
15	20	6×9.5×8.5	M6	20	60	11.45	14.58	103.69	87.00	149.50	228	266	205	20B
						14.88	21.21	210.80	176.88	217.45	323	360		20BY

1kN≒102kgf 1N・m≒0.102kgf・m

part number	standard rail length L mm															
SEBS 5B	40	55	70	85	100	115	130	145	160							
SEBS 7B	40	55	70	85	100	115	130	145	160	175	190	205	220	235	250	265
SEBS 9B	55	75	95	115	135	155	175	195	215	235	255	275	295	315	335	355
SEBS12B	70	95	120	145	170	195	220	245	270	295	320	345	370	395	420	445
SEBS15B	70	110	150	190	230	270	310	350	390	430	470	510	550	590	630	670
SEBS20B	220	280	340	400	460	520	580	640	700	760	820	880	940	1,000		

Rails exceeding the maximum specified length may be fabricated if joints are used. Please contact NB for assistance.

							maximum length mm counterbore	tapped hole (N type)
							600	300
280	295	310					1,000	700
375	395	415	435	455	475		1,300	1,000
470	495							

SEBS5 rail mounting screw

SEBS5 counterbore type rails are provided with custom screws for mounting.

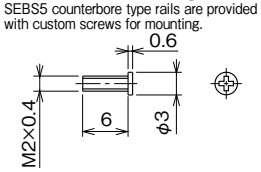

www.bergab.ru Берг АБ bergab@ya.ru Тел. (495)-228-06-21, факс (495) 223-3071

www.bergab.ru Берг АБ bergab@ya.ru Тел. (495)-228-06-21, факс (495) 223-3071

SEBS-WB/SEBS-WBY TYPE

– Retained Ball · Wide Type –

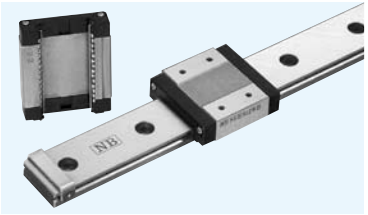

part number structure

example **SEBS 15WB Y UU 2 T1 - 589 N P / W2**

- SEBS: anti-corrosion
- size
- block: blank: standard; Y: long
- seal: blank: without side-seal; UU: with side-seals
- number of blocks attached to one rail
- preload symbol: TO: clearance; blank: standard; T1: light
- total length of rail
- rail mounting hole: blank: counterbore; N: tapped hole
- accuracy grade: blank: high; P: precision
- symbol for number of axes※: blank: single axis; W2: 2 parallel axes; W3: 3 parallel axes

※ The symbol for the number of axes does not mean the number of rails ordered.

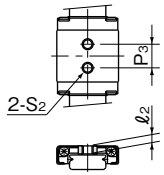

SEBS 5WB／5WBY

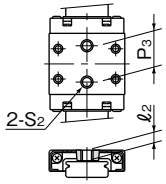

SEBS 7WB／7WBY

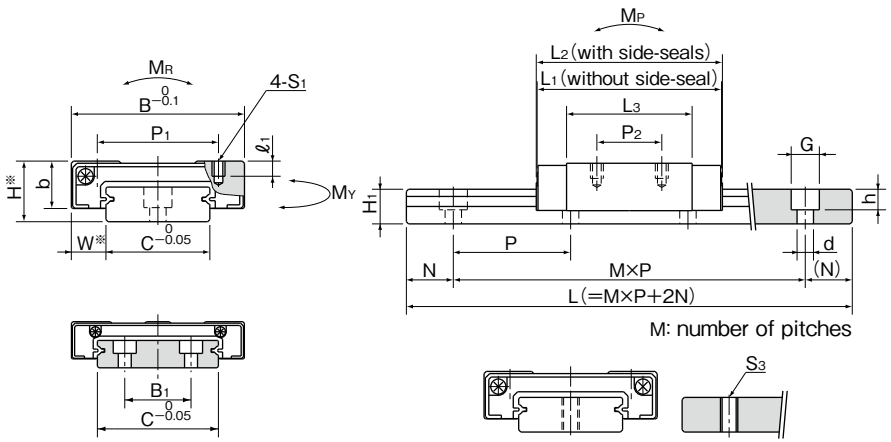

SEBS15WB／15WBY

N type rail (tapped hole)

※Please refer to page A-22 for accuracy.

part number	assembly dimensions H mm	W mm	block dimensions B mm	L1 mm	L2 mm	P1 mm	P2 mm	S1	ℓ1 mm	L3 mm	P3 mm	S2	ℓ2 mm	b mm
SEBS 5WB	6.5	3.5	17	21.3	21.7	—	—	—	—	14.3	6.5	M3	2.3	5
SEBS 5WBY				27.3	27.7					20.3	11			
SEBS 7WB	9	5.5	25	31.4	31.4	19	10	M3	2.8	20.2	12	M4	3.5	7
SEBS 7WBY				40.1	40.1		19			28.9	18			
SEBS 9WB	12	6	30	38.5	38.5	21	12			26.3	—	—	—	9
SEBS 9WBY				50.5	50.5	23	24		3	38.3				
SEBS12WB	14	8	40	42.6	43	28	15		3.6	29	—	—	—	11
SEBS12WBY				58.1	58.5		28			44.5				
SEBS15WB	16	9	60	54.2	54.6	45	20	M4	4.5	38.8	—	—	—	13
SEBS15WBY				73.3	73.7		35			57.9				

guide rail dimensions H1 mm	C mm	B1 mm	d×G×h mm	S3	N mm	P mm	basic load rating dynamic C kN	static Co kN	allowable static moment MP N·m	MY N·m	MR N·m	mass block g	guide rail g/100mm	block size
4	10	—	3×5.5×3	M3	5	20	0.71	1.18	2.61	2.19	6.00	7	26	5WB
							0.91	1.68	5.17	4.33	8.57	10		5WBY
5.2	14	—	3.5×6×3.2	M4	10	30	1.71	2.54	7.78	6.53	18.15	20	51	7WB
							2.27	3.80	16.84	14.13	27.22	28		7WBY
7.5	18	—	3.5×6×4.5				2.97	4.37	18.14	15.22	40.41	37	96	9WB
							3.87	6.38	37.43	31.41	59.05	52		9WBY
8	24	—	4.5×8×4.5	M5	15	40	4.11	5.74	26.42	22.16	70.29	71	137	12WB
							5.46	8.61	57.16	47.96	105.44	106		12WBY
9.5	42	23					7.50	10.14	62.27	52.25	215.53	148	286	15WB
							9.95	15.21	134.73	113.05	323.30	216		15WBY

1kN≒102kgf 1N·m≒0.102kgf·m

part number	standard rail length L mm														
SEBS 5WB	50	70	90	110	130	150	170	190							
SEBS 7WB	50	80	110	140	170	200	230	260	290	320	350	380	410	440	470
SEBS 9WB	50	80	110	140	170	200	230	260	290	320	350	380	410	440	470
SEBS12WB	70	110	150	190	230	270	310	350	390	430	470	510	550	590	630
SEBS15WB	70	110	150	190	230	270	310	350	390	430	470	510	550	590	630

Rails exceeding the maximum specified length may be fabricated if joints are used. Please contact NB for assistance.
The minimum standard rail can not be used for SEBS 9 WBY and SEBS 15 WBY.

							maximum length mm counterbore	tapped hole (N type)
							600	500
							1,000	700
500	530						1,300	1,000
670	710							
670	710	750	790	830	870			

www.bergab.ru Берг АБ bergab@ya.ru Тел. (495)-228-06-21, факс (495) 223-3071

www.bergab.ru Берг АБ bergab@ya.ru Тел. (495)-228-06-21, факс (495) 223-3071

SEB-A/AY TYPE

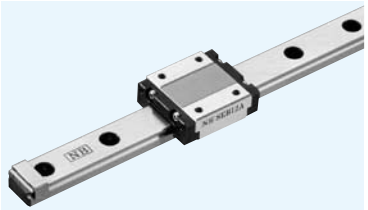

part number structure

example **SEBS 15A Y UU 2 T1 - 589 N P / W2**

- specification
  - SEB: standard
  - SEBS: anti-corrosion
- size
- block
  - blank: standard
  - Y: long
- seal
  - blank: without side-seal
  - UU: with side-seals
- number of blocks attached to one rail
- preload symbol
  - TO: clearance
  - blank: standard
  - T1: light
- total length of rail
- rail mounting hole
  - blank: counterbore
  - N: tapped hole
- accuracy grade
  - blank: high
  - P: precision
- symbol for number of axes※
  - blank: single axis
  - W2: 2 parallel axes
  - W3: 3 parallel axes

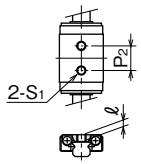

SEBS 2A/3A/3AY/5AY

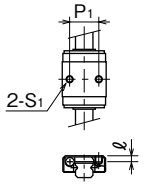

SEBS 5A

※ The symbol for the number of axes does not mean the number of rails ordered.

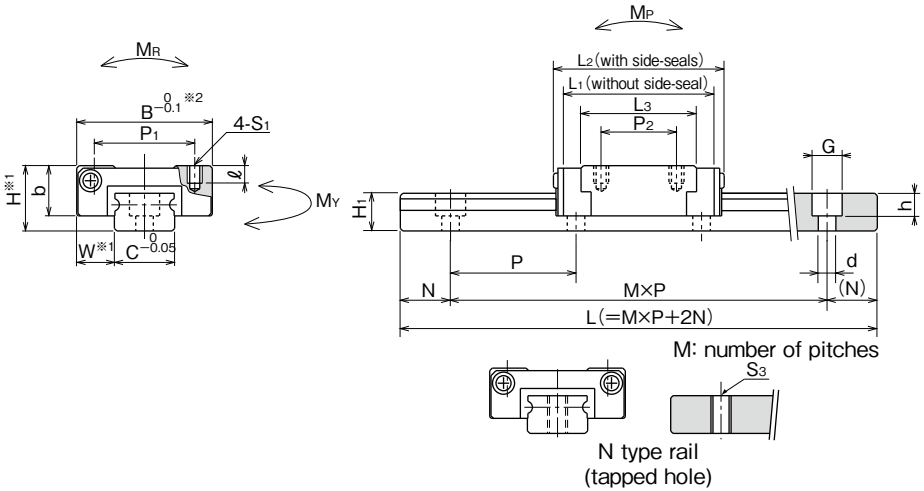

※Please refer to page A-22 for accuracy.
B 0 -0.05 only for SEBS 2A, 3A and 3AY.

part number standard	part number anti-corrosion	assembly dimensions H mm	assembly dimensions W mm	block dimensions B mm	L1 mm	L2 mm	P1 mm	P2 mm	S1	ℓ mm	L3 mm	b mm
—	SEBS 2A	3.2	2	6	12.9	14.3	—	4	M1.4	1.05	9.3	2.5
—	SEBS 3A	4	2.5	8	10.5	11.8	—	3.5	M1.6	1.3	6.5	3
	SEBS 3AY				14.5	15.8	—	5.5	M2		10.5	
—	SEBS 5A	6	3.5	12	15.6	17	8	—	M2	1.5	9.8	4.5
	SEBS 5AY				19.2	20.6	—	7	M2.6	1.8	13.4	
—	SEBS 7A	8	5	17	21.9	24	12	8	M2	2.5	15.1	6.5
	SEBS 7AY				31	33		13			24.6	
SEB 9A	SEBS 9A	10	5.5	20	28.1	29.5	15	10	M3	3	20.4	7.8
SEB 9AY	SEBS 9AY				38.1	40		16			30.4	
SEB12A	SEBS12A	13	7.5	27	30	33.5	20	15		3.5	22.8	10
SEB12AY	SEBS12AY				42	45.5		20			34.7	
SEB15A	SEBS15A	16	8.5	32	38.5	42	25	20		4	29.5	12
SEB15AY	SEBS15AY				54.5	58		25			45.4	
SEB20A	SEBS20A	25	13	46	55.7	61	38	38	M4	6	45.7	17.5
SEB20AY	SEBS20AY				79.5	85					69.5	

part number standard	part number anti-corrosion	H1 mm	C mm	S3	d×G×h mm	N mm	P mm	basic load rating dynamic C kN	basic load rating static Co kN	allowable static moment MP N・m	MY N・m	MR N・m	mass block g	mass guide rail g/100mm	block size
—	SEBS 2A	2	2	M1	—	4	8	0.21	0.38	0.53	0.64	0.41	0.8	2.8	2A
—	SEBS 3A	2.6	3	M1.6	—	5	10	0.25	0.36	0.39	0.46	0.57	1	5	3A
	SEBS 3AY							0.35	0.58	0.97	1.16	0.93	2		3AY
—	SEBS 5A	4	5	M2.6	2.4×3.5×1	5	15	0.59	0.81	1.32	1.58	2.11	4	13	5A
	SEBS 5AY							0.74	1.11	2.39	2.86	2.90	5		5AY
—	SEBS 7A	4.7	7	M3	2.4×4.2×2.3			1.08	1.41	3.07	3.66	5.18	11	21	7A
	SEBS 7AY							1.59	2.48	8.74	10.4	9.07	16		7AY
SEB 9A	SEBS 9A	5.5	9	M4	3.5×6×3.5	7.5	20	1.92	2.53	7.64	9.11	11.5	19	30	9A
SEB 9AY	SEBS 9AY							2.62	3.94	17.5	20.8	17.9	28		9AY
SEB12A	SEBS12A	7.5	12		3.5×6×4.5	10	25	2.60	3.20	10.4	12.4	20.0	37	60	12A
SEB12AY	SEBS12AY							3.65	5.21	25.7	30.7	32.6	55		12AY
SEB15A	SEBS15A	9.5	15	M5		15	40	4.74	5.67	24.5	29.2	43.9	68	100	15A
SEB15AY	SEBS15AY							6.65	9.22	60.7	72.4	71.4	101		15AY
SEB20A	SEBS20A	15	20	M6	6×9.5×8.5	20	60	8.99	11.1	72.7	86.7	114	226	209	20A
SEB20AY	SEBS20AY							12.4	17.8	176	210	182	338		20AY

1kN≒102kgf 1N・m≒0.102kgf・m

part number standard	part number anti-corrosion	standard rail length L mm														
—	SEBS 2A	32	40	56	80	104										
—	SEBS 3A	30	40	60	80	100										
—	SEBS 5A	40	55	70	85	100	115	130	145	160						
—	SEBS 7A	40	55	70	85	100	115	130	145	160	175	190	205	220	235	250
SEB 9A	SEBS 9A	55	75	95	115	135	155	175	195	215	235	255	275	295	315	335
SEB12A	SEBS12A	70	95	120	145	170	195	220	245	270	295	320	345	370	395	420
SEB15A	SEBS15A	70	110	150	190	230	270	310	350	390	430	470	510	550	590	630
SEB20A	SEBS20A	220	280	340	400	460	520	580	640	700	760	820	880	940	1,000	

Joint rails are used when the required length exceeds the maximum standard length listed in the dimension tables.
Please contact NB for details. Only N type rail is available for SEBS2A and SEBS 5A.

265	280	295	310																					
355	375	395	415	435	455	475																		
445	470	495																						
670																								

maximum length mm counterbore standard	counterbore anti-corrosion	tapped hole (N type) standard	tapped hole (N type) anti-corrosion
–	–	–	150
–	–	–	150
–	600	–	300
–	1,000	–	700
500	1,300	500	1,000
1,900		1,900	

SEBS5 rail mounting screw

SEBS5 counterbore type rails are provided with custom screws for mounting.

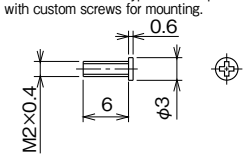

www.bergab.ru Берг АБ bergab@ya.ru Тел. (495)-228-06-21, факс (495) 223-3071

www.bergab.ru Берг АБ bergab@ya.ru Тел. (495)-228-06-21, факс (495) 223-3071

SEB-WA/SEB-WAY TYPE

— Wide Type —

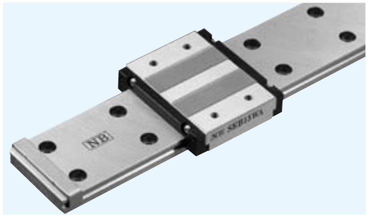

part number structure

example SEBS 15WA Y UU 2 T1 -589 N P /W2

- specification
  SEB: standard
  SEBS: anti-corrosion
- size
- block
  blank: standard
  Y: long
- seal
  blank: without side-seal
  UU: with side-seals
- number of blocks attached to one rail
- preload symbol
  T0: clearance
  blank: standard
  T1: light
- total length of rail
- rail mounting hole
  blank: counterbore
  N: tapped hole
- accuracy grade
  blank: high
  P: precision
- symbol for number of axes※
  blank: single axis
  W2: 2 parallel axes
  W3: 3 parallel axes

※ The symbol for the number of axes does not mean the number of rails ordered.

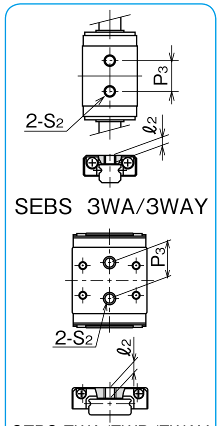

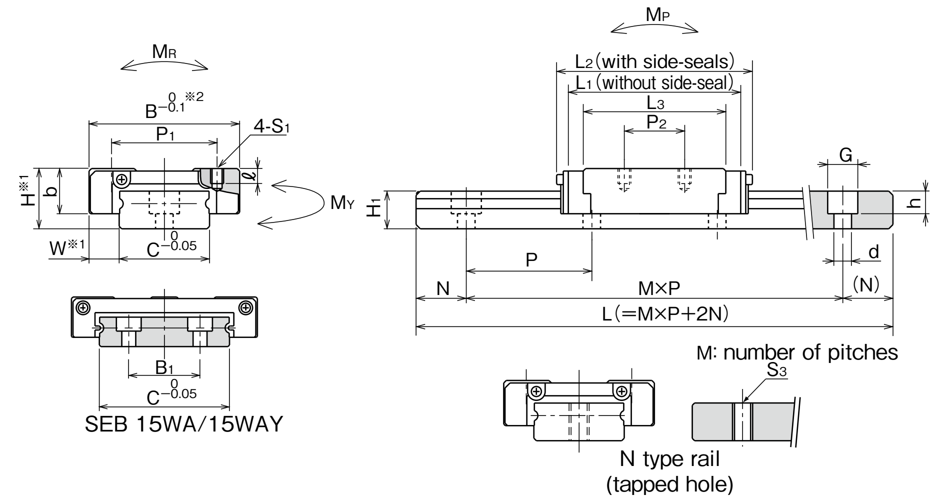

※Please refer to page A-22 for accuracy.
B $^{0}_{-0.05}$ only for SEBS 3WA and 3WAY

part number standard	part number anti-corrosion	assembly dimensions H mm	W mm	block dimensions B mm	L_1 mm	L_2 mm	P_1 mm	P_2 mm	S_1	ℓ mm	L_3 mm	P_3 mm	S_2	$ℓ_2$ mm	b mm
—	SEBS 3WA	4.5	3	12	14.2	15	—	—	—	—	9.7	4.5	M2	1.7	3.5
	SEBS 3WAY				19	19.8					14.5	8			
—	SEBS 7WA	9	5.5	25	30.1	32	18	12	M2.6	2.5	22.1	12	M4	3.5	7
	SEBS 7WD						19	10	M3	2.8					
	SEBS 7WAY				39.6	41		19			31.6	18			
SEB 9WA	SEBS 9WA	12	6	30	35.9	38	21	12	M2.6	3	28.4	—	—	—	9
SEB 9WD	SEBS 9WD								M3	2.8					
SEB 9WAY	SEBS 9WAY				48	50	23	24		3	40.4				
SEB12WA	SEBS12WA	14	8	40	40.7	44	28	15		3.5	33.5	—	—	—	11
SEB12WAY	SEBS12WAY				55	58.5		28			47.8				
SEB15WA	SEBS15WA	16	9	60	51.2	55	45	20	M4	4.5	42	—	—	—	13
SEB15WAY	SEBS15WAY				70.5	74		35			61.1				

guide rail dimensions H_1 mm	C mm	B_1 mm	S_3	d×G×h mm	N mm	P mm	basic load rating dynamic C kN	static C_0 kN	allowable static moment M_P N・m	M_Y N・m	M_R N・m	mass block g	mass guide rail g/100mm	block size
2.6	6	—	M3	2.4×4×1.5	5	15	0.33	0.54	0.83	0.99	1.67	3	10	3WA
							0.44	0.81	1.81	2.15	2.51	4		3WAY
5.2	14	—	M4	3.5×6×3.2	10	30	1.43	2.12	6.53	7.78	15.2	21	51	7WA
														7WD
							1.90	3.19	14.1	16.8	22.8	30		7WAY
7.5	18	—		3.5×6×4.5			2.49	3.66	15.2	18.1	33.9	38	96	9WA
														9WD
							3.25	5.35	31.4	37.4	49.5	55		9WAY
8	24	—	M5	4.5×8×4.5	15	40	3.64	5.21	25.7	30.7	63.8	77	138	12WA
							4.75	7.62	53.2	63.4	93.3	109		12WAY
9.5	42	23					6.29	8.51	52.2	62.2	180	154	294	15WA
							8.35	12.7	113	134	271	222		15WAY

1kN≒102kgf 1N・m≒0.102kgf・m

part number standard	part number anti-corrosion	standard rail length L mm	maximum length mm counterbore standard	counterbore anti-corrosion	tapped hole (N type) standard	tapped hole (N type) anti-corrosion
—	SEBS 3WA	40 55 70 85 100	—	500	—	150
—	SEBS 7WA	50 80 110 140 170 200 230 260 290 320 350 380 410 440 470	—	1,000	—	700
SEB 9WA	SEBS 9WA	50 80 110 140 170 200 230 260 290 320 350 380 410 440 470 500 530	1,900	1,300	1,900	1,000
SEB12WA	SEBS12WA	70 110 150 190 230 270 310 350 390 430 470 510 550 590 630 670 710				
SEB15WA	SEBS15WA	70 110 150 190 230 270 310 350 390 430 470 510 550 590 630 670 710 750 790 830 870				

SEBS3WA/3WAY rail mounting screw

SEBS3WA/3WAY counterbore type rails are provided with custom screws for mounting.

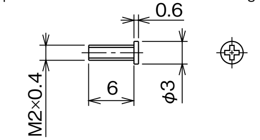

Joint rails are used when the required length exceeds the maximum standard length listed in the dimension tables.
Please contact NB for details. SEB9WAY and SEB15WAY block lengths exceed the minimum standard rail length.

www.bergab.ru Берг АБ bergab@ya.ru Тел. (495)-228-06-21, факс (495) 223-3071

www.bergab.ru Берг АБ bergab@ya.ru Тел. (495)-228-06-21, факс (495) 223-3071

SER-A TYPE

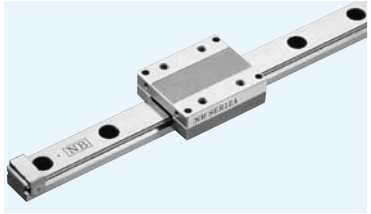

part number structure

example **SERS 15A UU 2-589 N P/W2**

- specification
  SER: standard
  SERS: anti-corrosion
- size
- seal
  blank: without side-seal
  UU: with side-seals
- number of blocks attached to one rail
- total length of rail
- rail mounting hole
  blank: counterbore
  N: tapped hole
- accuracy grade
  blank: high
  P: precision
- symbol for number of axes※
  blank: single axis
  W2: 2 parallel axes
  W3: 3 parallel axes

※ The symbol for the number of axes does not mean the number of rails ordered.

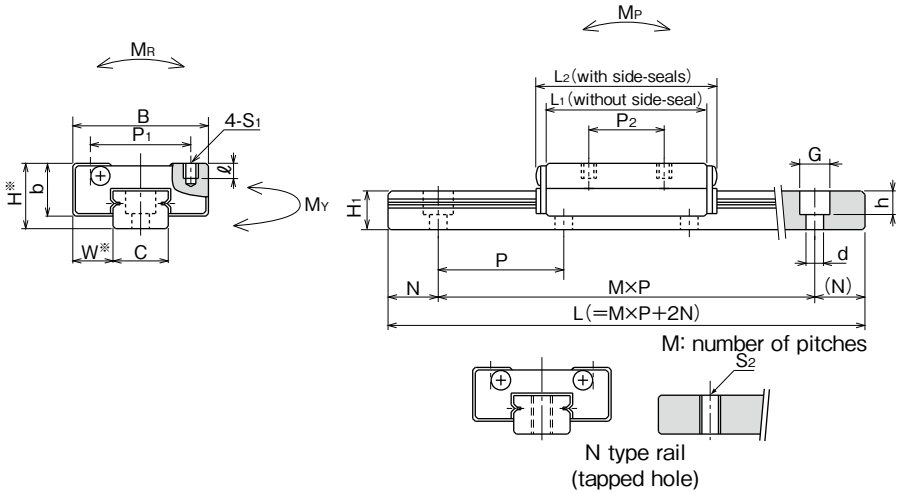

※Please refer to page A-35 for accuracy.

part number standard	part number anti-corrosion	assembly dimensions H mm	assembly dimensions W mm	block dimensions B mm	block dimensions L1 mm	block dimensions L2 mm	block dimensions P1 mm	block dimensions P2 mm	block dimensions S1	block dimensions ℓ mm	block dimensions b mm
SER 9A	SERS 9A	10	5.7	20	28	32	15	13	M2	2.5	7.8
SER12A	SERS12A	13	8	27	32	36	20	15	M3	3	10.5
SER15A	SERS15A	16	8.5	32	40	44	25	20		4	11.5
SER20A	SERS20A	25	13	46	60	66	38	38	M4	6	17.5

guide rail dimensions H1 mm	C mm	S2	d×G×h mm	N mm	P mm	basic load rating dynamic C kN	static Co kN	allowable static moment MP N・m	MY N・m	MR N・m	mass block g	guide rail g/100mm	block size
5.5	8.6	M4	2.6×4.5×3	7.5	20	2.65	2.94	11.8	13.7	19.6	25	35	9A
7.5	11		3.5×6×4.5	10	25	3.43	3.92	15.7	17.6	29.4	51	55	12A
9.5	15	M5		15	40	4.70	5.78	29.0	32.3	54.9	82	100	15A
15	20	M6	6×9.5×8.5	20	60	8.82	9.80	59.0	66.6	151	280	230	20A

1kN≒102kgf 1N・m≒0.102kgf・m

part number standard	part number anti-corrosion	standard rail length L mm							maximum length mm
SER 9A	SERS 9A	55	75	95	115	155	195	275	275
SER12A	SERS12A	120	170	220	270	320	370	470	470
SER15A	SERS15A	150	230	310	430	550	670		670
SER20A	SERS20A	220	280	340	460	640	880		880

www.bergab.ru Берг АБ bergab@ya.ru Тел. (495)-228-06-21, факс (495) 223-3071

www.bergab.ru Берг АБ bergab@ya.ru Тел. (495)-228-06-21, факс (495) 223-3071

SER-WA TYPE

– Wide Type –

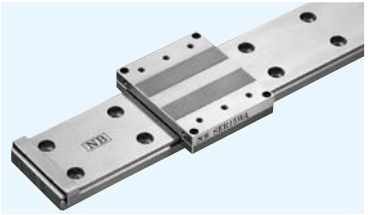

part number structure

example **SERS 15WA UU 2 - 589 N P / W2**

- specification — **SER**: standard; **SERS**: anti-corrosion
- size
- seal — **blank**: without side-seal; **UU**: with side-seals
- number of blocks attached to one rail
- total length of rail
- rail mounting hole — **blank**: counterbore; **N**: tapped hole
- accuracy grade — **blank**: high; **P**: precision
- symbol for number of axes※ — **blank**: single axis; **W2**: 2 parallel axes; **W3**: 3 parallel axes

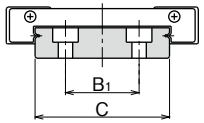

SER 15WA

※ The symbol for the number of axes does not mean the number of rails ordered.

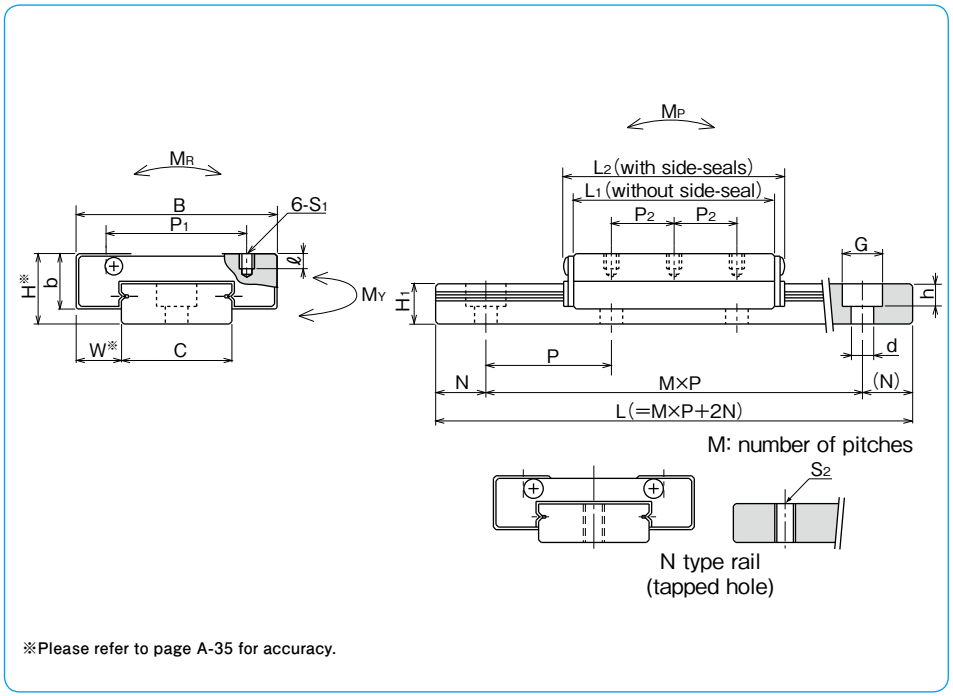

※Please refer to page A-35 for accuracy.

part number standard	part number anti-corrosion	assembly dimensions H mm	assembly dimensions W mm	B mm	L_1 mm	L_2 mm	P_1 mm	P_2 mm	S_1	ℓ mm	b mm
SER 9WA	**SERS 9WA**	12	6.5	30	35	39	21	10	M3	3	8.8
SER12WA	**SERS12WA**	14	9	40	40	44	28	12.5			11
SER15WA	**SERS15WA**	16		60	50	54	45	15	M4	4.5	11.5

guide rail dimensions H_1 mm	C mm	B_1 mm	S_2	d×G×h mm	N mm	P mm	basic load rating dynamic C kN	static Co kN	allowable static moment M_P N·m	M_Y N·m	M_R N·m	mass block g	guide rail g/100mm	block size
7.5	17	–	M4	3.5×6×4.5	10	30	3.43	3.72	24.5	27.4	51.9	46	90	**9WA**
8	22	–	M5	4.5×8×4.5	15	40	4.41	5.00	35.3	39.2	85.3	92	122	**12WA**
9.5	42	23					7.35	8.92	55.9	61.7	215.0	165	280	**15WA**

1kN≒102kgf 1N·m≒0.102kgf·m

part number standard	part number anti-corrosion	standard rail length L mm							maximum length mm
SER 9WA	**SERS 9WA**	80	110	140	170	200	260	290	290
SER12WA	**SERS12WA**	110	150	190	230	310	390	470	470
SER15WA	**SERS15WA**	150	230	310	430	550	670		670

www.bergab.ru Берг АБ bergab@ya.ru Тел. (495)-228-06-21, факс (495) 223-3071

www.bergab.ru Берг АБ bergab@ya.ru Тел. (495)-228-06-21, факс (495) 223-3071

SGL-F TYPE

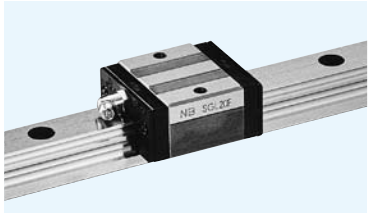

part number structure

example **SGL 15 F B 2 T1 - 589 D P / W2 FS LB F J - KGL**

- specification — **SGL**: standard; **SGLS**: anti-corrosion
- size
- block style
- seal (refer to page A-14) — **blank**: with side-seals; **B**: with side-seals + under-seals; **BW**: with double-seals + under-seals; **BS**: B + scraper
- number of blocks attached to one rail
- preload symbol — **blank**: standard; **T1**: light; **T2**: medium
- total length of rail
- size of rail installation hole (D type rail is available only for SGL 15)
- accuracy grade — **blank**: standard; **H**: high; **P**: precision
- symbol for number of axes※ — **blank**: single axis; **W2**: 2 parallel axes; **W3**: 3 parallel axes
- with Fiber Sheet (Fiber Sheet comes only with standard grease.)
- with low temperature black chrome treatment
- with rail mounting hole caps
- with bellows (refer to page A-16)
- symbol for grease — **blank**: standard grease; **KGL**: lithium-based grease; **KGU**: urea-based grease; **KGF**: anti-fretting grease; **GK**: K-grease (refer to page Eng-39~)

※The symbol for the number of axes does not mean the number of rails ordered.

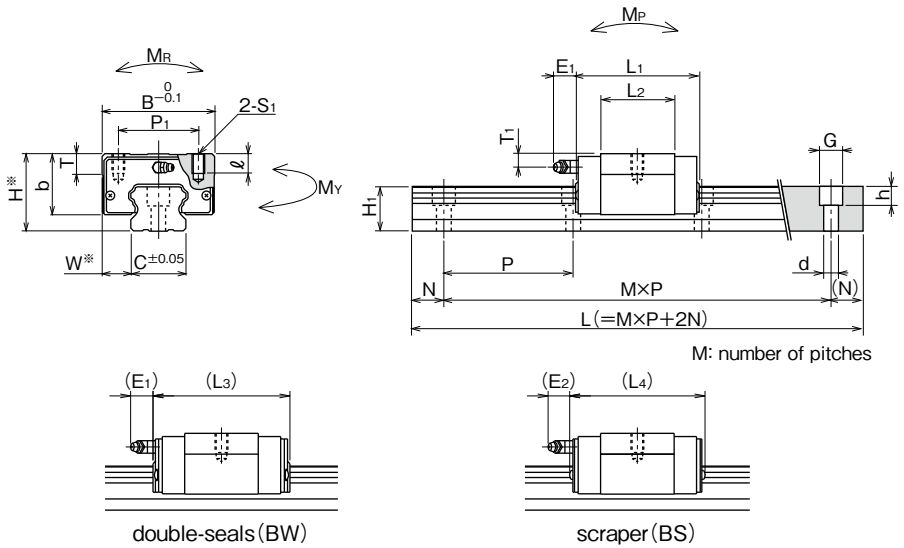

※Please refer to page A-44 for accuracy.

part number standard	part number anti-corrosion	assembly dimensions H mm	assembly dimensions W mm	block dimensions B mm	L1 mm	L2 mm	L3 mm	L4 mm	P1 mm	S1	ℓ mm	T mm	b mm	E1 mm
SGL15F SGL15F-D	SGLS15F SGLS15F-D	24	9.5	34	40.7	22.7	46.9	47.3	26	M4	7	6	19.5	6
SGL20F	SGLS20F	28	11	42	47.9	29.5	54.1	54.5	32	M5	8	7.5	22	12
SGL25F	SGLS25F	33	12.5	48	58.7	37.7	65.1	65.9	35	M6	9	8	26	
SGL30F	—	42	16	60	68	40	76.6	75.6	40	M8	12	9	32.5	
SGL35F	—	48	18	70	77	46	85.6	84.6	50			13	38	

E2 mm	T1 mm	grease fitting	guide rail dimensions H1 mm	C mm	d×G×h mm	N mm	P mm	basic load rating dynamic C kN	static Co kN	allowable static moment MP / MP2 N・m	MY / MY2 N・m	MR N・m	mass block kg	guide rail kg/m	block size
5.4	5	pressed fitting	13.5	15	3.5×6×4.5 4.5×7.5×5.3	20	60	7.29	9.46	37 252	37 252	74	0.1	1.3	15
11	6	B-M6F	16	20	6×9.5×8.5			11.91	14.81	72 447	72 447	159	0.2	2.1	20
	6.5		20	23	7×11×9			17.0	21.2	123 751	123 751	255	0.3	3.0	25
	9		24	28			80	23.0	28.7	195 1,263	195 1,263	418	0.5	4.6	30
	8.5		27.5	34	9×14×12			32.0	37.8	294 1,873	294 1,873	693	0.8	6.2	35

1kN≒102kgf 1N・m≒0.102kgf・m

part number standard	part number anti-corrosion	standard rail length L mm																		maximum length mm standard	maximum length mm anti-corrosion
SGL15	SGLS15	160	220	280	340	400	460	520	580	640	700	760	820	880	940	1,000	1,120	1,240	1,360	2,000	1,480
SGL20	SGLS20	220	280	340	400	460	520	580	640	700	760	820	880	940	1,000	1,120	1,240	1,360	1,480	3,000	1,480
SGL25	SGLS25	220	280	340	400	460	520	580	640	700	760	820	880	940	1,000	1,120	1,240	1,360	1,480	3,000	1,480
SGL30	—	280	360	440	520	600	680	760	840	920	1,000	1,080	1,160	1,240	1,320	1,400	1,480	1,640	1,720	3,000	—
SGL35	—	280	360	440	520	600	680	760	840	920	1,000	1,080	1,160	1,240	1,320	1,400	1,480	1,640	1,720	3,000	—

Rails exceeding the maximum specified length may be fabricated if joints are used. Please contact NB for assistance.

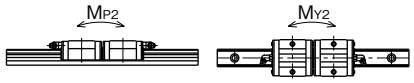

When two blocks are used in close contact.

www.bergab.ru Берг АБ bergab@ya.ru Тел. (495)-228-06-21, факс (495) 223-3071

www.bergab.ru Берг АБ bergab@ya.ru Тел. (495)-228-06-21, факс (495) 223-3071

SGL-TF TYPE

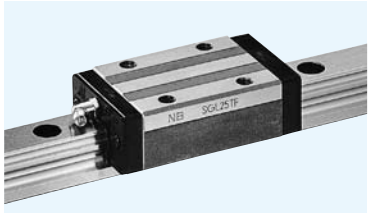

part number structure

example **SGL 15 TF B 2 T1 - 589 D P / W2 FS LB F J - KGL**

- specification — SGL: standard; SGLS: anti-corrosion
- size
- block style
- seal (refer to page A-14) — blank: with side-seals; B: with side-seals + under-seals; BW: with double-seals + under-seals; BS: B + scraper
- number of blocks attached to one rail
- preload symbol — blank: standard; T1: light; T2: medium
- total length of rail
- size of rail installation hole (D type rail is available only for SGL 15)
- symbol for grease — blank: standard grease; KGL: lithium-based grease; KGU: urea-based grease; KGF: anti-fretting grease; GK: K-grease; refer to page Eng-39~
- with bellows (refer to page A-16)
- with rail mounting hole caps
- with low temperature black chrome treatment
- with Fiber Sheet (Fiber Sheet comes only with standard grease.)
- symbol for number of axes※ — blank: single axis; W2: 2 parallel axes; W3: 3 parallel axes
- accuracy grade — blank: standard; H: high; P: precision

※The symbol for the number of axes does not mean the number of rails ordered.

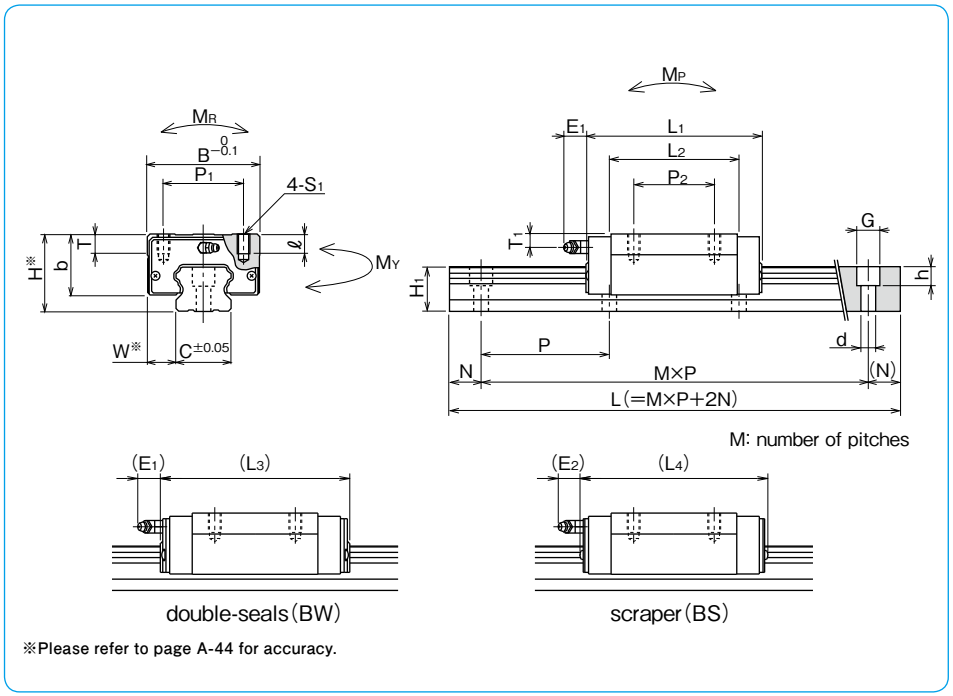

※Please refer to page A-44 for accuracy.

part number standard	part number anti-corrosion	assembly dimensions H mm	assembly dimensions W mm	block dimensions B mm	L1 mm	L2 mm	L3 mm	L4 mm	P1 mm	P2 mm	S1	ℓ mm	T mm	b mm	E1 mm
SGL15TF SGL15TF-D	SGLS15TF SGLS15TF-D	24	9.5	34	56.5	38.5	62.7	63.1	26	26	M4	7	6	19.5	6
SGL20TF	SGLS20TF	28	11	42	65.8	47.4	72.0	72.4	32	32	M5	8	7.5	22	12
SGL25TF	SGLS25TF	33	12.5	48	80	59	86.4	87.2	35	35	M6	9	8	26	
SGL30TF	—	42	16	60	95.7	67.7	104.3	103.3	40	40	M8	12	9	32.5	
SGL35TF	—	48	18	70	109	78	117.6	116.6	50	50			13	38	

E2 mm	T1 mm	grease fitting	H1 mm	C mm	d×G×h mm	N mm	P mm	basic load rating dynamic C kN	basic load rating static Co kN	allowable static moment MP N・m	MY N・m	MR N・m	mass block kg	mass guide rail kg/m	block size
5.4	5	pressed fitting	13.5	15	3.5×6×4.5 4.5×7.5×5.3	20	60	10.6	16.2	100	100	127	0.2	1.3	15
11	6	B-M6F	16	20	6×9.5×8.5			16.4	23.3	165	165	250	0.3	2.1	20
	6.5		20	23	7×11×9			24.8	36.3	335	335	437	0.4	3.0	25
	9		24	28			80	33.6	49.2	529	529	716	0.8	4.6	30
	8.5		27.5	34	9×14×12			46.7	64.8	796	796	1,188	1.3	6.2	35

1kN≒102kgf 1N・m≒0.102kgf・m

part number standard	part number anti-corrosion	standard rail length L mm																maximum length mm standard	maximum length mm anti-corrosion
SGL15	SGLS15	160	220	280	340	400	460	520	580	640	700	760	820	880	940	1,000	1,120	2,000	1,480
SGL20	SGLS20	220	280	340	400	460	520	580	640	700	760	820	880	940	1,000	1,120	1,240	3,000	1,480
SGL25	SGLS25	220	280	340	400	460	520	580	640	700	760	820	880	940	1,000	1,120	1,240	3,000	1,480
SGL30	—	280	360	440	520	600	680	760	840	920	1,000	1,080	1,160	1,240	1,320	1,400	1,480	3,000	—
SGL35	—	280	360	440	520	600	680	760	840	920	1,000	1,080	1,160	1,240	1,320	1,400	1,480	3,000	—

Rails exceeding the maximum specified length may be fabricated if joints are used. Please contact NB for assistance.

www.bergab.ru Берг АБ bergab@ya.ru Тел. (495)-228-06-21, факс (495) 223-3071

www.bergab.ru Берг АБ bergab@ya.ru Тел. (495)-228-06-21, факс (495) 223-3071

SGL-HTF TYPE

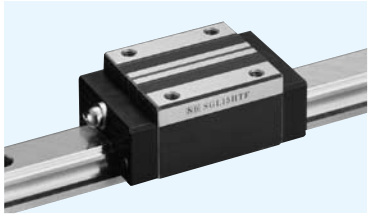

part number structure

example **SGL 15 HTF B 2 T1 - 589 P / W2 FS LB F J - KGL**

- SGL type
- size
- block style
- seal (refer to page A-14)
  blank: with side-seals
  B: with side-seals + under-seals
  BW: with double-seals + under-seals
  BS: B + scraper
- number of blocks attached to one rail
- preload symbol
  blank: standard
  T1: light
  T2: medium
- total length of rail
- accuracy grade
  blank: standard
  H: high
  P: precision
- symbol for number of axes※
  blank: single axis
  W2: 2 parallel axes
  W3: 3 parallel axes
- with low temperature black chrome treatment
- with rail mounting hole caps
- with Fiber Sheet
  (Fiber Sheet comes only with standard grease.)
- with bellows (refer to page A-16)
- symbol for grease
  blank: standard grease
  KGL: lithium-based grease
  KGU: urea-based grease
  KGF: anti-fretting grease
  GK: K-grease
  refer to page Eng-39~

※The symbol for the number of axes does not mean the number of rails ordered.

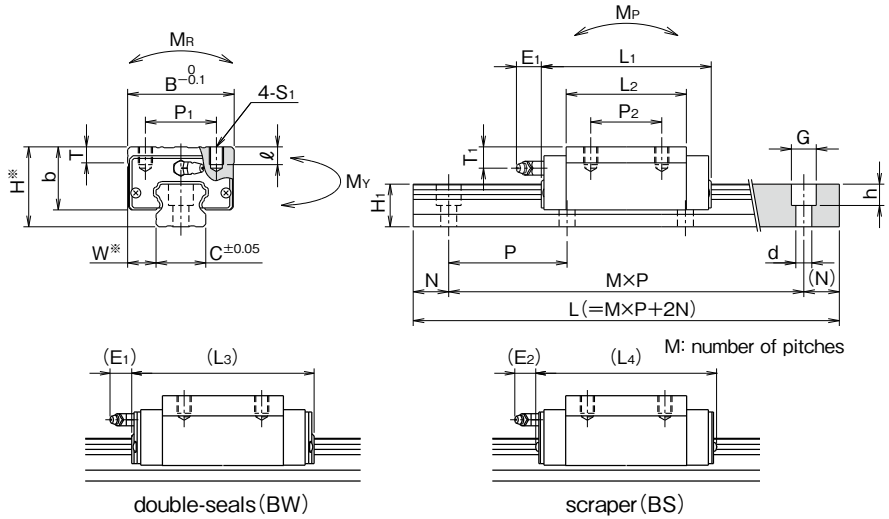

※Please refer to page A-44 for accuracy.

part number	assembly dimensions H mm	W mm	block dimensions B mm	L1 mm	L2 mm	L3 mm	L4 mm	P1 mm	P2 mm	S1	ℓ mm	T mm	b mm	E1 mm	E2 mm
SGL15HTF	28	9.5	34	56.5	38.5	62.7	63.1	26	26	M4	5	6	23.7	6	5.4
SGL20HTF	30	12	44	71.6	53.2	77.8	78.2	32	36	M5	6	9.5	24	12	11
SGL25HTF	40	12.5	48	80	59	86.4	87.2	35	35	M6	8	9	33		
SGL30HTF	45	16	60	95.7	67.7	104.3	103.3	40	40	M8	10		35.5		
SGL35HTF	55	18	70	109	78	117.6	116.6	50	50		12	13	45		
SGL45HTF	70	20.5	86	139	102	147.5	148	60	60	M10	17	15	60	15	15

T1 mm	grease fitting	guide rail dimensions H1 mm	C mm	d×G×h mm	N mm	P mm	basic load rating dynamic C kN	static Co kN	allowable static moment MP N・m	MY N・m	MR N・m	mass block kg	guide rail kg/m	block size
9	pressed fitting	13.5	15	4.5×7.5×5.3	20	60	10.6	16.2	100	100	127	0.2	1.3	**15**
8	B-M6F	16	20	6×9.5×8.5			18.4	27.5	227	227	296	0.4	2.1	**20**
13.5		20	23	7×11×9			24.8	36.3	335	335	437	0.6	3.0	**25**
12		24	28	9×14×12		80	33.6	49.2	529	529	716	0.9	4.6	**30**
15.5		27.5	34				46.7	64.8	796	796	1,188	1.5	6.2	**35**
20	B-PT1/8	36.5	45	14×20×17	22.5	105	74.8	101.2	1,553	1,553	2,312	3.1	10.5	**45**

1kN≒102kgf 1N・m≒0.102kgf・m

part number	standard rail length L mm																maximum length mm
SGL15	160	220	280	340	400	460	520	580	640	700	760	820	880	940	1,000	1,120	2,000
SGL20	220	280	340	400	460	520	580	640	700	760	820	880	940	1,000	1,120	1,240	3,000
SGL25	220	280	340	400	460	520	580	640	700	760	820	880	940	1,000	1,120	1,240	3,000
SGL30	280	360	440	520	600	680	760	840	920	1,000	1,080	1,160	1,240	1,320	1,400	1,480	3,000
SGL35	280	360	440	520	600	680	760	840	920	1,000	1,080	1,160	1,240	1,320	1,400	1,480	3,000
SGL45	570	675	780	885	990	1,095	1,200	1,305	1,410	1,515	1,620	1,725	1,830	1,935	2,040	2,145	3,000

Rails exceeding the maximum specified length may be fabricated if joints are used. Please contact NB for assistance.

www.bergab.ru Берг АБ bergab@ya.ru Тел. (495)-228-06-21, факс (495) 223-3071

www.bergab.ru Берг АБ bergab@ya.ru Тел. (495)-228-06-21, факс (495) 223-3071

SGL-HYF TYPE

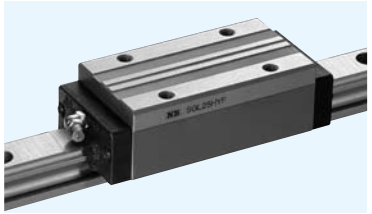

part number structure

example **SGL 15 HYF B 2 T1 - 589 P / W2 FS LB F J - KGL**

- SGL type
- size
- block style
- seal (refer to page A-14)
  blank: with side-seals
  B: with side-seals + under-seals
  BW: with double-seals + under-seals
  BS: B + scraper
- number of blocks attached to one rail
- preload symbol
  blank: standard
  T1: light
  T2: medium
- total length of rail
- accuracy grade
  blank: standard
  H: high
  P: precision
- symbol for number of axes※
  blank: single axis
  W2: 2 parallel axes
  W3: 3 parallel axes
- with Fiber Sheet
  (Fiber Sheet comes only with standard grease.)
- with low temperature black chrome treatment
- with rail mounting hole caps
- with bellows (refer to page A-16)
- symbol for grease
  blank: standard grease
  KGL: lithium-based grease
  KGU: urea-based grease
  KGF: anti-fretting grease
  GK: K-grease
  refer to page Eng-39~

※The symbol for the number of axes does not mean the number of rails ordered.

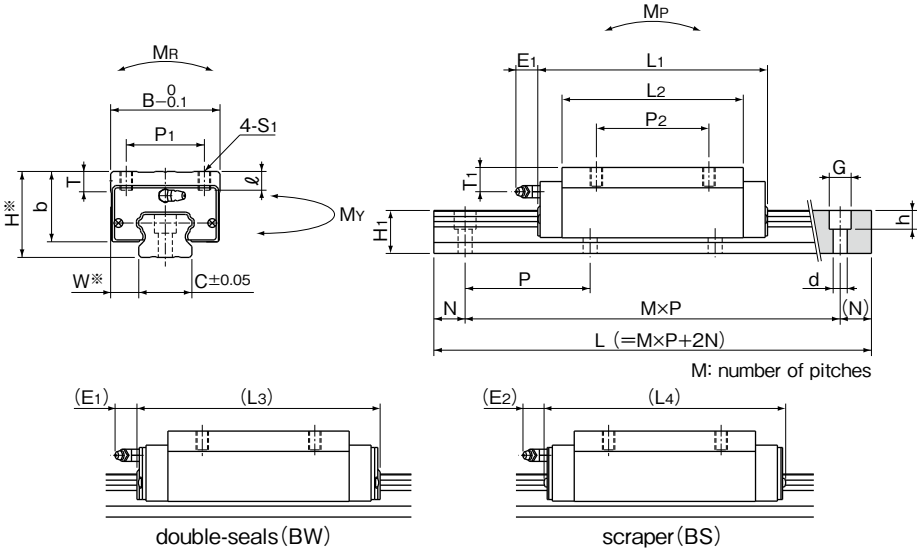

※Please refer to page A-44 for accuracy.

part number	assembly dimensions H mm	W mm	block dimensions B mm	L1 mm	L2 mm	L3 mm	L4 mm	P1 mm	P2 mm	S1	ℓ mm	T mm	b mm	E1 mm	E2 mm
SGL15HYF	28	9.5	34	79	61	82.5	85.6	26	26	M4	5	6	23.7	6	5.4
SGL20HYF	30	12	44	96	77.6	102.2	102.6	32	50	M5	6	9.5	24	12	11
SGL25HYF	40	12.5	48	109	88	115.4	116.2	35	50	M6	8	9	33		
SGL30HYF	45	16	60	129	101	137.6	136.6	40	60	M8	10		35.5		
SGL35HYF	55	18	70	147	116	155.6	154.6	50	72		12	13	45		
SGL45HYF	70	20.5	86	171	134	179.5	180	60	80	M10	17	15	60	15	15

part number	T1 mm	grease fitting	guide rail dimensions H1 mm	C mm	d×G×h mm	N mm	P mm	basic load rating dynamic C kN	static Co kN	allowable static moment MP N・m	MY N・m	MR N・m	mass block kg	guide rail kg/m	block size
SGL15HYF	9	pressed fitting	13.5	15	4.5×7.5×5.3	20	60	14.6	25.6	238	238	200	0.3	1.3	**15**
SGL20HYF	8	B-M6F	16	20	6×9.5×8.5			23.9	40.2	467	467	432	0.5	2.1	**20**
SGL25HYF	13.5		20	23	7×11×9			32.8	54.5	723	723	655	0.9	3.0	**25**
SGL30HYF	12		24	28	9×14×12		80	44.6	73.8	1,144	1,144	1,074	1.3	4.6	**30**
SGL35HYF	15.5		27.5	34				61.9	97.2	1,722	1,722	1,782	2.2	6.2	**35**
SGL45HYF	20	B-PT1/8	36.5	45	14×20×17	22.5	105	91.4	134.9	2,681	2,681	3,082	4.0	10.5	**45**

1kN≒102kgf 1N・m≒0.102kgf・m

part number	standard rail length L mm																maximum length mm
SGL15	160	220	280	340	400	460	520	580	640	700	760	820	880	940	1,000	1,120	2,000
SGL20	220	280	340	400	460	520	580	640	700	760	820	880	940	1,000	1,120	1,240	3,000
SGL25	220	280	340	400	460	520	580	640	700	760	820	880	940	1,000	1,120	1,240	3,000
SGL30	280	360	440	520	600	680	760	840	920	1,000	1,080	1,160	1,240	1,320	1,400	1,480	3,000
SGL35	280	360	440	520	600	680	760	840	920	1,000	1,080	1,160	1,240	1,320	1,400	1,480	3,000
SGL45	570	675	780	885	990	1,095	1,200	1,305	1,410	1,515	1,620	1,725	1,830	1,935	2,040	2,145	3,000

Rails exceeding the maximum specified length may be fabricated if joints are used. Please contact NB for assistance.

www.bergab.ru Берг АБ bergab@ya.ru Тел. (495)-228-06-21, факс (495) 223-3071

www.bergab.ru Берг АБ bergab@ya.ru Тел. (495)-228-06-21, факс (495) 223-3071

SGL-E TYPE

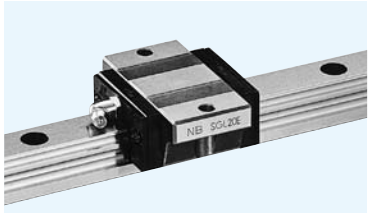

part number structure

example **SGL 15 E B 2 T1 - 589 D P / W2 FS LB F J - KGL**

- SGL type
- size
- block style
- seal (refer to page A-14)
  blank: with side-seals
  B: with side-seals + under-seals
  BW: with double-seals + under-seals
  BS: B + scraper
- number of blocks attached to one rail
- preload symbol
  blank: standard
  T1: light
  T2: medium
- total length of rail
- size of rail installation hole (D type rail is available only for SGL 15)
- accuracy grade
  blank: standard
  H: high
  P: precision
- symbol for number of axes※
  blank: single axis
  W2: 2 parallel axes
  W3: 3 parallel axes
- with Fiber Sheet
  (Fiber Sheet comes only with standard grease.)
- with low temperature black chrome treatment
- with rail mounting hole caps
- with bellows (refer to page A-16)
- symbol for grease
  blank: standard grease
  KGL: lithium-based grease
  KGU: urea-based grease
  KGF: anti-fretting grease
  GK: K-grease
  refer to page Eng-39~

※The symbol for the number of axes does not mean the number of rails ordered.

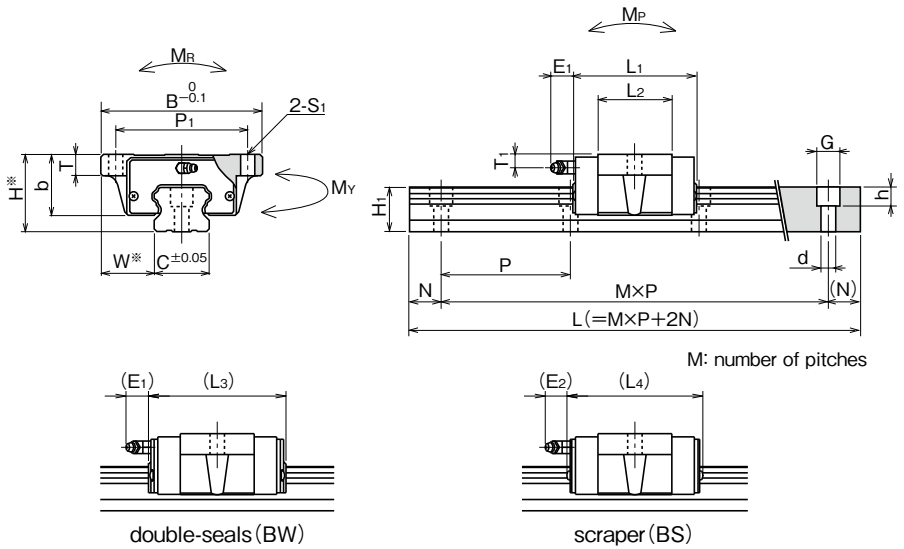

※Please refer to page A-44 for accuracy.

part number	assembly dimensions H mm	W mm	block dimensions B mm	L1 mm	L2 mm	L3 mm	L4 mm	P1 mm	S1 mm	T mm	b mm	E1 mm	E2 mm
SGL15E SGL15E-D	24	18.5	52	40.7	22.7	46.9	47.3	41	4.5	7	19.5	6	5.4
SGL20E	28	19.5	59	47.9	29.5	54.1	54.5	49	5.5	9	22	12	11
SGL25E	33	25	73	58.7	37.7	65.1	65.9	60	7	10	26		
SGL30E	42	31	90	68	40	76.6	75.6	72	9		32.5		
SGL35E	48	33	100	77	46	85.6	84.6	82		13	38		

part number	T1 mm	grease fitting	guide rail dimensions H1 mm	C mm	d×G×h mm	N mm	P mm	basic load rating dynamic C kN	static Co kN	allowable static moment MP MP2 N・m	MY MY2 N・m	MR N・m	mass block kg	guide rail kg/m	block size
SGL15E SGL15E-D	5	pressed fitting	13.5	15	3.5×6×4.5 4.5×7.5×5.3	20	60	7.29	9.46	37 252	37 252	74	0.1	1.3	15
SGL20E	6	B-M6F	16	20	6×9.5×8.5			11.91	14.81	72 447	72 447	159	0.2	2.1	20
SGL25E	6.5		20	23	7×11×9			17.0	21.2	123 751	123 751	255	0.4	3.0	25
SGL30E	9		24	28			80	23.0	28.7	195 1,263	195 1,263	418	0.6	4.6	30
SGL35E	8.5		27.5	34	9×14×12			32.0	37.8	294 1,873	294 1,873	693	0.9	6.2	35

1kN≒102kgf 1N・m≒0.102kgf・m

part number	standard rail length L mm																maximum length mm
SGL15	160	220	280	340	400	460	520	580	640	700	760	820	880	940	1,000	1,120	1,240
SGL20	220	280	340	400	460	520	580	640	700	760	820	880	940	1,000	1,120	1,240	1,360
SGL25	220	280	340	400	460	520	580	640	700	760	820	880	940	1,000	1,120	1,240	1,360
SGL30	280	360	440	520	600	680	760	840	920	1,000	1,080	1,160	1,240	1,320	1,400	1,480	1,640
SGL35	280	360	440	520	600	680	760	840	920	1,000	1,080	1,160	1,240	1,320	1,400	1,480	1,640

Rails exceeding the maximum specified length may be fabricated if joints are used. Please contact NB for assistance.

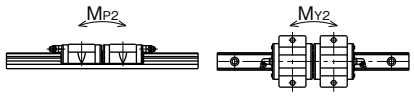

When two blocks are used in close contact.

www.bergab.ru Берг АБ bergab@ya.ru Тел. (495)-228-06-21, факс (495) 223-3071

www.bergab.ru Берг АБ bergab@ya.ru Тел. (495)-228-06-21, факс (495) 223-3071

SGL-TE TYPE

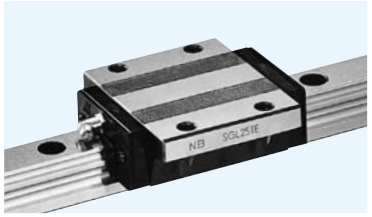

part number structure

example **SGL 15 TE B 2 T1 - 589 D P / W2 FS LB F J - KGL**

- SGL type
- size
- block style
- seal (refer to page A-14)
  blank: with side-seals
  B: with side-seals + under-seals
  BW: with double-seals + under-seals
  BS: B + scraper
- number of blocks attached to one rail
- preload symbol
  blank: standard
  T1: light
  T2: medium
- total length of rail
- size of rail installation hole (D type rail is available only for SGL 15)
- accuracy grade
  blank: standard
  H: high
  P: precision
- symbol for number of axes※
  blank: single axis
  W2: 2 parallel axes
  W3: 3 parallel axes
- with Fiber Sheet
  (Fiber Sheet comes only with standard grease.)
- with low temperature black chrome treatment
- with rail mounting hole caps
- with bellows (refer to page A-16)
- symbol for grease
  blank: standard grease
  KGL: lithium-based grease
  KGU: urea-based grease
  KGF: anti-fretting grease
  GK: K-grease
  refer to page Eng-39~

※The symbol for the number of axes does not mean the number of rails ordered.

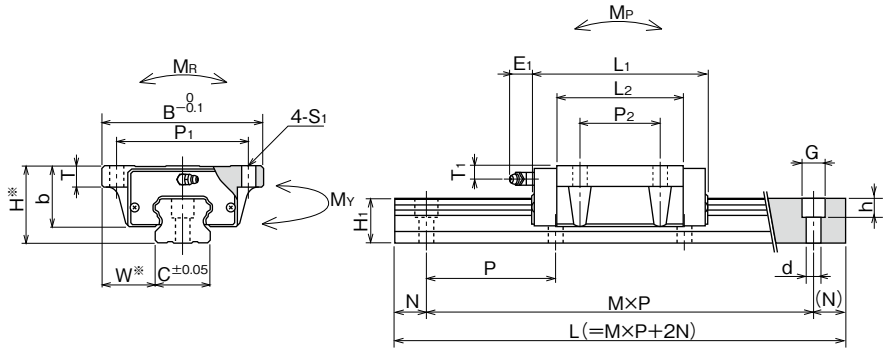

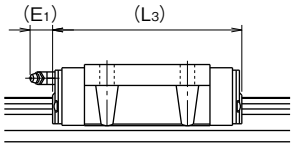

double-seals(BW)

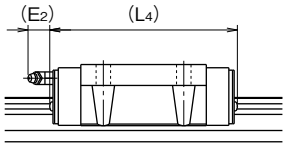

scraper(BS)

※Please refer to page A-44 for accuracy.

part number	assembly dimensions H mm	W mm	block dimensions B mm	L1 mm	L2 mm	L3 mm	L4 mm	P1 mm	P2 mm	S1 mm	T mm	b mm	E1 mm	E2 mm
SGL15TE SGL15TE-D	24	18.5	52	56.5	38.5	62.7	63.1	41	26	4.5	7	19.5	6	5.4
SGL20TE	28	19.5	59	65.8	47.4	72.0	72.4	49	32	5.5	9	22	12	11
SGL25TE	33	25	73	80	59	86.4	87.2	60	35	7	10	26		
SGL30TE	42	31	90	95.7	67.7	104.3	103.3	72	40	9		32.5		
SGL35TE	48	33	100	109	78	117.6	116.6	82	50		13	38		

T1 mm	grease fitting	guide rail dimensions H1 mm	C mm	d×G×h mm	N mm	P mm	basic load rating dynamic C kN	static Co kN	allowable static moment MP N・m	MY N・m	MR N・m	mass block kg	guide rail kg/m	block size
5	pressed fitting	13.5	15	3.5×6×4.5 4.5×7.5×5.3	20	60	10.6	16.2	100	100	127	0.2	1.3	15
6	B-M6F	16	20	6×9.5×8.5			16.4	23.3	165	165	250	0.3	2.1	20
6.5		20	23	7×11×9			24.8	36.3	335	335	437	0.6	3.0	25
9		24	28			80	33.6	49.2	529	529	716	1.0	4.6	30
8.5		27.5	34	9×14×12			46.7	64.8	796	796	1,188	1.5	6.2	35

1kN≒102kgf 1N・m≒0.102kgf・m

part number	standard rail length L mm															
SGL15	160	220	280	340	400	460	520	580	640	700	760	820	880	940	1,000	1,120
SGL20	220	280	340	400	460	520	580	640	700	760	820	880	940	1,000	1,120	1,240
SGL25	220	280	340	400	460	520	580	640	700	760	820	880	940	1,000	1,120	1,240
SGL30	280	360	440	520	600	680	760	840	920	1,000	1,080	1,160	1,240	1,320	1,400	1,480
SGL35	280	360	440	520	600	680	760	840	920	1,000	1,080	1,160	1,240	1,320	1,400	1,480

Rails exceeding the maximum specified length may be fabricated if joints are used. Please contact NB for assistance.

																	maximum length mm
1,240	1,360	1,480															2,000
1,360	1,480	1,600	1,660	1,720	1,840	1,960											3,000
1,360	1,480	1,600	1,660	1,720	1,840	1,960											3,000
1,640	1,720	1,800	1,880	1,960													3,000
1,640	1,720	1,800	1,880	1,960													3,000

www.bergab.ru Берг АБ bergab@ya.ru Тел. (495)-228-06-21, факс (495) 223-3071

www.bergab.ru Берг АБ bergab@ya.ru Тел. (495)-228-06-21, факс (495) 223-3071

SGL-HTE TYPE

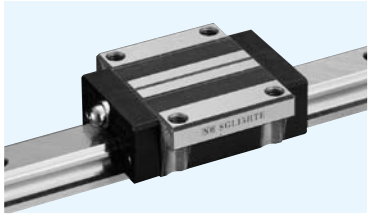

part number structure

example **SGL 15 HTE B 2 T1 - 589 P / W2 FS LB F J - KGL**

- SGL type
- size
- block style
- seal (refer to page A-14)
  blank: with side-seals
  B: with side-seals + under-seals
  BW: with double-seals + under-seals
  BS: B + scraper
- number of blocks attached to one rail
- preload symbol
  blank: standard
  T1: light
  T2: medium
- total length of rail
- accuracy grade
  blank: standard
  H: high
  P: precision
- symbol for number of axes※
  blank: single axis
  W2: 2 parallel axes
  W3: 3 parallel axes
- with low temperature black chrome treatment
- with Fiber Sheet
  (Fiber Sheet comes only with standard grease.)
- with rail mounting hole caps
- with bellows (refer to page A-16)
- symbol for grease
  blank: standard grease
  KGL: lithium-based grease
  KGU: urea-based grease
  KGF: anti-fretting grease
  GK: K-grease
  refer to page Eng-39~

※The symbol for the number of axes does not mean the number of rails ordered.

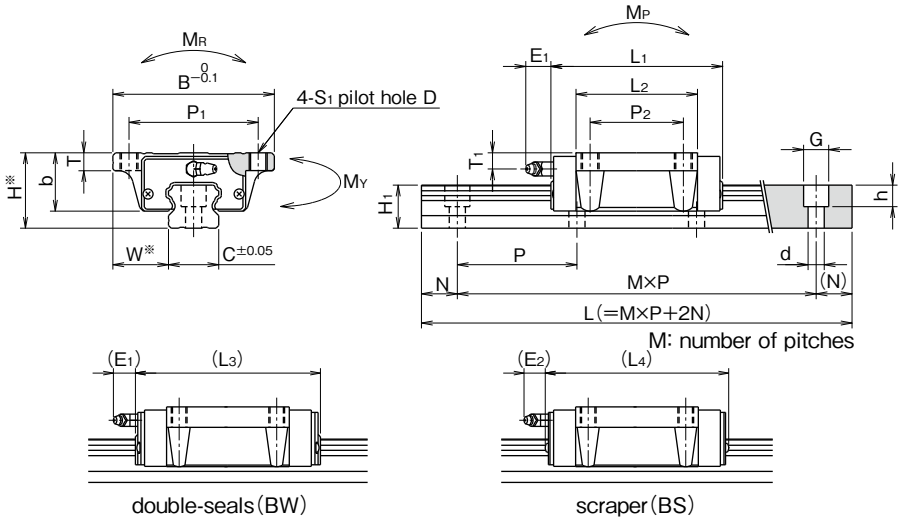

※Please refer to page A-44 for accuracy.

part number	assembly dimensions H mm	W mm	block dimensions B mm	L1 mm	L2 mm	L3 mm	L4 mm	P1 mm	P2 mm	S1	D mm	T mm	b mm	E1 mm	E2 mm
SGL15HTE	24	16	47	56.5	38.5	62.7	63.1	38	30	M5	4.4	7.5	19.7	6	5.4
SGL20HTE	30	21.5	63	71.6	53.2	77.8	78.2	53	40	M6	5.4	10.5	24	12	11
SGL25HTE	36	23.5	70	80	59	86.4	87.2	57	45	M8	6.8	12.5	29		
SGL30HTE	42	31	90	95.7	67.7	104.3	103.3	72	52	M10	8.5	10	32.5		
SGL35HTE	48	33	100	109	78	117.6	116.6	82	62			13	38		
SGL45HTE	60	37.5	120	139	102	147.5	148	100	80	M12	10.5	15	50	15	15

T1 mm	grease fitting	guide rail dimensions H1 mm	C mm	d×G×h mm	N mm	P mm	basic load rating dynamic C kN	static Co kN	allowable static moment MP N・m	MY N・m	MR N・m	mass block kg	guide rail kg/m	block size
5	pressed fitting	13.5	15	4.5×7.5×5.3	20	60	10.6	16.2	100	100	127	0.2	1.3	**15**
8	B-M6F	16	20	6×9.5×8.5			18.4	27.5	227	227	296	0.4	2.1	**20**
9.5		20	23	7×11×9			24.8	36.3	335	335	437	0.6	3.0	**25**
9		24	28	9×14×12		80	33.6	49.2	529	529	716	1.0	4.6	**30**
8.5		27.5	34				46.7	64.8	796	796	1,188	1.5	6.2	**35**
10	B-PT1/8	36.5	45	14×20×17	22.5	105	74.8	101.2	1,553	1,553	2,312	3.1	10.5	**45**

1kN≒102kgf 1N・m≒0.102kgf・m

part number	standard rail length L mm																maximum length mm
SGL15	160	220	280	340	400	460	520	580	640	700	760	820	880	940	1,000	1,120	2,000
SGL20	220	280	340	400	460	520	580	640	700	760	820	880	940	1,000	1,120	1,240	3,000
SGL25	220	280	340	400	460	520	580	640	700	760	820	880	940	1,000	1,120	1,240	3,000
SGL30	280	360	440	520	600	680	760	840	920	1,000	1,080	1,160	1,240	1,320	1,400	1,480	3,000
SGL35	280	360	440	520	600	680	760	840	920	1,000	1,080	1,160	1,240	1,320	1,400	1,480	3,000
SGL45	570	675	780	885	990	1,095	1,200	1,305	1,410	1,515	1,620	1,725	1,830	1,935	2,040	2,145	3,000

Rails exceeding the maximum specified length may be fabricated if joints are used. Please contact NB for assistance.

www.bergab.ru Берг АБ bergab@ya.ru Тел. (495)-228-06-21, факс (495) 223-3071

www.bergab.ru Берг АБ bergab@ya.ru Тел. (495)-228-06-21, факс (495) 223-3071

SGL-HYE TYPE

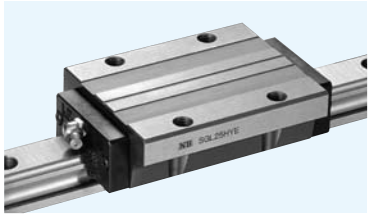

part number structure

example **SGL 15 HYE B 2 T1 - 589 P / W2 FS LB F J - KGL**

- SGL type
- size
- block style
- seal (refer to page A-14)
  blank: with side-seals
  B: with side-seals + under-seals
  BW: with double-seals + under-seals
  BS: B + scraper
- number of blocks attached to one rail
- preload symbol
  blank: standard
  T1: light
  T2: medium
- total length of rail
- accuracy grade
  blank: standard
  H: high
  P: precision
- symbol for number of axes※
  blank: single axis
  W2: 2 parallel axes
  W3: 3 parallel axes
- with low temperature black chrome treatment
- with Fiber Sheet
  (Fiber Sheet comes only with standard grease.)
- with rail mounting hole caps
- with bellows (refer to page A-16)
- symbol for grease
  blank: standard grease
  KGL: lithium-based grease
  KGU: urea-based grease
  KGF: anti-fretting grease
  GK: K-grease
  refer to page Eng-39~

※The symbol for the number of axes does not mean the number of rails ordered.

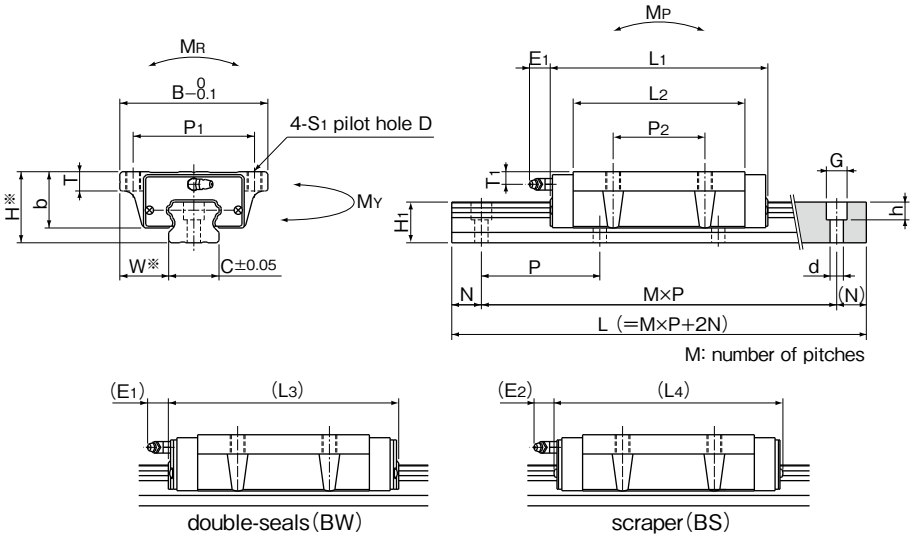

※Please refer to page A-44 for accuracy.

part number	assembly dimensions H mm	W mm	block dimensions B mm	L1 mm	L2 mm	L3 mm	L4 mm	P1 mm	P2 mm	S1	D mm	T mm	b mm	E1 mm	E2 mm
SGL15HYE	24	16	47	79	61	85.2	85.6	38	30	M5	4.4	7.5	19.7	6	5.4
SGL20HYE	30	21.5	63	96	77.6	102.2	102.6	53	40	M6	5.4	10.5	24	12	11
SGL25HYE	36	23.5	70	109	88	115.4	116.2	57	45	M8	6.8	12.5	29		
SGL30HYE	42	31	90	129	101	137.6	136.6	72	52	M10	8.5	10	32.5		
SGL35HYE	48	33	100	147	116	155.6	154.6	82	62			13	38		
SGL45HYE	60	37.5	120	171	134	179.5	180	100	80	M12	10.5	15	50	15	15

T1 mm	grease fitting	guide rail dimensions H1 mm	C mm	d×G×h mm	N mm	P mm	basic load rating dynamic C kN	static Co kN	allowable static moment MP N・m	MY N・m	MR N・m	mass block kg	guide rail kg/m	block size
5	pressed fitting	13.5	15	4.5×7.5×5.3	20	60	14.6	25.6	238	238	200	0.3	1.3	**15**
8	B-M6F	16	20	6×9.5×8.5			23.9	40.2	467	467	432	0.7	2.1	**20**
9.5		20	23	7×11×9			32.8	54.5	723	723	655	1.0	3.0	**25**
9		24	28	9×14×12		80	44.6	73.8	1,144	1,144	1,074	1.5	4.6	**30**
8.5		27.5	34				61.9	97.2	1,722	1,722	1,782	2.2	6.2	**35**
10	B-PT1/8	36.5	45	14×20×17	22.5	105	91.4	134.9	2,681	2,681	3,082	4.0	10.5	**45**

1kN≒102kgf 1N・m≒0.102kgf・m

part number	standard rail length L mm																maximum length mm
SGL15	160	220	280	340	400	460	520	580	640	700	760	820	880	940	1,000	1,120	2,000
SGL20	220	280	340	400	460	520	580	640	700	760	820	880	940	1,000	1,120	1,240	3,000
SGL25	220	280	340	400	460	520	580	640	700	760	820	880	940	1,000	1,120	1,240	3,000
SGL30	280	360	440	520	600	680	760	840	920	1,000	1,080	1,160	1,240	1,320	1,400	1,480	3,000
SGL35	280	360	440	520	600	680	760	840	920	1,000	1,080	1,160	1,240	1,320	1,400	1,480	3,000
SGL45	570	675	780	885	990	1,095	1,200	1,305	1,410	1,515	1,620	1,725	1,830	1,935	2,040	2,145	3,000

Rails exceeding the maximum specified length may be fabricated if joints are used. Please contact NB for assistance.

www.bergab.ru Берг АБ bergab@ya.ru Тел. (495)-228-06-21, факс (495) 223-3071

www.bergab.ru Берг АБ bergab@ya.ru Тел. (495)-228-06-21, факс (495) 223-3071

SGL-HTEX TYPE

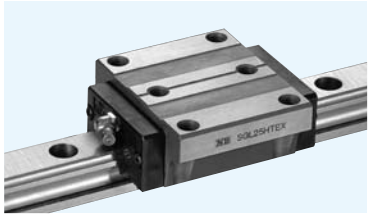

part number structure

example **SGL 15 HTEX B 2 T1 - 589 P / W2 FS LB F J - KGL**

- SGL type
- size
- block style
- seal (refer to page A-14)
  blank: with side-seals
  B: with side-seals + under-seals
  BW: with double-seals + under-seals
  BS: B + scraper
- number of blocks attached to one rail
- preload symbol
  blank: standard
  T1: light
  T2: medium
- total length of rail
- accuracy grade
  blank: standard
  H: high
  P: precision
- symbol for number of axes※
  blank: single axis
  W2: 2 parallel axes
  W3: 3 parallel axes
- with Fiber Sheet
  (Fiber Sheet comes only with standard grease.)
- with low temperature black chrome treatment
- with rail mounting hole caps
- with bellows (refer to page A-16)
- symbol for grease
  blank: standard grease
  KGL: lithium-based grease
  KGU: urea-based grease
  KGF: anti-fretting grease
  GK: K-grease
  refer to page Eng-39~

※The symbol for the number of axes does not mean the number of rails ordered.

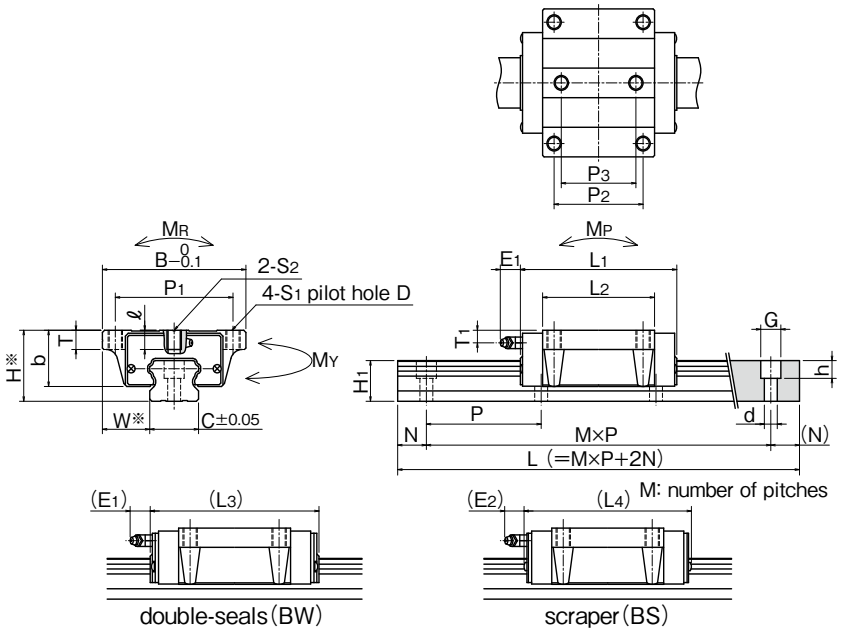

※Please refer to page A-44 for accuracy.

part number	assembly dimensions H mm	W mm	block dimensions B mm	L1 mm	L2 mm	L3 mm	L4 mm	P1 mm	P2 mm	S1	D mm	T mm	P3 mm	S2	ℓ mm	b mm
SGL15HTEX	24	16	47	56.5	38.5	62.7	63.1	38	30	M5	4.4	7.5	26	M5	6	19.7
SGL20HTEX	30	21.5	63	71.6	53.2	77.8	78.2	53	40	M6	5.4	10.5	35	M6	8	24
SGL25HTEX	36	23.5	70	80	59	86.4	87.2	57	45	M8	6.8	12.5	40	M8	10	29
SGL30HTEX	42	31	90	95.7	67.7	104.3	103.3	72	52	M10	8.5	10	44	M10	10	32.5
SGL35HTEX	48	33	100	109	78	117.6	116.6	82	62			13	52		13	38
SGL45HTEX	60	37.5	120	139	102	147.5	148	100	80	M12	10.5	15	60	M12	14	50

E1 mm	E2 mm	T1 mm	grease fitting	guide rail dimensions H1 mm	C mm	d×G×h mm	N mm	P mm	basic load rating dynamic C kN	static Co kN	allowable static moment MP N・m	MY N・m	MR N・m	mass block kg	guide rail kg/m	block size
6	5.4	5	pressed fitting	13.5	15	4.5×7.5×5.3	20	60	10.6	16.2	100	100	127	0.2	1.3	**15**
12	11	8	B-M6F	16	20	6×9.5×8.5			18.4	27.5	227	227	296	0.4	2.1	**20**
		9.5		20	23	7×11×9			24.8	36.3	335	335	437	0.6	3.0	**25**
		9		24	28	9×14×12		80	33.6	49.2	529	529	716	1.0	4.6	**30**
		8.5		27.5	34				46.7	64.8	796	796	1,188	1.5	6.2	**35**
15	15	10	B-PT1/8	36.5	45	14×20×17	22.5	105	74.8	101.2	1,553	1,553	2,312	3.1	10.5	**45**

1kN≒102kgf 1N・m≒0.102kgf・m

part number	standard rail length L mm																maximum length mm
SGL15	160	220	280	340	400	460	520	580	640	700	760	820	880	940	1,000	1,120	2,000
SGL20	220	280	340	400	460	520	580	640	700	760	820	880	940	1,000	1,120	1,240	3,000
SGL25	220	280	340	400	460	520	580	640	700	760	820	880	940	1,000	1,120	1,240	3,000
SGL30	280	360	440	520	600	680	760	840	920	1,000	1,080	1,160	1,240	1,320	1,400	1,480	3,000
SGL35	280	360	440	520	600	680	760	840	920	1,000	1,080	1,160	1,240	1,320	1,400	1,480	3,000
SGL45	570	675	780	885	990	1,095	1,200	1,305	1,410	1,515	1,620	1,725	1,830	1,935	2,040	2,145	3,000

Rails exceeding the maximum specified length may be fabricated if joints are used. Please contact NB for assistance.

www.bergab.ru Берг АБ bergab@ya.ru Тел. (495)-228-06-21, факс (495) 223-3071

www.bergab.ru Берг АБ bergab@ya.ru Тел. (495)-228-06-21, факс (495) 223-3071

GL-F TYPE

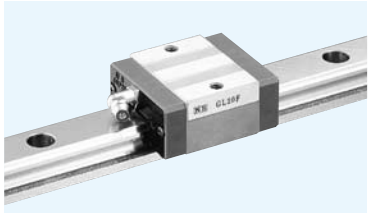

part number structure

example **GL 15 F B 2 T1 - 589 D P / W2 LB F J - KGL**

- GL type
- size
- block style
- seal (refer to page A-14)
  - B (standard): with side-seals + under-seals
  - BW: with double-seals + under-seals
  - BS: B + scraper
- number of blocks attached to one rail
- preload symbol
  - blank: standard
  - T1: light
  - T2: medium
- total length of rail
- size of rail installation hole (D type rail is available only for GL 15)
- accuracy grade
  - blank: standard
  - H: high
  - P: precision
- symbol for number of axes※
  - blank: single axis
  - W2: 2 parallel axes
  - W3: 3 parallel axes
- with low temperature black chrome treatment
- with rail mounting hole caps
- with bellows (refer to page A-16)
- symbol for grease
  - blank: standard grease
  - KGL: lithium-based grease
  - KGU: urea-based grease
  - KGF: anti-fretting grease
  - GK: K-grease
  - refer to page Eng-39~
  - Fiber Sheet comes only with standard grease.

※The symbol for the number of axes does not mean the number of rails ordered.

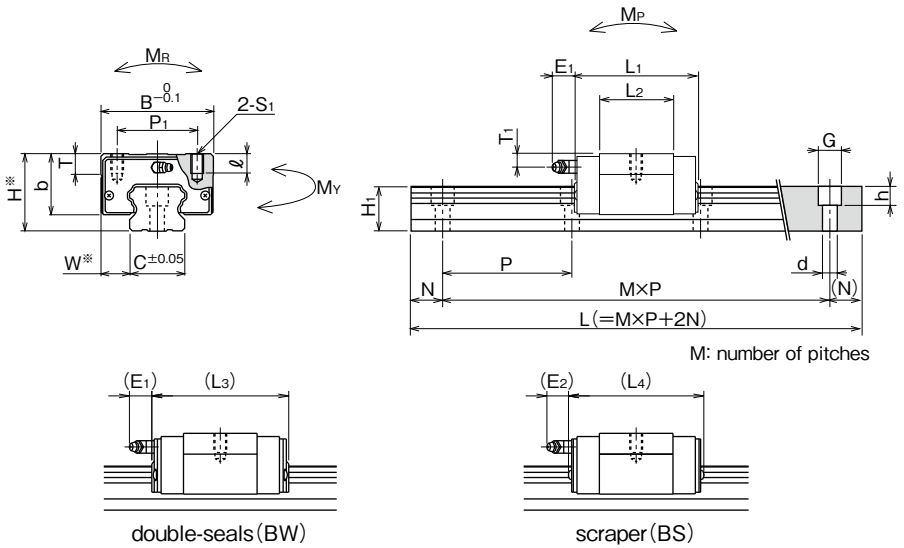

※Please refer to page A-44 for accuracy.

part number	assembly dimensions H mm	W mm	block dimensions B mm	L1 mm	L2 mm	L3 mm	L4 mm	P1 mm	S1	ℓ mm	T mm	b mm	E1 mm	E2 mm
GL15F GL15F-D	24	9.5	34	40.7	22.7	46.9	47.3	26	M4	7	6	19.5	6	5.4
GL20F	28	11	42	47.9	29.5	54.1	54.5	32	M5	8	7.5	22	12	11
GL25F	33	12.5	48	58.7	37.7	65.1	65.9	35	M6	9	8	26		
GL30F	42	16	60	68	40	76.6	75.6	40	M8	12	9	32.5		
GL35F	48	18	70	77	46	85.6	84.6	50			13	38		

T1 mm	grease fitting	guide rail dimensions H1 mm	C mm	d×G×h mm	N mm	P mm	basic load rating dynamic C kN	static Co kN	allowable static moment MP / MP2 N・m	MY / MY2 N・m	MR N・m	mass block kg	guide rail kg/m	block size
5	pressed fitting	13.5	15	3.5×6×4.5 4.5×7.5×5.3	20	60	7.29	9.46	37 252	37 252	74	0.1	1.3	15
6	B-M6F	16	20	6×9.5×8.5			11.91	14.81	72 447	72 447	159	0.2	2.1	20
6.5		20	23	7×11×9			17.0	21.2	123 751	123 751	255	0.3	3.0	25
9		24	28			80	23.0	28.7	195 1,263	195 1,263	418	0.5	4.6	30
8.5		27.5	34	9×14×12			32.0	37.8	294 1,873	294 1,873	693	0.8	6.2	35

1kN≒102kgf 1N・m≒0.102kgf・m

part number	standard rail length L mm															
GL15	160	220	280	340	400	460	520	580	640	700	760	820	880	940	1,000	1,120
GL20	220	280	340	400	460	520	580	640	700	760	820	880	940	1,000	1,120	1,240
GL25	220	280	340	400	460	520	580	640	700	760	820	880	940	1,000	1,120	1,240
GL30	280	360	440	520	600	680	760	840	920	1,000	1,080	1,160	1,240	1,320	1,400	1,480
GL35	280	360	440	520	600	680	760	840	920	1,000	1,080	1,160	1,240	1,320	1,400	1,480

								maximum length mm
1,240	1,360	1,480						2,000
1,360	1,480	1,600	1,660	1,720	1,840	1,960		3,000
1,360	1,480	1,600	1,660	1,720	1,840	1,960		3,000
1,640	1,720	1,800	1,880	1,960				3,000
1,640	1,720	1,800	1,880	1,960				3,000

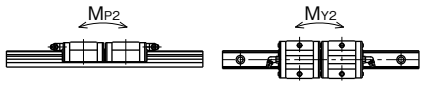

When two blocks are used in close contact.

www.bergab.ru Берг АБ bergab@ya.ru Тел. (495)-228-06-21, факс (495) 223-3071

www.bergab.ru Берг АБ bergab@ya.ru Тел. (495)-228-06-21, факс (495) 223-3071

GL-TF TYPE

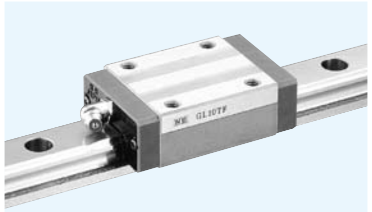

part number structure

example GL 15 TF B 2 T1 - 589 D P / W2 LB F J - KGL

- GL type
- size
- block style
- seal (refer to page A-14)
  B (standard): with side-seals + under-seals
  BW: with double-seals + under-seals
  BS: B + scraper
- number of blocks attached to one rail
- preload symbol
  blank: standard
  T1: light
  T2: medium
- total length of rail
- size of rail installation hole (D type rail is available only for GL 15)
- accuracy grade
  blank: standard
  H: high
  P: precision
- symbol for number of axes※
  blank: single axis
  W2: 2 parallel axes
  W3: 3 parallel axes
- with low temperature black chrome treatment
- with rail mounting hole caps
- with bellows (refer to page A-16)
- symbol for grease
  blank: standard grease
  KGL: lithium-based grease
  KGU: urea-based grease
  KGF: anti-fretting grease
  GK: K-grease
  refer to page Eng-39～
  Fiber Sheet comes only with standard grease.

※The symbol for the number of axes does not mean the number of rails ordered.

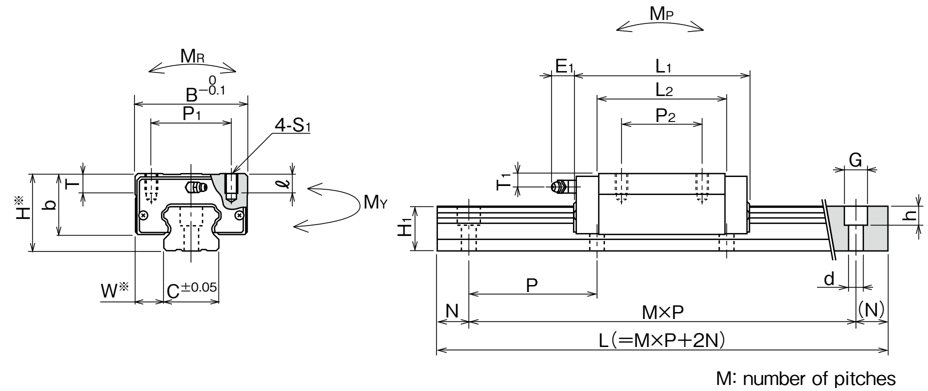

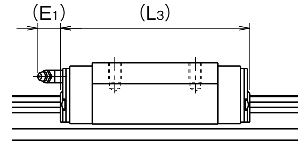

double-seals (BW)

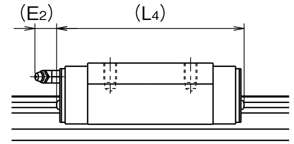

scraper (BS)

※Please refer to page A-44 for accuracy.

part number	assembly dimensions H mm	assembly dimensions W mm	block dimensions B mm	L1 mm	L2 mm	L3 mm	L4 mm	P1 mm	P2 mm	S1	ℓ mm	T mm	b mm	E1 mm	E2 mm
GL15TF GL15TF-D	24	9.5	34	56.5	38.5	62.7	63.1	26	26	M4	7	6	19.5	6	5.4
GL20TF	28	11	42	65.8	47.4	72.0	72.4	32	32	M5	8	7.5	22	12	11
GL25TF	33	12.5	48	80	59	86.4	87.2	35	35	M6	9	8	26	12	11
GL30TF	42	16	60	95.7	67.7	104.3	103.3	40	40	M8	12	9	32.5	12	11
GL35TF	48	18	70	109	78	117.6	116.6	50	50	M8	12	13	38	12	11

T1 mm	grease fitting	guide rail dimensions H1 mm	C mm	d×G×h mm	N mm	P mm	basic load rating dynamic C kN	static Co kN	allowable static moment MP N·m	MY N·m	MR N·m	mass block kg	guide rail kg/m	block size
5	pressed fitting	13.5	15	3.5×6×4.5 4.5×7.5×5.3	20	60	10.6	16.2	100	100	127	0.2	1.3	15
6	B-M6F	16	20	6×9.5×8.5	20	60	16.4	23.3	165	165	250	0.3	2.1	20
6.5	B-M6F	20	23	7×11×9	20	60	24.8	36.3	335	335	437	0.4	3.0	25
9	B-M6F	24	28	7×11×9	20	80	33.6	49.2	529	529	716	0.8	4.6	30
8.5	B-M6F	27.5	34	9×14×12	20	80	46.7	64.8	796	796	1,188	1.3	6.2	35

1kN≒102kgf　1N·m≒0.102kgf·m

part number	standard rail length L mm	maximum length mm
GL15	160 220 280 340 400 460 520 580 640 700 760 820 880 940 1,000 1,120 1,240 1,360 1,480	2,000
GL20	220 280 340 400 460 520 580 640 700 760 820 880 940 1,000 1,120 1,240 1,360 1,480 1,600 1,660 1,720 1,840 1,960	3,000
GL25	220 280 340 400 460 520 580 640 700 760 820 880 940 1,000 1,120 1,240 1,360 1,480 1,600 1,660 1,720 1,840 1,960	3,000
GL30	280 360 440 520 600 680 760 840 920 1,000 1,080 1,160 1,240 1,320 1,400 1,480 1,640 1,720 1,800 1,880 1,960	3,000
GL35	280 360 440 520 600 680 760 840 920 1,000 1,080 1,160 1,240 1,320 1,400 1,480 1,640 1,720 1,800 1,880 1,960	3,000

www.bergab.ru Берг АБ bergab@ya.ru Тел. (495)-228-06-21, факс (495) 223-3071

www.bergab.ru Берг АБ bergab@ya.ru Тел. (495)-228-06-21, факс (495) 223-3071

GL-HTF TYPE

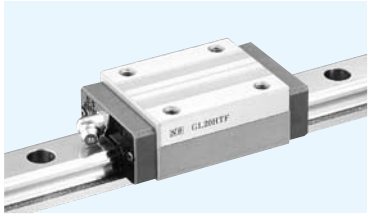

part number structure

example **GL 20 HTF B 2 T1 - 589 P / W2 LB F J - KGL**

- GL type
- size
- block style
- seal (refer to page A-14)
  B (standard): with side-seals + under-seals
  BW: with double-seals + under-seals
  BS: B + scraper
- number of blocks attached to one rail
- preload symbol
  blank: standard
  T1: light
  T2: medium
- total length of rail
- accuracy grade
  blank: standard
  H: high
  P: precision
- symbol for number of axes※
  blank: single axis
  W2: 2 parallel axes
  W3: 3 parallel axes
- with low temperature black chrome treatment
- with rail mounting hole caps
- with bellows (refer to page A-16)
- symbol for grease
  blank: standard grease
  KGL: lithium-based grease
  KGU: urea-based grease
  KGF: anti-fretting grease
  GK: K-grease
  refer to page Eng-39~
  Fiber Sheet comes only with standard grease.

※The symbol for the number of axes does not mean the number of rails ordered.

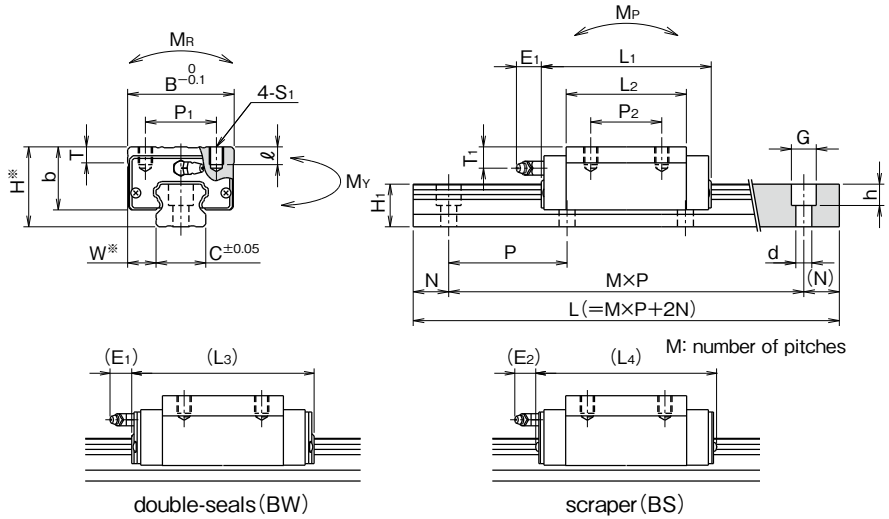

※Please refer to page A-44 for accuracy.

part number	assembly dimensions H mm	W mm	block dimensions B mm	L1 mm	L2 mm	L3 mm	L4 mm	P1 mm	P2 mm	S1	ℓ mm	T mm	b mm	E1 mm	E2 mm
GL15HTF	28	9.5	34	56.5	38.5	62.7	63.1	26	26	M4	5	6	23.7	6	5.4
GL20HTF	30	12	44	71.6	53.2	77.8	78.2	32	36	M5	6	9.5	24	12	11
GL25HTF	40	12.5	48	80	59	86.4	87.2	35	35	M6	8	9	33		
GL30HTF	45	16	60	95.7	67.7	104.3	103.3	40	40	M8	10		35.5		
GL35HTF	55	18	70	109	78	117.6	116.6	50	50		12	13	45		
GL45HTF	70	20.5	86	139	102	147.5	148	60	60	M10	17	15	60	15	15

part number	T1 mm	grease fitting	guide rail dimensions H1 mm	C mm	d×G×h mm	N mm	P mm	basic load rating dynamic C kN	static Co kN	allowable static moment MP N・m	MY N・m	MR N・m	mass block kg	guide rail kg/m	block size
GL15HTF	9	pressed fitting	13.5	15	4.5×7.5×5.3	20	60	10.6	16.2	100	100	127	0.2	1.3	**15**
GL20HTF	8	B-M6F	16	20	6×9.5×8.5			18.4	27.5	227	227	296	0.4	2.1	**20**
GL25HTF	13.5		20	23	7×11×9			24.8	36.3	335	335	437	0.6	3.0	**25**
GL30HTF	12		24	28	9×14×12		80	33.6	49.2	529	529	716	0.9	4.6	**30**
GL35HTF	15.5		27.5	34				46.7	64.8	796	796	1,188	1.5	6.2	**35**
GL45HTF	20	B-PT1/8	36.5	45	14×20×17	22.5	105	74.8	101.2	1,553	1,553	2,312	3.1	10.5	**45**

1kN≒102kgf 1N・m≒0.102kgf・m

part number	standard rail length L mm																maximum length mm
GL15	160	220	280	340	400	460	520	580	640	700	760	820	880	940	1,000	1,120	2,000
GL20	220	280	340	400	460	520	580	640	700	760	820	880	940	1,000	1,120	1,240	3,000
GL25	220	280	340	400	460	520	580	640	700	760	820	880	940	1,000	1,120	1,240	3,000
GL30	280	360	440	520	600	680	760	840	920	1,000	1,080	1,160	1,240	1,320	1,400	1,480	3,000
GL35	280	360	440	520	600	680	760	840	920	1,000	1,080	1,160	1,240	1,320	1,400	1,480	3,000
GL45	570	675	780	885	990	1,095	1,200	1,305	1,410	1,515	1,620	1,725	1,830	1,935	2,040	2,145	3,000

www.bergab.ru Берг АБ bergab@ya.ru Тел. (495)-228-06-21, факс (495) 223-3071

www.bergab.ru Берг АБ bergab@ya.ru Тел. (495)-228-06-21, факс (495) 223-3071

GL-E TYPE

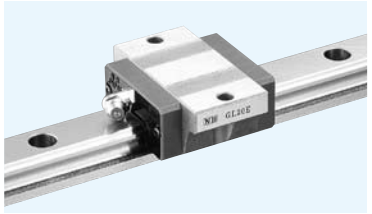

part number structure

example **GL 15 E B 2 T1 - 589 D P / W2 LB F J - KGL**

- GL type
- size
- block style
- seal (refer to page A-14)
  - **B (standard)**: with side-seals + under-seals
  - **BW**: with double-seals + under-seals
  - **BS**: B + scraper
- number of blocks attached to one rail
- preload symbol
  - **blank**: standard
  - **T1**: light
  - **T2**: medium
- total length of rail
- size of rail installation hole (D type rail is available only for GL 15)
- accuracy grade
  - **blank**: standard
  - **H**: high
  - **P**: precision
- symbol for number of axes※
  - **blank**: single axis
  - **W2**: 2 parallel axes
  - **W3**: 3 parallel axes
- with low temperature black chrome treatment
- with rail mounting hole caps
- with bellows (refer to page A-16)
- symbol for grease
  - **blank**: standard grease
  - **KGL**: lithium-based grease
  - **KGU**: urea-based grease
  - **KGF**: anti-fretting grease
  - **GK**: K-grease
  - refer to page Eng-39~
  - Fiber Sheet comes only with standard grease.

※The symbol for the number of axes does not mean the number of rails ordered.

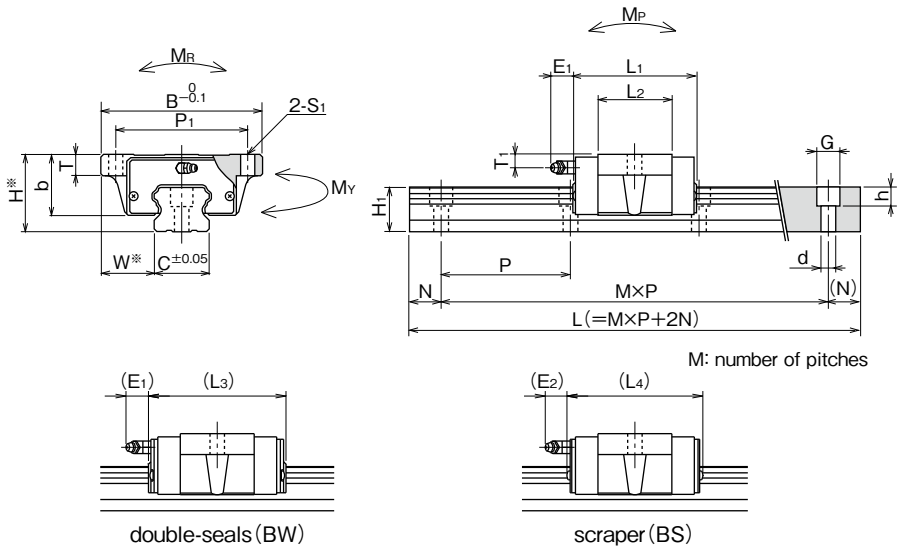

※Please refer to page A-44 for accuracy.

part number	assembly dimensions H mm	W mm	block dimensions B mm	L1 mm	L2 mm	L3 mm	L4 mm	P1 mm	S1 mm	T mm	b mm	E1 mm	E2 mm
GL15E GL15E-D	24	18.5	52	40.7	22.7	46.9	47.3	41	4.5	7	19.5	6	5.4
GL20E	28	19.5	59	47.9	29.5	54.1	54.5	49	5.5	9	22	12	11
GL25E	33	25	73	58.7	37.7	65.1	65.9	60	7	10	26		
GL30E	42	31	90	68	40	76.6	75.6	72	9		32.5		
GL35E	48	33	100	77	46	85.6	84.6	82		13	38		

part number	T1 mm	grease fitting	guide rail dimensions H1 mm	C mm	d×G×h mm	N mm	P mm	basic load rating dynamic C kN	static Co kN	allowable static moment MP / MP2 N・m	MY / MY2 N・m	MR N・m	mass block kg	guide rail kg/m	block size
GL15E GL15E-D	5	pressed fitting	13.5	15	3.5×6×4.5 4.5×7.5×5.3	20	60	7.29	9.46	37 252	37 252	74	0.1	1.3	15
GL20E	6	B-M6F	16	20	6×9.5×8.5			11.91	14.81	72 447	72 447	159	0.2	2.1	20
GL25E	6.5		20	23	7×11×9			17.0	21.2	123 751	123 751	255	0.4	3.0	25
GL30E	9		24	28			80	23.0	28.7	195 1,263	195 1,263	418	0.6	4.6	30
GL35E	8.5		27.5	34	9×14×12			32.0	37.8	294 1,873	294 1,873	693	0.9	6.2	35

1kN≒102kgf 1N・m≒0.102kgf・m

part number	standard rail length L mm															
GL15	160	220	280	340	400	460	520	580	640	700	760	820	880	940	1,000	1,120
GL20	220	280	340	400	460	520	580	640	700	760	820	880	940	1,000	1,120	1,240
GL25	220	280	340	400	460	520	580	640	700	760	820	880	940	1,000	1,120	1,240
GL30	280	360	440	520	600	680	760	840	920	1,000	1,080	1,160	1,240	1,320	1,400	1,480
GL35	280	360	440	520	600	680	760	840	920	1,000	1,080	1,160	1,240	1,320	1,400	1,480

								maximum length mm
1,240	1,360	1,480						2,000
1,360	1,480	1,600	1,660	1,720	1,840	1,960		3,000
1,360	1,480	1,600	1,660	1,720	1,840	1,960		3,000
1,640	1,720	1,800	1,880	1,960				3,000
1,640	1,720	1,800	1,880	1,960				3,000

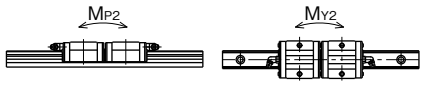

When two blocks are used in close contact.

www.bergab.ru Берг АБ bergab@ya.ru Тел. (495)-228-06-21, факс (495) 223-3071

www.bergab.ru Берг АБ bergab@ya.ru Тел. (495)-228-06-21, факс (495) 223-3071

GL-TE TYPE

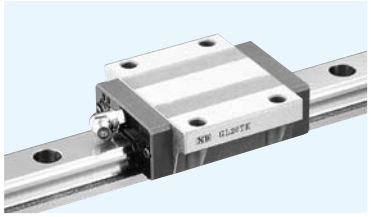

part number structure

example **GL 15 TE B 2 T1 - 589 D P / W2 LB F J - KGL**

- GL type
- size
- block style
- seal (refer to page A-14)
  - **B (standard)**: with side-seals + under-seals
  - **BW**: with double-seals + under-seals
  - **BS**: B + scraper
- number of blocks attached to one rail
- preload symbol
  - **blank**: standard
  - **T1**: light
  - **T2**: medium
- total length of rail
- size of rail installation hole (D type rail is available only for GL 15)
- accuracy grade
  - **blank**: standard
  - **H**: high
  - **P**: precision
- symbol for number of axes※
  - **blank**: single axis
  - **W2**: 2 parallel axes
  - **W3**: 3 parallel axes
- with low temperature black chrome treatment
- with rail mounting hole caps
- with bellows (refer to page A-16)
- symbol for grease
  - **blank**: standard grease
  - **KGL**: lithium-based grease
  - **KGU**: urea-based grease
  - **KGF**: anti-fretting grease
  - **GK**: K-grease
  - refer to page Eng-39~
  - Fiber Sheet comes only with standard grease.

※The symbol for the number of axes does not mean the number of rails ordered.

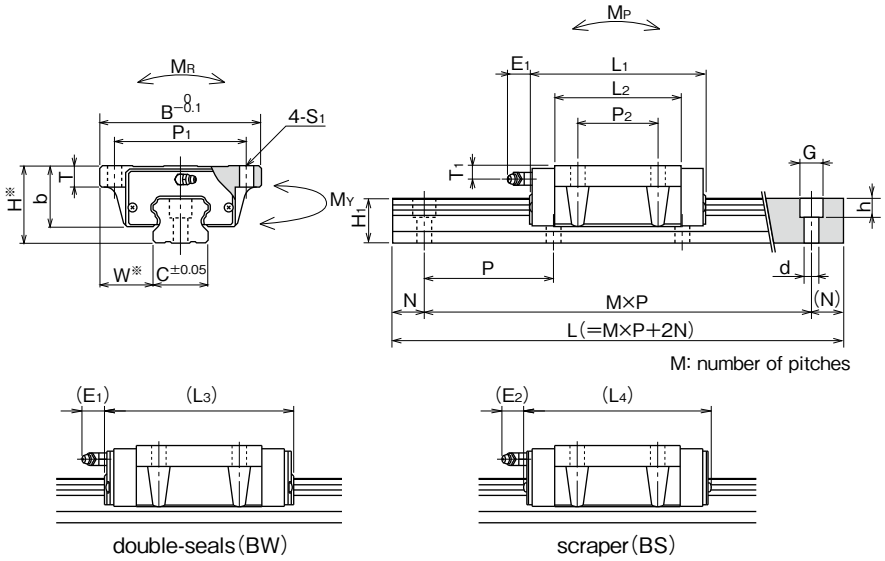

※Please refer to page A-44 for accuracy.

part number	assembly dimensions H mm	W mm	block dimensions B mm	L1 mm	L2 mm	L3 mm	L4 mm	P1 mm	P2 mm	S1 mm	T mm	b mm	E1 mm	E2 mm
GL15TE GL15TE-D	24	18.5	52	56.5	38.5	62.7	63.1	41	26	4.5	7	19.5	6	5.4
GL20TE	28	19.5	59	65.8	47.4	72.0	72.4	49	32	5.5	9	22	12	11
GL25TE	33	25	73	80	59	86.4	87.2	60	35	7	10	26		
GL30TE	42	31	90	95.7	67.7	104.3	103.3	72	40	9		32.5		
GL35TE	48	33	100	109	78	117.6	116.6	82	50		13	38		

T1 mm	grease fitting	guide rail dimensions H1 mm	C mm	d×G×h mm	N mm	P mm	basic load rating dynamic C kN	static Co kN	allowable static moment MP N・m	MY N・m	MR N・m	mass block kg	guide rail kg/m	block size
5	pressed fitting	13.5	15	3.5×6×4.5 4.5×7.5×5.3	20	60	10.6	16.2	100	100	127	0.2	1.3	15
6	B-M6F	16	20	6×9.5×8.5			16.4	23.3	165	165	250	0.3	2.1	20
6.5		20	23	7×11×9			24.8	36.3	335	335	437	0.6	3.0	25
9		24	28			80	33.6	49.2	529	529	716	1.0	4.6	30
8.5		27.5	34	9×14×12			46.7	64.8	796	796	1,188	1.5	6.2	35

1kN≒102kgf 1N・m≒0.102kgf・m

part number	standard rail length L mm																maximum length mm
GL15	160	220	280	340	400	460	520	580	640	700	760	820	880	940	1,000	1,120	1,240	1,360	1,480	2,000
GL20	220	280	340	400	460	520	580	640	700	760	820	880	940	1,000	1,120	1,240	1,360	1,480	1,600	1,660	1,720	1,840	1,960	3,000
GL25	220	280	340	400	460	520	580	640	700	760	820	880	940	1,000	1,120	1,240	1,360	1,480	1,600	1,660	1,720	1,840	1,960	3,000
GL30	280	360	440	520	600	680	760	840	920	1,000	1,080	1,160	1,240	1,320	1,400	1,480	1,640	1,720	1,800	1,880	1,960	3,000
GL35	280	360	440	520	600	680	760	840	920	1,000	1,080	1,160	1,240	1,320	1,400	1,480	1,640	1,720	1,800	1,880	1,960	3,000

www.bergab.ru Берг АБ bergab@ya.ru Тел. (495)-228-06-21, факс (495) 223-3071

www.bergab.ru Берг АБ bergab@ya.ru Тел. (495)-228-06-21, факс (495) 223-3071

GL-HTE TYPE

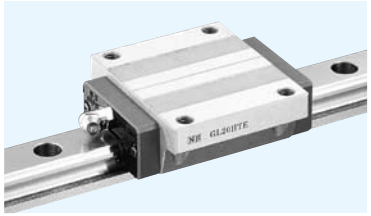

part number structure

example **GL 20 HTE B 2 T1 - 589 P / W2 LB F J - KGL**

- GL type
- size
- block style
- seal (refer to page A-14)
  B (standard): with side-seals + under-seals
  BW: with double-seals + under-seals
  BS: B + scraper
- number of blocks attached to one rail
- preload symbol
  blank: standard
  T1: light
  T2: medium
- total length of rail
- accuracy grade
  blank: standard
  H: high
  P: precision
- symbol for number of axes※
  blank: single axis
  W2: 2 parallel axes
  W3: 3 parallel axes
- with low temperature black chrome treatment
- with rail mounting hole caps
- with bellows (refer to page A-16)
- symbol for grease
  blank: standard grease
  KGL: lithium-based grease
  KGU: urea-based grease
  KGF: anti-fretting grease
  GK: K-grease
  refer to page Eng-39~
  Fiber Sheet comes only with standard grease.

※The symbol for the number of axes does not mean the number of rails ordered.

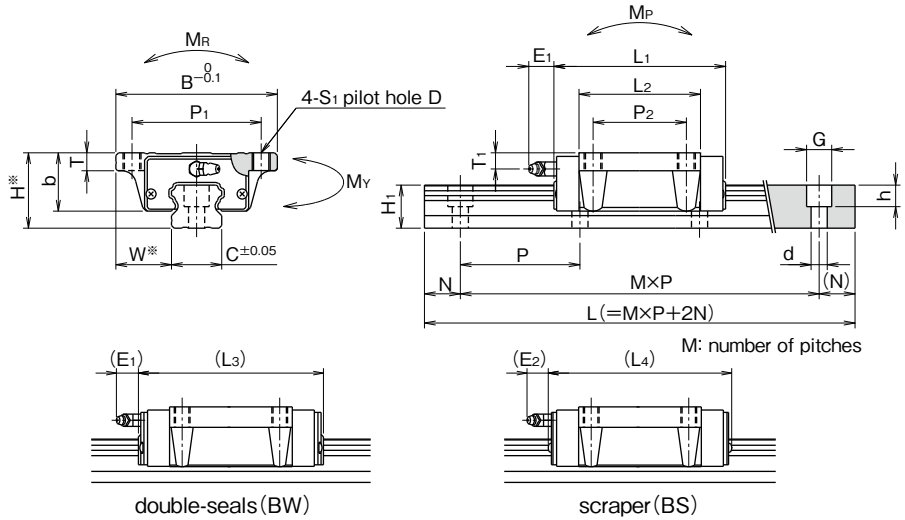

※Please refer to page A-44 for accuracy.

part number	assembly dimensions H mm	W mm	block dimensions B mm	L1 mm	L2 mm	L3 mm	L4 mm	P1 mm	P2 mm	S1	D mm	T mm	b mm	E1 mm	E2 mm
GL15HTE	24	16	47	56.5	38.5	62.7	63.1	38	30	M5	4.4	7.5	19.7	6	5.4
GL20HTE	30	21.5	63	71.6	53.2	77.8	78.2	53	40	M6	5.4	10.5	24	12	11
GL25HTE	36	23.5	70	80	59	86.4	87.2	57	45	M8	6.8	12.5	29		
GL30HTE	42	31	90	95.7	67.7	104.3	103.3	72	52	M10	8.5	10	32.5		
GL35HTE	48	33	100	109	78	117.6	116.6	82	62			13	38		
GL45HTE	60	37.5	120	139	102	147.5	148	100	80	M12	10.5	15	50	15	15

T1 mm	grease fitting	guide rail dimensions H1 mm	C mm	d×G×h mm	N mm	P mm	basic load rating dynamic C kN	static Co kN	allowable static moment MP N・m	MY N・m	MR N・m	mass block kg	guide rail kg/m	block size
5	pressed fitting	13.5	15	4.5×7.5×5.3	20	60	10.6	16.2	100	100	127	0.2	1.3	15
8	B-M6F	16	20	6×9.5×8.5			18.4	27.5	227	227	296	0.4	2.1	20
9.5		20	23	7×11×9			24.8	36.3	335	335	437	0.6	3.0	25
9		24	28	9×14×12		80	33.6	49.2	529	529	716	1.0	4.6	30
8.5		27.5	34				46.7	64.8	796	796	1,188	1.5	6.2	35
10	B-PT1/8	36.5	45	14×20×17	22.5	105	74.8	101.2	1,553	1,553	2,312	3.1	10.5	45

1kN≒102kgf 1N・m≒0.102kgf・m

part number	standard rail length L mm																maximum length mm
GL15	160	220	280	340	400	460	520	580	640	700	760	820	880	940	1,000	1,120	2,000
GL20	220	280	340	400	460	520	580	640	700	760	820	880	940	1,000	1,120	1,240	3,000
GL25	220	280	340	400	460	520	580	640	700	760	820	880	940	1,000	1,120	1,240	3,000
GL30	280	360	440	520	600	680	760	840	920	1,000	1,080	1,160	1,240	1,320	1,400	1,480	3,000
GL35	280	360	440	520	600	680	760	840	920	1,000	1,080	1,160	1,240	1,320	1,400	1,480	3,000
GL45	570	675	780	885	990	1,095	1,200	1,305	1,410	1,515	1,620	1,725	1,830	1,935	2,040	2,145	3,000

www.bergab.ru Берг АБ bergab@ya.ru Тел. (495)-228-06-21, факс (495) 223-3071

www.bergab.ru Берг АБ bergab@ya.ru Тел. (495)-228-06-21, факс (495) 223-3071

SGW-TF TYPE

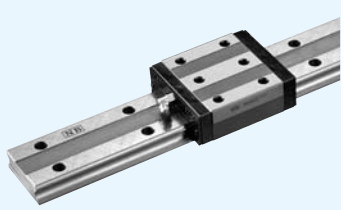

part number structure

example **SGW 21 TF B 2 T1 - 589 P / W2 FS LB F - KGL**

- SGW type
- size
- TF typeblock
- seal (refer to page A-14)
  blank: with side-seals
  B: with side-seals + under-seals
- number of blocks attached to one rail
- preload symbol
  blank: standard
  T1: light
  T2: medium
- total length of rail
- accuracy grade
  blank: standard
  H: high
  P: precision
- symbol for number of axes※
  blank: single axis
  W2: 2 parallel axes
  W3: 3 parallel axes
- with Fiber Sheet
  (Fiber Sheet comes only with standard grease.)
- with low temperature black chrome treatment
- with rail mounting hole caps
- symbol for grease
  blank: standard grease
  KGL: lithium-based grease
  KGU: urea-based grease
  KGF: anti-fretting grease
  GK: K-grease
  refer to page Eng-39~

※The symbol for the number of axes does not mean the number of rails ordered.

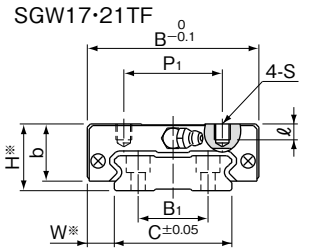

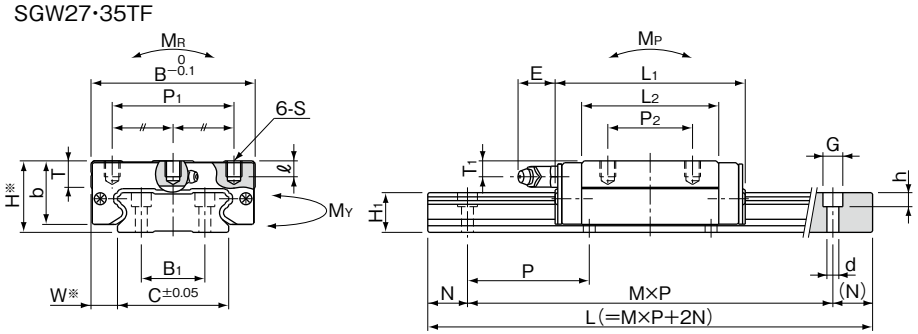

※Please refer to page A-79 for accuracy.

M: number of pitches

part number	assembly dimensions H mm	W mm	block dimensions B mm	L_1 mm	L_2 mm	P_1 mm	P_2 mm	S	ℓ mm	T mm	b mm	E mm	T_1 mm	grease fitting
SGW17TF	17	8.5	50	51	33.6	29	15	M4	4	—	14.5	2.5	4	pressed fitting
SGW21TF	21	8.5	54	58	40	31	19	M5	5	—	18	12	4.5	B-M6F
SGW27TF	27	10	62	71.8	51.8	46	32	M6	6	10	24		6	
SGW35TF	35	15.5	100	106.6	77.6	76	50	M8	8	14	31		8	

part number	guide rail dimensions H_1 mm	C mm	B_1 mm	d×G×h mm	N mm	P mm	basic load rating dynamic C kN	static Co kN	allowable static moment M_P N・m	M_Y N・m	M_R N・m	mass block kg	guide rail kg/m	block size
SGW17TF	9	33	18	4.5×7.5×5.3	15	40	4.8	8.6	43	43	161	0.13	2.05	**17**
SGW21TF	11	37	22			50	7	12	72	72	253	0.20	2.84	**21**
SGW27TF	15	42	24		20	60	13	22	172	172	496	0.38	4.43	**27**
SGW35TF	19	69	40	7×11×9		80	31	49	579	579	1,855	1.16	9.32	**35**

1kN≒102kgf 1N・m≒0.102kgf・m

part number	standard rail length L mm																	maximum length mm
SGW17	110	150	190	230	270	310	350	390	430	510	590	670	750	830	950	1,070	1,190	1,310	2,000
SGW21	130	180	230	280	330	380	430	480	530	630	730	830	930	1,030	1,180	1,330	1,480		2,000
SGW27	160	220	280	340	400	460	520	640	760	880	1,000	1,180	1,360	1,540	1,720	1,900			3,000
SGW35	280	360	440	520	600	680	760	920	1,080	1,240	1,400	1,640	1,880	2,120					3,000

Rails exceeding the maximum specified length may be fabricated if joints are used. Please contact NB for assistance.

www.bergab.ru Берг АБ bergab@ya.ru Тел. (495)-228-06-21, факс (495) 223-3071

www.bergab.ru Берг АБ bergab@ya.ru Тел. (495)-228-06-21, факс (495) 223-3071

SGW-TE TYPE

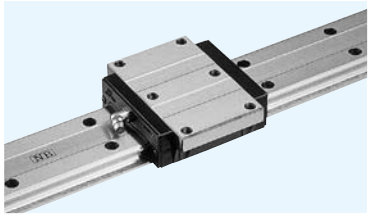

part number structure

example **SGW 21 TE B 2 T1 - 589 P / W2 FS LB F - KGL**

- SGW type
- size
- TE typeblock
- seal (refer to page A-14)
  blank: with side-seals
  B: with side-seals + under-seals
- number of blocks attached to one rail
- preload symbol
  blank: standard
  T1: light
  T2: medium
- total length of rail
- accuracy grade
  blank: standard
  H: high
  P: precision
- symbol for number of axes※
  blank: single axis
  W2: 2 parallel axes
  W3: 3 parallel axes
- with Fiber Sheet
  (Fiber Sheet comes only with standard grease.)
- with low temperature black chrome treatment
- with rail mounting hole caps
- symbol for grease
  blank: standard grease
  KGL: lithium-based grease
  KGU: urea-based grease
  KGF: anti-fretting grease
  GK: K-grease
  refer to page Eng-39~

※The symbol for the number of axes does not mean the number of rails ordered.

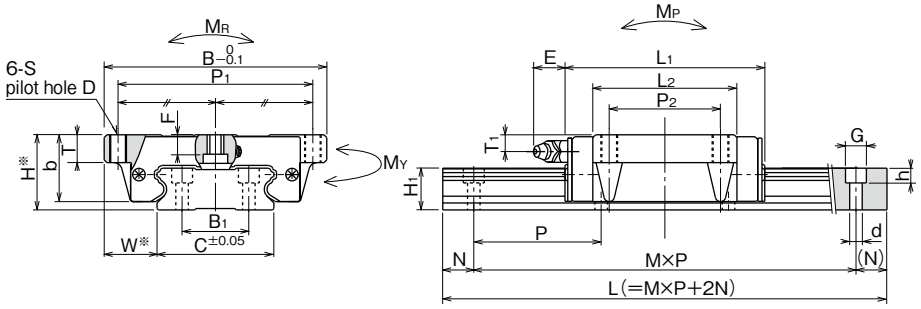

M: number of pitches

※Please refer to page A-79 for accuracy.

part number	assembly dimensions H mm	W mm	block dimensions B mm	L1 mm	L2 mm	P1 mm	P2 mm	S	D mm	F mm	T mm	b mm	E mm	T1 mm	grease fitting
SGW17TE	17	13.5	60	51	33.6	53	26	M4	3.3	3.2	6	14.5	2.5	4	pressed fitting
SGW21TE	21	15.5	68	58	40	60	29	M5	4.4	3.7	8	18	12	4.5	B-M6F
SGW27TE	27	19	80	71.8	51.8	70	40	M6	5.3	6	10	24		6	
SGW35TE	35	25.5	120	106.6	77.6	107	60	M8	6.8	8	14	31		8	

guide rail dimensions H1 mm	C mm	B1 mm	d×G×h mm	N mm	P mm	basic load rating dynamic C kN	static Co kN	allowable static moment MP N・m	MY N・m	MR N・m	mass block kg	guide rail kg/m	block size
9	33	18	4.5×7.5×5.3	15	40	4.8	8.6	43	43	161	0.14	2.05	**17**
11	37	22			50	7	12	72	72	253	0.23	2.84	**21**
15	42	24		20	60	13	22	172	172	496	0.46	4.43	**27**
19	69	40	7×11×9		80	31	49	579	579	1,855	1.35	9.32	**35**

1kN≒102kgf 1N・m≒0.102kgf・m

part number	standard rail length L mm																	maximum length mm
SGW17	110	150	190	230	270	310	350	390	430	510	590	670	750	830	950	1,070	1,190	1,310	2,000
SGW21	130	180	230	280	330	380	430	480	530	630	730	830	930	1,030	1,180	1,330	1,480		2,000
SGW27	160	220	280	340	400	460	520	640	760	880	1,000	1,180	1,360	1,540	1,720	1,900			3,000
SGW35	280	360	440	520	600	680	760	920	1,080	1,240	1,400	1,640	1,880	2,120					3,000

Rails exceeding the maximum specified length may be fabricated if joints are used. Please contact NB for assistance.

www.bergab.ru Берг АБ bergab@ya.ru Тел. (495)-228-06-21, факс (495) 223-3071

www.bergab.ru Берг АБ bergab@ya.ru Тел. (495)-228-06-21, факс (495) 223-3071

BALL SPLINE

ROTARY BALL SPLINE

STROKE BALL SPLINE

www.bergab.ru Берг АБ bergab@ya.ru Тел. (495)-228-06-21, факс (495) 223-3071

www.bergab.ru Берг АБ bergab@ya.ru Тел. (495)-228-06-21, факс (495) 223-3071

BALL SPLINE

The NB ball spline is a linear motion mechanism utilizing the rotational motion of ball elements that can sustain loads and at the same time can transfer torque. It can be used in a wide variety of applications including robotics and transport type equipment.

STRUCTURE AND ADVANTAGES

The NB ball spline consists of a spline shaft with raceway grooves and a spline nut. The spline nut consists of an outer cylinder (main body), retainer, side rings, and ball elements that is designed and manufactured to achieve a reliably smooth motion.

High Load Capacity and Long Travel Life

The raceway grooves are machined to a radius close to that of the ball elements. The large ball contact area results in high load capacity and long travel life.

Wide Variety of Configurations

Spline shaft sizes with diameters from 4mm to 100mm are available. Several types of spline nut are available: cylindrical types (SSP/SSPM), flange types (SSPF/SSPT), and block type (SSPB). Material option of Stainless steel (SUS440C or equivalent) is also available. They can be specified to suit various applications.

High Accuracy Torque Transmission

Due to the effective contact angle between the raceway grooves and the balls, the NB ball spline can transfer large torque. By adjusting preload it is possible to give a higher rigidity and a higher positioning accuracy.

Ease of Additional Custom Machining

Since a round shaft with raceway grooves is used, NB ball spline shafts can be machined easily to customized specifications.

High-Speed Motion and High-Speed Rotation

The outer cylinder is compact and well balanced, resulting in good performance at high speed.

Figure B-1 Basic Structure of NB Ball Spline

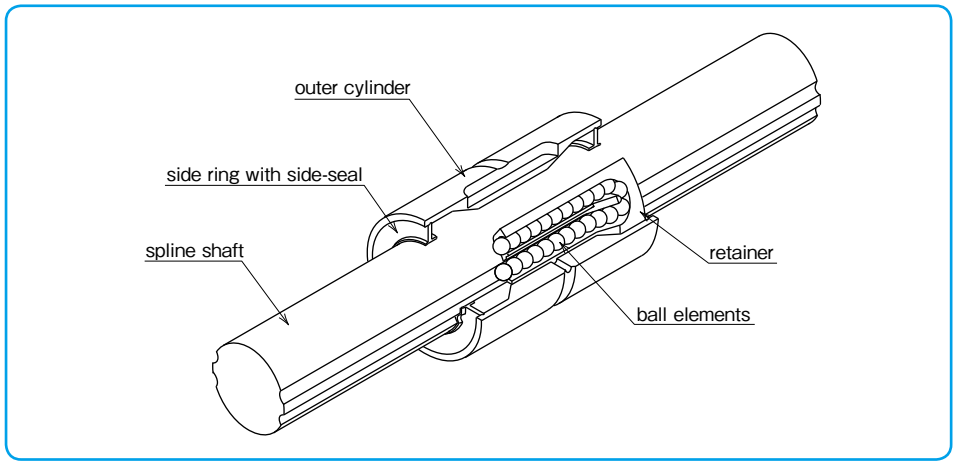

TYPES

TYPES OF SPLINE NUT

A wide variety of spline nut designs are available and all spline nuts come with side-seals as a standard feature.

Table B-1 Types of Spline Nut

type of nut		shape and advantage	page
cylindrical type	SSP SSPS	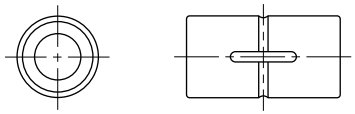 ・cylindrical spline nut with key groove ・with special key ・nominal diameter: SSP4-100 : SSPS4-25	P.B-14
	SSPM	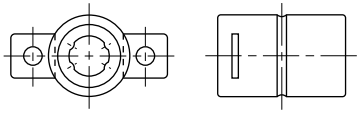 ・cylindrical spline nut without key groove ・with two lock plates for fixing ・nominal diameter: 6-10	P.B-16
flange type	SSPF SSPFS	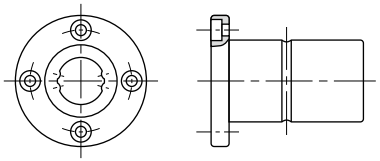 ・spline nut with flange ・nominal diameter: SSPF6-60 : SSPFS6-25	P.B-18
	SSPT	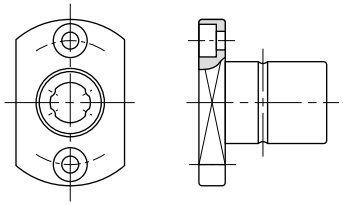 ・spline nut with a two side cut flange ・nominal diameter: 6-10	P.B-20
block type	SSPB	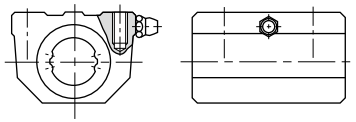 ・cast block ・spline grooves are machined directly on main body ・high rigidity ・with grease fitting ・nominal diameter: 20-40	P.B-22

www.bergab.ru Берг АБ bergab@ya.ru Тел. (495)-228-06-21, факс (495) 223-3071

www.bergab.ru Берг АБ bergab@ya.ru Тел. (495)-228-06-21, факс (495) 223-3071

TYPES OF SPLINE SHAFT

Depending on the application requirements, either a ground spline shaft or a non-ground (commercial grade) spline shaft is available.

Table B-2

type of spline shaft	shape and advantage	
ground spline shaft		・precision ground and precision machined surface finish ・high precision ・possible to machine ends of spline shaft and surface treatment ・nominal diameter: 4-100
standard spline shaft		・standard dimension and shape ・accuracy grade: high grade ・short lead time ・nominal diameter: 4-60 (refer to page B-24)
commercial shaft (non-ground)	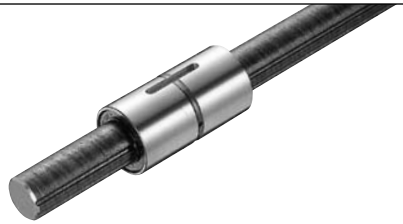	・for general industrial use ・cost effective ・possible to machine ends of spline shaft and surface treatment ・nominal diameter: 20-50 ・maximum length: 5000mm (refer to page B-25)

ACCURACY

The NB ball spline is measured for accuracy at the points shown in Figure B-2 and categorized as either high-grade (blank) or precision-grade (P).
Contact NB for accuracy information on the commercial type ball spline.

Table B-3
Tolerance of Spline Shaft and Groove Torsion

type of shaft	ground shaft	
accuracy grade	high	precision (P)
tolerance	13μm/100mm	6μm/100mm

Figure B-2 Accuracy Measurement Points

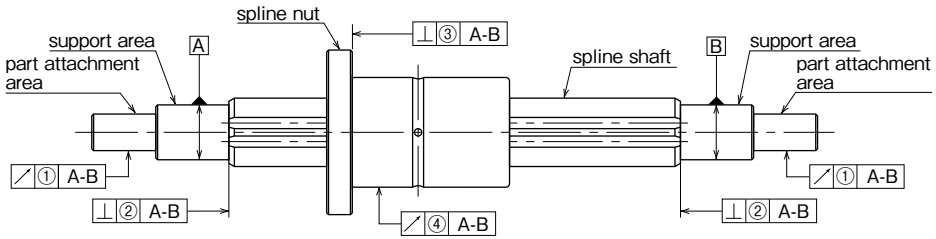

Note: The support area is the portion where, for example, radial bearings are attached in order to support the spline shaft.
The part attachment area is the portion to which other parts, such as gears are attached.

Table B-4 Tolerance Relative to Spline Support Area (Max.) unit/μm

part number	radial runout of part attachment area ①		perpendicularity of the end of the spline shaft section ②		perpendicularity of the flange ③	
	high-grade	precision-grade	high-grade	precision-grade	high-grade	precision-grade
SSP 4	14	8	9	6	—	—
SSP 6					11	8
SSP 8						
SSP 10	17	10			13	9
SSP 13A	19	12	11	8		
SSP 16A						
SSP 20A						
SSP 25A	22	13	13	9	16	11
SSP 30A						
SSP 40A	25	15	16	11	19	13
SSP 50A						
SSP 60A	29	17	19	13	22	15
SSP 80					—	—
SSP 80L						
SSP100	34	20	22	15		
SSP100L						
SSP 20	19	12	11	8	13	9
SSP 25	22	13	13	9	16	11
SSP 30						
SSP 40	25	15	16	11	19	13
SSP 50						
SSP 60	29	17	19	13	22	15

www.bergab.ru Берг АБ bergab@ya.ru Тел. (495)-228-06-21, факс (495) 223-3071

www.bergab.ru Берг АБ bergab@ya.ru Тел. (495)-228-06-21, факс (495) 223-3071

Table B-5 ④Radial Runout of Outer Surface of Spline Nut Relative to Spline Shaft Support Area (Max.) unit/μm

total length of spline shaft (mm)		part number													
		SSP4 SSP6 SSP8		SSP10		SSP13A SSP16A		SSP20A・20 SSP25A・25 SSP30A・30		SSP40A・40 SSP50A・50		SSP60A・60 SSP80 SSP80L		SSP100 SSP100L	
greater than	or less	high-grade	precision grade	high-grade	precision grade	high-grade	precision grade	high-grade	precision grade	high-grade	precision grade	high-grade	precision grade	high-grade	precision grade
—	200	46	26	36	20	34	18	32	18	32	16	30	16	30	16
200	315	89	57	54	32	45	25	39	21	36	19	34	17	32	17
315	400	126*	82*	68	41	53	31	44	25	39	21	36	19	34	17
400	500	163*	108*	82	51	62	38	50	29	43	24	38	21	35	19
500	630	—	—	102	65	75	46	57	34	47	27	41	23	37	20
630	800	—	—	—	—	92	58	68	42	54	32	45	26	40	22
800	1,000	—	—	—	—	115	75	83	52	63	38	51	30	43	24
1,000	1,250	—	—	—	—	153	97	102	65	76	47	59	35	48	28
1,250	1,600	—	—	—	—	195*	127*	130	85	93	59	70	43	55	33
1,600	2,000	—	—	—	—	—	—	171	116	118	77	86	54	65	40

★ SSP4 maximum length: 300mm; SSP6 maximum length: 400mm; SSP13A, 16A maximum length: 1500mm
★★ Please contact NB for shaft lengths exceeding 2000mm.

PRELOAD AND CLEARANCE IN ROTATIONAL DIRECTION

Both the clearance and preload are expressed in terms of clearance in the rotational direction. The preload is categorized into three different levels: standard, light (T1), and medium (T2). A preload cannot be specified with the commercial grade spline shaft.

Table B-6 Preload and Clearance in Rotational Direction unit/μm

part number	standard	light (T1)	medium (T2)
SSP 4	−2～+1	− 6～−2	–
SSP 6			
SSP 8			
SSP 10	−3～+1	− 8～−3	−13～− 8
SSP 13A			
SSP 16A			
SSP 20A	−4～+2	−12～−4	−20～−12
SSP 25A			
SSP 30A			
SSP 40A	−6～+3	−18～−6	−30～−18
SSP 50A			
SSP 60A			
SSP 80			
SSP 80L			
SSP100	−8～+4	−24～−8	−40～−24
SSP100L			
SSP 20	−4～+2	−12～−4	−20～−12
SSP 25			
SSP 30			
SSP 40	−6～+3	−18～−6	−30～−18
SSP 50			
SSP 60			

Table B-7 Operating Condition and PreLoad

preload	preload symbol	operating conditions
standard	blank	minute vibration is applied. a precise motion is required. a torque in a given direction is applied.
light	T1	slight vibration is applied. slight torsional load is applied. cyclic torque is applied.
medium	T2	shock/vibration is applied. over-hang load is applied. torsional load is applied.

RATED LIFE

When the ball elements are used as the rolling elements in ball splines, the following equations are used to calculate the life of ball spline.

For radial load

$$L=\left(\frac{f_C}{f_W}\cdot\frac{C}{P}\right)^3\cdot 50$$

For torque load

$$L=\left(\frac{f_C}{f_W}\cdot\frac{C_T}{T}\right)^3\cdot 50$$

L: rated life (km) f_C: contact coefficient f_W: load coefficient
C: basic dynamic load rating (N) P: applied load (N)
C_T: basic dynamic torque rating (N·m) T: applied torque (N·m)
* Refer to page Eng-5 for the coefficients
** The load rating of the commercial spline is approximately 70% of the standard ball spline.

$$L_h=\frac{L\cdot 10^3}{2\cdot \ell_s\cdot n_1\cdot 60}$$

L_h: life time (hr) ℓ_s: stroke length (m)
L: rated life (km) n_1: number of cycles per minute (cpm)

Figure B-3 Radial Load and Torque Load

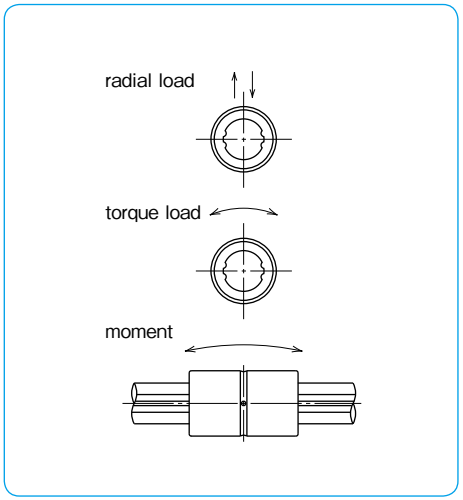

OPERATING CONDITIONS

The performance of the ball spline is affected by the operating conditions of the application. The operating conditions should therefore be carefully taken into consideration.

Dust Prevention

Foreign particles or dust in the ball spline nut affects the motion accuracy and shortens the life time. Standard seals will perform well for dust prevention under normal operating conditions, however, in a harsh environment it is necessary to attach bellows or protective covers.
(refer to Figure B-4)

Operating Temperature

The retainer is made of resin, so the operating temperature should never exceed 80℃.

Excessive Moment

One spline nut can sustain high moment, however, excessive moment makes the spline nut unbalanced and unstable in motion. Please use more than one spline nut for high moment or high accuracy applications.

Figure B-4 Example of Dust Prevention

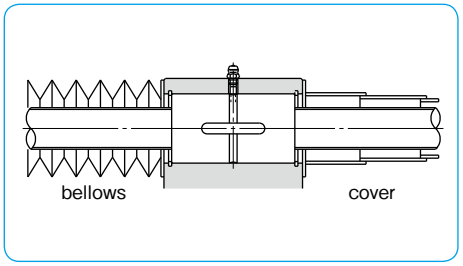

www.bergab.ru Берг АБ bergab@ya.ru Тел. (495)-228-06-21, факс (495) 223-3071

www.bergab.ru Берг АБ bergab@ya.ru Тел. (495)-228-06-21, факс (495) 223-3071

LUBRICATION

The spline nut is prelubricated with lithium soap based grease prior to shipment for immediate use. Please relubricate with a similar type of grease periodically depending on the operating conditions.
Low dust generation grease is available from NB standard grease. (refer to page Eng-39)
The NB spline nut has seals as standard. The seals work well to contain the grease inside the nut especially for the ground shaft, since the seal shape approximates the spline shaft profile.

Figure B-5 Example of Lubrication Mechanism

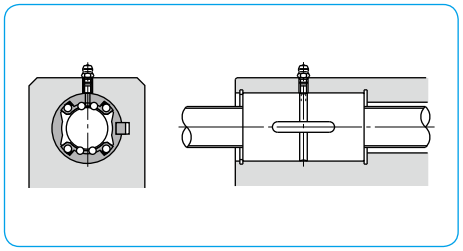

SPECIAL REQUIREMENTS

Based on customer drawings and requirements NB does shaft-end machining, spline nut machining, surface treatment, etc. Please contact NB for special requirements. Table B-8 shows a list of recommended inner diameters for hollow spline shaft.

Figure B-6 Example of Shaft-end Machining

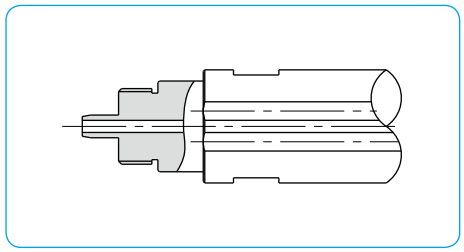

Table B-8
Recommended Inner Diameter for Hollow Spline Shaft

part number	shaft diameter Ds mm	inner diameter d mm	cross-sectional coefficient Z mm^3	second moment of inertia I mm^4
SSP 4	4	1.5	5.7	11
SSP 6	6	2	19.4	58
SSP 8	8	3	46.5	186
SSP10	10	4	89.6	448
SSP13A	13	6	193	1,260
SSP16A	16	8	348	2,780
SSP20A	20	10	686	6,860
SSP25A	25	15	1,230	15,400

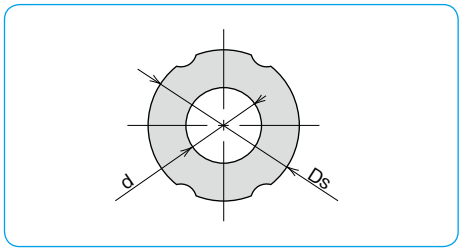

MOUNTING

Fit

A transition fit is used for the SSP/SSPM-type spline nut and its housing bore to minimize the clearance. If high accuracy is not required, then a clearance fit can be used.
In case of the SSPT/SSPF type spline nut, for a light load and little torque application, a hole slightly larger than the outer diameter of the nut can suffice.

Insertion of Spline Nut

When inserting a spline nut into the housing, use a jig like the one shown in Figure B-7. Carefully insert the nut so as not to hit the side ring and seal.

Table B-10 Recommended Jig Dimensions unit／mm

part number	D	d	part number	D	d
SSP 4	9.5	3.5	SSP 20	31.5	16.5
SSP 6	13.5	5	SSP 25	36.5	20.5
SSP 8	15.5	7	SSP 30	44.5	25
SSP 10	20.5	8.5	SSP 40	59.5	33
SSP 13A	23.5	12	SSP 50	74	41
SSP 16A	30.5	14.5	SSP 60	89	50
SSP 20A	34.5	18			
SSP 25A	41.5	22.5			
SSP 30A	46.5	27			
SSP 40A	63.5	35.6			
SSP 50A	79	44			
SSP 60A	89	53.5			
SSP 80	119	74			
SSP 80L					
SSP100	149	92			
SSP100L					

Insertion of Spline Shaft

When inserting the spline shaft into the spline nut, ensure that the ball elements do not drop out. This is done by aligning the raceway grooves of the shaft with the rows of ball elements and the seal-lip of the nut. Then carefully insert the spline shaft through the spline nut.

Table B-9 Fit for the Spline Nut

type of spline nut	clearance fit	transition fit
SSP	H7	J6
SSPM		

Figure B-7 Insertion of Spline Nut into Housing

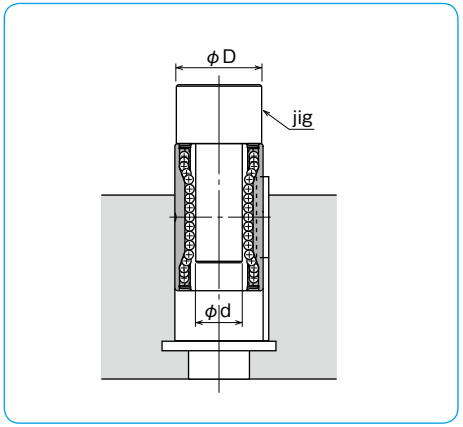

www.bergab.ru Берг АБ bergab@ya.ru Тел. (495)-228-06-21, факс (495) 223-3071

www.bergab.ru Берг АБ bergab@ya.ru Тел. (495)-228-06-21, факс (495) 223-3071

Mounting of SSP Type

Examples of installing the SSP type are shown in Figures B-8 and B-9.

Figure B-8 Using a Retaining Ring

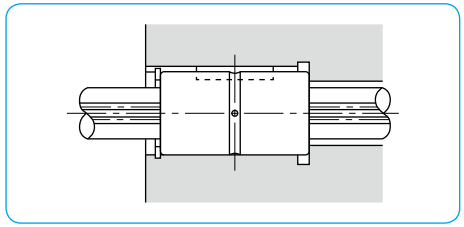

Figure B-9 Using a Push Plate

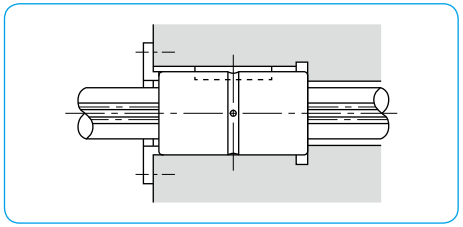

Key

The SSP type spline nut comes with a key shown in Figure B-10.

Figure B-10 Key for SSP Type

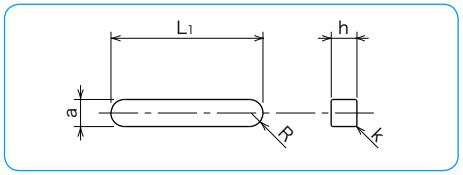

Table B-11 Major Dimensions of Key

part number	a mm	a tolerance μm	h mm	h tolerance μm	L_1 mm	R mm	k mm
SSP 4	2	+16 / +6	2	0 / −25	6	1	0.2
SSP 6	2.5		2.5		10.5	1.25	
SSP 8	2.5		2.5		10.5	1.25	
SSP 10	3		3		13	1.5	
SSP 13A	3		3		15	1.5	
SSP 16A	3.5	+24 / +12	3.5	0 / −30	17.5	1.75	
SSP 20A	4		4		29	2	0.5
SSP 25A	4		4		36	2	0.3
SSP 30A	4		4		42	2	0.5
SSP 40A	6		6		52	3	0.5
SSP 50A	8	+30/+15	7	0 / −36	58	4	0.5
SSP 60A	12	+36 / +18	8		67	6	0.8
SSP 80	16		10		76	8	0.5
SSP 80L					110		
SSP100	20	+43 / +22	13	0 / −43	110	10	0.8
SSP100L					160		
SSP 20	4	+24 / +12	4	0 / −30	26	2	0.2
SSP 25	5		5		33	2.5	0.3
SSP 30	7	+30 / +15	7	0 / −36	41	3.5	0.3
SSP 40	10		8		55	5	0.5
SSP 50	15	+36 / +18	10		60	7.5	0.5
SSP 60	18		11	0/−43	68	9	0.5

Mounting of SSPM Type

Examples of installing the SSPM type are shown in Figures B-11 to B-14.

Figure B-11 Using F Type Lock Plates

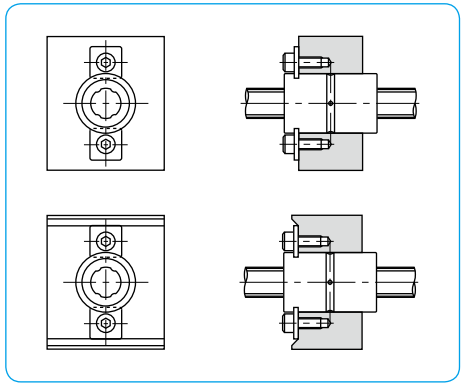

Figure B-12 Using LP Type Lock Plates

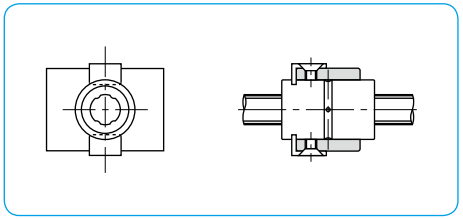

Figure B-13 Using Special Lock Plates (1)

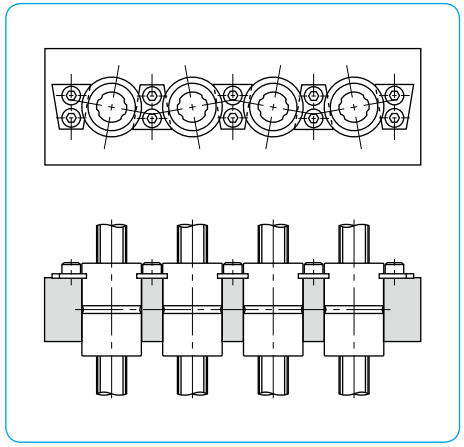

Figure B-14 Using Special Lock Plates (2)

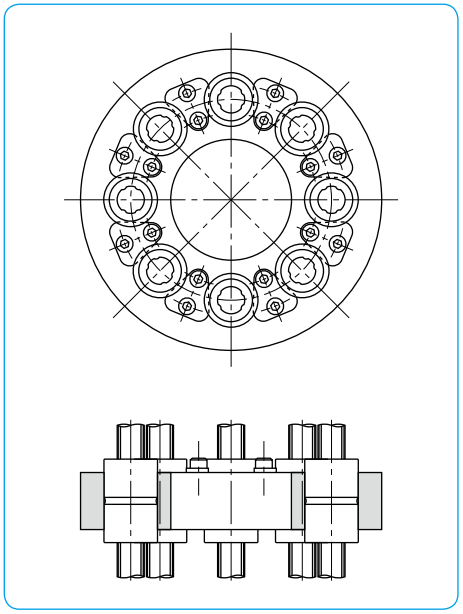

www.bergab.ru Берг АБ bergab@ya.ru Тел. (495)-228-06-21, факс (495) 223-3071

www.bergab.ru Берг АБ bergab@ya.ru Тел. (495)-228-06-21, факс (495) 223-3071

F Type Lock Plate (Standard Plate)

The lock plate shown in Figure B-15 is provided with the SSPM spline nut.

Material: SUS304CSP

Table B-12 F Type Lock Plate

part number	K mm	G mm	t mm	R mm	applicable spline nut
FP 6	6.8	2.9	1.0	0.5	SSPM 6
FP 8	8.5	3.5	1.2	0.5	SSPM 8
FP10	8.5	3.5	1.2	0.5	SSPM10

Figure B-15 F Type Lock Plate

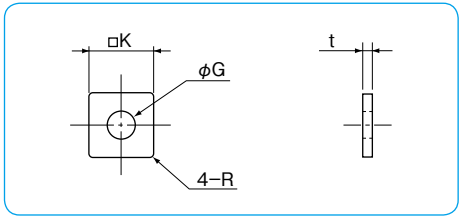

LP Type Lock Plate (Optional Plate)

The LP type lock plate is also available for purchase with the SSPM spline nut.

Material: SUS304CSP

Figure B-16 LP Type Lock Plate

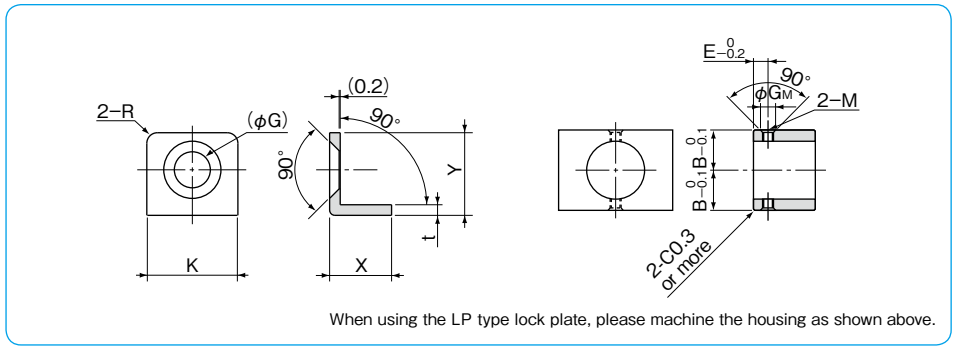

When using the LP type lock plate, please machine the housing as shown above.

Table B-13 LP Type Lock Plate

part number	lock plate major dimensions						machined housing dimensions				applicable spline nut
	K mm	G mm	t mm	R mm	X mm	Y mm	B mm	E mm	GM mm	M	
LP 6	8.6	3.8	1.0	1	5.85	7.8	11.1	3.3	3.5	M2.5	SSPM 6
LP 8	9.15	4.5	1.2	1	6.45	9.2	12.3	4.0	4.2	M3	SSPM 8
LP10	9.15	4.5	1.2	1	6.45	9.2	14.8	4.0	4.2	M3	SSPM10

Mounting of SSPF Type

Examples of installing the SSPF type are shown in Figure B-17.

Figure B-17 Examples of installing SSPF Type

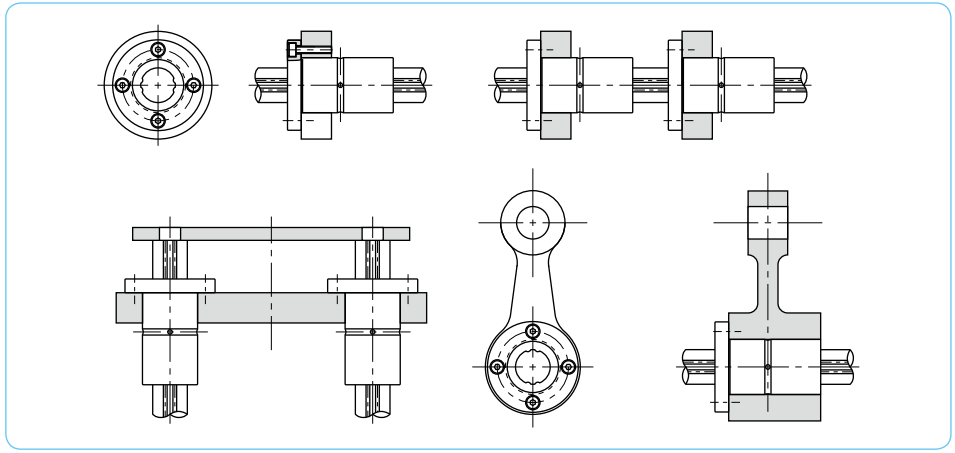

Mounting of SSPT Type

Examples of installing SSPT type are shown in Figure B-18.

Figure B-18 Examples of installing SSPT Type

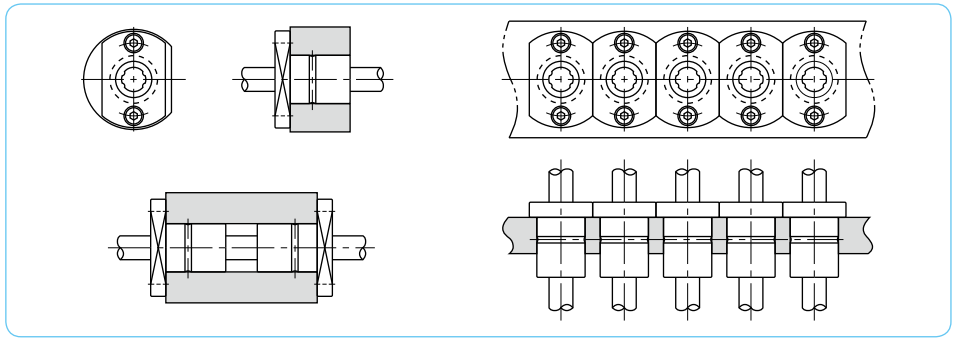

Mounting of SSPB Type

Example of installing SSPB type is shown in Figure B-19.

Figure B-19 Example of installing SSPB Type

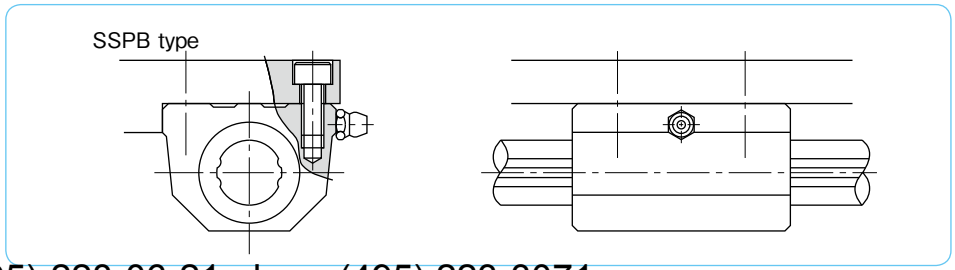

www.bergab.ru Берг АБ bergab@ya.ru Тел. (495)-228-06-21, факс (495) 223-3071

www.bergab.ru Берг АБ bergab@ya.ru Тел. (495)-228-06-21, факс (495) 223-3071

SSP TYPE

– Cylindrical Spline Nut –

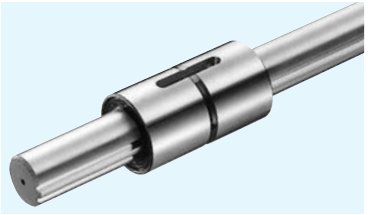

part number structure

example **SSP 80 L-2-T1-600-P/CU**

- specification
  SSP: standard
  SSPS: anti-corrosion
- nominal diameter
- nut length
  blank: standard
  L: long
- number of nuts attached to one shaft
- preload symbol
  blank: standard
  T1: light
  T2: medium
- spline shaft total length
- accuracy grade
  blank: high
  P: precision
- with special specification

Note: retainer material is resin.

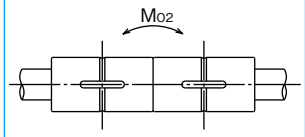

When two spline nuts are used in close contact.

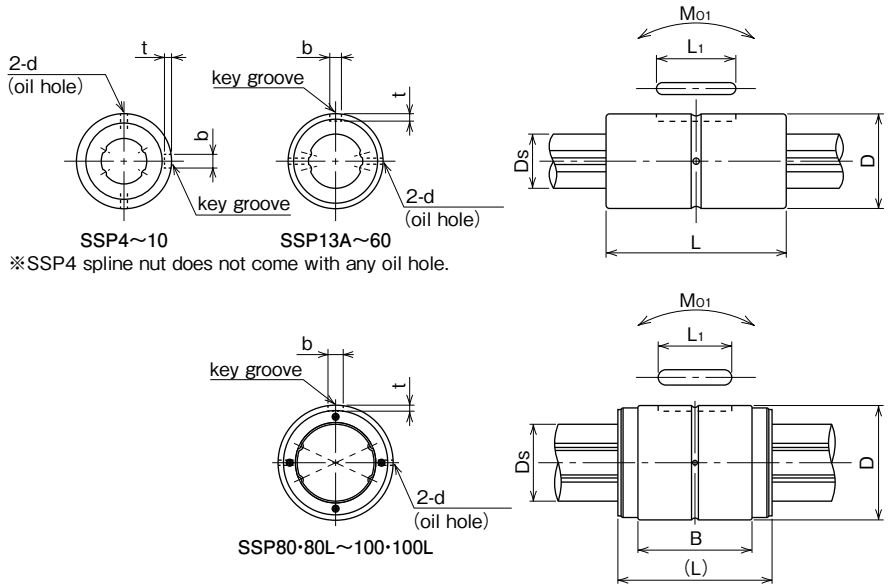

part number standard	part number anti-corrosion	D mm	D tolerance μm	L mm	L tolerance mm	B mm	b mm	b tolerance μm	t +0.05 0 mm	L1 mm	d mm	Ds mm	Ds tolerance μm
SSP 4	SSPS 4	10	0/−9	16	0 −0.2	–	2	+14 0	1.2	6	–	4	0 −12
SSP 6	SSPS 6	14	0 −11	25			2.5		1.2	10.5	1	6	
SSP 8	SSPS 8	16		25			2.5		1.2	10.5	1.5	8	0 −15
SSP 10	SSPS10	21	0 −13	33			3		1.5	13	1.5	10	
SSP 13A	SSPS13A	24		36			3		1.5	15	1.5	13	0 −18
SSP 16A	SSPS16A	31	0 −16	50			3.5	+18 0	2	17.5	2	16	
SSP 20A	SSPS20A	35		63			4		2.5	29	2	20	0 −21
SSP 25A	SSPS25A	42		71	0 −0.3		4		2.5	36	3	25	
SSP 30A	—	47		80			4		2.5	42	3	30	
SSP 40A	—	64	0 −19	100			6		3.5	52	4	40	0 −25
SSP 50A	—	80		125			8	+22/0	4	58	4	50	
SSP 60A	—	90	0 −22	140			12	+27 0	5	67	4	60	0 −30
SSP 80	—	120		160	–	118.2	16		6	76	5	80	
SSP 80L	—	120		217		175.2				110			
SSP100	—	150	0 −25	185		132.6	20	+33 0	7	110	5	100	0 −35
SSP100L	—	150		248		195.6				160			
SSP 20	SSPS20	32	0 −16	60	0/−0.2	–	4	+18 0	2.5	26	2	18.2	0 −21
SSP 25	SSPS25	37		70	0 −0.3		5		3	33	3	23	
SSP 30	—	45		80			7	+22 0	4	41	3	28	
SSP 40	—	60	0 −19	100			10		4.5	55	4	37.4	0 −25
SSP 50	—	75		112			15	+27 0	5	60	4	47	
SSP 60	—	90	0/−22	127			18		6	68	4	56.5	0/−30

basic torque rating dynamic C_T N·m	basic torque rating static C_{0T} N·m	basic load rating dynamic C kN	basic load rating static Co kN	allowable static moment M_{01} N·m	allowable static moment M_{02} N·m	second cross-sectional moment of inertia mm^4	cross-sectional coefficient mm^3	mass nut kg	mass shaft kg/m	size
0.74	1.05	0.86	1.22	1.97	10.3	1.18×10	5.90	0.0065	0.10	4
1.5	2.4	1.22	2.28	5.1	40	5.9×10	1.97×10	0.019	0.21	6
2.1	3.7	1.45	2.87	7.4	50	1.9×10^2	4.76×10	0.023	0.38	8
4.4	8.2	2.73	5.07	18.0	116	4.61×10^2	9.22×10	0.054	0.60	10
21	39.2	2.67	4.89	13.7	109	1.38×10^3	2.13×10^2	0.07	1.0	13A
60	110	6.12	11.2	46	299	2.98×10^3	3.73×10^2	0.15	1.5	16A
105	194	8.9	16.3	110	560	7.35×10^3	7.34×10^2	0.22	2.4	20A
189	346	12.8	23.4	171	1,029	1.79×10^4	1.43×10^3	0.33	3.7	25A
307	439	18.6	23.2	181	1,470	3.66×10^4	2.44×10^3	0.36	5.38	30A
674	934	30.8	37.5	358	2,940	1.15×10^5	5.75×10^3	0.95	9.55	40A
1,291	2,955	40.3	64.9	690	4,084	2.83×10^5	1.13×10^4	1.9	15.0	50A
1,577	2,629	47.7	79.5	881	5,473	5.91×10^5	1.97×10^4	2.3	21.6	60A
3,860	6,230	83.1	134	2,000	11,100	1.93×10^6	4.83×10^4	5.1	39	80
5,120	9,340	110	201	4,410	21,100			7.6		80L
6,750	11,570	135	199	3,360	19,300	4.69×10^6	9.38×10^4	9.7	61	100
8,960	17,300	179	298	7,340	37,700			13.9		100L
83	133	7.84	11.3	63	500	5.05×10^3	5.54×10^2	0.2	2.0	20
162	239	12.3	16.1	104	830	1.27×10^4	1.11×10^3	0.22	3.1	25
289	412	18.6	23.2	181	1,470	2.75×10^4	1.96×10^3	0.35	4.8	30
637	882	30.8	37.5	358	2,940	8.73×10^4	4.67×10^3	0.81	8.6	40
1,390	3,180	46.1	74.2	696	4,400	2.16×10^5	9.21×10^3	1.5	13.1	50
2,100	4,800	58.0	127	1,300	8,800	4.51×10^5	1.60×10^4	2.5	19	60

1kN≒102kgf 1N·m≒0.102kgf·m

www.bergab.ru Берг АБ bergab@ya.ru Тел. (495)-228-06-21, факс (495) 223-3071

www.bergab.ru Берг АБ bergab@ya.ru Тел. (495)-228-06-21, факс (495) 223-3071

SSPM TYPE

– Keyless Spline Nut –

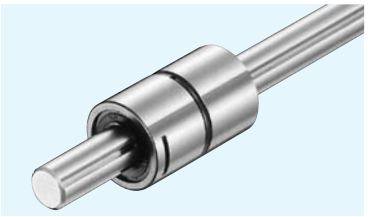

part number structure

example **SSPM 10-2-T1-200-P/CU**

- SSPM type
- nominal diameter
- number of nuts attached to one shaft
- preload symbol
  blank: standard
  T1: light
- spline shaft total length
- accuracy grade
  blank: high
  P: precision
- with special specification

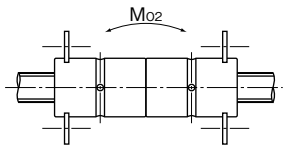

When two spline nuts are used in close contact.

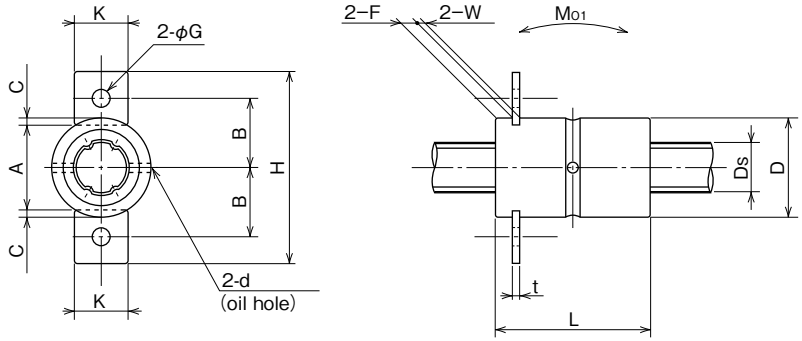

part number	D mm	D tolerance μm	L mm	L tolerance mm	F mm	W mm	C mm	A mm	d mm	B mm	H mm	K mm	G mm
	major dimensions												
SSPM 6	14	0	25	0	2.2	1.1	1.0	12.0	1	9.4	25.6	6.8	2.9
SSPM 8	16	−11	25	−0.2	2.7	1.3	1.2	13.6	1.5	11	30.6	8.5	3.5
SSPM10	21	0/−13	33		2.7	1.3	1.2	18.6	1.5	13.5	35.6	8.5	3.5

t mm	Ds mm	Ds tolerance μm	basic torque rating dynamic C_T N・m	basic torque rating static C_{0T} N・m	basic load rating dynamic C kN	basic load rating static Co kN	allowable static moment M_{01} N・m	allowable static moment M_{02} N・m	second cross-sectional moment of inertia mm^4	cross-sectional coefficient mm^3	mass nut kg	mass shaft kg/m	size
1.0	6	0/−12	1.5	2.4	1.22	2.28	5.1	40	5.9×10	1.97×10	0.019	0.21	**6**
1.2	8	0	2.1	3.7	1.45	2.87	7.4	50	1.9×10^2	4.76×10	0.023	0.38	**8**
1.2	10	−15	4.4	8.2	2.73	5.07	18.0	116	4.61×10^2	9.22×10	0.054	0.60	**10**

1kN≒102kgf 1N・m≒0.102kgf・m

www.bergab.ru Берг АБ bergab@ya.ru Тел. (495)-228-06-21, факс (495) 223-3071

www.bergab.ru Берг АБ bergab@ya.ru Тел. (495)-228-06-21, факс (495) 223-3071

SSPF TYPE

– Flange Type Nut –

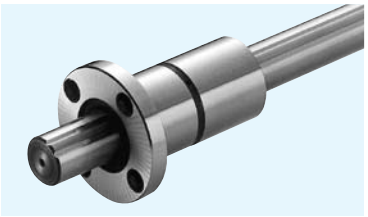

part number structure

example **SSPF 25-2-T1-436-P/CU**

- specification
  SSPF: standard
  SSPFS: anti-corrosion
- nominal diameter
- number of nuts attached to one shaft
- preload symbol
  blank: standard
  T1: light
  T2: medium
- spline shaft total length
- accuracy grade
  blank: high
  P: precision
- with special specification

Note: retainer material is resin.

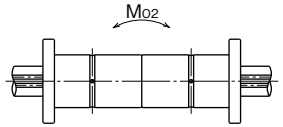

When two spline nuts are used in close contact.

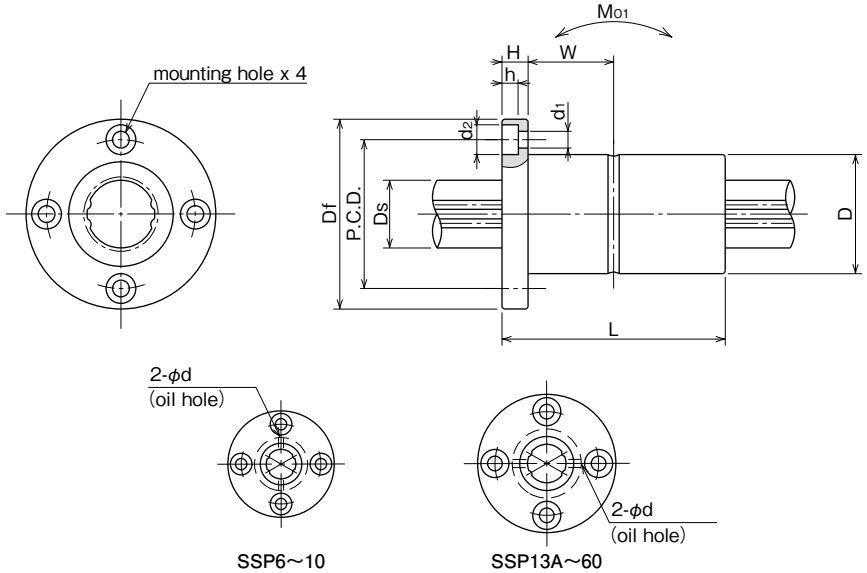

part number standard	part number anti-corrosion	D mm	D tolerance μm	L mm	L tolerance mm	Df mm	H mm	P.C.D. mm	d1×d2×h mm	W mm	d mm
SSPF 6	SSPFS 6	14	0	25		30	5	22	3.4×6.5×3.3	7.5	1
SSPF 8	SSPFS 8	16	−11	25		32	5	24	3.4×6.5×3.3	7.5	1.5
SSPF10	SSPFS10	21	0	33	0	42	6	32	4.5×8×4.4	10.5	1.5
SSPF13A	SSPFS13A	24	−13	36	−0.2	43	7	33	4.5×8×4.4	11	1.5
SSPF16A	SSPFS16A	31		50		50	7	40	4.5×8×4.4	18	2
SSPF20A	SSPFS20A	35	0	63		58	9	45	5.5×9.5×5.4	22.5	2
SSPF25A	SSPFS25A	42	−16	71		65	9	52	5.5×9.5×5.4	26.5	3
SSPF30A	—	47		80	0	75	10	60	6.6×11×6.5	30	3
SSPF40A	—	64	0	100	−0.3	100	14	82	9×14×8.6	36	4
SSPF50A	—	80	−19	125		124	16	102	11×17.5×11	46.5	4
SSPF60A	—	90	0/−22	140		129	18	107	11×17.5×11	52	4
SSPF20	SSPFS20	32		60	0/−0.2	51	7	40	4.5×8×4.4	23	2
SSPF25	SSPFS25	37	0	70		60	9	47	5.5×9.5×5.4	26	3
SSPF30	—	45	−16	80	0	70	10	54	6.6×11×6.5	30	3
SSPF40	—	60	0	100	−0.3	90	14	72	9×14×8.6	36	4
SSPF50	—	75	−19	112		113	16	91	11×17.5×11	40	4
SSPF60	—	90	0/−22	127		129	18	107	11×17.5×11	45.5	4

Ds mm	Ds tolerance μm	basic torque rating dynamic C_T N·m	basic torque rating static C_{0T} N·m	basic load rating dynamic C kN	basic load rating static Co kN	allowable static moment M_{01} N·m	allowable static moment M_{02} N·m	second cross-sectional moment of inertia mm^4	cross-sectional coefficient mm^3	mass nut kg	mass shaft kg/m	size
6	0/−12	1.5	2.4	1.22	2.28	5.1	40	5.9×10	1.97×10	0.037	0.21	6
8	0	2.1	3.7	1.45	2.87	7.4	50	1.9×10^2	4.76×10	0.042	0.38	8
10	−15	4.4	8.2	2.73	5.07	18.0	116	4.61×10^2	9.22×10	0.094	0.6	10
13	0	21	39.2	2.67	4.89	13.7	109	1.38×10^3	2.13×10^2	0.1	1	13A
16	−18	60	110	6.12	11.2	46	299	2.98×10^3	3.73×10^2	0.2	1.5	16A
20	0	105	194	8.9	16.3	110	560	7.35×10^3	7.34×10^2	0.33	2.4	20A
25	−21	189	346	12.8	23.4	171	1,029	1.79×10^4	1.43×10^3	0.45	3.7	25A
30		307	439	18.6	23.2	181	1,470	3.66×10^4	2.44×10^3	0.55	5.38	30A
40	0	647	934	30.8	37.5	358	2,940	1.15×10^5	5.75×10^3	1.41	9.55	40A
50	−25	1,291	2,955	40.3	64.9	690	4,084	2.83×10^5	1.13×10^4	2.73	15.0	50A
60	0/−30	1,577	2,629	47.7	79.5	881	5,473	5.91×10^5	1.97×10^4	3.2	21.6	60A
18.2	0	83	133	7.84	11.3	63	500	5.05×10^3	5.54×10^2	0.22	2	20
23	−21	162	239	12.3	16.1	104	830	1.27×10^4	1.11×10^3	0.32	3.1	25
28		289	412	18.6	23.2	181	1,470	2.75×10^4	1.96×10^3	0.51	4.8	30
37.4	0	637	882	30.8	37.5	358	2,940	8.73×10^4	4.67×10^3	1.15	8.6	40
47	−25	1,390	3,180	46.1	74.2	696	4,400	2.16×10^5	9.21×10^3	2.1	13.1	50
56.5	0/−30	2,100	4,800	58.0	127	1,300	8,800	4.51×10^5	1.60×10^4	3.3	19	60

1kN≒102kgf 1N·m≒0.102kgf·m

www.bergab.ru Берг АБ bergab@ya.ru Тел. (495)-228-06-21, факс (495) 223-3071

www.bergab.ru Берг АБ bergab@ya.ru Тел. (495)-228-06-21, факс (495) 223-3071

SSPT TYPE

— Two Side Cut Flange Type —

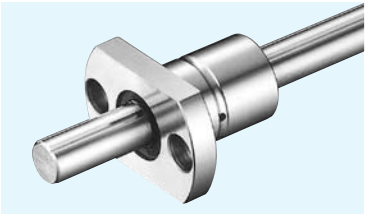

part number structure

example **SSPT 10-2-T1-436-P/CU**

- SSPT type
- nominal diameter
- number of nuts attached to one shaft
- preload symbol **blank**: standard **T1**: light
- spline shaft total length
- accuracy grade **blank**: high **P**: precision
- with special specification

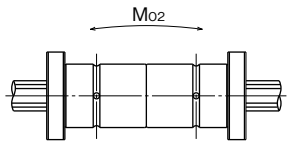

When two spline nuts are used in close contact.

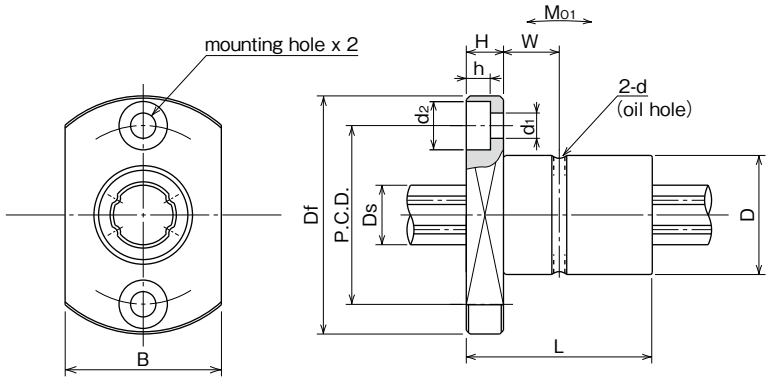

part number	major dimensions D mm	D tolerance μm	L mm	L tolerance mm	Df mm	B mm	H mm	P.C.D. mm	d1×d2×h mm	W mm	d mm
SSPT 6	14	0	25	0	30	18	5	22	3.4×6.5×3.3	7.5	1
SSPT 8	16	−11	25	−0.2	32	21	5	24	3.4×6.5×3.3	7.5	1.5
SSPT10	21	0/−13	33		42	25	6	32	4.5×8×4.4	10.5	1.5

Ds mm	Ds tolerance μm	basic torque rating dynamic CT N・m	basic torque rating static COT N・m	basic load rating dynamic C kN	basic load rating static Co kN	allowable static moment Mo1 N・m	allowable static moment Mo2 N・m	second cross-sectional moment of inertia mm4	cross-sectional coefficient mm3	mass nut kg	mass shaft kg/m	size
6	0/−12	1.5	2.4	1.22	2.28	5.1	40	5.9 ×10	1.97×10	0.029	0.21	**6**
8	0	2.1	3.7	1.45	2.87	7.4	50	1.9 ×10²	4.76×10	0.035	0.38	**8**
10	−15	4.4	8.2	2.73	5.07	18.0	116	4.61×10²	9.22×10	0.075	0.6	**10**

1kN≒102kgf 1N・m≒0.102kgf・m

www.bergab.ru Берг АБ bergab@ya.ru Тел. (495)-228-06-21, факс (495) 223-3071

www.bergab.ru Берг АБ bergab@ya.ru Тел. (495)-228-06-21, факс (495) 223-3071

SSPB Type

– Block Type –

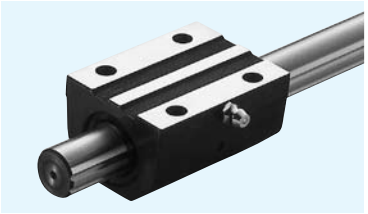

part number structure

example **SSPB 25-2-T1-436-P/CU**

- SSPB type
- nominal diameter
- number of blocks attached to one shaft
- preload symbol
  blank: standard
  T1: light
  T2: medium
- spline shaft total length
- accuracy grade
  blank: high
  P: precision
- with special specification

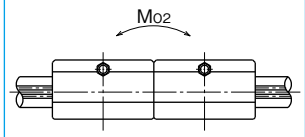

When two blocks are used in close contact.

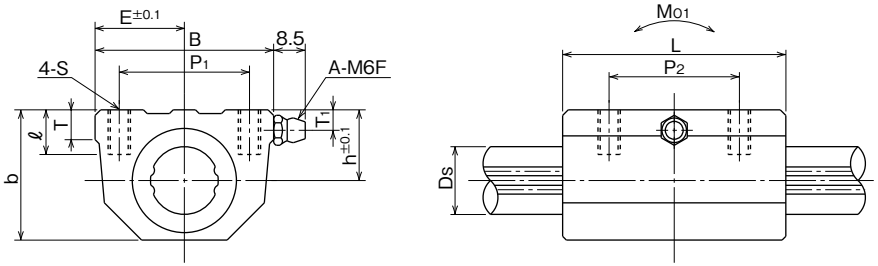

part number	major dimensions h mm	B mm	L mm	E mm	b mm	T mm	P_1 mm	P_2 mm	S	ℓ mm	T_1 mm
SSPB20	19	48	60	24	35	8	35	35	M6	12	5.5
SSPB25	22	60	70	30	41.5	10	40	40	M8	12	6
SSPB30	26	70	80	35	50	12	50	50	M8	12	7
SSPB40	32	86	100	43	63	15	60	60	M10	15	8

Ds mm	tolerance μm	basic torque rating dynamic C_T N・m	static C_{0T} N・m	basic load rating dynamic C kN	static Co kN	allowable static moment M_{01} N・m	M_{02} N・m	second cross-sectional moment of inertia mm^4	cross-sectional coefficient mm^3	mass block kg	shaft kg/m	size
18.2	0 −21	83	133	7.84	11.3	63	500	5.05×10^3	5.54×10^2	0.55	2.0	**20**
23		162	239	12.3	16.1	104	830	1.27×10^4	1.11×10^3	0.9	3.1	**25**
28		289	412	18.6	23.2	181	1,470	2.75×10^4	1.96×10^3	1.4	4.8	**30**
37.4	0/−25	637	882	30.8	37.5	358	2,940	8.73×10^4	4.67×10^3	2.5	8.6	**40**

1kN≒102kgf 1N・m≒0.102kgf・m

www.bergab.ru Берг АБ bergab@ya.ru Тел. (495)-228-06-21, факс (495) 223-3071

www.bergab.ru Берг АБ bergab@ya.ru Тел. (495)-228-06-21, факс (495) 223-3071

STANDARD BALL SPLINE

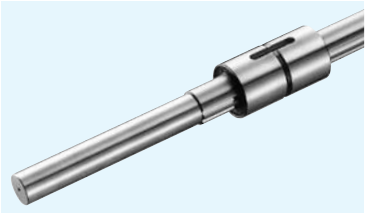

part number structure

example **SSP 10 S-2-T1-400**

- nut shape
  - **SSP**: cylindrical type
  - **SSPM**: keyless type
  - **SSPF**: flange type
  - **SSPT**: two side cut flange type
  - **SSPB**: block type
- nominal diameter
- standard spline shaft
- number of nuts attached to one shaft
- preload symbol
  - **blank**: standard
  - **T1**: light
  - **T2**: medium
- standard lengthL

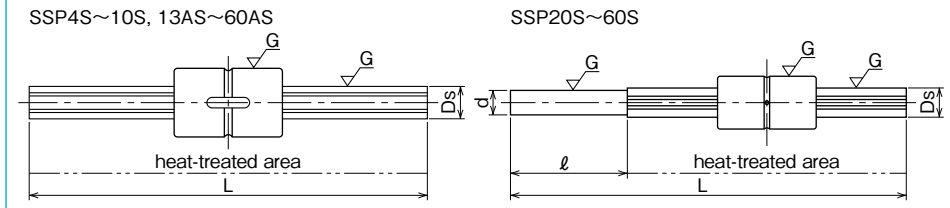

nominal diameter	Ds mm	Ds tolerance μm	d mm	d tolerance μm	ℓ mm	standard length L mm					SSP	SSPM	SSPF	SSPT	SSPB
4	4	0	—	—	—	100	150	200	300	—	○	—	—	—	—
6	6	−12	—	—	—	150	200	300	400	—	○	○	○	○	—
8	8	0	—	—	—	150	200	300	400	500	○	○	○	○	—
10	10	−15	—	—	—	200	300	400	500	600	○	○	○	○	—
13A	13	0	—	—	—	200	300	400	500	600	○	—	○	—	—
16A	16	−18	—	—	—	200	300	400	500	600	○	—	○	—	—
20A	20	0	—	—	—	300	400	500	800	1,000	○	—	○	—	—
25A	25	−21	—	—	—	300	400	500	800	1,000	○	—	○	—	—
30A	30		—	—	—	—	500	1,000	1,500	2,000	○	—	○	—	—
40A	40	0	—	—	—	—	500	1,000	1,500	2,000	○	—	○	—	—
50A	50	−25	—	—	—	—	500	1,000	1,500	2,000	○	—	○	—	—
60A	60	0/−30	—	—	—	—	500	1,000	1,500	2,000	○	—	○	—	—
20	18.2	0	15	0/−18	150	350	450	550	650	—	○	—	○	—	○
25	23	−21	20	0	150	350	450	550	650	850	○	—	○	—	○
30	28		25	−21	150	450	550	650	750	1,150	○	—	○	—	○
40	37.4	0	30		150	550	750	950	1,150	—	○	—	○	—	○
50	47	−25	40	0	150	650	850	1,150	1,350	—	○	—	○	—	—
60	56.5	0/−30	45	−25	150	650	850	1,150	1,350	—	○	—	○	—	—

- Tolerance of length L for nominal diameter sizes 4 to 10, 13A to 60A: JIS B0405 coarse grade.
- Please refer to dimension tables for nut shape and dimensions.

○ yes — none

COMMERCIAL BALL SPLINE

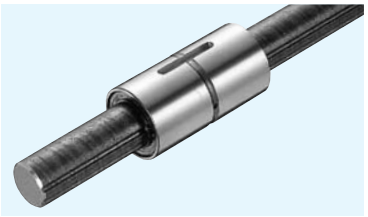

part number structure

example **SSPF 25 C-2-436/CU**

- nut shape
  - **SSP**: cylindrical type
  - **SSPF**: flange type
  - **SSPB**: block type
- nominal diameter
- commercial spline shaft
- number of nuts attached to one shaft
- spline shaft total length
- with special specification

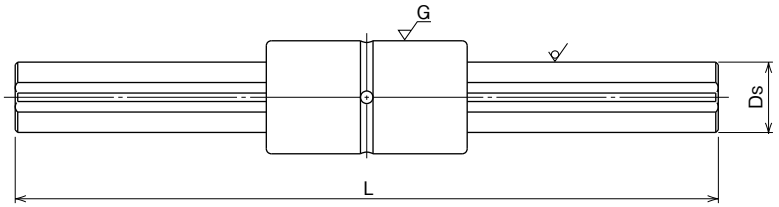

nominal diameter	Ds mm	standard length L mm						SSP	SSPF	SSPB
20	18.2	500	1,000	2,000	3,000	4,000	5,000	○	○	○
25	23	500	1,000	2,000	3,000	4,000	5,000	○	○	○
30	28	500	1,000	2,000	3,000	4,000	5,000	○	○	○
40	37.4	500	1,000	2,000	3,000	4,000	5,000	○	○	○
50	47	500	1,000	2,000	3,000	4,000	5,000	○	○	—

- Tolerance of total length and length of splined portion
  total length up to 4,000: JIS B0405 coarse grade
  total length greater than 4,000: ±5.0mm
  Please specify tolerances when required.
- Please refer to dimension tables for nut shape and dimensions.
- When a commercial shaft is used, the load rating of the nut is approximately 70% of indicated rating in the dimension tables.

○ yes — none

www.bergab.ru Берг АБ bergab@ya.ru Тел. (495)-228-06-21, факс (495) 223-3071

www.bergab.ru Берг АБ bergab@ya.ru Тел. (495)-228-06-21, факс (495) 223-3071

ROTARY BALL SPLINE

The NB rotary ball spline can be used for both rotational motion and linear motion. The applications include SCARA robots, the vertical shaft of assembly equipment, tool changers, and loaders, etc.

STRUCTURE AND ADVANTAGES

The NB rotary ball spline nut consists of a spline nut and a rotating portion using cross rollers.

Reduced Number of Parts

Because of the single-body construction consisting of the rotating element and the spline element, the number of parts is reduced so that the accumulated errors are also reduced.

Compact and Light

The cross rollers are directly attached to the ball spline's outer cylinder, resulting in a compact and light design.

Substantial Reduction in Installation Cost

The use of cross rollers keeps the housing thickness to a minimum, making the ball spline light and easy to install.

High Rigidity

The use of cross rollers and 4-row ball circuits structure provide high rigidity in spite of the compact design.

High Accuracy

The cross rollers ensure accurate positioning in the rotational direction.

Figure B-20 Structure of NB Rotary Ball Spline

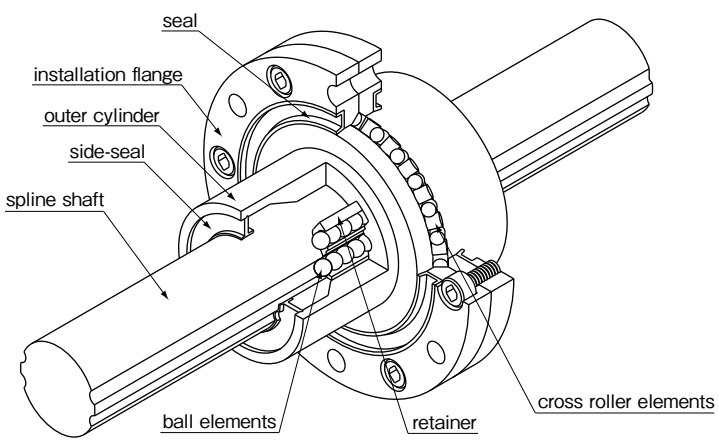

ACCURACY

The accuracy of the NB rotary ball spline is measured at the points shown in Figure B-21.

Figure B-21 Accuracy Measurement Points

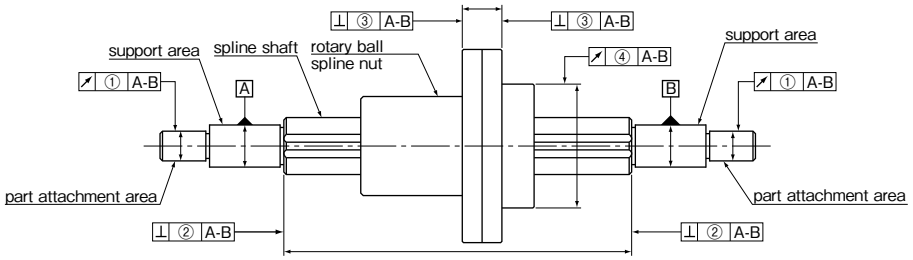

Note: The support area is the portion where, for example, radial bearings are attached in order to support the spline shaft. The part attachment area is the portion to which other parts, such as gears are attached.

Tolerance of Spline Shaft Groove Torsion (Max.)

The groove torsion is indicated per 100mm, arbitrarily set as the effective length of the spline section. When the spline length is under 100mm or exceeds 100mm, the value shown in Table B-14 decreases or increases proportionally to the spline length.

Table B-14 Tolerance of Spline Shaft Groove Torsion (Max.)

tolerance
13μm/100mm

Table B-15 Tolerance Relative to Spline Support Area (Max.) unit/μm

part number	①radial runout of part attachment area	②perpendicularity of the end of the spline shaft section	③perpendicularity of the flange
SPR 6	14	9	14
SPR 8			
SPR10	17		
SPR13	19	11	18
SPR16			
SPR20A			
SPR25A	22	13	21
SPR30A			
SPR40A	25	16	25
SPR50A			
SPR60A	29	19	29
SPR20	19	11	18
SPR25	22	13	21
SPR30			
SPR40	25	16	25
SPR50			
SPR60	29	19	29

Table B-16 ④Radial Runout of Outer Surface of Rotary Spline Nut Relative to Spline Support Area (Max.) unit/μm

spline shaft total length (mm)		part number					
greater than	or less	SPR 6、8	SPR 10	SPR 13、16	SPR 20A、20、25A、25、30A、30	SPR 40A、40、50A、50	SPR 60A、60
—	200	46	36	34	32	32	30
200	315	89	54	45	39	36	34
315	400	126	68	53	44	39	36
400	500	163*	82	62	50	43	38
500	630	—	102	75	57	47	41
630	800	—	—	92	68	54	45
800	1,000	—	—	115	83	63	51
1,000	1,250	—	—	153	102	76	59
1,250	1,600	—	—	195*	130	93	70
1,600	2,000	—	—	—	171	118	86

※Please contact NB for spline shafts exceeding 2000mm. * SPR6 shaft Max. length: 400mm SPR13, SPR16 Max.length: 1500mm

www.bergab.ru Берг АБ bergab@ya.ru Тел. (495)-228-06-21, факс (495) 223-3071

www.bergab.ru Берг АБ bergab@ya.ru Тел. (495)-228-06-21, факс (495) 223-3071

PRELOAD AND CLEARANCE

The amount of clearance and preload for the spline portion and the cross roller portion are expressed in terms of the clearance in the rotational direction and the clearance in the radial direction, respectively. Three levels of preload are available: standard, light (T1), and medium (T2).

Table B-17 Preload and Clearance in Rotational and Radial Direction unit／μm

	part number	standard	light (T1)	medium (T2)
linear motion	SPR 6	−2～+1	− 6～−2	−
	SPR 8			
	SPR10	−3～+1	− 8～−3	
	SPR13			−13～− 8
	SPR16			
	SPR20A	−4～+2	−12～−4	−20～−12
	SPR25A			
	SPR30A			
	SPR40A	−6～+3	−18～−6	−30～−18
	SPR50A			
	SPR60A			
	SPR20	−4～+2	−12～−4	−20～−12
	SPR25			
	SPR30			
	SPR40	−6～+3	−18～−6	−30～−18
	SPR50			
	SPR60			
rotational motion	SPR 6 ～ SPR60	−1～+3		

Table B-18 Operating Conditions and Preload

preload	symbol	operating conditions
standard	blank	minute vibration is applied. a precise motion is required. moment is applied in a given direction.
light	T1	light vibration is applied. light torsional load is applied. cyclic torque is applied.
medium	T2	shock/vibration is applied. over-hang load is applied. torsional load is applied.

SPECIAL REQUIREMENTS

NB provides customization such as shaft-end machining, spline nut machining, and surface treatment per customer requests. Table B-19 shows a list of recommended inner diameters for hollow spline shaft. Please contact NB for the inner diameter of SPR20～SPR60.

Figure B-22 Examples of Shaft-end Machining

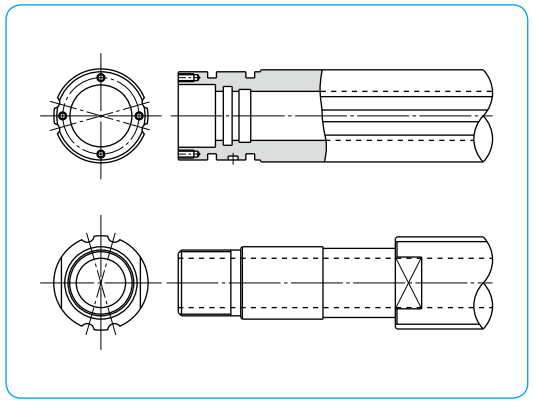

Table B-19 Recommended Inner Diameter for Hollow Spline Shaft

part number	outer diameter Ds mm	inner diameter d mm	cross-sectional coefficient Z mm	second moment of inertia I mm^4
SPR 6	6	2	19.4	58
SPR 8	8	3	46.5	186
SPR10	10	4	89.6	448
SPR13	13	6	193	1,260
SPR16	16	8	348	2,780
SPR20A	20	10	686	6,860
SPR25A	25	15	1,230	15,400

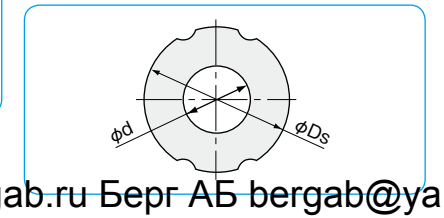

MOUNTING

The flange attachment screws have been pre-adjusted for smooth rotary movement and should never be loosened. Shock loading to the flange assembly should be avoided as this can degrade the accuracy of movement and deteriorate the overall performance.

Mounting of Rotary Ball Spline

When the flange is to be used with a faucet joint (as shown in Figure B-23) the housing bore should be machined to a tolerance of H7 and to a minimum depth of 60% of the flange thickness. If only a light load is applied to the SPR in operation, the flange can be used without a pilot end.
Please fix the mounting screws diagonally in steps with progressively applying more torque at each step. Please use a torque wrench for a uniform torque. The recommended torque values for medium-hardness steel screws are listed in Table B-20.

Insertion of Spline Shaft

When inserting the spline shaft into the rotary ball spline nut, ensure that the ball elements do not drop out. This is done by aligning the raceway grooves of the shaft with the rows of ball elements and the seal -lip of the nut. Then carefully insert the spline shaft through the spline nut.

Figure B-23 Flange Mounting Method

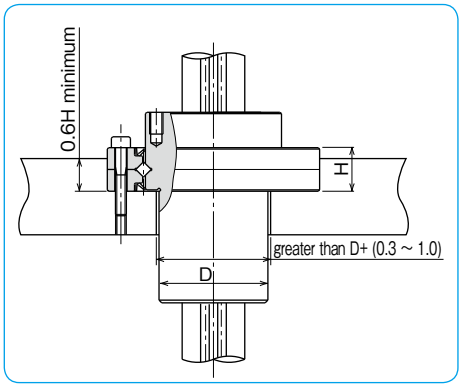

Table B-20 Recommended Torque unit／N・m

mounting screw	M2	M2.5	M3	M4	M6	M8
recommended torque	0.4	0.9	1.4	3.2	11.2	27.6

(for alloy steel screw)

LUBRICATION

Since NB rotary ball spline nuts are equipped with seals at both the spline portion and the rotational portion, the lubricant is retained for an extended period of time. The spline nut is prelubricated with lithium soap based grease prior to shipment for immediate use. Please relubricate with a similar type of grease periodically depending on the operating conditions.
Low dust generation grease is available from NB standard grease. (refer to page Eng-39)
However, an oil lubricant is recommended for high-speed applications. A grease fitting is optional (Figure B-24), please contact NB for details.

Figure B-24 Example of Installed Grease Fitting

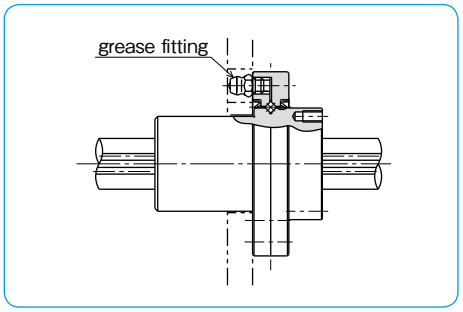

www.bergab.ru Берг АБ bergab@ya.ru Тел. (495)-228-06-21, факс (495) 223-3071

www.bergab.ru Берг АБ bergab@ya.ru Тел. (495)-228-06-21, факс (495) 223-3071

OPERATING CONDITIONS

The performance of the rotary ball spline is affected by the operating conditions of the application. The operating conditions should therefore be carefully taken into consideration.

Operating Temperature

Resin retainers are used in the rotary ball spline, so the operating temperature should never exceed 80℃.

Dust Prevention

Foreign particles or dust in the rotary ball spline nut affects the motion accuracy and shortens the life time. Standard seals will perform well for dust prevention under normal operating conditions, however, in a harsh environment it is necessary to attach bellows or protective covers.

APPLICATION EXAMPLES

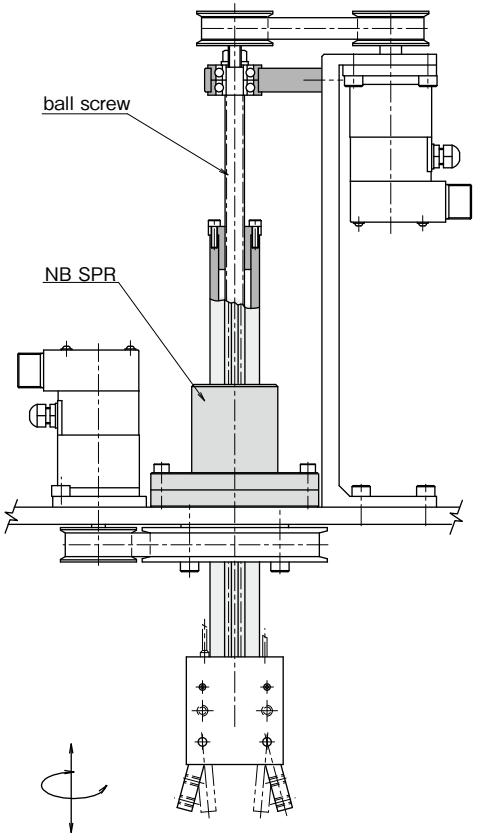

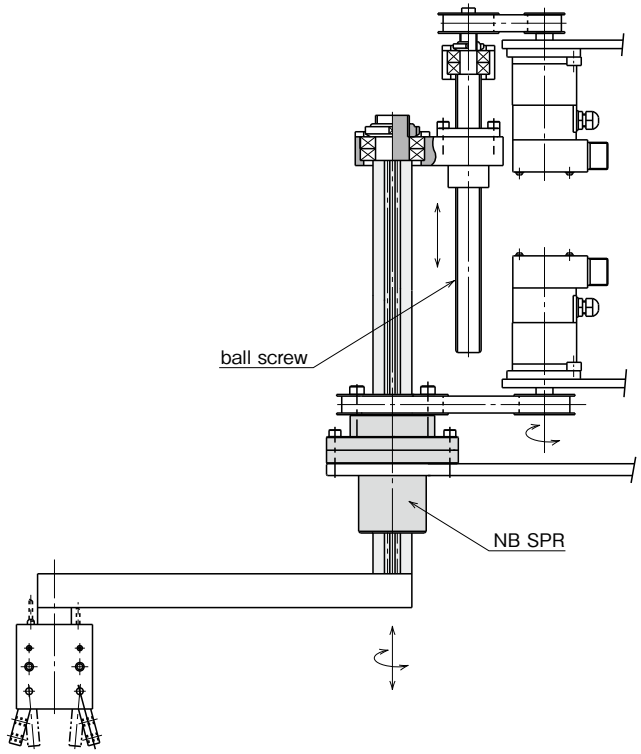

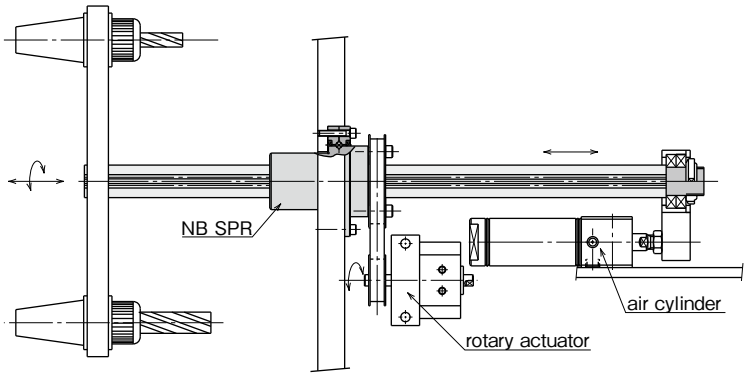

www.bergab.ru Берг АБ bergab@ya.ru Тел. (495)-228-06-21, факс (495) 223-3071

www.bergab.ru Берг АБ bergab@ya.ru Тел. (495)-228-06-21, факс (495) 223-3071

SPR TYPE

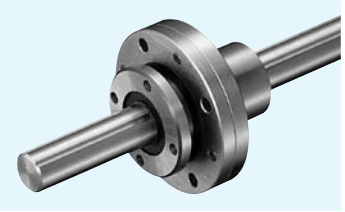

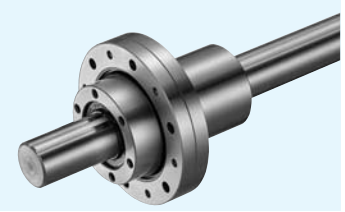

part number structure

example **SPR 25 - 2 - T1 - 436 / CU**

- SPR type
- nominal diameter
- number of nuts attached to one shaft
- preload symbol
  blank: standard
  T1: light
  T2: medium
- spline shaft total length
- with special specification

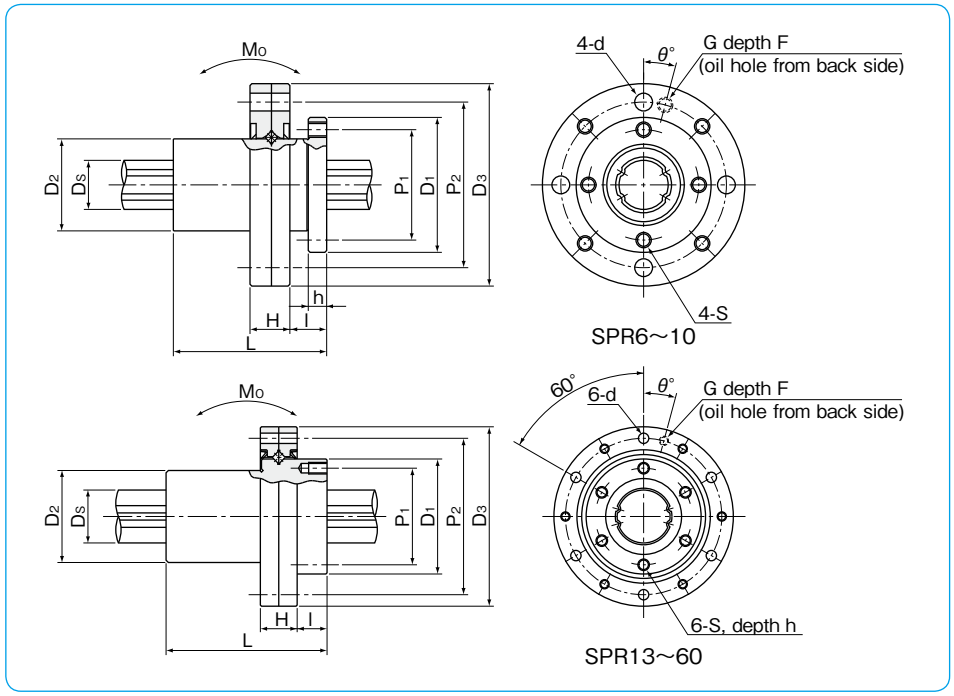

part number	major dimensions D1 mm	D1 tolerance μm	D2 mm	L mm	L tolerance mm	P1 P.C.D. mm	S	h mm	major dimensions of cross roller bearing l mm	H mm	D3 mm	D3 tolerance μm	P2 P.C.D. mm	d mm	G	F mm	θ
SPR 6	20	0 −21	13	25	0 −0.2	16	M2	2.5	5	6.5	30	0/−21	24	2.4	M3	2.6	20°
SPR 8	22		15	25		18	M2.5	3	6	6.5	33	0 −25	27	2.9	M3	2.6	20°
SPR10	27		19	33		22	M3	4	8	7	40		33	3.4	M3	2.8	20°
SPR13	29		24	36		24	M3	5	8	9	50		42	3.4	M3	3.6	15°
SPR16	36	0 −25	31	50		30	M4	6	10	11	60	0 −30	50	4.5	M3	4.4	15°
SPR20A	44		35	63		38	M4	7	12	13	72		62	4.5	M6×0.75	5.2	15°
SPR25A	55		42	71	0 −0.3	47	M5	8	13	16	82		72	4.5	M6×0.75	6.4	15°
SPR30A	61	0 −30	47	80		52	M6	10	17	17	100	0 −35	86	6.6	M6×0.75	6.8	15°
SPR40A	76		64	100		66	M6	10	23	20	120		104	9	M6×0.75	8	15°
SPR50A	92	0 −35	80	125		80	M8	13	24	22	134	0 −40	118	9	M6×0.75	8.8	15°
SPR60A	107		90	140		95	M8	13	25	25	155		137	9	M6×0.75	10	15°
SPR20	40	0 −25	34	60	0/−0.2	34	M4	7	12	13	66	0 −30	56	4.5	M6×0.75	5.2	15°
SPR25	50		40	70	0 −0.3	42	M5	8	13	16	78		68	4.5	M6×0.75	6.4	15°
SPR30	61	0 −30	47	80		52	M6	10	17	17	100	0 −35	86	6.6	M6×0.75	6.8	15°
SPR40	76		62	100		64	M6	10	23	20	120		104	9	M6×0.75	8	15°
SPR50	88	0 −35	75	112		77	M8	13	24	22	130	0 −40	114	9	M6×0.75	8.8	15°
SPR60	102		90	127		90	M8	13	25	25	150		132	9	M6×0.75	10	15°

※Please contact NB for the grease fitting and relubrication method.

spline shaft Ds mm	Ds tolerance μm	rotary ball spline basic torque rating dynamic CT N・m	static COT N・m	basic load rating dynamic C kN	static Co kN	cross roller bearing basic load rating dynamic CR kN	static COR kN	allowable static moment Mo N・m	second cross-sectional moment of inertia mm⁴	cross-sectional coefficient mm³	mass nut kg	shaft kg/m	※maximum revolutions rpm	size
6	0/−12	1.5	2.4	1.22	2.28	0.6	0.5	5.1	5.9×10	1.97×10	0.04	0.21	2,940	6
8	0 −15	2.1	3.7	1.45	2.87	1.2	1.10	7.4	1.9×10^2	4.76×10	0.05	0.38	2,580	8
10		4.4	8.2	2.73	5.07	2.4	2.45	18.0	4.61×10^2	9.22×10	0.09	0.60	2,060	10
13	0 −18	21	39.2	2.67	4.89	2.9	3.70	13.7	1.38×10^3	2.13×10^2	0.17	1.0	1,350	13
16		60	110	6.12	11.2	5.6	6.70	46	2.98×10^3	3.73×10^2	0.33	1.5	1,080	16
20	0 −21	105	194	8.9	16.3	6.55	8.79	63	7.35×10^3	7.34×10^2	0.57	2.4	890	20A
25		189	346	12.8	23.4	9.63	12.7	171	1.79×10^4	1.43×10^3	0.81	3.7	700	25A
30		307	439	18.6	23.2	11.8	17.1	181	3.66×10^4	2.44×10^3	1.19	5.38	640	30A
40	0 −25	674	934	30.8	37.5	23.0	32.3	358	1.15×10^5	5.75×10^3	2.25	9.55	510	40A
50		1,291	2,955	40.3	64.9	27.8	44.0	690	2.83×10^5	1.13×10^4	3.57	15.0	430	50A
60	0/−30	1,577	2,629	47.7	79.5	29.0	48.8	881	5.91×10^5	1.97×10^4	5.03	21.6	370	60A
18.2	0 −21	83	133	7.84	11.3	5.90	7.35	63	5.05×10^3	5.54×10^2	0.45	2.0	980	20
23		162	239	12.3	16.1	9.11	11.5	104	1.27×10^4	1.11×10^3	0.75	3.1	770	25
28		289	412	18.6	23.2	11.8	17.1	181	2.75×10^4	1.96×10^3	1.25	4.8	640	30
37.4	0 −25	637	882	30.8	37.5	22.8	32.3	358	8.73×10^4	4.67×10^3	2.30	8.6	510	40
47		1,390	3,180	46.1	74.2	27.2	42.1	696	2.16×10^5	9.21×10^3	3.10	13.1	450	50
56.5	0/−30	2,100	4,800	58.0	127.4	26.5	42.6	1,300	4.51×10^5	1.60×10^4	4.70	19	400	60

※Maximum revolutions for grease lubrication.
Contact NB for further information in case oil lubrication is required.

1kN≒102kgf　1N・m≒0.102kgf・m

www.bergab.ru Берг АБ bergab@ya.ru Тел. (495)-228-06-21, факс (495) 223-3071

www.bergab.ru Берг АБ bergab@ya.ru Тел. (495)-228-06-21, факс (495) 223-3071

STROKE BALL SPLINE

The NB stroke ball spine SPLFS type is a high accuracy linear motion bearing with a limited stroke, to which both radial load and torque can be applied at the same time. It operates with extremely small dynamic friction.

STRUCTURE AND ADVANTAGES

The NB stroke ball spline consists of a nut and a shaft both with raceway grooves. The flanged spline nut consists of an outer cylinder, a retainer, side-rings, and ball elements.
Since the retainer in the nut is equipped with ball pockets, the ball elements do not contact each other, which allows for a smooth linear motion. The stroke is limited since the retainer is a non-circulating type. For normal operation, it is recommended to consider 80% of the maximum stroke shown in the dimension table as an actual stroke length.

Extremely Small Dynamic Friction and Low Noise

The rolling elements are separated by the ball pockets so that they do not contact each other. The stroke length is limited, but extremely small dynamic friction and low noise are realized because the rolling elements do not circulate.

Compact-Size

With the nut about 20% smaller than conventional ball splines, it contributes to space saving.

All Stainless Steel Type

Since all the components are made of stainless steel, this stroke ball spline has an excellent corrosion resistance and heat resistance (operating temperature: −20 to 140℃). It is ideal for clean room or vacuum applications.

Lubrication

A lubricant groove and two lubrication holes are provided on the outer surface of the nut, which allow for an easy designing of lubricant replenishment.

Figure B-25 Structure of SPLFS type

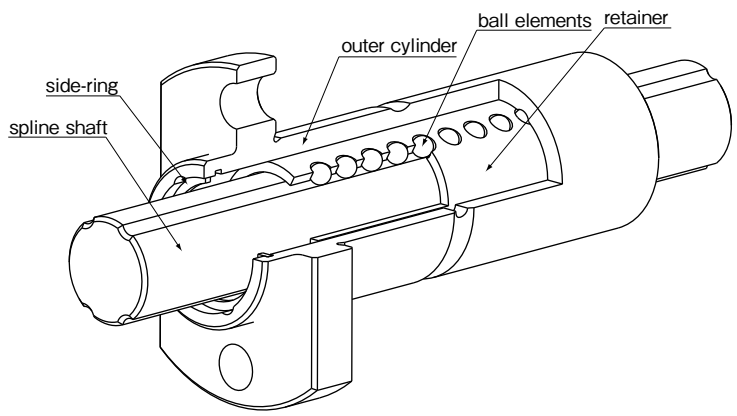

ACCURACY

The accuracy of the NB stroke ball spline is measured at the points shown in Figure B-26.

Figure B-26 Accuracy Measurement Points

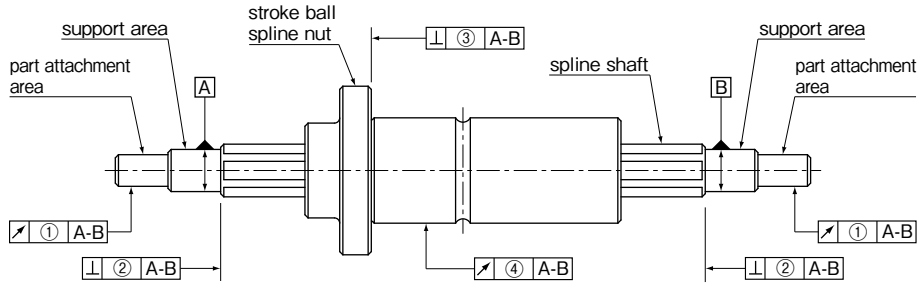

Note: The support area is the portion where, for example, radial bearings are attached in order to support the spline shaft.
The part attachment area is the portion to which other parts, such as gears are attached.

Tolerance of Spline Shaft Groove Torsion (Max.)

The groove torsion is indicated per 100mm, arbitrarily set as the effective length of the spline section. When the spline length is under 100mm or exceeds 100mm, the value shown in Table B-21 decreases or increases proportionally to the spline length.

Table B-21 Tolerance of Spline Shaft Groove Torsion (Max.)

tolerance
13μm/100mm

Table B-22 Tolerance Relative to Spline Support Area (Max.) unit／μm

part number	① radial runout of part attachment area	② perpendicularity of the end of the spline shaft section	③ perpendicularity of the flange
SPLFS 6	14	9	11
SPLFS 8	14	9	11
SPLFS10	17	9	13
SPLFS13	19	11	13
SPLFS16	19	11	13

Table B-23 ④Radial Runout of Outer Surface of Spline Nut Relative to Spline Support Area (Max.) unit／μm

spline shaft total length (mm)		part number		
greater than	or less	SPLFS6、8	SPLFS10	SPLFS13、16
–	200	46	36	34
200	315	89	54	45
315	400	126*	68	53
400	500	163*	82	62
500	630	–	102	75
630	800	–	–	92
800	1,000	–	–	115
1,000	1,250	–	–	153
1,250	1,500	–	–	195

* SPLFS6 maximum shaft length: 400 mm

www.bergab.ru Берг АБ bergab@ya.ru Тел. (495)-228-06-21, факс (495) 223-3071

www.bergab.ru Берг АБ bergab@ya.ru Тел. (495)-228-06-21, факс (495) 223-3071

PRELOAD AND CLEARANCE

Preload and clearance are expressed in terms of clearance in the rotational direction. For the SPLFS type, only the standard preload is available as shown in Table B-24. Please contact NB if a special preload is required.

Table B-24 Preload and Clearance in Rotational Direction unit／μm

part number	standard
SPLFS 6	−4~0
SPLFS 8	−4~0
SPLFS10	−4~0
SPLFS13	−4~0
SPLFS16	−4~0

COMPARISON OF DYNAMIC FRICTIONAL RESISTANCE

Figure B-27 Comparison of Dynamic Friction

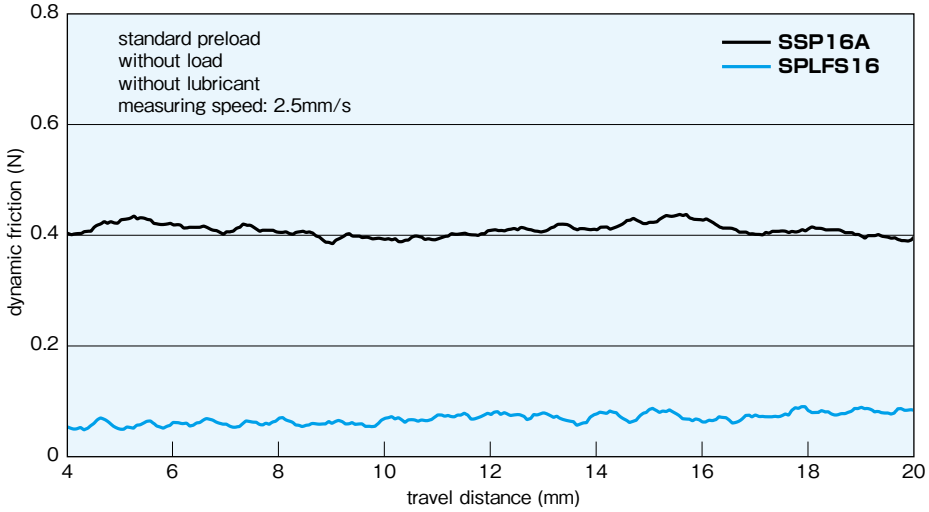

NOTES ON USE

Dust Prevention

Since the stroke ball spline is designed and manufactured for operation with an extremely small dynamic frictional resistance, seals that increase frictional resistance are not equipped as a standard feature. Please contact NB for a special requirement of seals. For use under harsh conditions, the stroke ball spline should be protected using bellows and protective covers.

Retainer Slippage

If the stroke ball spline is used at a high speed or with a vertical shaft, or under an asymmetric load or oscillation, a retainer slippage may occur. For general operation, it is recommended to consider 80% of the maximum stroke length shown in the dimension table as a stroke length.
To prevent the retainer slippage, it is recommended to do a full-stroke movement of the nut whenever necessary in order for the retainer to be relocated to the center.

www.bergab.ru Берг АБ bergab@ya.ru Тел. (495)-228-06-21, факс (495) 223-3071

www.bergab.ru Берг АБ bergab@ya.ru Тел. (495)-228-06-21, факс (495) 223-3071

SPLFS TYPE

— Two Side Cut Flange Type —

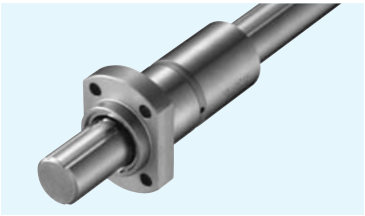

part number structure

example **SPLFS 16-2-200/CU**

- SPLFS type
- nominal diameter
- number of nuts attached to one shaft
- spline shaft total length
- with special specification

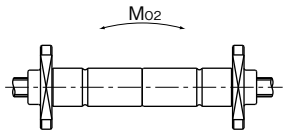

When two spline nuts are used in close contact.

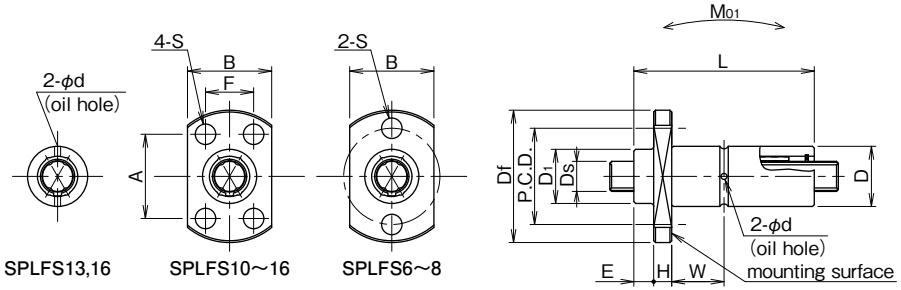

part number	maximum stroke	D		D1	L		E	Df	H	B	P.C.D.	A	F	S
				major dimensions										
	mm	mm	tolerance μm	mm	mm	tolerance mm	mm	mm	mm	mm	mm	mm	mm	mm
SPLFS 6	22	11	0 −8	10	40	0 −0.2	3.3	23	4	14	17	—	—	3.4
SPLFS 8	20	13		12.5	40		3.3	25.5	4	16	19.5	—	—	3.4
SPLFS10	28	16		15.5	50		3.3	28.5	5	20	—	18	13	3.4
SPLFS13	24	20	0 −9	19.5	50		4.8	36	5	25	—	22	17	3.4
SPLFS16	26	24		23.5	60		4.8	40	7	29	—	25	19	4.5

W	d	Ds		basic torque rating dynamic	basic torque rating static	basic load rating dynamic	basic load rating static	allowable static moment		second cross-sectional moment of inertia	cross-sectional coefficient	mass nut	mass shaft	size
mm	mm	mm	tolerance μm	C_T N・m	C_{0T} N・m	C kN	Co kN	M_{01} N・m	M_{02} N・m	mm^4	mm^3	g	kg/m	
12.7	1.2	6	0/−12	2.3	3.8	1.8	3.0	11.2	45	5.9×10	1.97×10	21.5	0.21	6
12.7	1.2	8	0	3.3	5.5	2.02	3.37	13.1	52	1.9×10^2	4.76×10	27.0	0.38	8
16.7	1.5	10	−15	6.5	10.9	3.21	5.35	25.6	102	4.61×10^2	9.22×10	47.7	0.6	10
15.2	1.5	13	0	27.6	50.7	4.15	7.6	38.8	155	1.38×10^3	2.13×10^2	75.3	1.0	13
18.2	2.0	16	−18	62.8	115	7.66	14	88.3	353	2.98×10^3	3.73×10^2	123.5	1.5	16

1kN≒102kgf 1N・m≒0.102kgf・m

www.bergab.ru Берг АБ bergab@ya.ru Тел. (495)-228-06-21, факс (495) 223-3071

www.bergab.ru Берг АБ bergab@ya.ru Тел. (495)-228-06-21, факс (495) 223-3071

SSP TYPE

– Cylindrical Spline Nut –

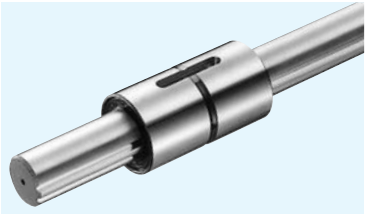

part number structure

example **SSP 80 L-2-T1-600-P/CU**

- specification
  SSP: standard
  SSPS: anti-corrosion
- nominal diameter
- nut length
  blank: standard
  L: long
- number of nuts attached to one shaft
- preload symbol
  blank: standard
  T1: light
  T2: medium
- spline shaft total length
- accuracy grade
  blank: high
  P: precision
- with special specification

Note: retainer material is resin.

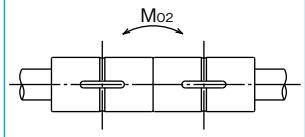

When two spline nuts are used in close contact.

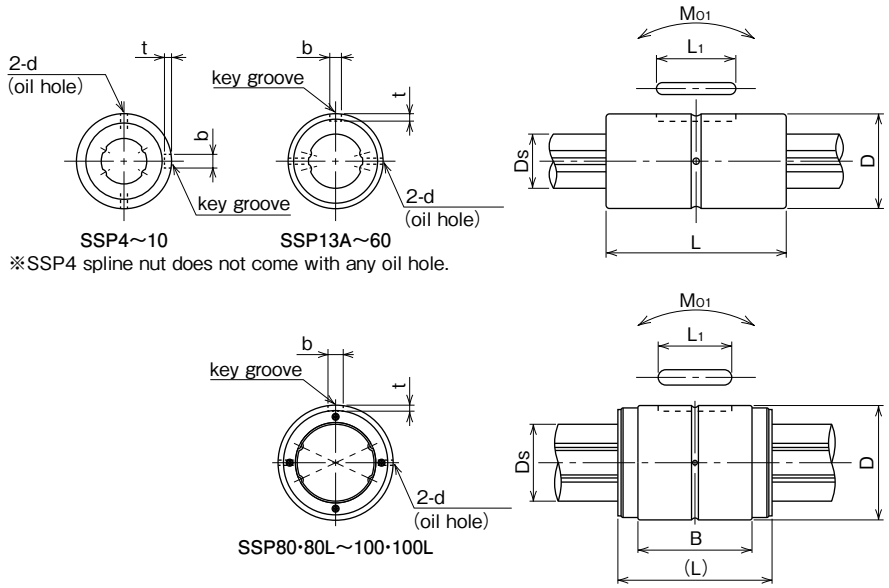

part number standard	part number anti-corrosion	D mm	D tolerance μm	L mm	L tolerance mm	B mm	b mm	b tolerance μm	t +0.05 0 mm	L1 mm	d mm	Ds mm	Ds tolerance μm
SSP 4	SSPS 4	10	0/−9	16	0 −0.2	–	2	+14 0	1.2	6	–	4	0 −12
SSP 6	SSPS 6	14	0 −11	25			2.5		1.2	10.5	1	6	
SSP 8	SSPS 8	16		25			2.5		1.2	10.5	1.5	8	0 −15
SSP 10	SSPS10	21	0 −13	33			3		1.5	13	1.5	10	
SSP 13A	SSPS13A	24		36			3		1.5	15	1.5	13	0 −18
SSP 16A	SSPS16A	31	0 −16	50			3.5	+18 0	2	17.5	2	16	
SSP 20A	SSPS20A	35		63			4		2.5	29	2	20	0 −21
SSP 25A	SSPS25A	42		71	0 −0.3		4		2.5	36	3	25	
SSP 30A	—	47		80			4		2.5	42	3	30	
SSP 40A	—	64	0 −19	100			6		3.5	52	4	40	0 −25
SSP 50A	—	80		125			8	+22/0	4	58	4	50	
SSP 60A	—	90	0 −22	140			12	+27 0	5	67	4	60	0 −30
SSP 80	—	120		160	–	118.2	16		6	76	5	80	
SSP 80L	—	120		217		175.2				110			
SSP100	—	150	0 −25	185		132.6	20	+33 0	7	110	5	100	0 −35
SSP100L	—	150		248		195.6				160			
SSP 20	SSPS20	32	0 −16	60	0/−0.2	–	4	+18 0	2.5	26	2	18.2	0 −21
SSP 25	SSPS25	37		70	0 −0.3		5		3	33	3	23	
SSP 30	—	45		80			7	+22 0	4	41	3	28	
SSP 40	—	60	0 −19	100			10		4.5	55	4	37.4	0 −25
SSP 50	—	75		112			15	+27 0	5	60	4	47	
SSP 60	—	90	0/−22	127			18		6	68	4	56.5	0/−30

basic torque rating dynamic C_T N·m	basic torque rating static C_{0T} N·m	basic load rating dynamic C kN	basic load rating static Co kN	allowable static moment M_{01} N·m	allowable static moment M_{02} N·m	second cross-sectional moment of inertia mm^4	cross-sectional coefficient mm^3	mass nut kg	mass shaft kg/m	size
0.74	1.05	0.86	1.22	1.97	10.3	1.18×10	5.90	0.0065	0.10	4
1.5	2.4	1.22	2.28	5.1	40	5.9×10	1.97×10	0.019	0.21	6
2.1	3.7	1.45	2.87	7.4	50	1.9×10^2	4.76×10	0.023	0.38	8
4.4	8.2	2.73	5.07	18.0	116	4.61×10^2	9.22×10	0.054	0.60	10
21	39.2	2.67	4.89	13.7	109	1.38×10^3	2.13×10^2	0.07	1.0	13A
60	110	6.12	11.2	46	299	2.98×10^3	3.73×10^2	0.15	1.5	16A
105	194	8.9	16.3	110	560	7.35×10^3	7.34×10^2	0.22	2.4	20A
189	346	12.8	23.4	171	1,029	1.79×10^4	1.43×10^3	0.33	3.7	25A
307	439	18.6	23.2	181	1,470	3.66×10^4	2.44×10^3	0.36	5.38	30A
674	934	30.8	37.5	358	2,940	1.15×10^5	5.75×10^3	0.95	9.55	40A
1,291	2,955	40.3	64.9	690	4,084	2.83×10^5	1.13×10^4	1.9	15.0	50A
1,577	2,629	47.7	79.5	881	5,473	5.91×10^5	1.97×10^4	2.3	21.6	60A
3,860	6,230	83.1	134	2,000	11,100	1.93×10^6	4.83×10^4	5.1	39	80
5,120	9,340	110	201	4,410	21,100			7.6		80L
6,750	11,570	135	199	3,360	19,300	4.69×10^6	9.38×10^4	9.7	61	100
8,960	17,300	179	298	7,340	37,700			13.9		100L
83	133	7.84	11.3	63	500	5.05×10^3	5.54×10^2	0.2	2.0	20
162	239	12.3	16.1	104	830	1.27×10^4	1.11×10^3	0.22	3.1	25
289	412	18.6	23.2	181	1,470	2.75×10^4	1.96×10^3	0.35	4.8	30
637	882	30.8	37.5	358	2,940	8.73×10^4	4.67×10^3	0.81	8.6	40
1,390	3,180	46.1	74.2	696	4,400	2.16×10^5	9.21×10^3	1.5	13.1	50
2,100	4,800	58.0	127	1,300	8,800	4.51×10^5	1.60×10^4	2.5	19	60

1kN≒102kgf 1N·m≒0.102kgf·m

www.bergab.ru Берг АБ bergab@ya.ru Тел. (495)-228-06-21, факс (495) 223-3071

www.bergab.ru Берг АБ bergab@ya.ru Тел. (495)-228-06-21, факс (495) 223-3071

SSPM TYPE

– Keyless Spline Nut –

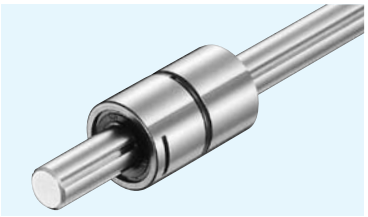

part number structure

example **SSPM 10-2-T1-200-P/CU**

- SSPM type
- nominal diameter
- number of nuts attached to one shaft
- preload symbol
  blank: standard
  T1: light
- spline shaft total length
- accuracy grade
  blank: high
  P: precision
- with special specification

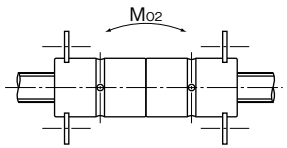

When two spline nuts are used in close contact.

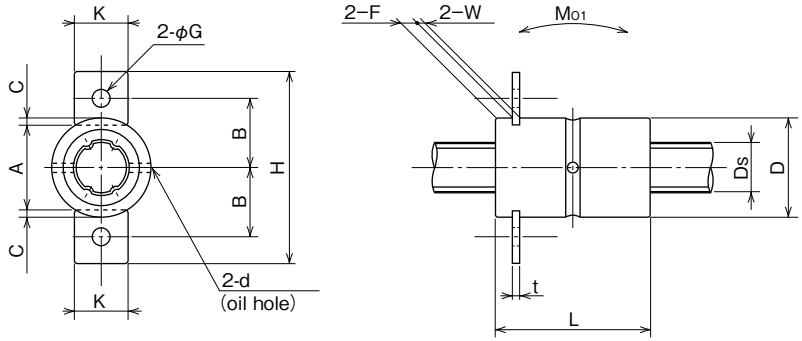

part number	D mm	D tolerance μm	L mm	L tolerance mm	F mm	W mm	C mm	A mm	d mm	B mm	H mm	K mm	G mm
	major dimensions												
SSPM 6	14	0	25	0	2.2	1.1	1.0	12.0	1	9.4	25.6	6.8	2.9
SSPM 8	16	−11	25	−0.2	2.7	1.3	1.2	13.6	1.5	11	30.6	8.5	3.5
SSPM10	21	0/−13	33		2.7	1.3	1.2	18.6	1.5	13.5	35.6	8.5	3.5

t mm	Ds mm	Ds tolerance μm	basic torque rating dynamic C_T N・m	basic torque rating static C_{0T} N・m	basic load rating dynamic C kN	basic load rating static Co kN	allowable static moment M_{01} N・m	allowable static moment M_{02} N・m	second cross-sectional moment of inertia mm^4	cross-sectional coefficient mm^3	mass nut kg	mass shaft kg/m	size
1.0	6	0/−12	1.5	2.4	1.22	2.28	5.1	40	5.9×10	1.97×10	0.019	0.21	**6**
1.2	8	0	2.1	3.7	1.45	2.87	7.4	50	1.9×10^2	4.76×10	0.023	0.38	**8**
1.2	10	−15	4.4	8.2	2.73	5.07	18.0	116	4.61×10^2	9.22×10	0.054	0.60	**10**

1kN≒102kgf 1N・m≒0.102kgf・m

www.bergab.ru Берг АБ bergab@ya.ru Тел. (495)-228-06-21, факс (495) 223-3071

www.bergab.ru Берг АБ bergab@ya.ru Тел. (495)-228-06-21, факс (495) 223-3071

SSPF TYPE

– Flange Type Nut –

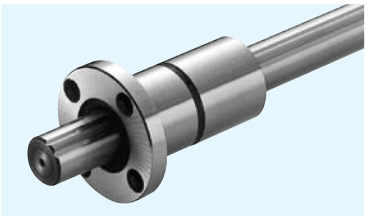

part number structure

example **SSPF 25-2-T1-436-P/CU**

- specification
  SSPF: standard
  SSPFS: anti-corrosion
- nominal diameter
- number of nuts attached to one shaft
- preload symbol
  blank: standard
  T1: light
  T2: medium
- spline shaft total length
- accuracy grade
  blank: high
  P: precision
- with special specification

Note: retainer material is resin.

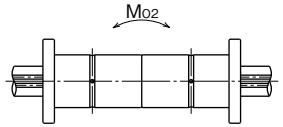

When two spline nuts are used in close contact.

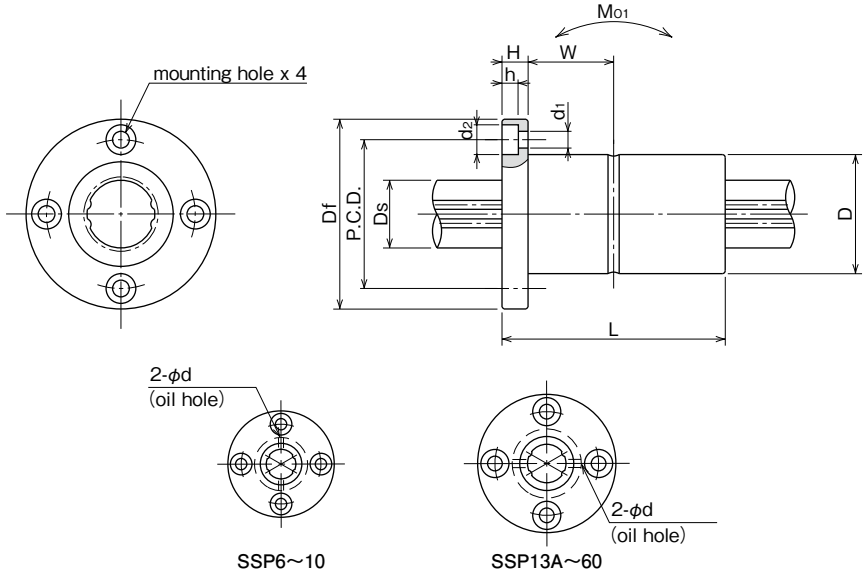

part number standard	part number anti-corrosion	D mm	D tolerance μm	L mm	L tolerance mm	Df mm	H mm	P.C.D. mm	d1×d2×h mm	W mm	d mm
SSPF 6	SSPFS 6	14	0	25		30	5	22	3.4×6.5×3.3	7.5	1
SSPF 8	SSPFS 8	16	−11	25		32	5	24	3.4×6.5×3.3	7.5	1.5
SSPF10	SSPFS10	21	0	33	0	42	6	32	4.5×8×4.4	10.5	1.5
SSPF13A	SSPFS13A	24	−13	36	−0.2	43	7	33	4.5×8×4.4	11	1.5
SSPF16A	SSPFS16A	31		50		50	7	40	4.5×8×4.4	18	2
SSPF20A	SSPFS20A	35	0	63		58	9	45	5.5×9.5×5.4	22.5	2
SSPF25A	SSPFS25A	42	−16	71		65	9	52	5.5×9.5×5.4	26.5	3
SSPF30A	—	47		80	0	75	10	60	6.6×11×6.5	30	3
SSPF40A	—	64	0	100	−0.3	100	14	82	9×14×8.6	36	4
SSPF50A	—	80	−19	125		124	16	102	11×17.5×11	46.5	4
SSPF60A	—	90	0/−22	140		129	18	107	11×17.5×11	52	4
SSPF20	SSPFS20	32		60	0/−0.2	51	7	40	4.5×8×4.4	23	2
SSPF25	SSPFS25	37	0	70		60	9	47	5.5×9.5×5.4	26	3
SSPF30	—	45	−16	80	0	70	10	54	6.6×11×6.5	30	3
SSPF40	—	60	0	100	−0.3	90	14	72	9×14×8.6	36	4
SSPF50	—	75	−19	112		113	16	91	11×17.5×11	40	4
SSPF60	—	90	0/−22	127		129	18	107	11×17.5×11	45.5	4

Ds mm	Ds tolerance μm	basic torque rating dynamic C_T N·m	basic torque rating static C_{0T} N·m	basic load rating dynamic C kN	basic load rating static Co kN	allowable static moment M_{01} N·m	allowable static moment M_{02} N·m	second cross-sectional moment of inertia mm^4	cross-sectional coefficient mm^3	mass nut kg	mass shaft kg/m	size
6	0/−12	1.5	2.4	1.22	2.28	5.1	40	5.9×10	1.97×10	0.037	0.21	6
8	0	2.1	3.7	1.45	2.87	7.4	50	1.9×10^2	4.76×10	0.042	0.38	8
10	−15	4.4	8.2	2.73	5.07	18.0	116	4.61×10^2	9.22×10	0.094	0.6	10
13	0	21	39.2	2.67	4.89	13.7	109	1.38×10^3	2.13×10^2	0.1	1	13A
16	−18	60	110	6.12	11.2	46	299	2.98×10^3	3.73×10^2	0.2	1.5	16A
20	0	105	194	8.9	16.3	110	560	7.35×10^3	7.34×10^2	0.33	2.4	20A
25	−21	189	346	12.8	23.4	171	1,029	1.79×10^4	1.43×10^3	0.45	3.7	25A
30		307	439	18.6	23.2	181	1,470	3.66×10^4	2.44×10^3	0.55	5.38	30A
40	0	647	934	30.8	37.5	358	2,940	1.15×10^5	5.75×10^3	1.41	9.55	40A
50	−25	1,291	2,955	40.3	64.9	690	4,084	2.83×10^5	1.13×10^4	2.73	15.0	50A
60	0/−30	1,577	2,629	47.7	79.5	881	5,473	5.91×10^5	1.97×10^4	3.2	21.6	60A
18.2	0	83	133	7.84	11.3	63	500	5.05×10^3	5.54×10^2	0.22	2	20
23	−21	162	239	12.3	16.1	104	830	1.27×10^4	1.11×10^3	0.32	3.1	25
28		289	412	18.6	23.2	181	1,470	2.75×10^4	1.96×10^3	0.51	4.8	30
37.4	0	637	882	30.8	37.5	358	2,940	8.73×10^4	4.67×10^3	1.15	8.6	40
47	−25	1,390	3,180	46.1	74.2	696	4,400	2.16×10^5	9.21×10^3	2.1	13.1	50
56.5	0/−30	2,100	4,800	58.0	127	1,300	8,800	4.51×10^5	1.60×10^4	3.3	19	60

1kN≒102kgf 1N·m≒0.102kgf·m

www.bergab.ru Берг АБ bergab@ya.ru Тел. (495)-228-06-21, факс (495) 223-3071

www.bergab.ru Берг АБ bergab@ya.ru Тел. (495)-228-06-21, факс (495) 223-3071

SSPT TYPE

— Two Side Cut Flange Type —

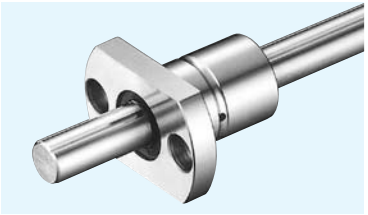

part number structure

example **SSPT 10-2-T1-436-P/CU**

- SSPT type
- nominal diameter
- number of nuts attached to one shaft
- preload symbol **blank**: standard **T1**: light
- spline shaft total length
- accuracy grade **blank**: high **P**: precision
- with special specification

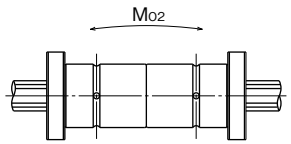

When two spline nuts are used in close contact.

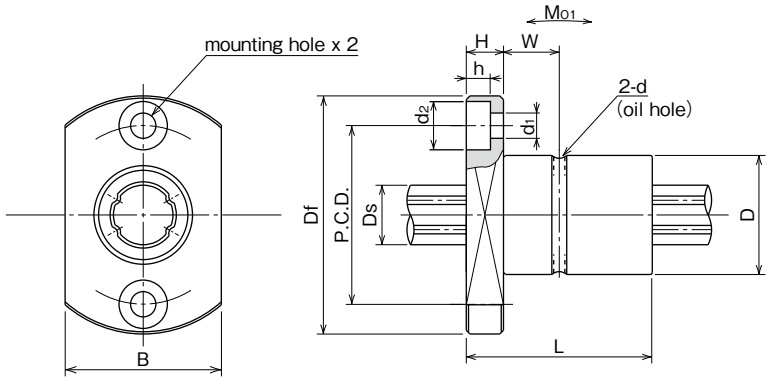

part number	major dimensions D mm	D tolerance μm	L mm	L tolerance mm	Df mm	B mm	H mm	P.C.D. mm	d1×d2×h mm	W mm	d mm
SSPT 6	14	0	25	0	30	18	5	22	3.4×6.5×3.3	7.5	1
SSPT 8	16	−11	25	−0.2	32	21	5	24	3.4×6.5×3.3	7.5	1.5
SSPT10	21	0/−13	33		42	25	6	32	4.5×8×4.4	10.5	1.5

Ds mm	Ds tolerance μm	basic torque rating dynamic CT N・m	basic torque rating static COT N・m	basic load rating dynamic C kN	basic load rating static Co kN	allowable static moment Mo1 N・m	allowable static moment Mo2 N・m	second cross-sectional moment of inertia mm4	cross-sectional coefficient mm3	mass nut kg	mass shaft kg/m	size
6	0/−12	1.5	2.4	1.22	2.28	5.1	40	5.9 ×10	1.97×10	0.029	0.21	**6**
8	0	2.1	3.7	1.45	2.87	7.4	50	1.9 ×10²	4.76×10	0.035	0.38	**8**
10	−15	4.4	8.2	2.73	5.07	18.0	116	4.61×10²	9.22×10	0.075	0.6	**10**

1kN≒102kgf 1N・m≒0.102kgf・m

www.bergab.ru Берг АБ bergab@ya.ru Тел. (495)-228-06-21, факс (495) 223-3071

www.bergab.ru Берг АБ bergab@ya.ru Тел. (495)-228-06-21, факс (495) 223-3071

SSPB Type

– Block Type –

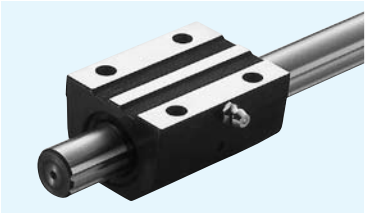

part number structure

example **SSPB 25-2-T1-436-P/CU**

- SSPB type
- nominal diameter
- number of blocks attached to one shaft
- preload symbol
  blank: standard
  T1: light
  T2: medium
- spline shaft total length
- accuracy grade
  blank: high
  P: precision
- with special specification

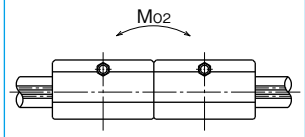

When two blocks are used in close contact.

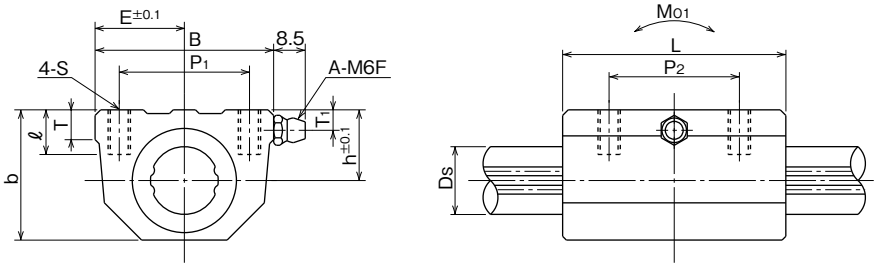

part number	major dimensions h mm	B mm	L mm	E mm	b mm	T mm	P_1 mm	P_2 mm	S	ℓ mm	T_1 mm
SSPB20	19	48	60	24	35	8	35	35	M6	12	5.5
SSPB25	22	60	70	30	41.5	10	40	40	M8	12	6
SSPB30	26	70	80	35	50	12	50	50	M8	12	7
SSPB40	32	86	100	43	63	15	60	60	M10	15	8

Ds mm	tolerance μm	basic torque rating dynamic C_T N・m	static C_{0T} N・m	basic load rating dynamic C kN	static Co kN	allowable static moment M_{01} N・m	M_{02} N・m	second cross-sectional moment of inertia mm^4	cross-sectional coefficient mm^3	mass block kg	shaft kg/m	size
18.2	0 −21	83	133	7.84	11.3	63	500	5.05×10^3	5.54×10^2	0.55	2.0	**20**
23		162	239	12.3	16.1	104	830	1.27×10^4	1.11×10^3	0.9	3.1	**25**
28		289	412	18.6	23.2	181	1,470	2.75×10^4	1.96×10^3	1.4	4.8	**30**
37.4	0/−25	637	882	30.8	37.5	358	2,940	8.73×10^4	4.67×10^3	2.5	8.6	**40**

1kN≒102kgf 1N・m≒0.102kgf・m

www.bergab.ru Берг АБ bergab@ya.ru Тел. (495)-228-06-21, факс (495) 223-3071

www.bergab.ru Берг АБ bergab@ya.ru Тел. (495)-228-06-21, факс (495) 223-3071

STANDARD BALL SPLINE

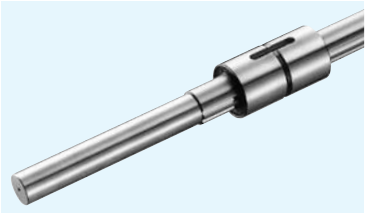

part number structure

example **SSP 10 S-2-T1-400**

- nut shape
  - **SSP**: cylindrical type
  - **SSPM**: keyless type
  - **SSPF**: flange type
  - **SSPT**: two side cut flange type
  - **SSPB**: block type
- nominal diameter
- standard spline shaft
- number of nuts attached to one shaft
- preload symbol
  - **blank**: standard
  - **T1**: light
  - **T2**: medium
- standard lengthL

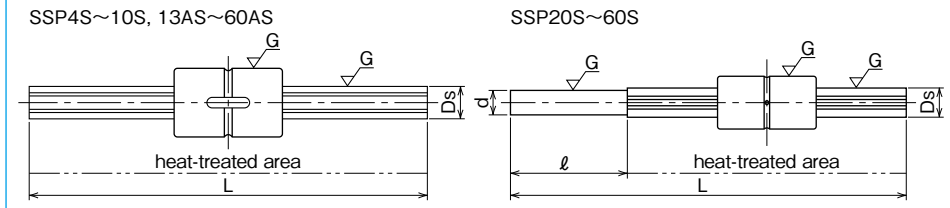

nominal diameter	Ds mm	Ds tolerance μm	d mm	d tolerance μm	ℓ mm	standard length L mm					SSP	SSPM	SSPF	SSPT	SSPB
4	4	0	—	—	—	100	150	200	300	—	○	—	—	—	—
6	6	−12	—	—	—	150	200	300	400	—	○	○	○	○	—
8	8	0	—	—	—	150	200	300	400	500	○	○	○	○	—
10	10	−15	—	—	—	200	300	400	500	600	○	○	○	○	—
13A	13	0	—	—	—	200	300	400	500	600	○	—	○	—	—
16A	16	−18	—	—	—	200	300	400	500	600	○	—	○	—	—
20A	20	0	—	—	—	300	400	500	800	1,000	○	—	○	—	—
25A	25	−21	—	—	—	300	400	500	800	1,000	○	—	○	—	—
30A	30		—	—	—	—	500	1,000	1,500	2,000	○	—	○	—	—
40A	40	0	—	—	—	—	500	1,000	1,500	2,000	○	—	○	—	—
50A	50	−25	—	—	—	—	500	1,000	1,500	2,000	○	—	○	—	—
60A	60	0/−30	—	—	—	—	500	1,000	1,500	2,000	○	—	○	—	—
20	18.2	0	15	0/−18	150	350	450	550	650	—	○	—	○	—	○
25	23	−21	20	0	150	350	450	550	650	850	○	—	○	—	○
30	28		25	−21	150	450	550	650	750	1,150	○	—	○	—	○
40	37.4	0	30		150	550	750	950	1,150	—	○	—	○	—	○
50	47	−25	40	0	150	650	850	1,150	1,350	—	○	—	○	—	—
60	56.5	0/−30	45	−25	150	650	850	1,150	1,350	—	○	—	○	—	—

- Tolerance of length L for nominal diameter sizes 4 to 10, 13A to 60A: JIS B0405 coarse grade.
- Please refer to dimension tables for nut shape and dimensions.

○ yes — none

COMMERCIAL BALL SPLINE

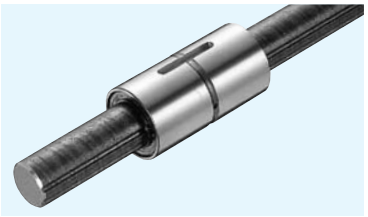

part number structure

example **SSPF 25 C-2-436/CU**

- nut shape
  - **SSP**: cylindrical type
  - **SSPF**: flange type
  - **SSPB**: block type
- nominal diameter
- commercial spline shaft
- number of nuts attached to one shaft
- spline shaft total length
- with special specification

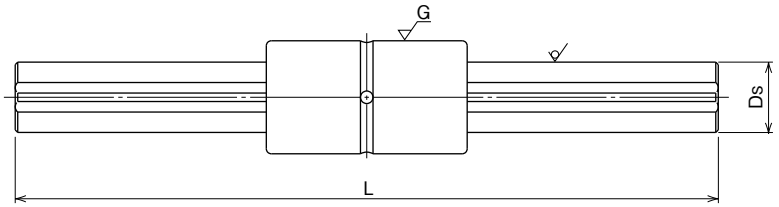

nominal diameter	Ds mm	standard length L mm						SSP	SSPF	SSPB
20	18.2	500	1,000	2,000	3,000	4,000	5,000	○	○	○
25	23	500	1,000	2,000	3,000	4,000	5,000	○	○	○
30	28	500	1,000	2,000	3,000	4,000	5,000	○	○	○
40	37.4	500	1,000	2,000	3,000	4,000	5,000	○	○	○
50	47	500	1,000	2,000	3,000	4,000	5,000	○	○	—

- Tolerance of total length and length of splined portion
  total length up to 4,000: JIS B0405 coarse grade
  total length greater than 4,000: ±5.0mm
  Please specify tolerances when required.
- Please refer to dimension tables for nut shape and dimensions.
- When a commercial shaft is used, the load rating of the nut is approximately 70% of indicated rating in the dimension tables.

○ yes — none

www.bergab.ru Берг АБ bergab@ya.ru Тел. (495)-228-06-21, факс (495) 223-3071

www.bergab.ru Берг АБ bergab@ya.ru Тел. (495)-228-06-21, факс (495) 223-3071

SPR TYPE

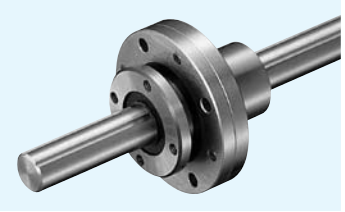

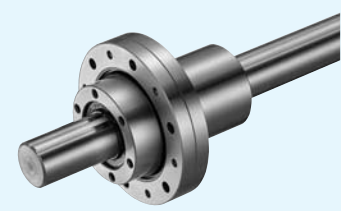

part number structure

example **SPR 25 - 2 - T1 - 436 / CU**

- SPR type
- nominal diameter
- number of nuts attached to one shaft
- preload symbol
  blank: standard
  T1: light
  T2: medium
- spline shaft total length
- with special specification

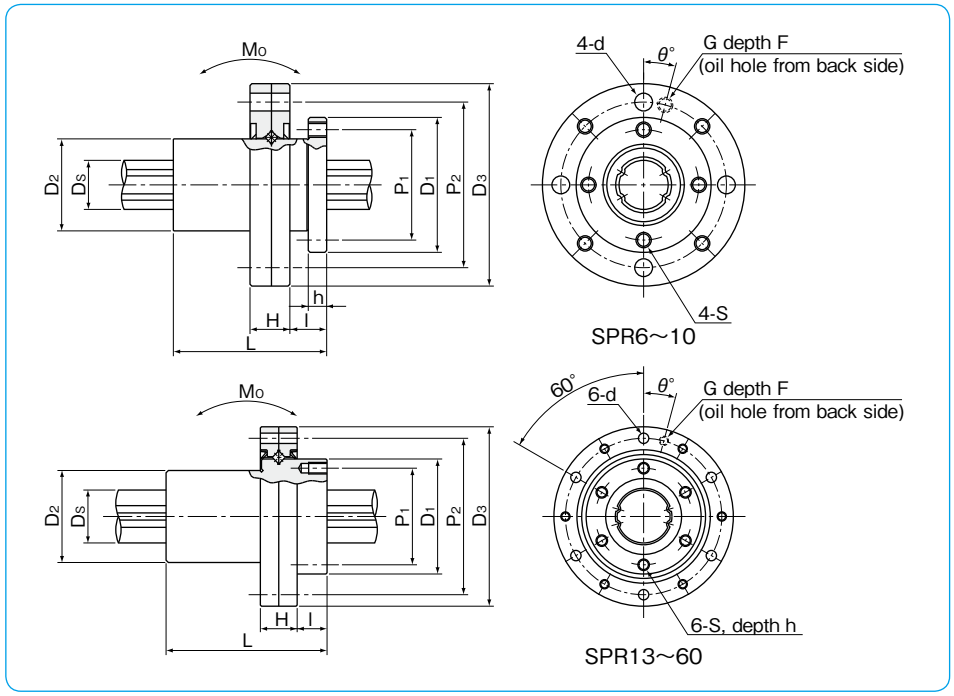

part number	major dimensions D1 mm	D1 tolerance μm	D2 mm	L mm	L tolerance mm	P1 P.C.D. mm	S	h mm	major dimensions of cross roller bearing l mm	H mm	D3 mm	D3 tolerance μm	P2 P.C.D. mm	d mm	G	F mm	θ
SPR 6	20	0 −21	13	25	0 −0.2	16	M2	2.5	5	6.5	30	0/−21	24	2.4	M3	2.6	20°
SPR 8	22		15	25		18	M2.5	3	6	6.5	33	0 −25	27	2.9	M3	2.6	20°
SPR10	27		19	33		22	M3	4	8	7	40		33	3.4	M3	2.8	20°
SPR13	29		24	36		24	M3	5	8	9	50		42	3.4	M3	3.6	15°
SPR16	36	0 −25	31	50		30	M4	6	10	11	60	0 −30	50	4.5	M3	4.4	15°
SPR20A	44		35	63		38	M4	7	12	13	72		62	4.5	M6×0.75	5.2	15°
SPR25A	55		42	71	0 −0.3	47	M5	8	13	16	82		72	4.5	M6×0.75	6.4	15°
SPR30A	61	0 −30	47	80		52	M6	10	17	17	100	0 −35	86	6.6	M6×0.75	6.8	15°
SPR40A	76		64	100		66	M6	10	23	20	120		104	9	M6×0.75	8	15°
SPR50A	92	0 −35	80	125		80	M8	13	24	22	134	0 −40	118	9	M6×0.75	8.8	15°
SPR60A	107		90	140		95	M8	13	25	25	155		137	9	M6×0.75	10	15°
SPR20	40	0 −25	34	60	0/−0.2	34	M4	7	12	13	66	0 −30	56	4.5	M6×0.75	5.2	15°
SPR25	50		40	70	0 −0.3	42	M5	8	13	16	78		68	4.5	M6×0.75	6.4	15°
SPR30	61	0 −30	47	80		52	M6	10	17	17	100	0 −35	86	6.6	M6×0.75	6.8	15°
SPR40	76		62	100		64	M6	10	23	20	120		104	9	M6×0.75	8	15°
SPR50	88	0 −35	75	112		77	M8	13	24	22	130	0 −40	114	9	M6×0.75	8.8	15°
SPR60	102		90	127		90	M8	13	25	25	150		132	9	M6×0.75	10	15°

※Please contact NB for the grease fitting and relubrication method.

spline shaft Ds mm	Ds tolerance μm	rotary ball spline basic torque rating dynamic CT N・m	static COT N・m	basic load rating dynamic C kN	static Co kN	cross roller bearing basic load rating dynamic CR kN	static COR kN	allowable static moment Mo N・m	second cross-sectional moment of inertia mm⁴	cross-sectional coefficient mm³	mass nut kg	shaft kg/m	※maximum revolutions rpm	size
6	0/−12	1.5	2.4	1.22	2.28	0.6	0.5	5.1	5.9×10	1.97×10	0.04	0.21	2,940	6
8	0 −15	2.1	3.7	1.45	2.87	1.2	1.10	7.4	1.9×10^2	4.76×10	0.05	0.38	2,580	8
10		4.4	8.2	2.73	5.07	2.4	2.45	18.0	4.61×10^2	9.22×10	0.09	0.60	2,060	10
13	0 −18	21	39.2	2.67	4.89	2.9	3.70	13.7	1.38×10^3	2.13×10^2	0.17	1.0	1,350	13
16		60	110	6.12	11.2	5.6	6.70	46	2.98×10^3	3.73×10^2	0.33	1.5	1,080	16
20	0 −21	105	194	8.9	16.3	6.55	8.79	63	7.35×10^3	7.34×10^2	0.57	2.4	890	20A
25		189	346	12.8	23.4	9.63	12.7	171	1.79×10^4	1.43×10^3	0.81	3.7	700	25A
30		307	439	18.6	23.2	11.8	17.1	181	3.66×10^4	2.44×10^3	1.19	5.38	640	30A
40	0 −25	674	934	30.8	37.5	23.0	32.3	358	1.15×10^5	5.75×10^3	2.25	9.55	510	40A
50		1,291	2,955	40.3	64.9	27.8	44.0	690	2.83×10^5	1.13×10^4	3.57	15.0	430	50A
60	0/−30	1,577	2,629	47.7	79.5	29.0	48.8	881	5.91×10^5	1.97×10^4	5.03	21.6	370	60A
18.2	0 −21	83	133	7.84	11.3	5.90	7.35	63	5.05×10^3	5.54×10^2	0.45	2.0	980	20
23		162	239	12.3	16.1	9.11	11.5	104	1.27×10^4	1.11×10^3	0.75	3.1	770	25
28		289	412	18.6	23.2	11.8	17.1	181	2.75×10^4	1.96×10^3	1.25	4.8	640	30
37.4	0 −25	637	882	30.8	37.5	22.8	32.3	358	8.73×10^4	4.67×10^3	2.30	8.6	510	40
47		1,390	3,180	46.1	74.2	27.2	42.1	696	2.16×10^5	9.21×10^3	3.10	13.1	450	50
56.5	0/−30	2,100	4,800	58.0	127.4	26.5	42.6	1,300	4.51×10^5	1.60×10^4	4.70	19	400	60

※Maximum revolutions for grease lubrication.
Contact NB for further information in case oil lubrication is required.

1kN≒102kgf　1N・m≒0.102kgf・m

www.bergab.ru Берг АБ bergab@ya.ru Тел. (495)-228-06-21, факс (495) 223-3071

www.bergab.ru Берг АБ bergab@ya.ru Тел. (495)-228-06-21, факс (495) 223-3071

SPLFS TYPE

— Two Side Cut Flange Type —

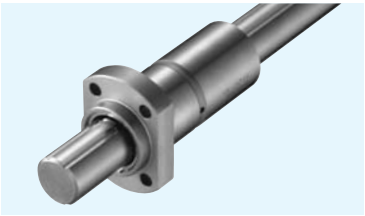

part number structure

example **SPLFS 16-2-200/CU**

- SPLFS type
- nominal diameter
- number of nuts attached to one shaft
- spline shaft total length
- with special specification

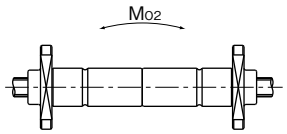

When two spline nuts are used in close contact.

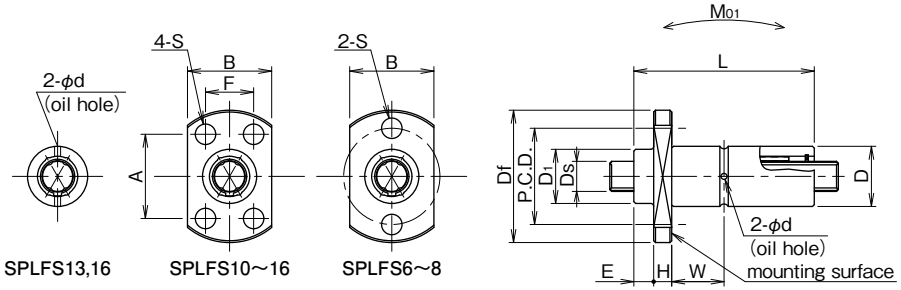

part number	maximum stroke	D		D1	L		E	Df	H	B	P.C.D.	A	F	S
				major dimensions										
	mm	mm	tolerance μm	mm	mm	tolerance mm	mm	mm	mm	mm	mm	mm	mm	mm
SPLFS 6	22	11	0 −8	10	40	0 −0.2	3.3	23	4	14	17	—	—	3.4
SPLFS 8	20	13		12.5	40		3.3	25.5	4	16	19.5	—	—	3.4
SPLFS10	28	16		15.5	50		3.3	28.5	5	20	—	18	13	3.4
SPLFS13	24	20	0 −9	19.5	50		4.8	36	5	25	—	22	17	3.4
SPLFS16	26	24		23.5	60		4.8	40	7	29	—	25	19	4.5

W	d	Ds		basic torque rating dynamic	basic torque rating static	basic load rating dynamic	basic load rating static	allowable static moment		second cross-sectional moment of inertia	cross-sectional coefficient	mass nut	mass shaft	size
mm	mm	mm	tolerance μm	C_T N・m	C_{0T} N・m	C kN	Co kN	M_{01} N・m	M_{02} N・m	mm^4	mm^3	g	kg/m	
12.7	1.2	6	0/−12	2.3	3.8	1.8	3.0	11.2	45	5.9×10	1.97×10	21.5	0.21	6
12.7	1.2	8	0	3.3	5.5	2.02	3.37	13.1	52	1.9×10^2	4.76×10	27.0	0.38	8
16.7	1.5	10	−15	6.5	10.9	3.21	5.35	25.6	102	4.61×10^2	9.22×10	47.7	0.6	10
15.2	1.5	13	0	27.6	50.7	4.15	7.6	38.8	155	1.38×10^3	2.13×10^2	75.3	1.0	13
18.2	2.0	16	−18	62.8	115	7.66	14	88.3	353	2.98×10^3	3.73×10^2	123.5	1.5	16

1kN≒102kgf 1N・m≒0.102kgf・m

www.bergab.ru Берг АБ bergab@ya.ru Тел. (495)-228-06-21, факс (495) 223-3071

SLIDE BUSH

www.bergab.ru Берг АБ bergab@ya.ru Тел. (495)-228-06-21, факс (495) 223-3071

SLIDE BUSH

The NB slide bush is a linear motion mechanism utilizing the rotational motion of ball elements. Since linear motion is obtained using a simple mechanism, the slide bush can be used in a wide variety of applications, including transportation equipment, food processing equipment, and semiconductor manufacturing equipment.

STRUCTURE AND ADVANTAGES

The outer cylinder of slide bush contains a ball retainer that is perfectly designed to control the circulation of ball elements, resulting in smooth linear motion.

Compact Machanism

The NB slide bush uses a round shaft for the guiding axis, resulting in space-saving, which allows for compact designs.

A Wide Variety of Shapes and Installation Methods

The NB slide bush is available in various types, standard, clearance-adjustable, open, flange, etc., for a various applications.

Selection According to Environment

NB slide bushes are available in standard and anti-corrosion types. Available options include steel-retainer suitable for use in harsh environments and resin retainer for low acoustic, low-cost requirement. Other options can be specified according to the application requirements.

Compatibility

The NB slide bush is fully compatible with a variety of shaft types.

Low Friction

The raceway surface is precision ground. Since the contact surface between the ball elements and the raceway surface is minimized, the NB slide bush provides low friction compared to other linear motion mechanisms.

GM Series

The GM slide bush makes efficient use of resin sub-parts making it possible to achieve an overall weight reduction of 30～50% compared with the SM slide bush. The ball return section is made of resin material, which serves for low noise operation. Also, cost-effectiveness expands the use of slide bush in many applications.

Block Type Series

Block type series is a unit of NB slide bush and a block type housing. A variety of block types are available such as precision-machined blocks, resin-made blocks, and cost-effective units, each contributes to higher accuracy, light-weight, and low-cost and design-time saving, respectively.

FIT Series

FIT series is a combination of NB slide bush and precision-machined shaft. The best-fit between slide bush and shaft achieves a smooth, high-accuracy performance meeting the customer requirements.
(see page F-16)

Figure C-1 Basic Structure of NB Slide Bush (SM, KB, SW)

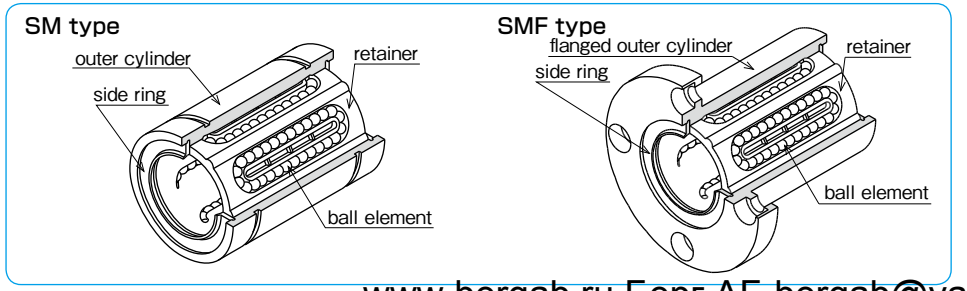

Figure C-2 Basic Structure of NB Slide Bush (GM)

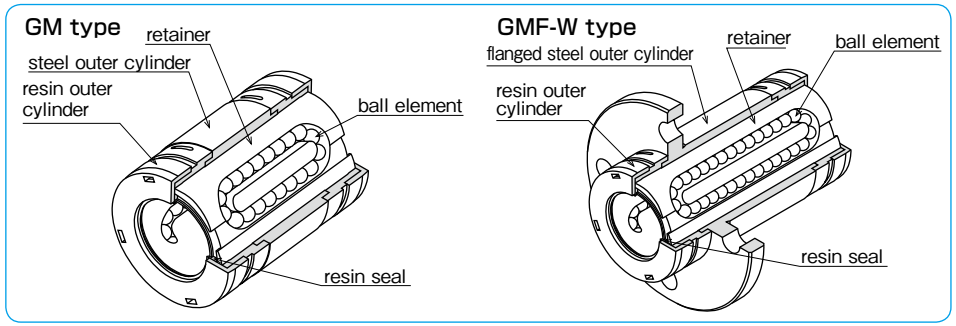

TYPES

Table C-1 Type (1)

type		standard	anti-corrosion	page
standard type		SM	SMS	C- 14
		KB	KBS	C- 68
		SW	SWS	C- 90
clearance-adjustable (AJ) type		SM-AJ	SMS-AJ	C- 16
		KB-AJ	KBS-AJ	C- 70
		SW-AJ	SWS-AJ	C- 92
open (OP) type		SM-OP	SMS-OP	C- 18
		KB-OP	KBS-OP	C- 72
		SW-OP	SWS-OP	C- 94
long type		SM-G-L	–	C- 20
double-wide type		SM-W	SMS-W	C- 22
		KB-W	KBS-W	C- 74
		SW-W	SWS-W	C- 96

www.bergab.ru Берг АБ bergab@ya.ru Тел. (495)-228-06-21, факс (495) 223-3071

www.bergab.ru Берг АБ bergab@ya.ru Тел. (495)-228-06-21, факс (495) 223-3071

Table C-2 Type (2)

type	standard	anti-corrosion	page
flange type 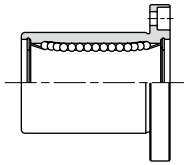	**SMF**	**SMSF**	C- 24
	KBF	**KBSF**	C- 76
	SWF	**SWSF**	C- 98
	SMK	**SMSK**	C- 26
	KBK	**KBSK**	C- 78
	SWK	**SWSK**	C-100
	SMT	**SMST**	C- 28
	KBT	**KBST**	C- 80
	SWT	**SWST**	C-102
flange type with pilot end 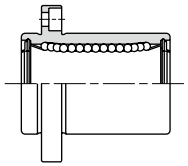	**SMF-E**	**SMSF-E**	C- 30
	SMK-E	**SMSK-E**	C- 32
	SMT-E	**SMST-E**	C- 34
long flange type 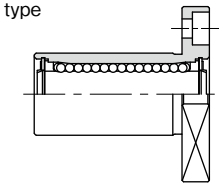	**SMK-G-L**	–	C- 36
double wide flange type 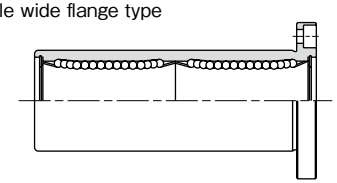	**SMF-W**	**SMSF-W**	C- 38
	KBF-W	**KBSF-W**	C- 82
	SWF-W	**SWSF-W**	C-104
	SMK-W	**SMSK-W**	C- 40
	KBK-W	**KBSK-W**	C- 84
	SWK-W	**SWSK-W**	C-106
	SMT-W	**SMST-W**	C- 42
center mount flange type 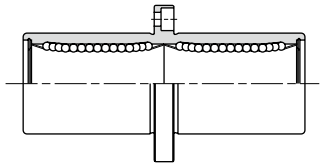	**SMFC**	**SMSFC**	C- 44
	KBFC	**KBSFC**	C- 86
	SWFC	**SWSFC**	C-108
	SMKC	**SMSKC**	C- 46
	KBKC	**KBSKC**	C- 88
	SWKC	**SWSKC**	C-110
	SMTC	**SMSTC**	C- 48
double-wide pilot end flange type 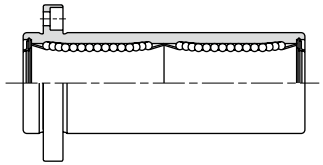	**SMF-W-E**	**SMSF-W-E**	C- 50
	SMK-W-E	**SMSK-W-E**	C- 52
	SMT-W-E	**SMST-W-E**	C- 54

Table C-3 Type (3)

type	standard	anti-corrosion	page
triple wide flange type 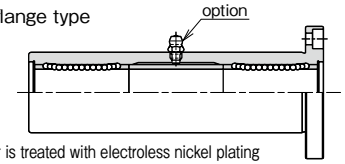 ※ Outer cylinder is treated with electroless nickel plating	**TRF**	–	C- 56
	TRK	–	C- 58
triple-wide intermediate position flange type 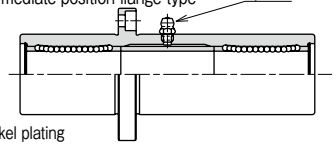 ※ Outer cylinder is treated with electroless nickel plating	**TRFC**	–	C- 60
	TRKC	–	C- 62
triple-wide pilot end flange type 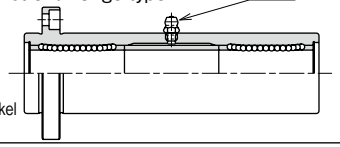 ※ Outer cylinder is treated with electroless nickel plating	**TRF-E**	–	C- 64
	TRK-E	–	C- 66

Table C-4 Type (4) GM Series

type	standard	page
GM/GW single type 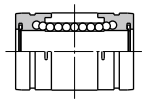	**GM**	C- 112
	GW	C-126
GM double-wide type 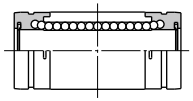	**GM-W**	C-113
GM double-wide flange type 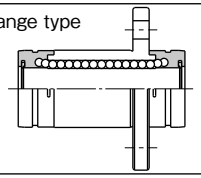	**GMF-W**	C-114
	GMK-W	C-116
	GMT-W	C-118
GM double-wide pilot end flange type 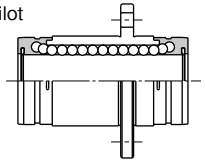	**GMF-W-E**	C-120
	GMK-W-E	C-122
	GMT-W-E	C-124

www.bergab.ru Берг АБ bergab@ya.ru Тел. (495)-228-06-21, факс (495) 223-3071

www.bergab.ru Берг АБ bergab@ya.ru Тел. (495)-228-06-21, факс (495) 223-3071

BLOCK SERIES

SMA・AK・SMB・SWA Type
This type is the most commonly used standard type. The housing is made of aluminum alloy. The wide (W) type is also available for SMA and AK types.

SMJ ・ SWJ Type
Clearance-adjustment is achieved by creating a slit on the SMA/SWA type housing. Less clearance between block and shaft results in higher positioning accuracy by tightening the adjustment screw.

RB ・RBW Type
The housing is made of ABS resin for light-weight and low-cost. Inside is a standard slide bush of a resin retainer type with seals.

SMP Type
The housing has a self-aligning feature. This feature will absorb inaccuracy of the installation base so that a smooth movement is expected.

SME・SMD・SWD Type
Open type housing allows a support from below so that a deflection of the shaft is minimized for high loading or long-stroke applications. The wide(W) type is also available for SME type.

CE・CD Type
This type is a unit of block(s), shaft, and support rail that contributes to a total cost reduction. The maximum length is 2,000mm for the support rail and for the shaft the maximum length is 4,500mm.

Metric Series

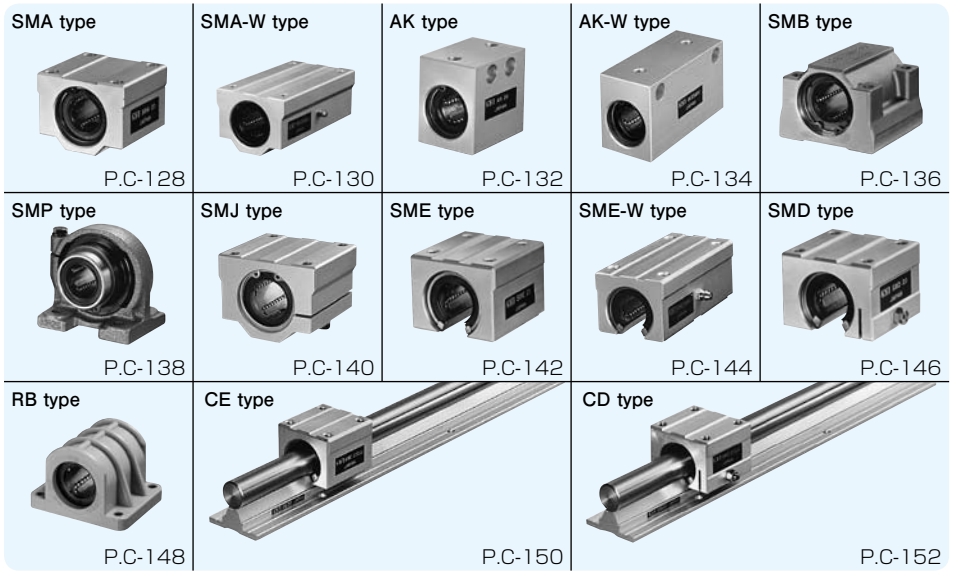

Inch Series

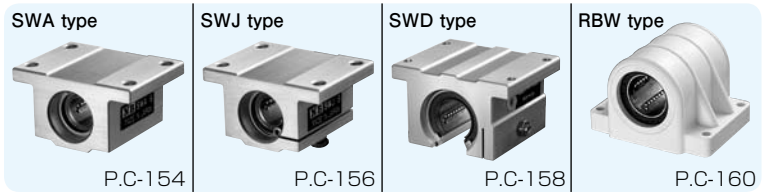

SPECIFICATIONS

Series
The NB slide bush is available in three primary dimensional series, each with different dimensions and tolerances depending on the location of use. Please select the series that is most appropriate for your location.

Table C-5 Series and Use Location

series		location			
		Japan	Asia	Europe	North America
metric	SM	◎	◎	○	○
	GM				
	KB	○	○	◎	○
inch	SW	○	○	○	◎

◎ generally used ○ rarely used

Allowable Load
NB slide bushes are categorized into three functional types depending on the number and location of retainers: single, double, and triple. Table C-6 shows load ratings and static moment in comparison. The single type uses only one retainer, so when a moment load is to be applied, the double or triple type is recommended.

Table C-6 Load Comparison

type	basic dynamic load rating	basic static load rating	allowable static moment
single	1	1	1
long	1.3	1.8	approx. 4
GM-W	1.6	2	approx. 4
SM double	1.6	2	approx. 6
triple	1.6	2	approx.21

※ The single type is designated as "1" for comparison purposes.

Material
The outer cylinder of standard type is made of bearing steel and the outer cylinder of anti-corrosion type is made of Martensitic stainless steel. The retainer is available in steel (stainless steel for anti-corrosion), and resin for low acoustic operation. The steel retainer is made of one plate (seamless type).

Table C-7 Operating Environment Temperature

material		temperature range
outer cylinder	retainer	
steel	steel	−20℃～110℃
	resin	−20℃～ 80℃
stainless	steel	−20℃～140℃*
	resin	−20℃～ 80℃

* If a seal is used in the stainless steel slide bush, the temperature is up to 120℃. Please contact NB if a temperature range exceeds 140℃.

Seal
The seals prevent dust from entering the slide bush in order to retain the motion accuracy, resulting in a long life time. The UU type is a standard option that has seals on both sides. The U type has a seal on one side only and is available for the standard, clearance adjustable, and open types. Nitril rubber, which has low wear and good sealing characteristics, is used as the seal material.
* Resin seals are used for GM series.

Figure C-3 Seal Profile

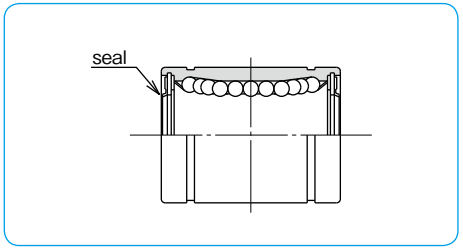

www.bergab.ru Берг АБ bergab@ya.ru Тел. (495)-228-06-21, факс (495) 223-3071

www.bergab.ru Берг АБ bergab@ya.ru Тел. (495)-228-06-21, факс (495) 223-3071

LIFE CALCULATION

Since ball elements are used as the rolling element in the NB slide bush, the following equation is used to calculate the travel life.

$$L=\left(\frac{f_H \cdot f_T \cdot f_C}{f_W} \cdot \frac{C}{P}\right)^3 \cdot 50$$

L: rated life (km) f_H: hardness coefficient
f_T: temperature coefficient f_C: contact coefficient
f_W: applied load coefficient C: basic dynamic load rating (N)
P: applied load (N)
*Refer to page Eng-5 for the coefficients.

If the stroke distance and number of strokes per unit time are constant, the life time is calculated using the following equation.

$$L_h=\frac{L \cdot 10^3}{2 \cdot \ell_S \cdot n_1 \cdot 60}$$

L_h: life time (hr) ℓ_S: stroke length (m)
L: rated life (km) n_1: number of cycles per minute (cpm)

LOAD RATING FOR OPEN TYPE SLIDE BUSH

For the open type slide bush an opening is provided to allow the shaft to be supported from underneath. In case a load is constantly applied in the direction of the opening (for example, being used with a vertical shaft or an overhang loading is applied), the load rating decreases due to less number of loaded rows of ball elements. (Table C-8) Therefore, the load rating must be calibrated at the time of design based on the direction of the loading.

Table C-8 Direction of Load and Basic Static Load Rating

part number	SM10G~16G-OP KB10G~16G-OP SW 8G~10G-OP SME (D) 10G~16G CE (D) 16	SM20 (G) -OP KB20 (G) -OP SW12 (G) -OP SME (D) 20 CE (D) 20	SM25 (G) ~100-OP KB25 (G) ~80-OP SW16 (G) ~64-OP SME (D) 25~30 CE (D) 25~30	SM120,150-OP
loading from above	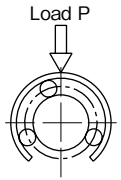	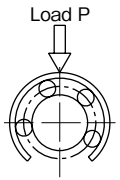	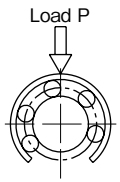	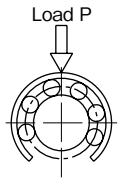
	C	C	C	C
loading from below	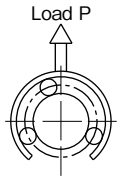	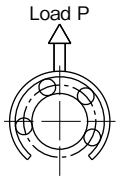	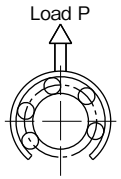	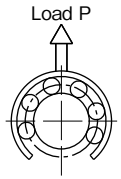
	0.64C	0.54C	0.57C	0.35C

※ Excluding all the 3-row steel retainer types. Please contact NB in case of 3-row steel retainer.

MOUNTING

Examples of Mounting methods are shown in Figures C-4 ~7.

Figure C-4 Standard Type

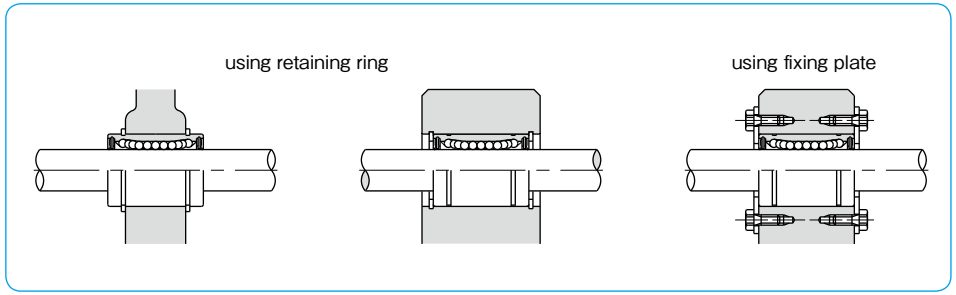

Figure C-5 Clearance Adjustable Type

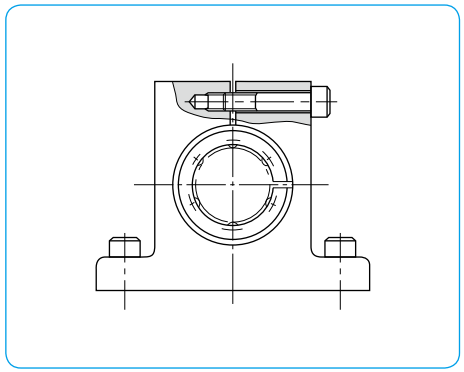

Figure C-6 Open Type

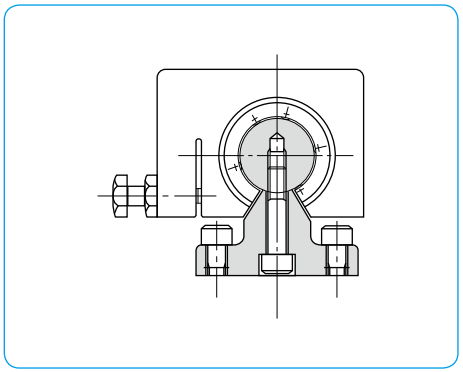

Figure C-7 Flange Type

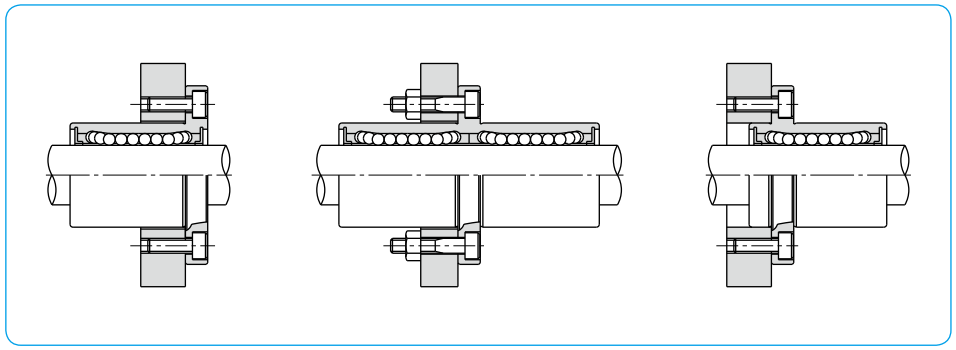

www.bergab.ru Берг АБ bergab@ya.ru Тел. (495)-228-06-21, факс (495) 223-3071

www.bergab.ru Берг АБ bergab@ya.ru Тел. (495)-228-06-21, факс (495) 223-3071

Fit

The normal clearance fit listed in Table C-9 is generally selected as a shaft outer diameter tolerance for the NB slide bush. The transition fit is selected for a higher accuracy by reducing clearance between slide bush and shaft. Matching bush and shaft (FIT series) is also available for customer's specified clearance. Please be cautious not to apply excess preloading with clearance adjustable and open types. Please keep pre-loading within the maximum radial clearance listed in the dimension table. The flange-type bush is generally inserted into an installation bore, which is slightly larger than the outer cylinder. However, if the outer cylinder is used as the pilot, H7 tolerance is recommended for housing.
The recommended clearances for the flange type are listed in Table C-10.

Table C-9 Recommended Fit

series	accuracy grade	shaft		housing	
		clearance fit	transition fit	clearance fit	transition fit
SM	high	g6	h6	H7	J7
	precision(P)	g5	h5	H6	J6
SM-G-L	high	g6	—	H7	—
SM-W	high	g6	—	H7	—
KB	high	h6	j6	H7	J7
KB-W	high	h6	—	H7	—
SW	high	g6	h6	H7	J7
	precision(P)	g5	h5	H6	J6
SW-W	high	g6	—	H7	—
GM	high	g6	h6	H7	—
GM-W	high	g6	—	H7	—

Table C-10 Recommended Fit (Flange Type)

series	shaft	
	clearance fit	transition fit
SMF	g6	h6
SMK-G-L	g6	—
SMF-W	g6	—
TRF	g6	—
KBF	h6	j6
KBF-W	h6	—
SWF	g6	h6
SWF-W	g6	—
GMF-W	g6	—

Notes on Installation

When inserting a slide bush into a housing, carefully insert it by using a jig to apply a uniform pushing force at the end of the outer cylinder, as illustrated in Figure C-8. Motion performance may be diminished if an excessive force is applied to the resin portion of the outer cylinder, the side-ring, or the seal.
Ensure that all burrs are removed from the shaft and carefully install the bush by aligning it with the center of the bore. Excessive force may drop out the ball elements during insertion.
When two or more shafts are used, the parallelism of the shafts will greatly affect the motion characteristics and life of the slide bush. Please check the parallelism by moving the slide bush back and forth the length of stroke to check for freedom of movement before final fixing of the shaft.
Please refer to page F-3 for shaft specifications.

Figure C-8 Insertion of Slide Bush

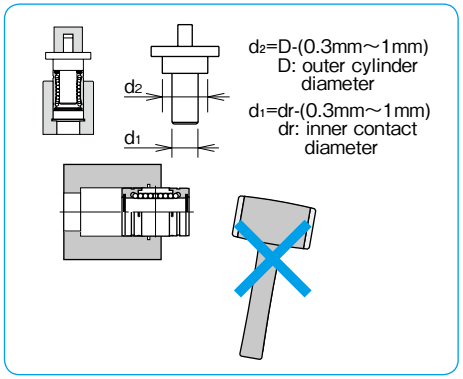

GM Standard Type

Please avoid a tension load when retaining rings are used for installation.

Figure C-9 Installation of GM Standard Type

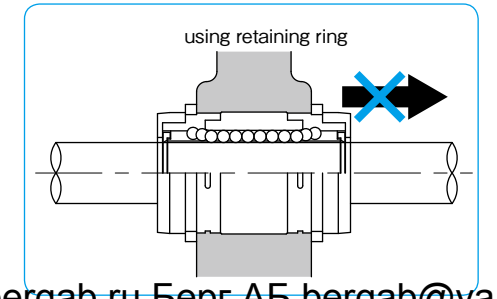

GM Flange Type

The flange of GM type has a reference plane on one side only as Figure C-10a, please do not use the other side as a reference plane. In case of using the pilot-end flange type, as Figure C-10b shows, both sides can be used as a reference plane. H7 is recommended for the housing bore tolerance.

Figure C-10 Installation of GM Flange type

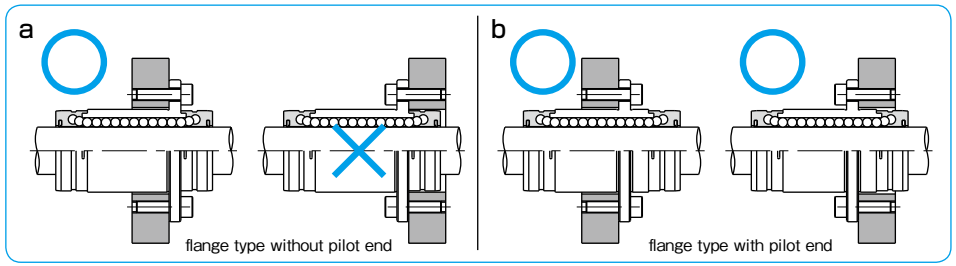

LUBRICATION

It is important to lubricate the slide bush for an accurate operation and for a long life. Anti-rust oil is applied to NB slide bush prior to shipment. The NB selected anti-rust oil has a little effect on the lubricant, however, please apply lubricant after cleaning the slide bush by, for example, kerosene, etc.

Grease Lubricant

Prior to usage, please apply grease, then re-lubricate periodically according to the operating conditions. (Lithium soap-based grease is recommended.) Re-lubrication can be done by directly applying grease inside the ball bush or by using a grease fitting as Figure C-11 shows.
A special low dust generating grease is optional for clean room application, please refer to page Eng-39.

Figure C-11 Grease Fitting

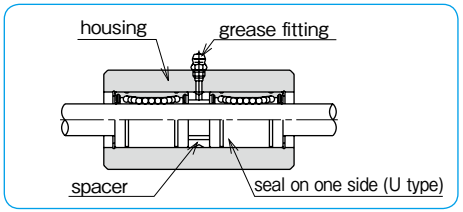

Oil Lubricant

Prior to usage, please apply oil directly to the shaft surface or by using an oil hole as Figure C-12 shows. Turbine oil (ISO standard VG32-68) is recommended.
Oil holes can be machined (see Figure C-12) in the center portion of the outer cylinder. Please contact NB for oil hole specification.

Figure C-12 Oil Hole -Specification-

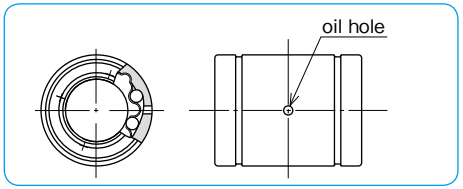

DUST PREVENTION

A smooth ball circulation is hindered by dust or foreign particles inside the slide bush. Seals on both sides is a standard option for the NB slide bush, however, in a harsh environment it is necessary to attach bellows or protective covers.

Figure C-13 Example of Dust Prevention

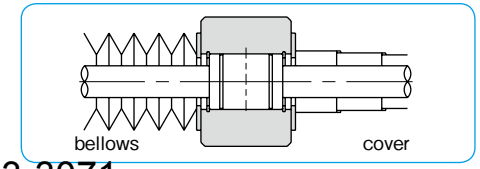

www.bergab.ru Берг АБ bergab@ya.ru Тел. (495)-228-06-21, факс (495) 223-3071

www.bergab.ru Берг АБ bergab@ya.ru Тел. (495)-228-06-21, факс (495) 223-3071

NOTES ON HANDLING

The NB slide bush is a precision component, please handle with care to maintain its high motion accuracy.
The slide bush is designed for linear motion, so that for applications in which a combination of linear and rotational motion is a requirement, let us recommend Stroke Bush, Slide Rotary Bush, or Rotary Ball Spline.

Figure C-14 Direction of Motion

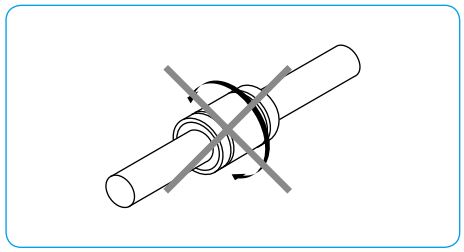

OTHER SPECIFICATIONS

●Flange Type Slide Bush with Surface-Treatment
The following surface treatments are available as standard option:

SK	electroless nickel plating
LF	low temperature black chrome treatment with fluoride coating
SB	black oxide (excluding anti-corrosion type)
SC	industrial chrome plating

* Please contact NB for the thickness of coating and the resulting outer diameter tolerance.

●Special Specifications
Please contact NB for more information on surface treatment, oil hole (Figure C-12), flange mounting hole (Figure C-15), etc.

Figure C-15 Examples of Special Installation Hole

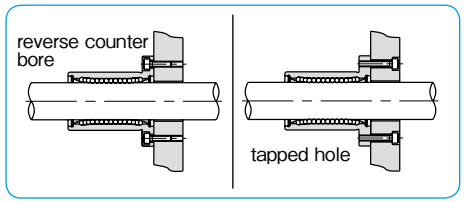

FELT SEAL

A felt seal FLM strengthens lubrication characteristics and extends re-lubrication period of the NB slide bush.

Figure C-16 Felt Seal

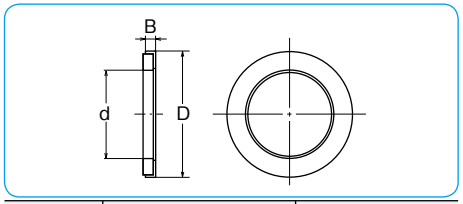

part number	major dimensions(mm) d	D	B	applicable slide bush
FLM 6	6	12	2	SM 6／GM 6
FLM 8	8	15	2	SM 8／GM 8
FLM 10	10	19	3	SM 10／GM10
FLM 12	12	21	3	SM 12／GM12
FLM 13	13	23	3	SM 13／GM13
FLM 16	16	28	4	SM 16／GM16
FLM 20	20	32	4	SM 20／GM20
FLM 25	25	40	5	SM 25／GM25
FLM 30	30	45	5	SM 30／GM30
FLM 35	35	52	5	SM 35
FLM 40	40	60	5	SM 40
FLM 50	50	80	10	SM 50
FLM 60	60	90	10	SM 60
FLM 80	80	120	10	SM 80
FLM100	100	150	10	SM100

Felt Seal Installation

The felt seal does not work as a retaining ring. Figure C-17 shows how to install the felt seal.

Figure C-17 Example of Felt Seal Installation

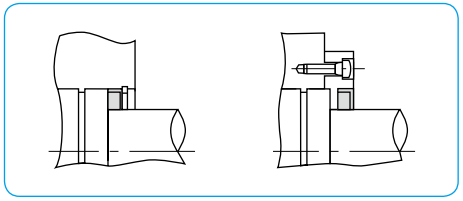

ACCURACY

The accuracy of CE/CD-type support rails are measured as shown in Figure C-18.

Figure C-18 Accuracy Measurement

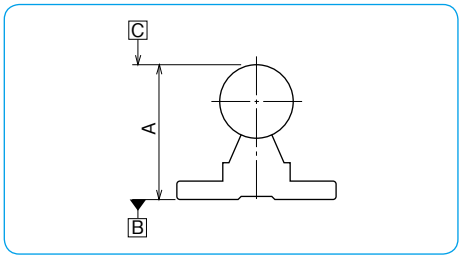

Figure C-19 Accuracy of CE/CD-type Support Rails

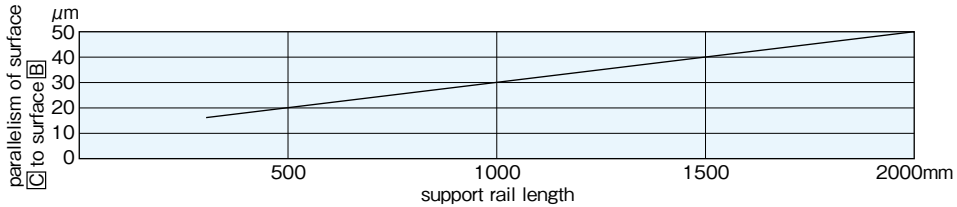

NOTES ON USAGE OF BLOCK SERIES

Reference Surface

The NB slide units have a reference surface as shown in Figure C-20. Accuracy is achieved by simply pushing the reference surface against the shoulder of the installation surface. (Excluding RB and SMP types)

Clearance Adjustment

On the clearance adjustment type please avoid excessive preloading. In the same manner please do not apply excessive torque when tightening the screws.

Mounting of RB Type

RB type has a resin housing. Table C-11 shows proper torque values.

Recommended Fit

For clearance fit please use a shaft with g6 tolerance and for transition fit a shaft with h6 tolerance. (Excluding adjustable-clearance and open types)

Special Installation Case of SMJ Type

Special mouting holes will be required for installations such as Figure C-21 shows. Please contact NB for special requirements.

Figure C-20 Reference Surface

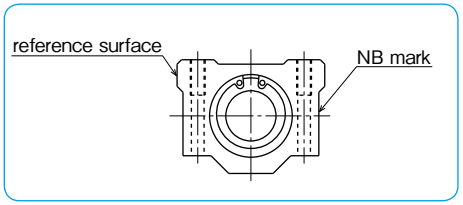

Table C-11 Recommended Torque for RB Type

part number	mounting screw	torque N・m
RB10～16	M4	1.8
RB20	M5	5.3

Figure C-21 Special Installation of SMJ Type

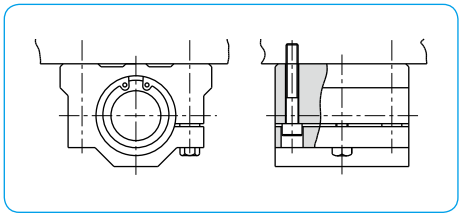

www.bergab.ru Берг АБ bergab@ya.ru Тел. (495)-228-06-21, факс (495) 223-3071

www.bergab.ru Берг АБ bergab@ya.ru Тел. (495)-228-06-21, факс (495) 223-3071

SM TYPE
– Standard Type –

part number structure

example **SMS 25 G UU-P**

specification
SM: standard
SMS: anti-corrosion

inner contact diameter (dr)

retainer material
blank: standard/steel
anti-corrosion/stainless steel
G: resin

seal
blank: without seal
U: seal on one side
UU: seals on both sides

accuracy grade
blank: high
P: precision

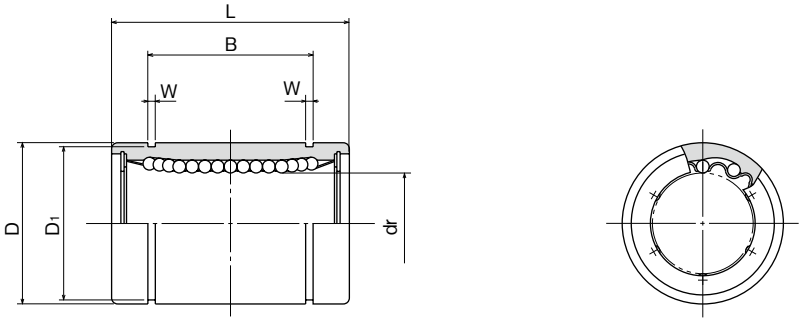

part number				number of ball circuits	dr			major dimensions D	
standard		anti-corrosion				tolerance μm			
steel retainer	resin retainer	stainless retainer	resin retainer		mm	precision	high	mm	tolerance μm
SM 3	SM 3G	SMS 3	SMS 3G	4	3	0 / −5	0 / −8	7	0 / −9
SM 4	SM 4G	SMS 4	SMS 4G	4	4			8	
SM 5	SM 5G	SMS 5	SMS 5G	4	5			10	
SM 6	SM 6G	SMS 6	SMS 6G	4	6	0 / −6	0 / −9	12	0 / −11
SM 8s	SM 8sG	SMS 8s	SMS 8sG	4	8			15	
SM 8	SM 8G	SMS 8	SMS 8G	4	8			15	
SM 10	SM10G	SMS10	SMS10G	4	10			19	0 / −13
SM 12	SM12G	SMS12	SMS12G	4	12			21	
SM 13	SM13G	SMS13	SMS13G	4	13			23	
SM 16	SM16G	SMS16	SMS16G	4	16			28	
SM 20	SM20G	SMS20	SMS20G	5	20	0 / −7	0 / −10	32	0 / −16
SM 25	SM25G	SMS25	SMS25G	6	25			40	
SM 30	SM30G	SMS30	SMS30G	6	30			45	
SM 35	SM35G	SMS35	SMS35G	6	35	0 / −8	0 / −12	52	0 / −19
SM 40	SM40G	SMS40	SMS40G	6	40			60	
SM 50	SM50G	SMS50	SMS50G	6	50			80	
SM 60	SM60G	SMS60	SMS60G	6	60	0 / −9	0 / −15	90	0 / −22
SM 80	SM80G	SMS80	SMS80G	6	80			120	
SM100	–	–	–	6	100	0 / −10	0 / −20	150	0 / −25
SM120	–	–	–	8	120			180	
SM150	–	–	–	8	150	0/−13	0/−25	210	0/−29

L		B		W	D1	eccentricity		radial clearance (maximum)	basic load rating		mass	shaft diameter
									dynamic	static		
mm	tolerance mm	mm	tolerance mm	mm	mm	precision μm	high μm	μm	C N	Co N	g	mm
10	0 / −0.12	–	–	–	–	4	8	− 3	69	105	1.4	3
12		–	–	–	–				88	127	2.0	4
15		10.2	0 / −0.2	1.1	9.6				167	206	4.0	5
19	0 / −0.2	13.5		1.1	11.5	8	12		206	265	8.5	6
17		11.5		1.1	14.3				176	216	11	8
24		17.5		1.1	14.3				274	392	17	8
29		22		1.3	18			− 4	372	549	36	10
30		23		1.3	20				510	784	42	12
32		23		1.3	22				510	784	49	13
37		26.5		1.6	27			− 6	774	1,180	76	16
42		30.5		1.6	30.5	10	15		882	1,370	100	20
59	0 / −0.3	41	0 / −0.3	1.85	38				980	1,570	240	25
64		44.5		1.85	43			− 8	1,570	2,740	270	30
70		49.5		2.1	49	12	20		1,670	3,140	425	35
80		60.5		2.1	57			−10	2,160	4,020	654	40
100		74		2.6	76.5			−13	3,820	7,940	1,700	50
110		85		3.15	86.5	17	25		4,700	10,000	2,000	60
140	0 / −0.4	105.5	0 / −0.4	4.15	116			−20	7,350	16,000	4,520	80
175		125.5		4.15	145	20	30		14,100	34,800	8,600	100
200		158.6		4.15	175			−25	16,400	40,000	15,000	120
240		170.6		5.15	204	25	40		21,100	54,300	20,250	150

1N≒0.102kgf

www.bergab.ru Берг АБ bergab@ya.ru Тел. (495)-228-06-21, факс (495) 223-3071

www.bergab.ru Берг АБ bergab@ya.ru Тел. (495)-228-06-21, факс (495) 223-3071

SM-AJ TYPE

– Clearance Adjustable Type –

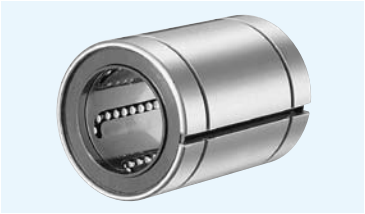

part number structure

example **SMS 25 G UU - AJ**

- **SMS**: specification — **SM**: standard; **SMS**: anti-corrosion
- **25**: inner contact diameter (dr)
- **G**: retainer material — **blank**: standard/steel; anti-corrosion/stainless steel; **G**: resin
- **UU**: seal — **blank**: without seal; **U**: seal on one side; **UU**: seals on both sides
- **AJ**: clearance-adjustable

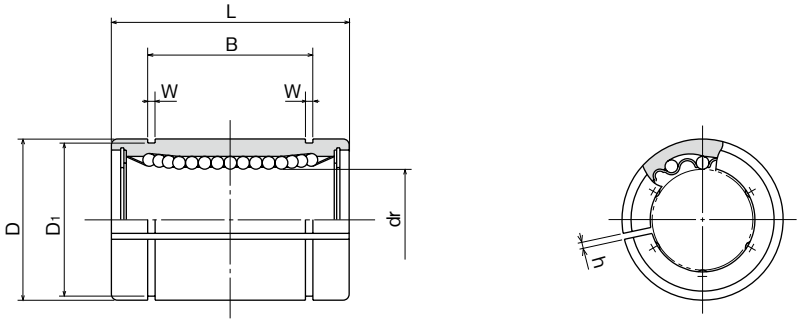

part number: standard, steel retainer	part number: standard, resin retainer	part number: anti-corrosion, stainless retainer	part number: anti-corrosion, resin retainer	number of ball circuits	dr mm	dr tolerance* μm	D mm	D tolerance* μm
–	SM 6G-AJ	–	SMS 6G-AJ	4	6	0 −9	12	0 −11
–	SM 8sG-AJ	–	SMS 8sG-AJ	4	8		15	
–	SM 8G-AJ	–	SMS 8G-AJ	4	8		15	
–	SM10G-AJ	–	SMS10G-AJ	4	10		19	0 −13
SM 12-AJ	SM12G-AJ	SMS12-AJ	SMS12G-AJ	4	12		21	
SM 13-AJ	SM13G-AJ	SMS13-AJ	SMS13G-AJ	4	13		23	
SM 16-AJ	SM16G-AJ	SMS16-AJ	SMS16G-AJ	4	16		28	
SM 20-AJ	SM20G-AJ	SMS20-AJ	SMS20G-AJ	5	20	0 −10	32	0 −16
SM 25-AJ	SM25G-AJ	SMS25-AJ	SMS25G-AJ	6	25		40	
SM 30-AJ	SM30G-AJ	SMS30-AJ	SMS30G-AJ	6	30		45	
SM 35-AJ	SM35G-AJ	SMS35-AJ	SMS35G-AJ	6	35	0 −12	52	0 −19
SM 40-AJ	SM40G-AJ	SMS40-AJ	SMS40G-AJ	6	40		60	
SM 50-AJ	SM50G-AJ	SMS50-AJ	SMS50G-AJ	6	50		80	
SM 60-AJ	SM60G-AJ	SMS60-AJ	SMS60G-AJ	6	60	0 −15	90	0 −22
SM 80-AJ	SM80G-AJ	–	–	6	80		120	
SM100-AJ	–	–	–	6	100	0 −20	150	0 −25
SM120-AJ	–	–	–	8	120		180	
SM150-AJ	–	–	–	8	150	0/−25	210	0/−29

* Accuracy is measured prior to machining clearance slit.

L mm	L tolerance mm	B mm	B tolerance mm	W mm	D1 mm	h mm	eccentricity* μm	basic load rating dynamic C N	basic load rating static Co N	mass g	shaft diameter mm
19	0 −0.2	13.5	0 −0.2	1.1	11.5	1	12	206	265	7.5	6
17		11.5		1.1	14.3	1		176	216	10	8
24		17.5		1.1	14.3	1		274	392	14.7	8
29		22		1.3	18	1		372	549	29	10
30		23		1.3	20	1.5		510	784	41	12
32		23		1.3	22	1.5		510	784	48	13
37		26.5		1.6	27	1.5		774	1,180	75	16
42		30.5		1.6	30.5	1.5	15	882	1,370	98	20
59	0 −0.3	41	0 −0.3	1.85	38	2		980	1,570	237	25
64		44.5		1.85	43	2.5		1,570	2,740	262	30
70		49.5		2.1	49	2.5	20	1,670	3,140	420	35
80		60.5		2.1	57	3		2,160	4,020	640	40
100		74		2.6	76.5	3		3,820	7,940	1,680	50
110		85		3.15	86.5	3	25	4,700	10,000	1,980	60
140	0 −0.4	105.5	0 −0.4	4.15	116	3		7,350	16,000	4,400	80
175		125.5		4.15	145	3	30	14,100	34,800	8,540	100
200		158.6		4.15	175	3		16,400	40,000	14,900	120
240		170.6		5.15	204	3	40	21,100	54,300	20,150	150

1N≒0.102kgf

www.bergab.ru Берг АБ bergab@ya.ru Тел. (495)-228-06-21, факс (495) 223-3071

www.bergab.ru Берг АБ bergab@ya.ru Тел. (495)-228-06-21, факс (495) 223-3071

SM-OP TYPE

– Open Type –

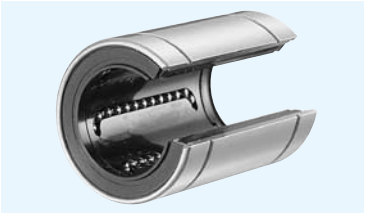

part number structure

example **SMS 25 G UU-OP**

- **SMS**: specification
  - **SM**: standard
  - **SMS**: anti-corrosion
- **25**: inner contact diameter (dr)
- **G**: retainer material
  - **blank**: standard/steel
  - anti-corrosion/stainless steel
  - **G**: resin
- **UU**: seal
  - **blank**: without seal
  - **U**: seal on one side
  - **UU**: seals on both sides
- **OP**: open type

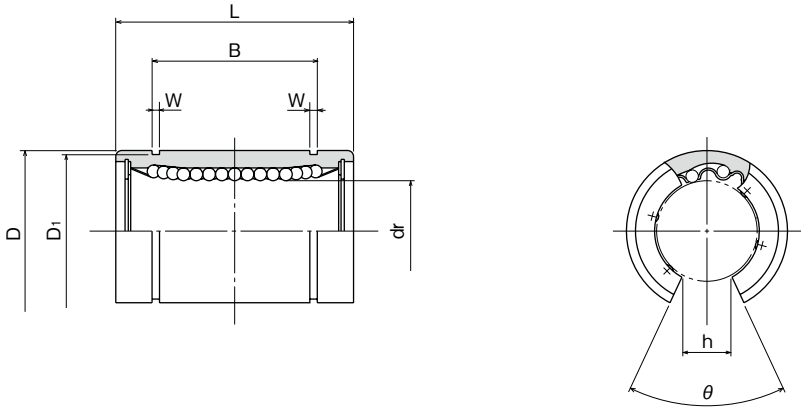

part number				number of ball circuits	major dimensions			
standard		anti-corrosion			dr		D	
steel retainer	resin retainer	stainless retainer	resin retainer		mm	tolerance* μm	mm	tolerance* μm
–	SM10G-OP	–	SMS10G-OP	3	10	0 / −9	19	0 / −13
SM 12-OP	SM12G-OP	SMS12-OP	SMS12G-OP	3	12		21	
SM 13-OP	SM13G-OP	SMS13-OP	SMS13G-OP	3	13		23	
SM 16-OP	SM16G-OP	SMS16-OP	SMS16G-OP	3	16		28	
SM 20-OP	SM20G-OP	SMS20-OP	SMS20G-OP	4	20	0 / −10	32	0 / −16
SM 25-OP	SM25G-OP	SMS25-OP	SMS25G-OP	5	25		40	
SM 30-OP	SM30G-OP	SMS30-OP	SMS30G-OP	5	30		45	
SM 35-OP	SM35G-OP	SMS35-OP	SMS35G-OP	5	35	0 / −12	52	0 / −19
SM 40-OP	SM40G-OP	SMS40-OP	SMS40G-OP	5	40		60	
SM 50-OP	SM50G-OP	SMS50-OP	SMS50G-OP	5	50		80	
SM 60-OP	SM60G-OP	SMS60-OP	SMS60G-OP	5	60	0 / −15	90	0 / −22
SM 80-OP	SM80G-OP	–	–	5	80		120	
SM100-OP	–	–	–	5	100	0 / −20	150	0 / −25
SM120-OP	–	–	–	6	120		180	
SM150-OP	–	–	–	6	150	0/−25	210	0/−29

* Accuracy is measured prior to machining open slit.

L		B		W	D1	h	θ	eccentricity*	basic load rating		mass	shaft diameter
									dynamic	static		
mm	tolerance mm	mm	tolerance mm	mm	mm	mm		μm	C N	Co N	g	mm
29	0 / −0.2	22	0 / −0.2	1.3	18	6.8	80°	12	372	549	23	10
30		23		1.3	20	8	80°		510	784	32	12
32		23		1.3	22	9	80°		510	784	37	13
37		26.5		1.6	27	11	80°		774	1,180	58	16
42		30.5		1.6	30.5	11	60°	15	882	1,370	79	20
59	0 / −0.3	41	0 / −0.3	1.85	38	12	50°		980	1,570	203	25
64		44.5		1.85	43	15	50°		1,570	2,740	228	30
70		49.5		2.1	49	17	50°	20	1,670	3,140	355	35
80		60.5		2.1	57	20	50°		2,160	4,020	546	40
100		74		2.6	76.5	25	50°		3,820	7,940	1,420	50
110		85		3.15	86.5	30	50°	25	4,700	10,000	1,650	60
140	0 / −0.4	105.5	0 / −0.4	4.15	116	40	50°		7,350	16,000	3,750	80
175		125.5		4.15	145	50	50°	30	14,100	34,800	7,200	100
200		158.6		4.15	175	85	80°		16,400	40,000	11,600	120
240		170.6		5.15	204	105	80°	40	21,100	54,300	15,700	150

1N≒0.102kgf

www.bergab.ru Берг АБ bergab@ya.ru Тел. (495)-228-06-21, факс (495) 223-3071

www.bergab.ru Берг АБ bergab@ya.ru Тел. (495)-228-06-21, факс (495) 223-3071

SM-G-L TYPE

— Long Type —

part number structure

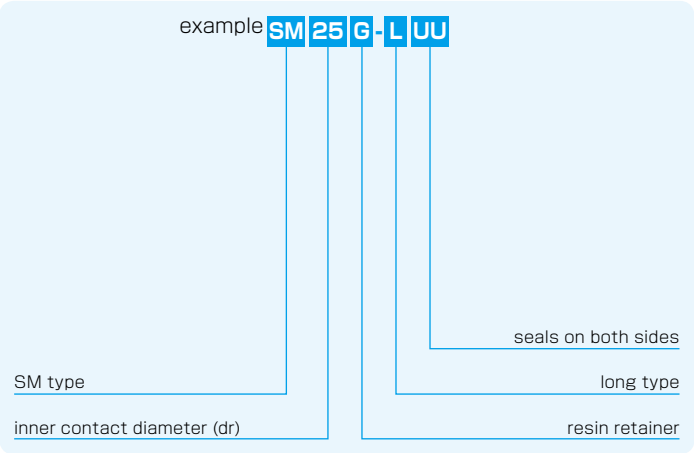

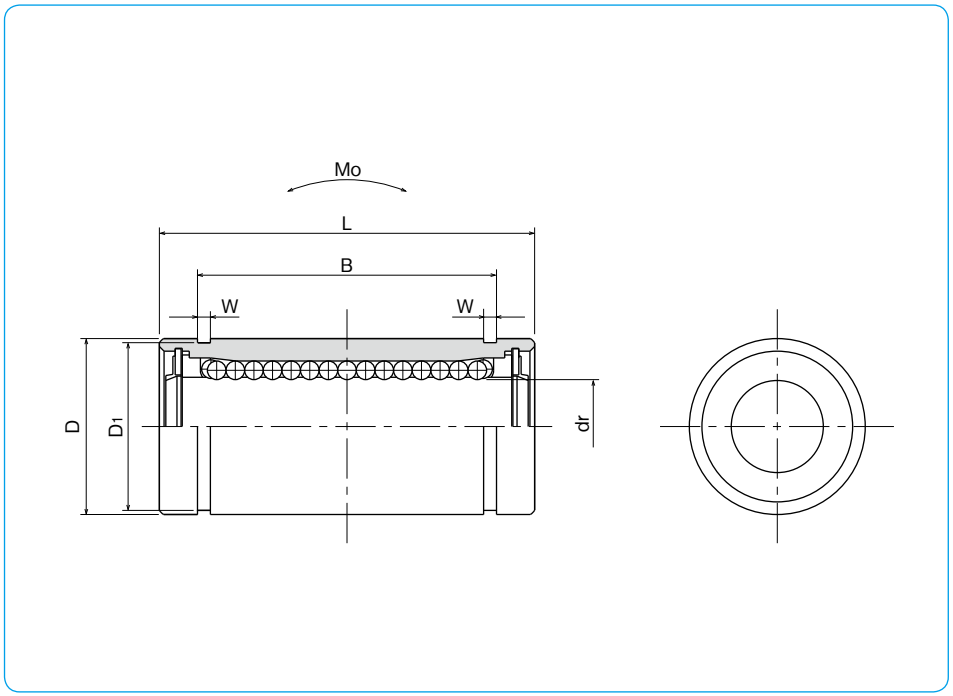

part number*	number of ball circuits	dr mm	dr tolerance μm	D mm	D tolerance μm	L mm	L tolerance mm	B mm	B tolerance mm
SM 6G-LUU	4	6	0 −10	12	0 −13	26	0 −0.3	20.5	0 −0.2
SM 8G-LUU	4	8		15		32		25.5	
SM10G-LUU	4	10		19	0 −16	39		32	
SM12G-LUU	4	12		21		41		34	
SM13G-LUU	4	13		23		45		36	
SM16G-LUU	4	16		28		53		42	
SM20G-LUU	5	20	0 −12	32	0 −19	59		47.5	
SM25G-LUU	6	25		40		83		69	0 −0.3
SM30G-LUU	6	30		45		90		75	

*UU type is standard.

major dimensions

W mm	D_1 mm	eccentricity μm	basic load rating dynamic C N	basic load rating static Co N	allowable static moment Mo N・m	mass g	shaft diameter mm
1.1	11.5	15	262	476	1.15	10	6
1.1	14.3		352	615	1.94	19	8
1.3	18		493	1,005	3.98	38	10
1.3	20		637	1,430	6.26	43	12
1.3	22		682	1,560	7.68	62	13
1.6	27		1,039	2,350	13.2	99	16
1.6	30.5	20	1,160	2,740	17.9	125	20
1.85	38		1,300	2,960	27.2	315	25
1.85	43		2,160	5,880	61.3	347	30

1N≒0.102kgf 1N・m≒0.102kgf・m

www.bergab.ru Берг АБ bergab@ya.ru Тел. (495)-228-06-21, факс (495) 223-3071

www.bergab.ru Берг АБ bergab@ya.ru Тел. (495)-228-06-21, факс (495) 223-3071

SM-W TYPE

– Double-Wide Type –

part number structure

example **SMS 25 G W UU**

- specification
  SM: standard
  SMS: anti-corrosion
- inner contact diameter (dr)
- retainer material
  blank: standard/steel
  anti-corrosion/stainless steel
  G: resin
- double-wide type
- seal
  blank: without seal
  UU: seals on both sides

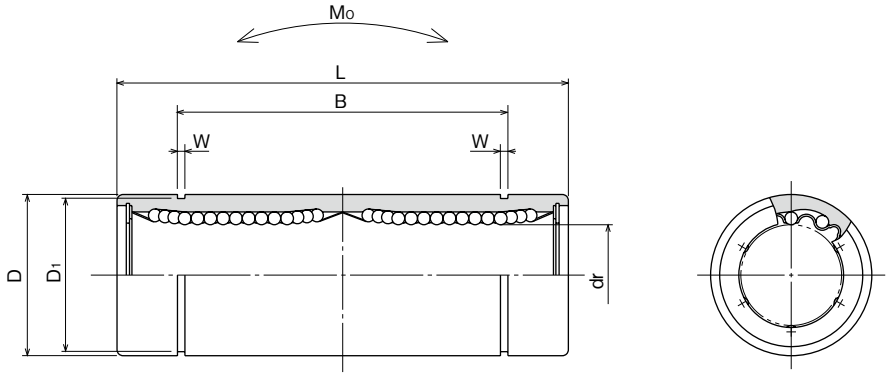

part number				number of ball circuits	major dimensions			
standard		anti-corrosion			dr		D	
steel retainer	resin retainer	stainless retainer	resin retainer		mm	tolerance μm	mm	tolerance μm
SM 3W	SM 3GW	SMS 3W	SMS 3GW	4	3	0 −10	7	0 −11
SM 4W	SM 4GW	SMS 4W	SMS 4GW	4	4		8	
SM 5W	SM 5GW	SMS 5W	SMS 5GW	4	5		10	
SM 6W	SM 6GW	SMS 6W	SMS 6GW	4	6		12	0 −13
SM 8W	SM 8GW	SMS 8W	SMS 8GW	4	8		15	
SM10W	SM10GW	SMS10W	SMS10GW	4	10		19	0 −16
SM12W	SM12GW	SMS12W	SMS12GW	4	12		21	
SM13W	SM13GW	SMS13W	SMS13GW	4	13		23	
SM16W	SM16GW	SMS16W	SMS16GW	4	16		28	
SM20W	SM20GW	SMS20W	SMS20GW	5	20	0 −12	32	0 −19
SM25W	SM25GW	SMS25W	SMS25GW	6	25		40	
SM30W	SM30GW	SMS30W	SMS30GW	6	30		45	
SM35W	SM35GW	SMS35W	SMS35GW	6	35	0 −15	52	0 −22
SM40W	SM40GW	SMS40W	SMS40GW	6	40		60	
SM50W	SM50GW	SMS50W	SMS50GW	6	50		80	
SM60W	SM60GW	SMS60W	SMS60GW	6	60	0/−20	90	0/−25

L		B		W	D1	eccentricity	basic load rating		allowable	mass	shaft diameter
							dynamic	static	static moment		
mm	tolerance mm	mm	tolerance mm	mm	mm	μm	C N	Co N	Mo N・m	g	mm
19	0 −0.3	–	–	–	–	10	138	210	0.51	3.2	3
23		–	–	–	–		176	254	0.63	4.8	4
28		20.4	0 −0.3	1.1	9.6		265	412	1.38	11	5
35		27		1.1	11.5	15	323	530	2.18	16	6
45		35		1.1	14.3		431	784	4.31	31	8
55		44		1.3	18		588	1,100	7.24	62	10
57		46		1.3	20		813	1,570	10.9	80	12
61		46		1.3	22		813	1,570	11.6	90	13
70		53		1.6	27		1,230	2,350	19.7	145	16
80		61		1.6	30.5	20	1,400	2,740	26.8	180	20
112	0 −0.4	82	0 −0.4	1.85	38		1,560	3,140	43.4	440	25
123		89		1.85	43		2,490	5,490	82.8	480	30
135		99		2.1	49	25	2,650	6,270	110	795	35
151		121		2.1	57		3,430	8,040	147	1,170	40
192		148		2.6	76.5		6,080	15,900	397	3,100	50
209		170		3.15	86.5	30	7,550	20,000	530	3,500	60

1N≒0.102kgf 1N・m≒0.102kgf・m

www.bergab.ru Берг АБ bergab@ya.ru Тел. (495)-228-06-21, факс (495) 223-3071

www.bergab.ru Берг АБ bergab@ya.ru Тел. (495)-228-06-21, факс (495) 223-3071

SMF TYPE

– Round Flange Type –

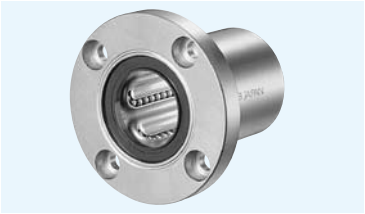

part number structure

example **SMSF 25 G UU-SK**

specification
SMF: standard
SMSF: anti-corrosion

inner contact diameter (dr)

retainer material
blank: standard/steel
anti-corrosion/stainless steel
G: resin

seal
blank: without seal
UU: seals on both sides

outer cylinder
surface treatment
blank: no surface treatment
SK: electroless nickel plating
LF: low temperature black chrome treatment with fluoride coating
SB: black oxide (not available on anti-corrosion type)
SC: industrial chrome plating

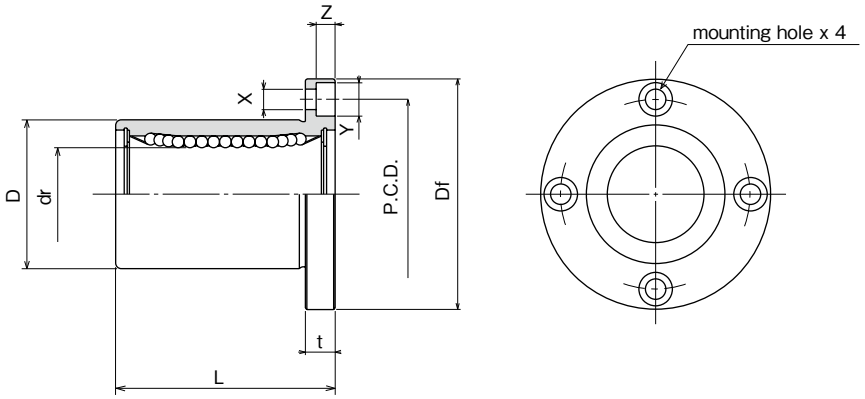

part number				number of ball circuits	major dimensions				
standard		anti-corrosion			dr		D		L
steel retainer	resin retainer	stainless retainer	resin retainer		mm	tolerance μm	mm	tolerance μm	±0.3 mm
SMF 6	SMF 6G	SMSF 6	SMSF 6G	4	6	0 −9	12	0 −13	19
SMF 8s	SMF 8sG	SMSF 8s	SMSF 8sG	4	8		15		17
SMF 8	SMF 8G	SMSF 8	SMSF 8G	4	8		15		24
SMF 10	SMF10G	SMSF10	SMSF10G	4	10		19	0 −16	29
SMF 12	SMF12G	SMSF12	SMSF12G	4	12		21		30
SMF 13	SMF13G	SMSF13	SMSF13G	4	13		23		32
SMF 16	SMF16G	SMSF16	SMSF16G	4	16		28		37
SMF 20	SMF20G	SMSF20	SMSF20G	5	20	0 −10	32	0 −19	42
SMF 25	SMF25G	SMSF25	SMSF25G	6	25		40		59
SMF 30	SMF30G	SMSF30	SMSF30G	6	30		45		64
SMF 35	SMF35G	SMSF35	SMSF35G	6	35	0 −12	52	0 −22	70
SMF 40	SMF40G	SMSF40	SMSF40G	6	40		60		80
SMF 50	SMF50G	SMSF50	SMSF50G	6	50		80		100
SMF 60	SMF60G	SMSF60	SMSF60G	6	60	0 −15	90	0 −25	110
SMF 80	–	–	–	6	80		120		140
SMF100	–	–	–	6	100	0/−20	150	0/−29	175

Df mm	t mm	flange P.C.D. mm	X×Y×Z mm	eccentricity μm	perpendicularity μm	basic load rating dynamic C N	static Co N	mass g	shaft diameter mm
28	5	20	3.5×6×3.1	12	12	206	265	24	6
32	5	24	3.5×6×3.1			176	216	32	8
32	5	24	3.5×6×3.1			274	392	37	8
40	6	29	4.5×7.5×4.1			372	549	72	10
42	6	32	4.5×7.5×4.1			510	784	76	12
43	6	33	4.5×7.5×4.1			510	784	88	13
48	6	38	4.5×7.5×4.1			774	1,180	120	16
54	8	43	5.5×9×5.1	15	15	882	1,370	180	20
62	8	51	5.5×9×5.1			980	1,570	340	25
74	10	60	6.6×11×6.1			1,570	2,740	470	30
82	10	67	6.6×11×6.1	20	20	1,670	3,140	650	35
96	13	78	9×14×8.1			2,160	4,020	1,060	40
116	13	98	9×14×8.1			3,820	7,940	2,200	50
134	18	112	11×17×11.1	25	25	4,700	10,000	3,000	60
164	18	142	11×17×11.1			7,350	16,000	5,800	80
200	20	175	14×20×13.1	30	30	14,100	34,800	10,600	100

1N≒0.102kgf

www.bergab.ru Берг АБ bergab@ya.ru Тел. (495)-228-06-21, факс (495) 223-3071

www.bergab.ru Берг АБ bergab@ya.ru Тел. (495)-228-06-21, факс (495) 223-3071

SMK TYPE

– Square Flange Type –

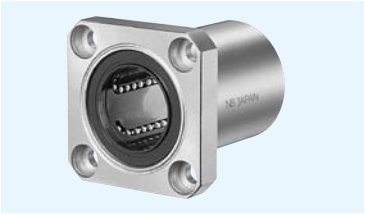

part number structure

example **SMSK 25 G UU - SK**

specification
SMK: standard
SMSK: anti-corrosion

inner contact diameter (dr)

retainer material
blank: standard/steel
anti-corrosion/stainless steel
G: resin

seal
blank: without seal
UU: seals on both sides

outer cylinder
surface treatment
blank: no surface treatment
SK: electroless nickel plating
LF: low temperature black chrome treatment with fluoride coating
SB: black oxide (not available on anti-corrosion type)
SC: industrial chrome plating

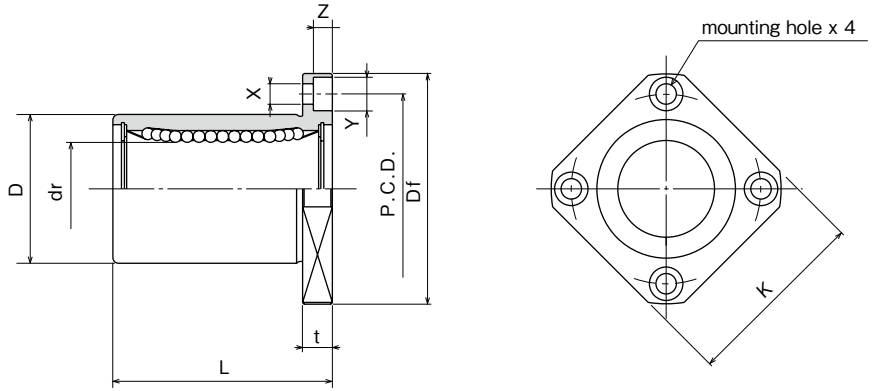

part number				number of ball circuits	major dimensions				
standard		anti-corrosion			dr		D		L
steel retainer	resin retainer	stainless retainer	resin retainer		mm	tolerance μm	mm	tolerance μm	±0.3 mm
SMK 6	SMK 6G	SMSK 6	SMSK 6G	4	6	0 −9	12	0 −13	19
SMK 8s	SMK 8sG	SMSK 8s	SMSK 8sG	4	8		15		17
SMK 8	SMK 8G	SMSK 8	SMSK 8G	4	8		15		24
SMK 10	SMK10G	SMSK10	SMSK10G	4	10		19	0 −16	29
SMK 12	SMK12G	SMSK12	SMSK12G	4	12		21		30
SMK 13	SMK13G	SMSK13	SMSK13G	4	13		23		32
SMK 16	SMK16G	SMSK16	SMSK16G	4	16		28		37
SMK 20	SMK20G	SMSK20	SMSK20G	5	20	0 −10	32	0 −19	42
SMK 25	SMK25G	SMSK25	SMSK25G	6	25		40		59
SMK 30	SMK30G	SMSK30	SMSK30G	6	30		45		64
SMK 35	SMK35G	SMSK35	SMSK35G	6	35	0 −12	52	0 −22	70
SMK 40	SMK40G	SMSK40	SMSK40G	6	40		60		80
SMK 50	SMK50G	SMSK50	SMSK50G	6	50		80		100
SMK 60	SMK60G	SMSK60	SMSK60G	6	60	0 −15	90	0 −25	110
SMK 80	–	–	–	6	80		120		140
SMK100	–	–	–	6	100	0/−20	150	0/−29	175

flange					eccentricity	perpendicularity	basic load rating		mass	shaft diameter
Df mm	K mm	t mm	P.C.D. mm	X×Y×Z mm	μm	μm	dynamic C N	static Co N	g	mm
28	22	5	20	3.5×6×3.1	12	12	206	265	18	6
32	25	5	24	3.5×6×3.1			176	216	24	8
32	25	5	24	3.5×6×3.1			274	392	29	8
40	30	6	29	4.5×7.5×4.1			372	549	52	10
42	32	6	32	4.5×7.5×4.1			510	784	57	12
43	34	6	33	4.5×7.5×4.1			510	784	72	13
48	37	6	38	4.5×7.5×4.1			774	1,180	104	16
54	42	8	43	5.5×9×5.1	15	15	882	1,370	145	20
62	50	8	51	5.5×9×5.1			980	1,570	300	25
74	58	10	60	6.6×11×6.1			1,570	2,740	375	30
82	64	10	67	6.6×11×6.1	20	20	1,670	3,140	560	35
96	75	13	78	9×14×8.1			2,160	4,020	880	40
116	92	13	98	9×14×8.1			3,820	7,940	2,000	50
134	106	18	112	11×17×11.1	25	25	4,700	10,000	2,560	60
164	136	18	142	11×17×11.1			7,350	16,000	5,300	80
200	170	20	175	14×20×13.1	30	30	14,100	34,800	9,900	100

1N≒0.102kgf

www.bergab.ru Берг АБ bergab@ya.ru Тел. (495)-228-06-21, факс (495) 223-3071

www.bergab.ru Берг АБ bergab@ya.ru Тел. (495)-228-06-21, факс (495) 223-3071

SMT TYPE

— Two Side Cut Flange Type —

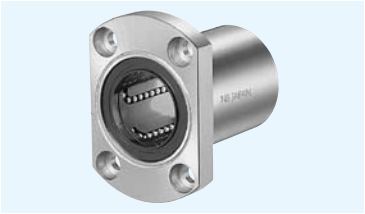

part number structure

example **SMST 25 G UU - SK**

specification
SMT: standard
SMST: anti-corrosion

inner contact diameter (dr)

retainer material
blank: standard/steel
anti-corrosion/stainless steel
G: resin

seals on both sides

outer cylinder
surface treatment
blank: no surface treatment
SK: electroless nickel plating
LF: low temperature black chrome treatment with fluoride coating
SB: black oxide (not available on anti-corrosion type)
SC: industrial chrome plating

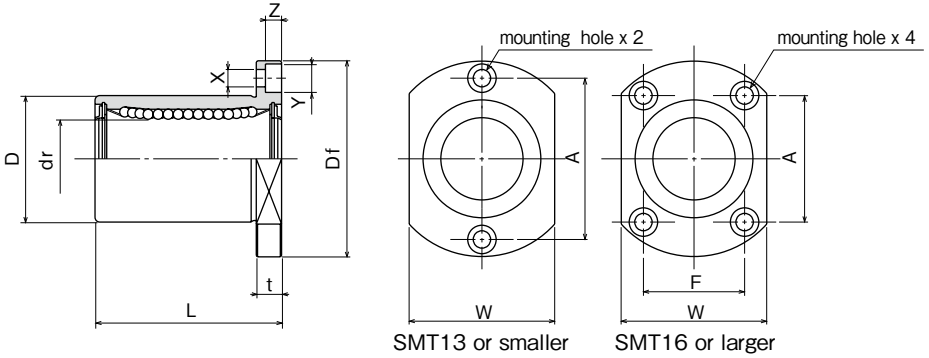

part number* standard steel retainer	standard resin retainer	anti-corrosion stainless retainer	anti-corrosion resin retainer	number of ball circuits	major dimensions dr mm	dr tolerance μm	D mm	D tolerance μm	L ±0.3 mm
SMT 6UU	SMT 6GUU	SMST 6UU	SMST 6GUU	4	6	0 −9	12	0 −13	19
SMT 8UU	SMT 8GUU	SMST 8UU	SMST 8GUU	4	8		15		24
SMT10UU	SMT10GUU	SMST10UU	SMST10GUU	4	10		19	0 −16	29
SMT12UU	SMT12GUU	SMST12UU	SMST12GUU	4	12		21		30
SMT13UU	SMT13GUU	SMST13UU	SMST13GUU	4	13		23		32
SMT16UU	SMT16GUU	SMST16UU	SMST16GUU	4	16		28		37
SMT20UU	SMT20GUU	SMST20UU	SMST20GUU	5	20	0 −10	32	0 −19	42
SMT25UU	SMT25GUU	SMST25UU	SMST25GUU	6	25		40		59
SMT30UU	SMT30GUU	SMST30UU	SMST30GUU	6	30		45		64

* UU type is standard.

flange Df mm	W mm	t mm	A mm	F mm	X×Y×Z mm	eccentricity μm	perpendicularity μm	basic load rating dynamic C N	static Co N	mass g	shaft diameter mm
28	18	5	20	—	3.5×6×3.1	12	12	206	265	21	6
32	21	5	24	—	3.5×6×3.1			274	392	33	8
40	25	6	29	—	4.5×7.5×4.1			372	549	64	10
42	27	6	32	—	4.5×7.5×4.1			510	784	68	12
43	29	6	33	—	4.5×7.5×4.1			510	784	81	13
48	34	6	31	22	4.5×7.5×4.1			774	1,180	112	16
54	38	8	36	24	5.5×9×5.1	15	15	882	1,370	167	20
62	46	8	40	32	5.5×9×5.1			980	1,570	325	25
74	51	10	49	35	6.6×11×6.1			1,570	2,740	388	30

1N≒0.102kgf

www.bergab.ru Берг АБ bergab@ya.ru Тел. (495)-228-06-21, факс (495) 223-3071

www.bergab.ru Берг АБ bergab@ya.ru Тел. (495)-228-06-21, факс (495) 223-3071

SMF-E TYPE

– Round Flange Type with Pilot End –

part number structure

example **SMSF 25 G UU - E - SK**

- **SMSF**: specification
  - **SMF**: standard
  - **SMSF**: anti-corrosion
- **25**: inner contact diameter (dr)
- **G**: retainer material
  - **blank**: standard/steel
  - anti-corrosion/stainless steel
  - **G**: resin
- **UU**: seals on both sides
- **E**: with pilot end
- **SK**: outer cylinder surface treatment
  - **blank**: no surface treatment
  - **SK**: electroless nickel plating
  - **LF**: low temperature black chrome treatment with fluoride coating
  - **SB**: black oxide (not available on anti-corrosion type)
  - **SC**: industrial chrome plating

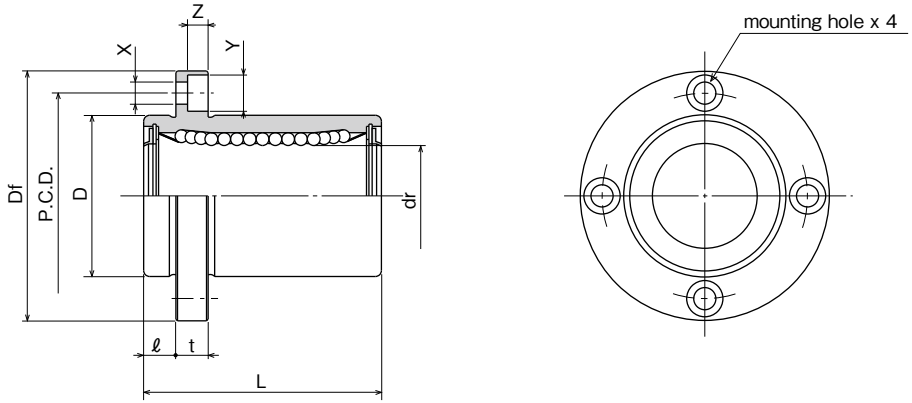

part number* standard steel retainer	standard resin retainer	anti-corrosion stainless retainer	anti-corrosion resin retainer	number of ball circuits	major dimensions dr mm	dr tolerance μm	D mm	D tolerance μm	L ±0.3 mm
SMF 6UU-E	SMF 6GUU-E	SMSF 6UU-E	SMSF 6GUU-E	4	6	0 −9	12	0 −13	19
SMF 8UU-E	SMF 8GUU-E	SMSF 8UU-E	SMSF 8GUU-E	4	8		15		24
SMF10UU-E	SMF10GUU-E	SMSF10UU-E	SMSF10GUU-E	4	10		19	0 −16	29
SMF12UU-E	SMF12GUU-E	SMSF12UU-E	SMSF12GUU-E	4	12		21		30
SMF13UU-E	SMF13GUU-E	SMSF13UU-E	SMSF13GUU-E	4	13		23		32
SMF16UU-E	SMF16GUU-E	SMSF16UU-E	SMSF16GUU-E	4	16		28		37
SMF20UU-E	SMF20GUU-E	SMSF20UU-E	SMSF20GUU-E	5	20	0 −10	32	0 −19	42
SMF25UU-E	SMF25GUU-E	SMSF25UU-E	SMSF25GUU-E	6	25		40		59
SMF30UU-E	SMF30GUU-E	SMSF30UU-E	SMSF30GUU-E	6	30		45		64
SMF35UU-E	SMF35GUU-E	–	–	6	35	0 −12	52	0 −22	70
SMF40UU-E	SMF40GUU-E	–	–	6	40		60		80
SMF50UU-E	SMF50GUU-E	–	–	6	50		80		100
SMF60UU-E	SMF60GUU-E	–	–	6	60	0/−15	90	0/−25	110

* UU type is standard.

flange ℓ mm	Df mm	t mm	P.C.D. mm	X×Y×Z mm	eccentricity μm	perpendicularity μm	basic load rating dynamic C N	static Co N	mass g	shaft diameter mm
5	28	5	20	3.5×6×3.1	12	12	206	265	24	6
5	32	5	24	3.5×6×3.1			274	392	37	8
6	40	6	29	4.5×7.5×4.1			372	549	72	10
6	42	6	32	4.5×7.5×4.1			510	784	76	12
6	43	6	33	4.5×7.5×4.1			510	784	88	13
6	48	6	38	4.5×7.5×4.1			774	1,180	120	16
8	54	8	43	5.5×9×5.1	15	15	882	1,370	180	20
8	62	8	51	5.5×9×5.1			980	1,570	340	25
10	74	10	60	6.6×11×6.1			1,570	2,740	470	30
10	82	10	67	6.6×11×6.1	20	20	1,670	3,140	650	35
13	96	13	78	9×14×8.1			2,160	4,020	1,060	40
13	116	13	98	9×14×8.1			3,820	7,940	2,200	50
18	134	18	112	11×17×11.1	25	25	4,700	10,000	3,000	60

1N≒0.102kgf

www.bergab.ru Берг АБ bergab@ya.ru Тел. (495)-228-06-21, факс (495) 223-3071

www.bergab.ru Берг АБ bergab@ya.ru Тел. (495)-228-06-21, факс (495) 223-3071

SMK-E TYPE

– Square Flange Type with Pilot End –

part number structure

example **SMSK 25 G UU - E - SK**

- SMSK: specification
  - **SMK**: standard
  - **SMSK**: anti-corrosion
- 25: inner contact diameter (dr)
- G: retainer material
  - **blank**: standard/steel
  - anti-corrosion/stainless steel
  - **G**: resin
- UU: seals on both sides
- E: with pilot end
- SK: outer cylinder surface treatment
  - **blank**: no surface treatment
  - **SK**: electroless nickel plating
  - **LF**: low temperature black chrome treatment with fluoride coating
  - **SB**: black oxide (not available on anti-corrosion type)
  - **SC**: industrial chrome plating

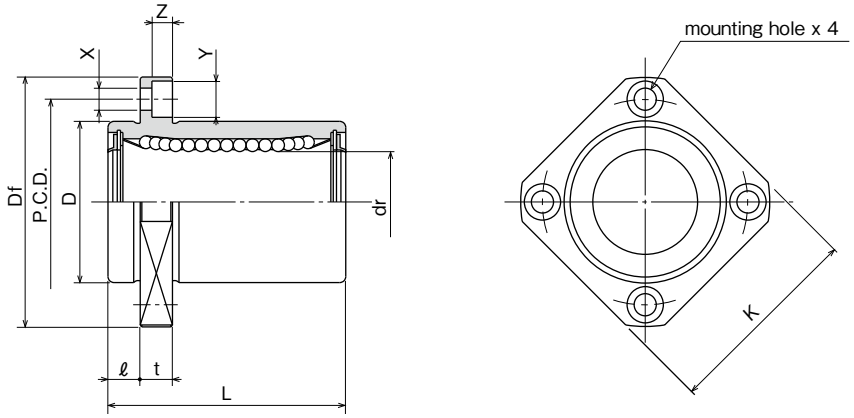

part number* standard steel retainer	standard resin retainer	anti-corrosion stainless retainer	anti-corrosion resin retainer	number of ball circuits	major dimensions dr mm	dr tolerance μm	D mm	D tolerance μm	L ±0.3 mm
SMK 6UU-E	SMK 6GUU-E	SMSK 6UU-E	SMSK 6GUU-E	4	6	0 / −9	12	0 / −13	19
SMK 8UU-E	SMK 8GUU-E	SMSK 8UU-E	SMSK 8GUU-E	4	8		15		24
SMK10UU-E	SMK10GUU-E	SMSK10UU-E	SMSK10GUU-E	4	10		19	0 / −16	29
SMK12UU-E	SMK12GUU-E	SMSK12UU-E	SMSK12GUU-E	4	12		21		30
SMK13UU-E	SMK13GUU-E	SMSK13UU-E	SMSK13GUU-E	4	13		23		32
SMK16UU-E	SMK16GUU-E	SMSK16UU-E	SMSK16GUU-E	4	16		28		37
SMK20UU-E	SMK20GUU-E	SMSK20UU-E	SMSK20GUU-E	5	20	0 / −10	32	0 / −19	42
SMK25UU-E	SMK25GUU-E	SMSK25UU-E	SMSK25GUU-E	6	25		40		59
SMK30UU-E	SMK30GUU-E	SMSK30UU-E	SMSK30GUU-E	6	30		45		64
SMK35UU-E	SMK35GUU-E	–	–	6	35	0 / −12	52	0 / −22	70
SMK40UU-E	SMK40GUU-E	–	–	6	40		60		80
SMK50UU-E	SMK50GUU-E	–	–	6	50		80		100
SMK60UU-E	SMK60GUU-E	–	–	6	60	0/−15	90	0/−25	110

* UU type is standard.

flange ℓ mm	Df mm	K mm	t mm	P.C.D. mm	X×Y×Z mm	eccentricity μm	perpendicularity μm	basic load rating dynamic C N	static Co N	mass g	shaft diameter mm
5	28	22	5	20	3.5×6×3.1	12	12	206	265	18	6
5	32	25	5	24	3.5×6×3.1			274	392	29	8
6	40	30	6	29	4.5×7.5×4.1			372	549	52	10
6	42	32	6	32	4.5×7.5×4.1			510	784	57	12
6	43	34	6	33	4.5×7.5×4.1			510	784	72	13
6	48	37	6	38	4.5×7.5×4.1			774	1,180	104	16
8	54	42	8	43	5.5×9×5.1	15	15	882	1,370	145	20
8	62	50	8	51	5.5×9×5.1			980	1,570	300	25
10	74	58	10	60	6.6×11×6.1			1,570	2,740	375	30
10	82	64	10	67	6.6×11×6.1	20	20	1,670	3,140	560	35
13	96	75	13	78	9×14×8.1			2,160	4,020	880	40
13	116	92	13	98	9×14×8.1			3,820	7,940	2,000	50
18	134	106	18	112	11×17×11.1	25	25	4,700	10,000	2,560	60

1N≒0.102kgf

www.bergab.ru Берг АБ bergab@ya.ru Тел. (495)-228-06-21, факс (495) 223-3071

www.bergab.ru Берг АБ bergab@ya.ru Тел. (495)-228-06-21, факс (495) 223-3071

SMT-E TYPE

– Two Side Cut Pilot End Flange Type –

part number structure

example **SMST 25 G UU - E - SK**

- **SMST**: specification — **SMT**: standard; **SMST**: anti-corrosion
- **25**: inner contact diameter (dr)
- **G**: retainer material — **blank**: standard/steel; anti-corrosion/stainless steel; **G**: resin
- **UU**: seals on both sides
- **E**: with pilot end
- **SK**: outer cylinder surface treatment — **blank**: no surface treatment; **SK**: electroless nickel plating; **LF**: low temperature black chrome treatment with fluoride coating; **SB**: black oxide (not available on anti-corrosion type); **SC**: industrial chrome plating

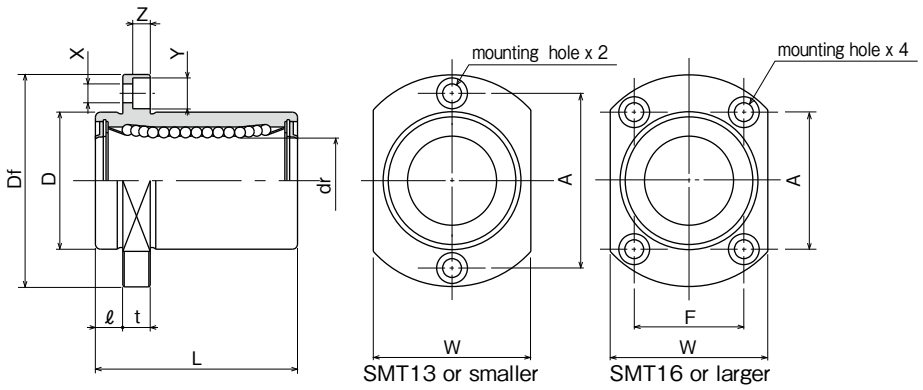

part number* standard steel retainer	standard resin retainer	anti-corrosion stainless retainer	anti-corrosion resin retainer	number of ball circuits	dr mm	dr tolerance μm	D mm	D tolerance μm	L ±0.3 mm
SMT 6UU-E	SMT 6GUU-E	SMST 6UU-E	SMST 6GUU-E	4	6	0 −9	12	0 −13	19
SMT 8UU-E	SMT 8GUU-E	SMST 8UU-E	SMST 8GUU-E	4	8		15		24
SMT10UU-E	SMT10GUU-E	SMST10UU-E	SMST10GUU-E	4	10		19	0 −16	29
SMT12UU-E	SMT12GUU-E	SMST12UU-E	SMST12GUU-E	4	12		21		30
SMT13UU-E	SMT13GUU-E	SMST13UU-E	SMST13GUU-E	4	13		23		32
SMT16UU-E	SMT16GUU-E	SMST16UU-E	SMST16GUU-E	4	16		28		37
SMT20UU-E	SMT20GUU-E	SMST20UU-E	SMST20GUU-E	5	20	0 −10	32	0 −19	42
SMT25UU-E	SMT25GUU-E	SMST25UU-E	SMST25GUU-E	6	25		40		59
SMT30UU-E	SMT30GUU-E	SMST30UU-E	SMST30GUU-E	6	30		45		64

* UU type is standard.

ℓ mm	Df mm	W mm	t mm	A mm	F mm	X×Y×Z mm	eccentricity μm	perpendicularity μm	basic load rating dynamic C N	basic load rating static Co N	mass g	shaft diameter mm
5	28	18	5	20	–	3.5×6×3.1	12	12	206	265	21	6
5	32	21	5	24	–	3.5×6×3.1			274	392	33	8
6	40	25	6	29	–	4.5×7.5×4.1			372	549	64	10
6	42	27	6	32	–	4.5×7.5×4.1			510	784	68	12
6	43	29	6	33	–	4.5×7.5×4.1			510	784	81	13
6	48	34	6	31	22	4.5×7.5×4.1			774	1,180	112	16
8	54	38	8	36	24	5.5×9×5.1	15	15	882	1,370	167	20
8	62	46	8	40	32	5.5×9×5.1			980	1,570	325	25
10	74	51	10	49	35	6.6×11×6.1			1,570	2,740	388	30

1N≒0.102kgf

www.bergab.ru Берг АБ bergab@ya.ru Тел. (495)-228-06-21, факс (495) 223-3071

www.bergab.ru Берг АБ bergab@ya.ru Тел. (495)-228-06-21, факс (495) 223-3071

SMK-G-L TYPE

— Square Flange Long type —

part number structure

example **SMK 25 G - L UU - SK**

- SMK type
- inner contact diameter (dr)
- resin retainer
- long type
- seals on both sides
- outer cylinder surface treatment
  - **blank**: no surface treatment
  - **SK**: electroless nickel plating
  - **LF**: low temperature black chrome treatment with fluoride coating
  - **SB**: black oxide (not available on anti-corrosion type)
  - **SC**: industrial chrome plating

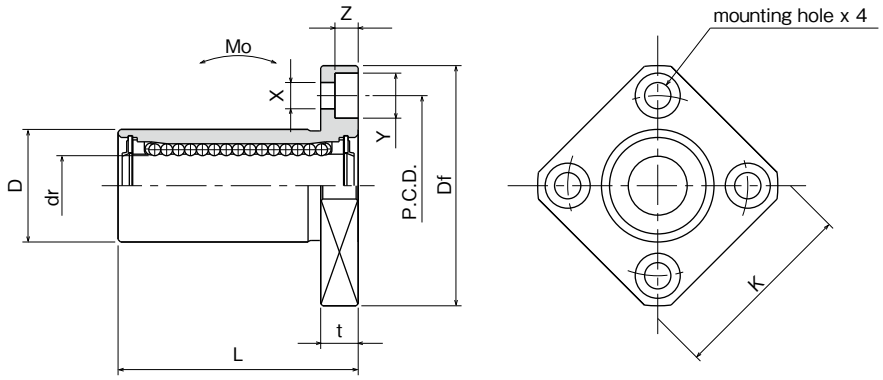

part number*	number of ball circuits	major dimensions: dr mm	dr tolerance μm	D mm	D tolerance μm	L ±0.3 mm	Df mm	K mm	flange t mm	flange P.C.D. mm
SMK 6G-LUU	4	6	0 −10	12	0 −13	26	28	22	5	20
SMK 8G-LUU	4	8		15		32	32	25	5	24
SMK10G-LUU	4	10		19	0 −16	39	40	30	6	29
SMK12G-LUU	4	12		21		41	42	32	6	32
SMK13G-LUU	4	13		23		45	43	34	6	33
SMK16G-LUU	4	16		28		53	48	37	6	38
SMK20G-LUU	5	20	0 −12	32	0 −19	59	54	42	8	43
SMK25G-LUU	6	25		40		83	62	50	8	51
SMK30G-LUU	6	30		45		90	74	58	10	60

* UU type is standard.

X×Y×Z mm	eccentricity μm	perpendicularity μm	basic load rating dynamic C N	basic load rating static Co N	allowable static moment Mo N・m	mass g	shaft diameter mm
3.5×6×3.1	15	15	262	476	1.15	20	6
3.5×6×3.1			352	615	1.94	32	8
4.5×7.5×4.1			493	1,005	3.98	59	10
4.5×7.5×4.1			637	1,430	6.26	67	12
4.5×7.5×4.1			682	1,560	7.68	88	13
4.5×7.5×4.1			1,039	2,350	13.2	125	16
5.5×9×5.1	20	20	1,160	2,740	17.9	170	20
5.5×9×5.1			1,300	2,960	27.2	380	25
6.6×11×6.1			2,160	5,880	61.3	460	30

1N≒0.102kgf 1N・m≒0.102kgf・m

www.bergab.ru Берг АБ bergab@ya.ru Тел. (495)-228-06-21, факс (495) 223-3071

www.bergab.ru Берг АБ bergab@ya.ru Тел. (495)-228-06-21, факс (495) 223-3071

SMF-W TYPE

– Round Flange Double-Wide Type –

part number structure

example **SMSF 25 G W UU - SK**

specification
SMF: standard
SMSF: anti-corrosion

inner contact diameter (dr)

retainer material
blank: standard/steel
anti-corrosion/stainless steel
G: resin

double-wide type

seal
blank: without seal
UU: seals on both sides

outer cylinder
surface treatment
blank: no surface treatment
SK: electroless nickel plating
LF: low temperature black chrome treatment with fluoride coating
SB: black oxide (not available on anti-corrosion type)
SC: industrial chrome plating

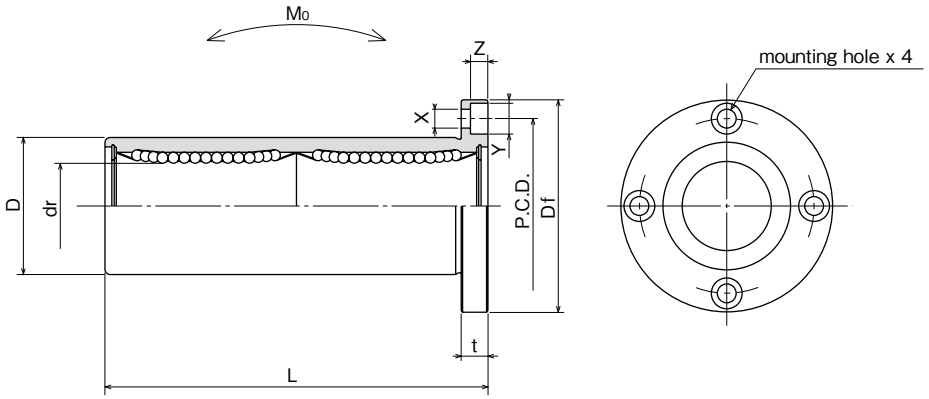

part number standard steel retainer	part number standard resin retainer	part number anti-corrosion stainless retainer	part number anti-corrosion resin retainer	number of ball circuits	major dimensions dr mm	dr tolerance μm	D mm	D tolerance μm	L ±0.3 mm
SMF 6W	SMF 6GW	SMSF 6W	SMSF 6GW	4	6	0 −10	12	0 −13	35
SMF 8W	SMF 8GW	SMSF 8W	SMSF 8GW	4	8		15		45
SMF10W	SMF10GW	SMSF10W	SMSF10GW	4	10		19	0 −16	55
SMF12W	SMF12GW	SMSF12W	SMSF12GW	4	12		21		57
SMF13W	SMF13GW	SMSF13W	SMSF13GW	4	13		23		61
SMF16W	SMF16GW	SMSF16W	SMSF16GW	4	16		28		70
SMF20W	SMF20GW	SMSF20W	SMSF20GW	5	20	0 −12	32	0 −19	80
SMF25W	SMF25GW	SMSF25W	SMSF25GW	6	25		40		112
SMF30W	SMF30GW	SMSF30W	SMSF30GW	6	30		45		123
SMF35W	SMF35GW	SMSF35W	SMSF35GW	6	35	0 −15	52	0 −22	135
SMF40W	SMF40GW	SMSF40W	SMSF40GW	6	40		60		151
SMF50W	SMF50GW	SMSF50W	SMSF50GW	6	50		80		192
SMF60W	SMF60GW	SMSF60W	SMSF60GW	6	60	0/−20	90	0/−25	209

flange Df mm	flange t mm	flange P.C.D. mm	flange X×Y×Z mm	eccentricity μm	perpendicularity μm	basic load rating dynamic C N	basic load rating static Co N	allowable static moment Mo N・m	mass g	shaft diameter mm
28	5	20	3.5×6×3.1	15	15	323	530	2.18	31	6
32	5	24	3.5×6×3.1			431	784	4.31	51	8
40	6	29	4.5×7.5×4.1			588	1,100	7.24	98	10
42	6	32	4.5×7.5×4.1			813	1,570	10.9	110	12
43	6	33	4.5×7.5×4.1			813	1,570	11.6	130	13
48	6	38	4.5×7.5×4.1			1,230	2,350	19.7	190	16
54	8	43	5.5×9×5.1	20	20	1,400	2,740	26.8	260	20
62	8	51	5.5×9×5.1			1,560	3,140	43.4	540	25
74	10	60	6.6×11×6.1			2,490	5,490	82.8	680	30
82	10	67	6.6×11×6.1	25	25	2,650	6,270	110	1,020	35
96	13	78	9×14×8.1			3,430	8,040	147	1,570	40
116	13	98	9×14×8.1			6,080	15,900	397	3,600	50
134	18	112	11×17×11.1	30	30	7,550	20,000	530	4,500	60

1N≒0.102kgf 1N・m≒0.102kgf・m

www.bergab.ru Берг АБ bergab@ya.ru Тел. (495)-228-06-21, факс (495) 223-3071

www.bergab.ru Берг АБ bergab@ya.ru Тел. (495)-228-06-21, факс (495) 223-3071

SMK-W TYPE

– Square Flange Double-Wide Type –

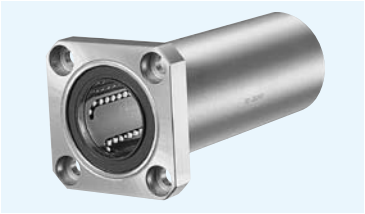

part number structure

example **SMSK 25 G W UU - SK**

specification
SMK: standard
SMSK: anti-corrosion

inner contact diameter (dr)

retainer material
blank: standard/steel
anti-corrosion/stainless steel
G: resin

double-wide type

seal
blank: without seal
UU: seals on both sides

outer cylinder
surface treatment
blank: no surface treatment
SK: electroless nickel plating
LF: low temperature black chrome treatment with fluoride coating
SB: black oxide (not available on anti-corrosion type)
SC: industrial chrome plating

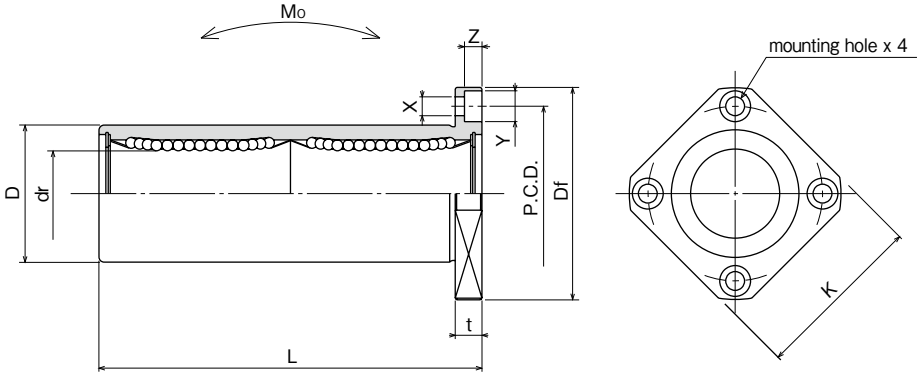

part number				number of ball circuits	major dimensions				
standard		anti-corrosion			dr		D		L
steel retainer	resin retainer	stainless retainer	resin retainer		mm	tolerance μm	mm	tolerance μm	±0.3 mm
SMK 6W	SMK 6GW	SMSK 6W	SMSK 6GW	4	6	0 −10	12	0 −13	35
SMK 8W	SMK 8GW	SMSK 8W	SMSK 8GW	4	8		15		45
SMK10W	SMK10GW	SMSK10W	SMSK10GW	4	10		19	0 −16	55
SMK12W	SMK12GW	SMSK12W	SMSK12GW	4	12		21		57
SMK13W	SMK13GW	SMSK13W	SMSK13GW	4	13		23		61
SMK16W	SMK16GW	SMSK16W	SMSK16GW	4	16		28		70
SMK20W	SMK20GW	SMSK20W	SMSK20GW	5	20	0 −12	32	0 −19	80
SMK25W	SMK25GW	SMSK25W	SMSK25GW	6	25		40		112
SMK30W	SMK30GW	SMSK30W	SMSK30GW	6	30		45		123
SMK35W	SMK35GW	SMSK35W	SMSK35GW	6	35	0 −15	52	0 −22	135
SMK40W	SMK40GW	SMSK40W	SMSK40GW	6	40		60		151
SMK50W	SMK50GW	SMSK50W	SMSK50GW	6	50		80		192
SMK60W	SMK60GW	SMSK60W	SMSK60GW	6	60	0/−20	90	0/−25	209

flange					eccentricity	perpendicularity	basic load rating		allowable	mass	shaft
							dynamic	static	static moment		diameter
Df mm	K mm	t mm	P.C.D. mm	X×Y×Z mm	μm	μm	C N	Co N	Mo N・m	g	mm
28	22	5	20	3.5×6×3.1	15	15	323	530	2.18	25	6
32	25	5	24	3.5×6×3.1			431	784	4.31	43	8
40	30	6	29	4.5×7.5×4.1			588	1,100	7.24	78	10
42	32	6	32	4.5×7.5×4.1			813	1,570	10.9	90	12
43	34	6	33	4.5×7.5×4.1			813	1,570	11.6	108	13
48	37	6	38	4.5×7.5×4.1			1,230	2,350	19.7	165	16
54	42	8	43	5.5×9×5.1	20	20	1,400	2,740	26.8	225	20
62	50	8	51	5.5×9×5.1			1,560	3,140	43.4	500	25
74	58	10	60	6.6×11×6.1			2,490	5,490	82.8	590	30
82	64	10	67	6.6×11×6.1	25	25	2,650	6,270	110	930	35
96	75	13	78	9×14×8.1			3,430	8,040	147	1,380	40
116	92	13	98	9×14×8.1			6,080	15,900	397	3,400	50
134	106	18	112	11×17×11.1	30	30	7,550	20,000	530	4,060	60

1N≒0.102kgf 1N・m≒0.102kgf・m

www.bergab.ru Берг АБ bergab@ya.ru Тел. (495)-228-06-21, факс (495) 223-3071

www.bergab.ru Берг АБ bergab@ya.ru Тел. (495)-228-06-21, факс (495) 223-3071

SMT-W TYPE

— Two Side Cut Double-Wide Flange Type —

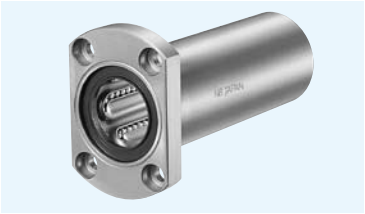

part number structure

example **SMST 25 G W UU - SK**

- **SMST**: specification
  - **SMT**: standard
  - **SMST**: anti-corrosion
- **25**: inner contact diameter (dr)
- **G**: retainer material
  - **blank**: standard/steel
  - anti-corrosion/stainless steel
  - **G**: resin
- **W**: double-wide type
- **UU**: seals on both sides
- **SK**: outer cylinder surface treatment
  - **blank**: no surface treatment
  - **SK**: electroless nickel plating
  - **LF**: low temperature black chrome treatment with fluoride coating
  - **SB**: black oxide (not available on anti-corrosion type)
  - **SC**: industrial chrome plating

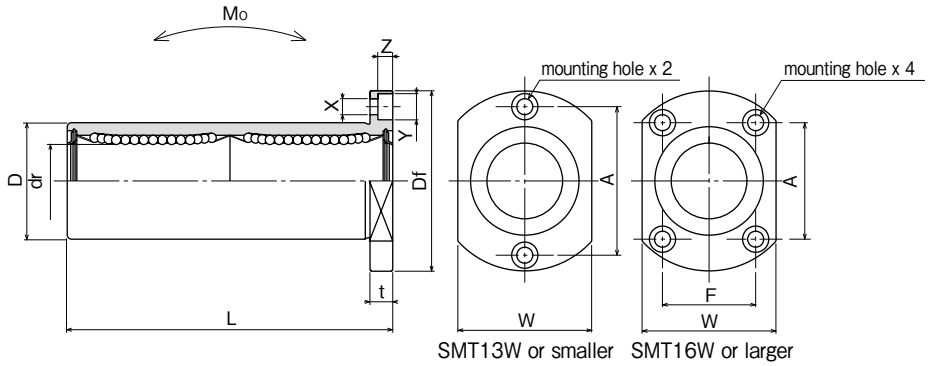

part number* standard steel retainer	standard resin retainer	anti-corrosion stainless retainer	anti-corrosion resin retainer	number of ball circuits	dr mm	dr tolerance μm	D mm	D tolerance μm	L ±0.3 mm
SMT 6WUU	SMT 6GWUU	SMST 6WUU	SMST 6GWUU	4	6	0 −10	12	0 −13	35
SMT 8WUU	SMT 8GWUU	SMST 8WUU	SMST 8GWUU	4	8		15		45
SMT10WUU	SMT10GWUU	SMST10WUU	SMST10GWUU	4	10		19	0 −16	55
SMT12WUU	SMT12GWUU	SMST12WUU	SMST12GWUU	4	12		21		57
SMT13WUU	SMT13GWUU	SMST13WUU	SMST13GWUU	4	13		23		61
SMT16WUU	SMT16GWUU	SMST16WUU	SMST16GWUU	4	16		28		70
SMT20WUU	SMT20GWUU	SMST20WUU	SMST20GWUU	5	20	0 −12	32	0 −19	80
SMT25WUU	SMT25GWUU	SMST25WUU	SMST25GWUU	6	25		40		112
SMT30WUU	SMT30GWUU	SMST30WUU	SMST30GWUU	6	30		45		123

* UU type is standard.

Df mm	W mm	t mm	flange A mm	F mm	X×Y×Z mm	eccentricity μm	perpendicularity μm	basic load rating dynamic C N	static Co N	allowable static moment Mo N・m	mass g	shaft diameter mm
28	18	5	20	—	3.5×6×3.1	15	15	323	530	2.18	28	6
32	21	5	24	—	3.5×6×3.1			431	784	4.31	47	8
40	25	6	29	—	4.5×7.5×4.1			588	1,100	7.24	90	10
42	27	6	32	—	4.5×7.5×4.1			813	1,570	10.9	102	12
43	29	6	33	—	4.5×7.5×4.1			813	1,570	11.6	123	13
48	34	6	31	22	4.5×7.5×4.1			1,230	2,350	19.7	182	16
54	38	8	36	24	5.5×9×5.1	20	20	1,400	2,740	26.8	247	20
62	46	8	40	32	5.5×9×5.1			1,560	3,140	43.4	525	25
74	51	10	49	35	6.6×11×6.1			2,490	5,490	82.8	645	30

1N≒0.102kgf 1N・m≒0.102kgf・m

www.bergab.ru Берг АБ bergab@ya.ru Тел. (495)-228-06-21, факс (495) 223-3071

www.bergab.ru Берг АБ bergab@ya.ru Тел. (495)-228-06-21, факс (495) 223-3071

SMFC TYPE

– Center Mount Round Flange Type –

part number structure

example **SMSFC 25 G UU - SK**

specification
SMFC: standard
SMSFC: anti-corrosion

inner contact diameter (dr)

retainer material
blank: standard/steel
anti-corrosion/stainless steel
G: resin

seal
blank: without seal
UU: seals on both sides

outer cylinder
surface treatment
blank: no surface treatment
SK: electroless nickel plating
LF: low temperature black chrome treatment with fluoride coating
SB: black oxide (not available on anti-corrosion type)
SC: industrial chrome plating

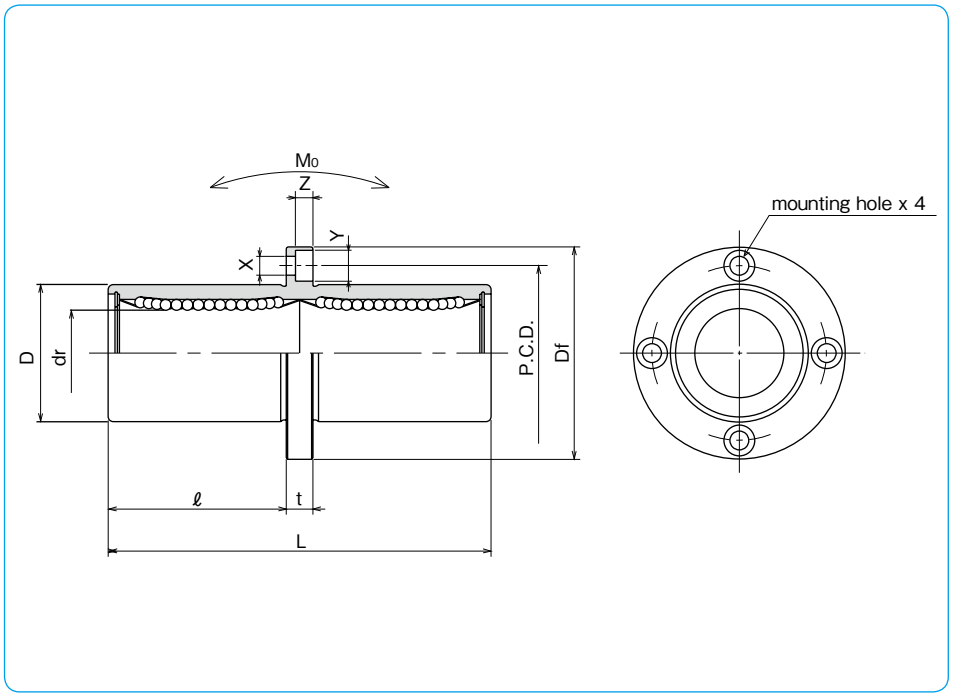

part number standard steel retainer	part number standard resin retainer	part number anti-corrosion stainless retainer	part number anti-corrosion resin retainer	number of ball circuits	dr mm	dr tolerance μm	D mm	D tolerance μm	L ±0.3 mm
SMFC 6	SMFC 6G	SMSFC 6	SMSFC 6G	4	6	0 −10	12	0 −13	35
SMFC 8	SMFC 8G	SMSFC 8	SMSFC 8G	4	8		15		45
SMFC10	SMFC10G	SMSFC10	SMSFC10G	4	10		19	0 −16	55
SMFC12	SMFC12G	SMSFC12	SMSFC12G	4	12		21		57
SMFC13	SMFC13G	SMSFC13	SMSFC13G	4	13		23		61
SMFC16	SMFC16G	SMSFC16	SMSFC16G	4	16		28		70
SMFC20	SMFC20G	SMSFC20	SMSFC20G	5	20	0 −12	32	0 −19	80
SMFC25	SMFC25G	SMSFC25	SMSFC25G	6	25		40		112
SMFC30	SMFC30G	SMSFC30	SMSFC30G	6	30		45		123
SMFC35	SMFC35G	SMSFC35	SMSFC35G	6	35	0 −15	52	0 −22	135
SMFC40	SMFC40G	SMSFC40	SMSFC40G	6	40		60		151
SMFC50	SMFC50G	SMSFC50	SMSFC50G	6	50		80		192
SMFC60	SMFC60G	SMSFC60	SMSFC60G	6	60	0/−20	90	0/−25	209

flange ℓ mm	flange Df mm	flange t mm	flange P.C.D. mm	flange X×Y×Z mm	eccentricity μm	perpendicularity μm	basic load rating dynamic C N	basic load rating static Co N	allowable static moment Mo N・m	mass g	shaft diameter mm
15	28	5	20	3.5×6×3.1	15	15	323	530	2.18	31	6
20	32	5	24	3.5×6×3.1			431	784	4.31	51	8
24.5	40	6	29	4.5×7.5×4.1			588	1,100	7.24	98	10
25.5	42	6	32	4.5×7.5×4.1			813	1,570	10.9	110	12
27.5	43	6	33	4.5×7.5×4.1			813	1,570	11.6	130	13
32	48	6	38	4.5×7.5×4.1			1,230	2,350	19.7	190	16
36	54	8	43	5.5×9×5.1	20	20	1,400	2,740	26.8	260	20
52	62	8	51	5.5×9×5.1			1,560	3,140	43.4	540	25
56.5	74	10	60	6.6×11×6.1			2,490	5,490	82.8	680	30
62.5	82	10	67	6.6×11×6.1	25	25	2,650	6,270	110	1,020	35
69	96	13	78	9×14×8.1			3,430	8,040	147	1,570	40
89.5	116	13	98	9×14×8.1			6,080	15,900	397	3,600	50
95.5	134	18	112	11×17×11.1	30	30	7,550	20,000	530	4,500	60

1N≒0.102kgf 1N・m≒0.102kgf・m

www.bergab.ru Берг АБ bergab@ya.ru Тел. (495)-228-06-21, факс (495) 223-3071

www.bergab.ru Берг АБ bergab@ya.ru Тел. (495)-228-06-21, факс (495) 223-3071

SMKC TYPE

– Center Mount Square Flange Type –

part number structure

example **SMSKC 25 G UU - SK**

specification
SMKC: standard
SMSKC: anti-corrosion

inner contact diameter (dr)

retainer material
blank: standard/steel
anti-corrosion/stainless steel
G: resin

seal
blank: without seal
UU: seals on both sides

outer cylinder
surface treatment
blank: no surface treatment
SK: electroless nickel plating
LF: low temperature black chrome treatment with fluoride coating
SB: black oxide (not available on anti-corrosion type)
SC: industrial chrome plating

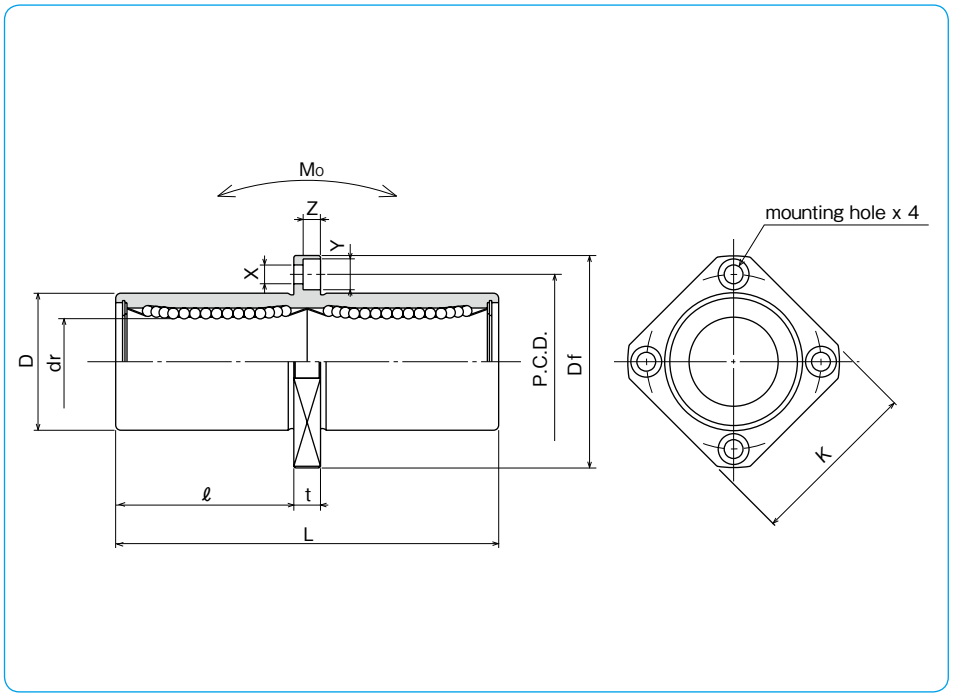

part number standard steel retainer	part number standard resin retainer	part number anti-corrosion stainless retainer	part number anti-corrosion resin retainer	number of ball circuits	major dimensions dr mm	dr tolerance μm	D mm	D tolerance μm	L ±0.3 mm
SMKC 6	SMKC 6G	SMSKC 6	SMSKC 6G	4	6	0 −10	12	0 −13	35
SMKC 8	SMKC 8G	SMSKC 8	SMSKC 8G	4	8		15		45
SMKC10	SMKC10G	SMSKC10	SMSKC10G	4	10		19	0 −16	55
SMKC12	SMKC12G	SMSKC12	SMSKC12G	4	12		21		57
SMKC13	SMKC13G	SMSKC13	SMSKC13G	4	13		23		61
SMKC16	SMKC16G	SMSKC16	SMSKC16G	4	16		28		70
SMKC20	SMKC20G	SMSKC20	SMSKC20G	5	20	0 −12	32	0 −19	80
SMKC25	SMKC25G	SMSKC25	SMSKC25G	6	25		40		112
SMKC30	SMKC30G	SMSKC30	SMSKC30G	6	30		45		123
SMKC35	SMKC35G	SMSKC35	SMSKC35G	6	35	0 −15	52	0 −22	135
SMKC40	SMKC40G	SMSKC40	SMSKC40G	6	40		60		151
SMKC50	SMKC50G	SMSKC50	SMSKC50G	6	50		80		192
SMKC60	SMKC60G	SMSKC60	SMSKC60G	6	60	0/−20	90	0/−25	209

flange ℓ mm	flange Df mm	flange K mm	flange t mm	flange P.C.D. mm	flange X×Y×Z mm	eccentricity μm	perpendicularity μm	basic load rating dynamic C N	basic load rating static Co N	allowable static moment Mo N・m	mass g	shaft diameter mm
15	28	22	5	20	3.5×6×3.1	15	15	323	530	2.18	25	6
20	32	25	5	24	3.5×6×3.1			431	784	4.31	43	8
24.5	40	30	6	29	4.5×7.5×4.1			588	1,100	7.24	78	10
25.5	42	32	6	32	4.5×7.5×4.1			813	1,570	10.9	90	12
27.5	43	34	6	33	4.5×7.5×4.1			813	1,570	11.6	108	13
32	48	37	6	38	4.5×7.5×4.1			1,230	2,350	19.7	165	16
36	54	42	8	43	5.5×9×5.1	20	20	1,400	2,740	26.8	225	20
52	62	50	8	51	5.5×9×5.1			1,560	3,140	43.4	500	25
56.5	74	58	10	60	6.6×11×6.1			2,490	5,490	82.8	590	30
62.5	82	64	10	67	6.6×11×6.1	25	25	2,650	6,270	110	930	35
69	96	75	13	78	9×14×8.1			3,430	8,040	147	1,380	40
89.5	116	92	13	98	9×14×8.1			6,080	15,900	397	3,400	50
95.5	134	106	18	112	11×17×11.1	30	30	7,550	20,000	530	4,060	60

1N≒0.102kgf 1N・m≒0.102kgf・m

www.bergab.ru Берг АБ bergab@ya.ru Тел. (495)-228-06-21, факс (495) 223-3071

www.bergab.ru Берг АБ bergab@ya.ru Тел. (495)-228-06-21, факс (495) 223-3071

SMTC TYPE

– Two Side Cut Center Flange Type –

part number structure

example **SMSTC 25 G UU - SK**

specification
SMTC: standard
SMSTC: anti-corrosion

inner contact diameter (dr)

retainer material
blank: standard/steel
anti-corrosion/stainless steel
G: resin

seals on both sides

outer cylinder
surface treatment
blank: no surface treatment
SK: electroless nickel plating
LF: low temperature black chrome treatment with fluoride coating
SB: black oxide (not available on anti-corrosion type)
SC: industrial chrome plating

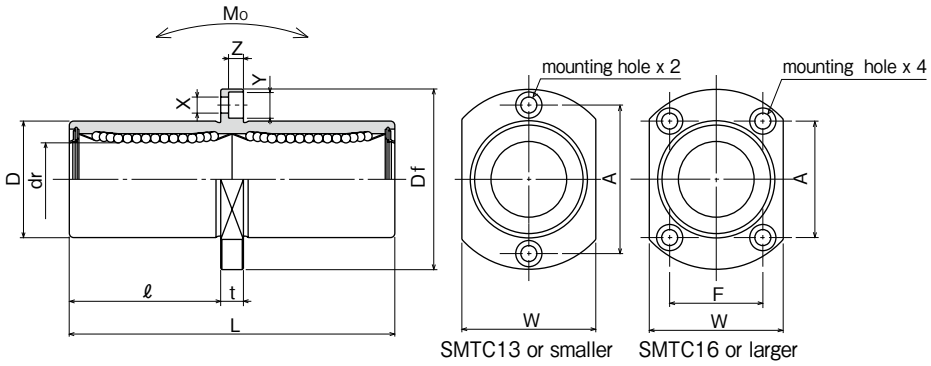

part number* standard steel retainer	standard resin retainer	anti-corrosion stainless retainer	anti-corrosion resin retainer	number of ball circuits	dr mm	dr tolerance μm	D mm	D tolerance μm	L ±0.3 mm
SMTC 6UU	SMTC 6GUU	SMSTC 6UU	SMSTC 6GUU	4	6	0 −10	12	0 −13	35
SMTC 8UU	SMTC 8GUU	SMSTC 8UU	SMSTC 8GUU	4	8		15		45
SMTC10UU	SMTC10GUU	SMSTC10UU	SMSTC10GUU	4	10		19	0 −16	55
SMTC12UU	SMTC12GUU	SMSTC12UU	SMSTC12GUU	4	12		21		57
SMTC13UU	SMTC13GUU	SMSTC13UU	SMSTC13GUU	4	13		23		61
SMTC16UU	SMTC16GUU	SMSTC16UU	SMSTC16GUU	4	16		28		70
SMTC20UU	SMTC20GUU	SMSTC20UU	SMSTC20GUU	5	20	0 −12	32	0 −19	80
SMTC25UU	SMTC25GUU	SMSTC25UU	SMSTC25GUU	6	25		40		112
SMTC30UU	SMTC30GUU	SMSTC30UU	SMSTC30GUU	6	30		45		123

* UU type is standard.

flange ℓ mm	Df mm	W mm	t mm	A mm	F mm	X×Y×Z mm	eccentricity μm	perpendicularity μm	basic load rating dynamic C N	static Co N	allowable static moment Mo N・m	mass g	shaft diameter mm
15	28	18	5	20	—	3.5×6×3.1	15	15	323	530	2.18	28	6
20	32	21	5	24	—	3.5×6×3.1			431	784	4.31	47	8
24.5	40	25	6	29	—	4.5×7.5×4.1			588	1,100	7.24	90	10
25.5	42	27	6	32	—	4.5×7.5×4.1			813	1,570	10.9	102	12
27.5	43	29	6	33	—	4.5×7.5×4.1			813	1,570	11.6	123	13
32	48	34	6	31	22	4.5×7.5×4.1			1,230	2,350	19.7	182	16
36	54	38	8	36	24	5.5×9×5.1	20	20	1,400	2,740	26.8	247	20
52	62	46	8	40	32	5.5×9×5.1			1,560	3,140	43.4	525	25
56.5	74	51	10	49	35	6.6×11×6.1			2,490	5,490	82.8	645	30

1N≒0.102kgf 1N・m≒0.102kgf・m

www.bergab.ru Берг АБ bergab@ya.ru Тел. (495)-228-06-21, факс (495) 223-3071

www.bergab.ru Берг АБ bergab@ya.ru Тел. (495)-228-06-21, факс (495) 223-3071

SMF-W-E TYPE

— Round Flange Double-Wide Pilot End Type —

part number structure

example **SMSF 25 G W UU - E - SK**

- specification
  SMF: standard
  SMSF: anti-corrosion
- inner contact diameter (dr)
- retainer material
  blank: standard/steel
  anti-corrosion/stainless steel
  G: resin
- double-wide type
- seals on both sides
- with pilot end
- outer cylinder surface treatment
  blank: no surface treatment
  SK: electroless nickel plating
  LF: low temperature black chrome treatment with fluoride coating
  SB: black oxide (not available on anti-corrosion type)
  SC: industrial chrome plating

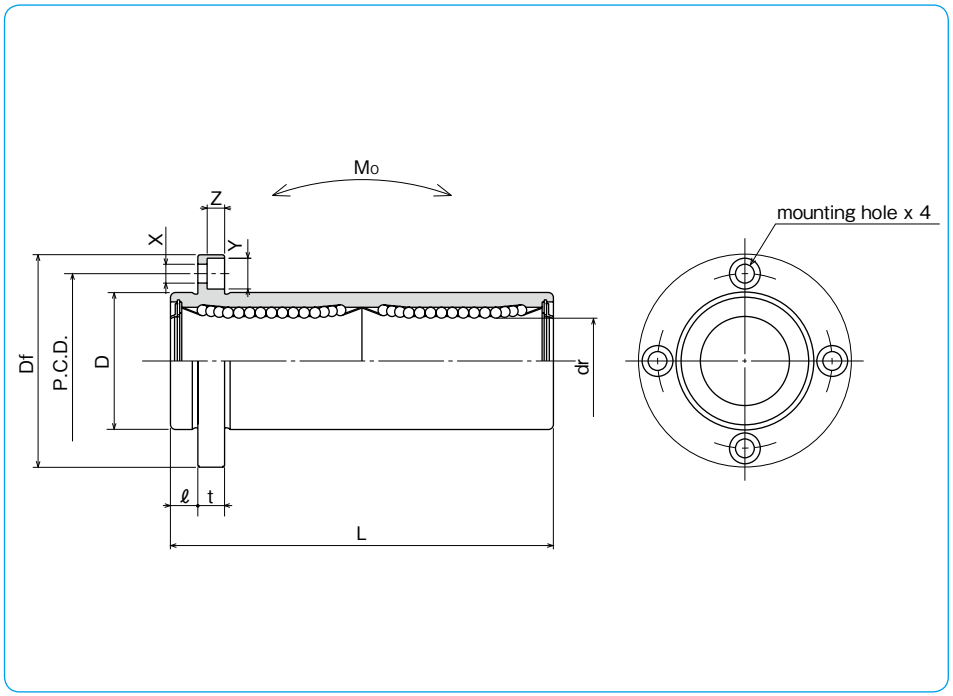

part number* standard steel retainer	standard resin retainer	anti-corrosion stainless retainer	anti-corrosion resin retainer	number of ball circuits	dr mm	dr tolerance μm	D mm	D tolerance μm	L ±0.3 mm
SMF 6WUU-E	SMF 6GWUU-E	SMSF 6WUU-E	SMSF 6GWUU-E	4	6	0 −10	12	0 −13	35
SMF 8WUU-E	SMF 8GWUU-E	SMSF 8WUU-E	SMSF 8GWUU-E	4	8		15		45
SMF10WUU-E	SMF10GWUU-E	SMSF10WUU-E	SMSF10GWUU-E	4	10		19	0 −16	55
SMF12WUU-E	SMF12GWUU-E	SMSF12WUU-E	SMSF12GWUU-E	4	12		21		57
SMF13WUU-E	SMF13GWUU-E	SMSF13WUU-E	SMSF13GWUU-E	4	13		23		61
SMF16WUU-E	SMF16GWUU-E	SMSF16WUU-E	SMSF16GWUU-E	4	16		28		70
SMF20WUU-E	SMF20GWUU-E	SMSF20WUU-E	SMSF20GWUU-E	5	20	0 −12	32	0 −19	80
SMF25WUU-E	SMF25GWUU-E	SMSF25WUU-E	SMSF25GWUU-E	6	25		40		112
SMF30WUU-E	SMF30GWUU-E	SMSF30WUU-E	SMSF30GWUU-E	6	30		45		123
SMF35WUU-E	SMF35GWUU-E	—	—	6	35	0 −15	52	0 −22	135
SMF40WUU-E	SMF40GWUU-E	—	—	6	40		60		151
SMF50WUU-E	SMF50GWUU-E	—	—	6	50		80		192
SMF60WUU-E	SMF60GWUU-E	—	—	6	60	0/−20	90	0/−25	209

* UU type is standard.

flange ℓ mm	Df mm	t mm	P.C.D. mm	X×Y×Z mm	eccentricity μm	perpendicularity μm	basic load rating dynamic C N	basic load rating static Co N	allowable static moment Mo N・m	mass g	shaft diameter mm
5	28	5	20	3.5×6×3.1	15	15	323	530	2.18	31	6
5	32	5	24	3.5×6×3.1			431	784	4.31	51	8
6	40	6	29	4.5×7.5×4.1			588	1,100	7.24	98	10
6	42	6	32	4.5×7.5×4.1			813	1,570	10.9	110	12
6	43	6	33	4.5×7.5×4.1			813	1,570	11.6	130	13
6	48	6	38	4.5×7.5×4.1			1,230	2,350	19.7	190	16
8	54	8	43	5.5×9×5.1	20	20	1,400	2,740	26.8	260	20
8	62	8	51	5.5×9×5.1			1,560	3,140	43.4	540	25
10	74	10	60	6.6×11×6.1			2,490	5,490	82.8	680	30
10	82	10	67	6.6×11×6.1	25	25	2,650	6,270	110	1,020	35
13	96	13	78	9×14×8.1			3,430	8,040	147	1,570	40
13	116	13	98	9×14×8.1			6,080	15,900	397	3,600	50
18	134	18	112	11×17×11.1	30	30	7,550	20,000	530	4,500	60

1N≒0.102kgf 1N・m≒0.102kgf・m

www.bergab.ru Берг АБ bergab@ya.ru Тел. (495)-228-06-21, факс (495) 223-3071

www.bergab.ru Берг АБ bergab@ya.ru Тел. (495)-228-06-21, факс (495) 223-3071

SMK-W-E TYPE

— Square Flange Double-Wide Pilot End Type —

part number structure

example **SMSK 25 G W UU - E - SK**

- specification
  - **SMK**: standard
  - **SMSK**: anti-corrosion
- inner contact diameter (dr)
- retainer material
  - **blank**: standard/steel
  - anti-corrosion/stainless steel
  - **G**: resin
- double-wide type
- seals on both sides
- with pilot end
- outer cylinder surface treatment
  - **blank**: no surface treatment
  - **SK**: electroless nickel plating
  - **LF**: low temperature black chrome treatment with fluoride coating
  - **SB**: black oxide (not available on anti-corrosion type)
  - **SC**: industrial chrome plating

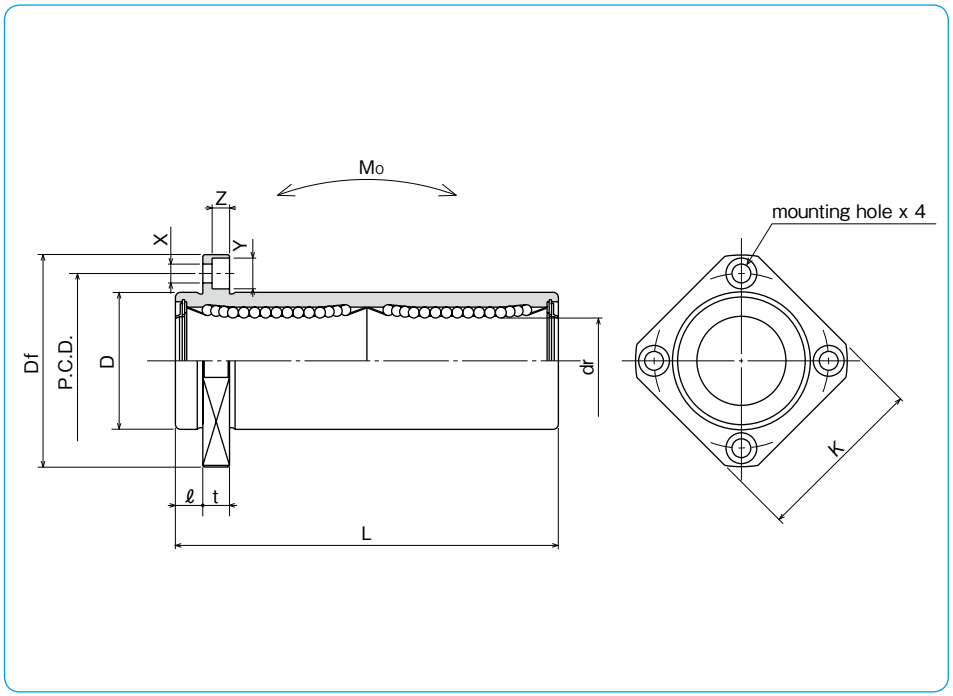

part number* standard steel retainer	standard resin retainer	anti-corrosion stainless retainer	anti-corrosion resin retainer	number of ball circuits	major dimensions dr mm	dr tolerance μm	D mm	D tolerance μm	L ±0.3 mm
SMK 6WUU-E	SMK 6GWUU-E	SMSK 6WUU-E	SMSK 6GWUU-E	4	6	0 −10	12	0 −13	35
SMK 8WUU-E	SMK 8GWUU-E	SMSK 8WUU-E	SMSK 8GWUU-E	4	8		15		45
SMK10WUU-E	SMK10GWUU-E	SMSK10WUU-E	SMSK10GWUU-E	4	10		19	0 −16	55
SMK12WUU-E	SMK12GWUU-E	SMSK12WUU-E	SMSK12GWUU-E	4	12		21		57
SMK13WUU-E	SMK13GWUU-E	SMSK13WUU-E	SMSK13GWUU-E	4	13		23		61
SMK16WUU-E	SMK16GWUU-E	SMSK16WUU-E	SMSK16GWUU-E	4	16		28		70
SMK20WUU-E	SMK20GWUU-E	SMSK20WUU-E	SMSK20GWUU-E	5	20	0 −12	32	0 −19	80
SMK25WUU-E	SMK25GWUU-E	SMSK25WUU-E	SMSK25GWUU-E	6	25		40		112
SMK30WUU-E	SMK30GWUU-E	SMSK30WUU-E	SMSK30GWUU-E	6	30		45		123
SMK35WUU-E	SMK35GWUU-E	—	—	6	35	0 −15	52	0 −22	135
SMK40WUU-E	SMK40GWUU-E	—	—	6	40		60		151
SMK50WUU-E	SMK50GWUU-E	—	—	6	50		80		192
SMK60WUU-E	SMK60GWUU-E	—	—	6	60	0/−20	90	0/−25	209

* UU type is standard.

flange ℓ mm	Df mm	K mm	t mm	P.C.D. mm	X×Y×Z mm	eccentricity μm	perpendicularity μm	basic load rating dynamic C N	basic load rating static Co N	allowable static moment Mo N・m	mass g	shaft diameter mm
5	28	22	5	20	3.5×6×3.1	15	15	323	530	2.18	25	6
5	32	25	5	24	3.5×6×3.1			431	784	4.31	43	8
6	40	30	6	29	4.5×7.5×4.1			588	1,100	7.24	78	10
6	42	32	6	32	4.5×7.5×4.1			813	1,570	10.9	90	12
6	43	34	6	33	4.5×7.5×4.1			813	1,570	11.6	108	13
6	48	37	6	38	4.5×7.5×4.1			1,230	2,350	19.7	165	16
8	54	42	8	43	5.5×9×5.1	20	20	1,400	2,740	26.8	225	20
8	62	50	8	51	5.5×9×5.1			1,560	3,140	43.4	500	25
10	74	58	10	60	6.6×11×6.1			2,490	5,490	82.8	590	30
10	82	64	10	67	6.6×11×6.1	25	25	2,650	6,270	110	930	35
13	96	75	13	78	9×14×8.1			3,430	8,040	147	1,380	40
13	116	92	13	98	9×14×8.1			6,080	15,900	397	3,400	50
18	134	106	18	112	11×17×11.1	30	30	7,550	20,000	530	4,060	60

1N≒0.102kgf 1N・m≒0.102kgf・m

www.bergab.ru Берг АБ bergab@ya.ru Тел. (495)-228-06-21, факс (495) 223-3071

www.bergab.ru Берг АБ bergab@ya.ru Тел. (495)-228-06-21, факс (495) 223-3071

SMT-W-E TYPE

— Two Side Cut Double-Wide Flange Pilot End Type —

part number structure

example **SMST 25 G W UU - E - SK**

- specification
  - **SMT**: standard
  - **SMST**: anti-corrosion
- inner contact diameter (dr)
- retainer material
  - **blank**: standard/steel
  - anti-corrosion/stainless steel
  - **G**: resin
- double-wide type
- seals on both sides
- with pilot end
- outer cylinder surface treatment
  - **blank**: no surface treatment
  - **SK**: electroless nickel plating
  - **LF**: low temperature black chrome treatment with fluoride coating
  - **SB**: black oxide (not available on anti-corrosion type)
  - **SC**: industrial chrome plating

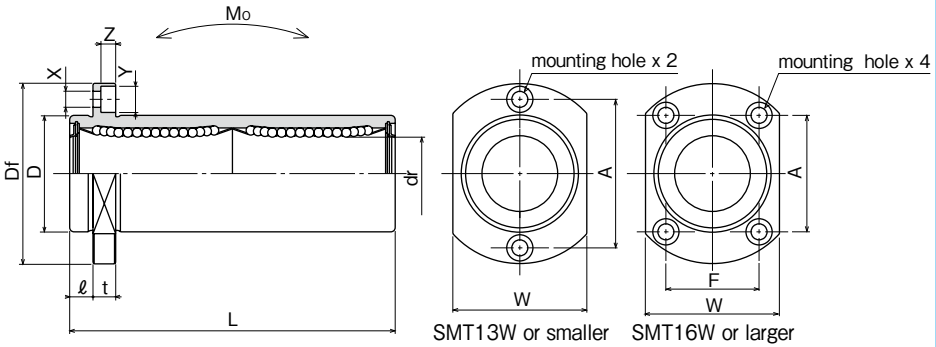

part number* standard: steel retainer	part number* standard: resin retainer	part number* anti-corrosion: stainless retainer	part number* anti-corrosion: resin retainer	number of ball circuits	dr mm	dr tolerance μm	D mm	D tolerance μm	L ±0.3 mm
SMT 6WUU-E	SMT 6GWUU-E	SMST 6WUU-E	SMST 6GWUU-E	4	6	0 −10	12	0 −13	35
SMT 8WUU-E	SMT 8GWUU-E	SMST 8WUU-E	SMST 8GWUU-E	4	8		15		45
SMT10WUU-E	SMT10GWUU-E	SMST10WUU-E	SMST10GWUU-E	4	10		19	0 −16	55
SMT12WUU-E	SMT12GWUU-E	SMST12WUU-E	SMST12GWUU-E	4	12		21		57
SMT13WUU-E	SMT13GWUU-E	SMST13WUU-E	SMST13GWUU-E	4	13		23		61
SMT16WUU-E	SMT16GWUU-E	SMST16WUU-E	SMST16GWUU-E	4	16		28		70
SMT20WUU-E	SMT20GWUU-E	SMST20WUU-E	SMST20GWUU-E	5	20	0 −12	32	0 −19	80
SMT25WUU-E	SMT25GWUU-E	SMST25WUU-E	SMST25GWUU-E	6	25		40		112
SMT30WUU-E	SMT30GWUU-E	SMST30WUU-E	SMST30GWUU-E	6	30		45		123

* UU type is standard.

ℓ mm	Df mm	W mm	t mm	A mm	F mm	X×Y×Z mm	eccentricity μm	perpendicularity μm	basic load rating dynamic C N	basic load rating static Co N	allowable static moment Mo N・m	mass g	shaft diameter mm
5	28	18	5	20	—	3.5×6×3.1	15	15	323	530	2.18	28	6
5	32	21	5	24	—	3.5×6×3.1			431	784	4.31	47	8
6	40	25	6	29	—	4.5×7.5×4.1			588	1,100	7.24	90	10
6	42	27	6	32	—	4.5×7.5×4.1			813	1,570	10.9	102	12
6	43	29	6	33	—	4.5×7.5×4.1			813	1,570	11.6	123	13
6	48	34	6	31	22	4.5×7.5×4.1			1,230	2,350	19.7	182	16
8	54	38	8	36	24	5.5×9×5.1	20	20	1,400	2,740	26.8	247	20
8	62	46	8	40	32	5.5×9×5.1			1,560	3,140	43.4	525	25
10	74	51	10	49	35	6.6×11×6.1			2,490	5,490	82.8	645	30

1N≒0.102kgf 1N・m≒0.102kgf・m

www.bergab.ru Берг АБ bergab@ya.ru Тел. (495)-228-06-21, факс (495) 223-3071

www.bergab.ru Берг АБ bergab@ya.ru Тел. (495)-228-06-21, факс (495) 223-3071

TRF TYPE

– Triple-Wide Round Flange Type –

part number structure

example **TRF 25 G UU - Q**

- TRF type
- inner contact diameter (dr)
- retainer material
  blank: steel
  G: resin
- seals on both sides
- grease fitting
  blank: without
  Q: grease fitting

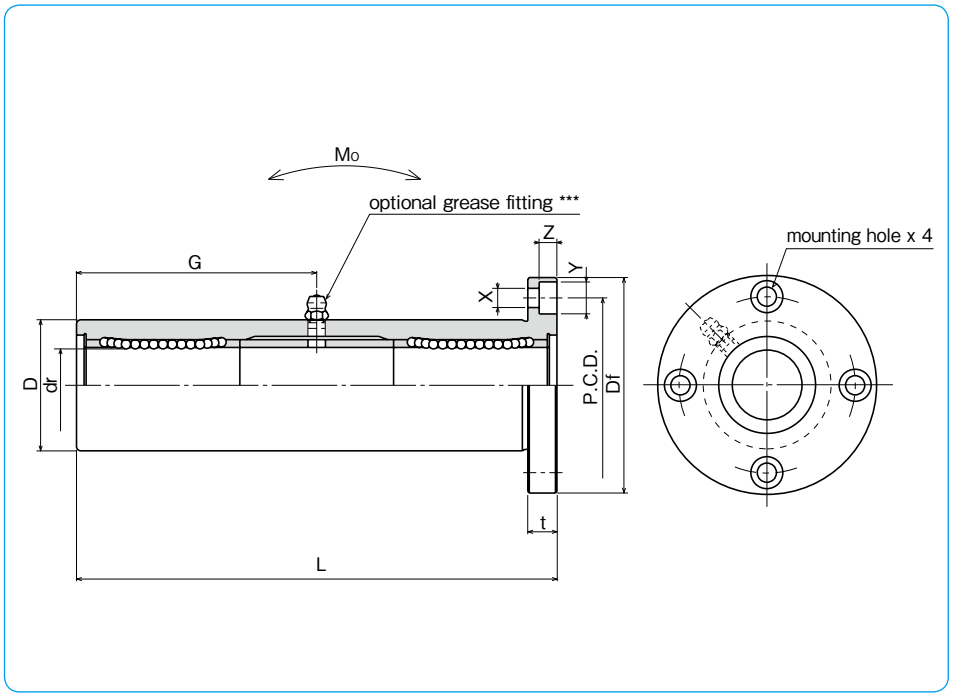

part number* steel retainer	part number* resin retainer	number of ball circuits	dr mm	dr tolerance μm	D mm	D tolerance μm	L ±0.3 mm
TRF 6UU	TRF 6GUU	4	6	0 −12	15	0/−18	51
TRF 8UU	TRF 8GUU	4	8		19	0 −21	66
TRF10UU	TRF10GUU	4	10		23		80
TRF12UU	TRF12GUU	4	12	0 −15	26		84
TRF13UU	TRF13GUU	4	13		28		90
TRF16UU	TRF16GUU	4	16		32	0 −25	103
TRF20UU	TRF20GUU	5	20	0 −18	40		118
TRF25UU	TRF25GUU	6	25		45		165
TRF30UU	TRF30GUU	6	30		52	0 −30	182
TRF35UU	TRF35GUU	6	35	0 −21	60		200
TRF40UU	TRF40GUU	6	40		65		230
TRF50UU	TRF50GUU	6	50		85	0 −35	290
TRF60UU	TRF60GUU	6	60	0/−25	100		310

* UU type is standard.
** Outer cylinder is treated with electroless nickel plating.
*** TRF6~8: A-M6x1 TRF10~30: A-M6F TRF35~60: A-R1/8

Df mm	t mm	flange P.C.D. mm	X×Y×Z mm	grease fitting G mm	eccentricity μm	perpendicularity μm	basic load rating dynamic C N	basic load rating static Co N	allowable static moment Mo N・m	mass g	shaft diameter mm
32	5	24	3.5×6×3.1	20.5	20	20	323	530	8.2	66	6
40	6	29	4.5×7.5×4.1	29			431	784	16.0	135	8
43	6	33	4.5×7.5×4.1	38			588	1,100	27.0	205	10
46	6	36	4.5×7.5×4.1	41			813	1,570	40.1	248	12
48	6	38	4.5×7.5×4.1	45			813	1,570	42.9	308	13
54	8	43	5.5×9×5.1	51	25	25	1,230	2,350	73.5	412	16
62	8	51	5.5×9×5.1	59			1,400	2,740	98.0	752	20
74	10	60	6.6×11×6.1	82.5			1,560	3,140	157	1,244	25
82	10	67	6.6×11×6.1	91			2,490	5,490	297	1,636	30
96	13	78	9×14×8.1	100	30	30	2,650	6,270	373	2,580	35
101	13	83	9×14×8.1	115			3,430	8,040	553	2,950	40
129	18	107	11×17×11.1	145			6,080	15,900	1,370	6,860	50
144	18	122	11×17×11.1	155			7,550	20,000	1,800	9,660	60

1N≒0.102kgf 1N・m≒0.102kgf・m

www.bergab.ru Берг АБ bergab@ya.ru Тел. (495)-228-06-21, факс (495) 223-3071

www.bergab.ru Берг АБ bergab@ya.ru Тел. (495)-228-06-21, факс (495) 223-3071

TRK TYPE

– Triple-Wide Square Flange Type –

part number structure

example **TRK 25 G UU - Q**

- TRK type
- inner contact diameter (dr)
- retainer material
  blank: steel
  G: resin
- seals on both sides
- grease fitting
  blank: without
  Q: grease fitting

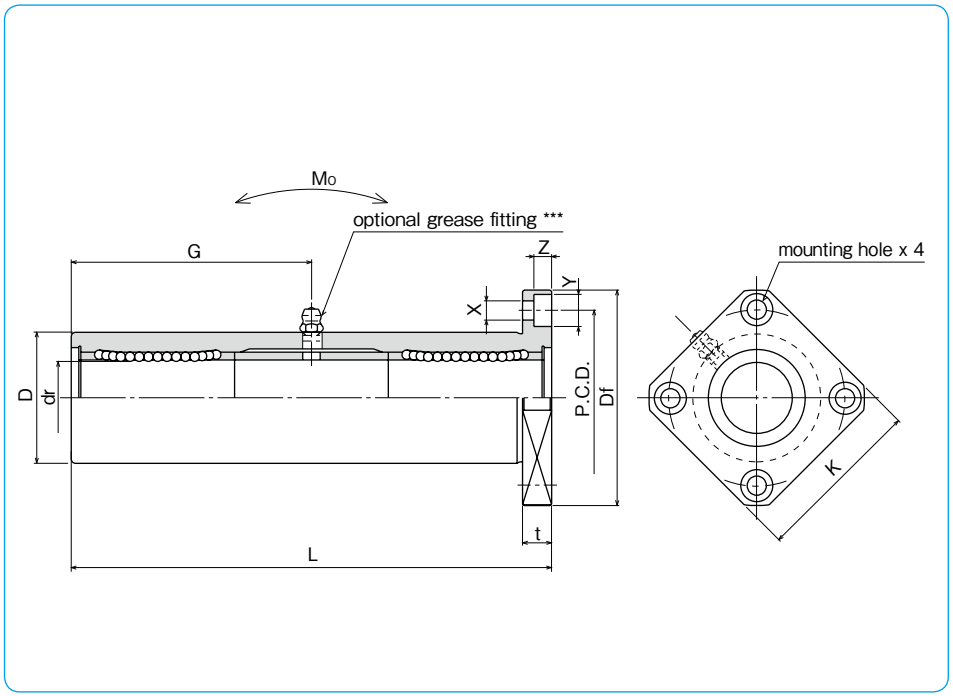

part number* steel retainer	part number* resin retainer	number of ball circuits	dr mm	dr tolerance μm	D mm	D tolerance μm	L ±0.3 mm
TRK 6UU	TRK 6GUU	4	6	0 −12	15	0/−18	51
TRK 8UU	TRK 8GUU	4	8		19	0 −21	66
TRK10UU	TRK10GUU	4	10		23		80
TRK12UU	TRK12GUU	4	12	0 −15	26		84
TRK13UU	TRK13GUU	4	13		28		90
TRK16UU	TRK16GUU	4	16		32	0 −25	103
TRK20UU	TRK20GUU	5	20	0 −18	40		118
TRK25UU	TRK25GUU	6	25		45		165
TRK30UU	TRK30GUU	6	30		52	0 −30	182
TRK35UU	TRK35GUU	6	35	0 −21	60		200
TRK40UU	TRK40GUU	6	40		65		230
TRK50UU	TRK50GUU	6	50		85	0	290
TRK60UU	TRK60GUU	6	60	0/−25	100	−35	310

* UU type is standard.
** Outer cylinder is treated with electroless nickel plating.
*** TRK6~8: A-M6x1 TRK10~30: A-M6F TRK35~60: A-R1/8

flange Df mm	flange K mm	flange t mm	flange P.C.D. mm	flange X×Y×Z mm	grease fitting G mm	eccentricity μm	perpendicularity μm	basic load rating dynamic C N	basic load rating static Co N	allowable static moment Mo N・m	mass g	shaft diameter mm
32	25	5	24	3.5×6×3.1	20.5	20	20	323	530	8.2	58	6
40	30	6	29	4.5×7.5×4.1	29			431	784	16.0	117	8
43	34	6	33	4.5×7.5×4.1	38			588	1,100	27.0	189	10
46	35	6	36	4.5×7.5×4.1	41			813	1,570	40.1	228	12
48	37	6	38	4.5×7.5×4.1	45			813	1,570	42.9	286	13
54	42	8	43	5.5×9×5.1	51	25	25	1,230	2,350	73.5	376	16
62	50	8	51	5.5×9×5.1	59			1,400	2,740	98.0	714	20
74	58	10	60	6.6×11×6.1	82.5			1,560	3,140	157	1,163	25
82	64	10	67	6.6×11×6.1	91			2,490	5,490	297	1,543	30
96	75	13	78	9×14×8.1	100	30	30	2,650	6,270	373	2,400	35
101	80	13	83	9×14×8.1	115			3,430	8,040	553	2,510	40
129	100	18	107	11×17×11.1	145			6,080	15,900	1,370	6,400	50
144	116	18	122	11×17×11.1	155			7,550	20,000	1,800	9,200	60

1N≒0.102kgf 1N・m≒0.102kgf・m

www.bergab.ru Берг АБ bergab@ya.ru Тел. (495)-228-06-21, факс (495) 223-3071

www.bergab.ru Берг АБ bergab@ya.ru Тел. (495)-228-06-21, факс (495) 223-3071

TRFC TYPE

— Triple-Wide Intermediate Position Round Flange Type —

part number structure

example **TRFC 25 G UU - Q**

- TRFC type
- inner contact diameter (dr)
- retainer material
  blank: steel
  G: resin
- seals on both sides
- grease fitting
  blank: without
  Q: grease fitting

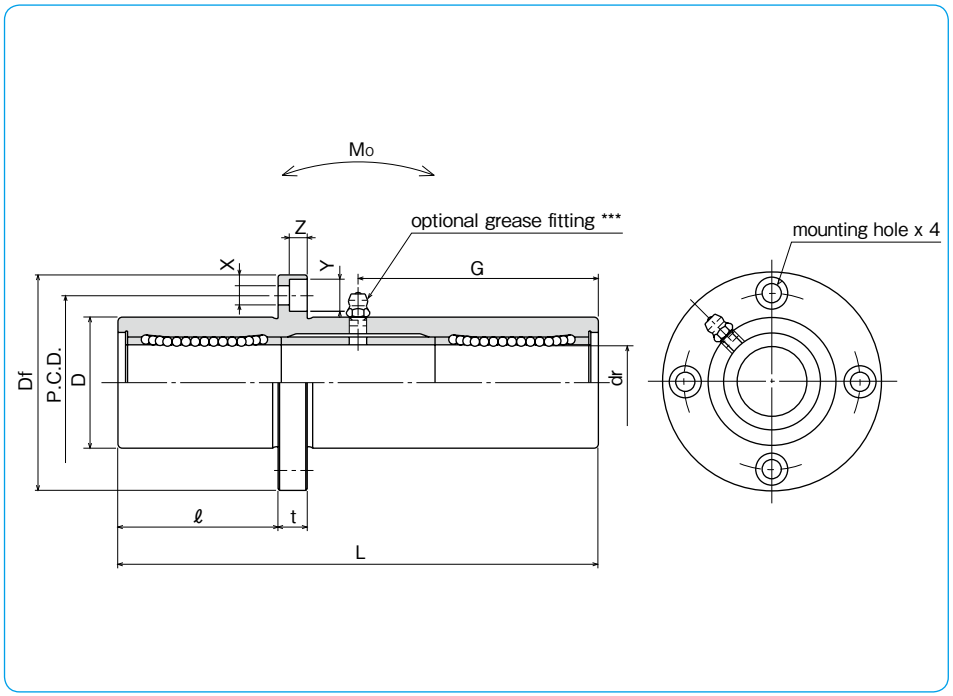

part number* steel retainer	part number* resin retainer	number of ball circuits	dr mm	dr tolerance μm	D mm	D tolerance μm	L ±0.3 mm
TRFC 6UU	TRFC 6GUU	4	6	0 −12	15	0/−18	51
TRFC 8UU	TRFC 8GUU	4	8		19	0 −21	66
TRFC10UU	TRFC10GUU	4	10		23		80
TRFC12UU	TRFC12GUU	4	12	0 −15	26		84
TRFC13UU	TRFC13GUU	4	13		28		90
TRFC16UU	TRFC16GUU	4	16		32	0 −25	103
TRFC20UU	TRFC20GUU	5	20	0 −18	40		118
TRFC25UU	TRFC25GUU	6	25		45		165
TRFC30UU	TRFC30GUU	6	30		52	0 −30	182
TRFC35UU	TRFC35GUU	6	35	0 −21	60		200
TRFC40UU	TRFC40GUU	6	40		65		230
TRFC50UU	TRFC50GUU	6	50		85	0 −35	290
TRFC60UU	TRFC60GUU	6	60	0/−25	100		310

* UU type is standard.
** Outer cylinder is treated with electroless nickel plating.
*** TRFC6~8: A-M6x1 TRFC10~30: A-M6F TRFC35~60: A-R1/8

flange ℓ mm	flange Df mm	flange t mm	flange P.C.D. mm	flange X×Y×Z mm	grease fitting G mm	eccentricity μm	perpendicularity μm	basic load rating dynamic C N	basic load rating static Co N	allowable static moment Mo N・m	mass g	shaft diameter mm
17	32	5	24	3.5×6×3.1	20.5	20	20	323	530	8.2	66	6
22	40	6	29	4.5×7.5×4.1	29			431	784	16.0	135	8
27	43	6	33	4.5×7.5×4.1	38			588	1,100	27.0	205	10
28	46	6	36	4.5×7.5×4.1	41			813	1,570	40.1	248	12
30	48	6	38	4.5×7.5×4.1	45			813	1,570	42.9	308	13
35	54	8	43	5.5×9×5.1	51	25	25	1,230	2,350	73.5	412	16
40	62	8	51	5.5×9×5.1	59			1,400	2,740	98.0	752	20
55	74	10	60	6.6×11×6.1	82.5			1,560	3,140	157	1,244	25
61	82	10	67	6.6×11×6.1	91			2,490	5,490	297	1,636	30
67	96	13	78	9×14×8.1	100	30	30	2,650	6,270	373	2,580	35
77	101	13	83	9×14×8.1	115			3,430	8,040	553	2,950	40
97	129	18	107	11×17×11.1	145			6,080	15,900	1,370	6,860	50
104	144	18	122	11×17×11.1	155			7,550	20,000	1,800	9,660	60

1N≒0.102kgf 1N・m≒0.102kgf・m

www.bergab.ru Берг АБ bergab@ya.ru Тел. (495)-228-06-21, факс (495) 223-3071

www.bergab.ru Берг АБ bergab@ya.ru Тел. (495)-228-06-21, факс (495) 223-3071

TRKC TYPE

— Triple-Wide Intermediate Position Square Flange Type —

part number structure

example **TRKC 25 G UU - Q**

- TRKC type
- inner contact diameter (dr)
- retainer material
  blank: steel
  G: resin
- seals on both sides
- grease fitting
  blank: without
  Q: grease fitting

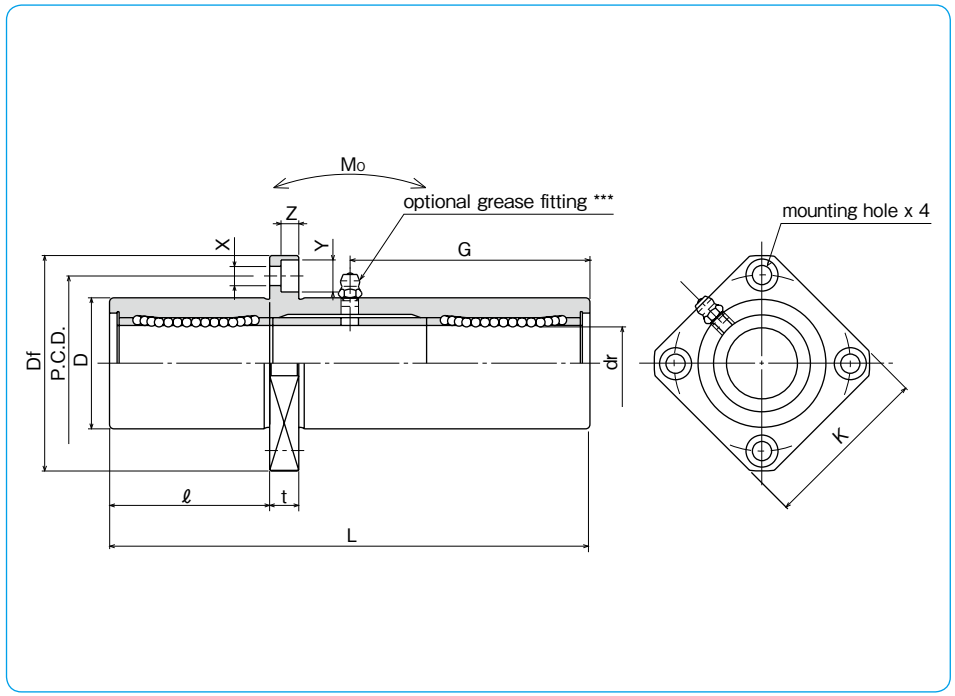

part number* steel retainer	part number* resin retainer	number of ball circuits	dr mm	dr tolerance μm	D mm	D tolerance μm	L ±0.3 mm
TRKC 6UU	TRKC 6GUU	4	6	0 −12	15	0/−18	51
TRKC 8UU	TRKC 8GUU	4	8		19	0 −21	66
TRKC10UU	TRKC10GUU	4	10		23		80
TRKC12UU	TRKC12GUU	4	12	0 −15	26		84
TRKC13UU	TRKC13GUU	4	13		28		90
TRKC16UU	TRKC16GUU	4	16		32	0 −25	103
TRKC20UU	TRKC20GUU	5	20	0 −18	40		118
TRKC25UU	TRKC25GUU	6	25		45		165
TRKC30UU	TRKC30GUU	6	30		52	0 −30	182
TRKC35UU	TRKC35GUU	6	35	0 −21	60		200
TRKC40UU	TRKC40GUU	6	40		65		230
TRKC50UU	TRKC50GUU	6	50		85	0 −35	290
TRKC60UU	TRKC60GUU	6	60	0/−25	100		310

* UU type is standard.
** Outer cylinder is treated with electroless nickel plating.
*** TRKC6~8: A-M6x1 TRKC10~30: A-M6F TRKC35~60: A-R1/8

flange ℓ mm	flange Df mm	flange K mm	flange t mm	flange P.C.D. mm	flange X×Y×Z mm	grease fitting G mm	eccentricity μm	perpendicularity μm	basic load rating dynamic C N	basic load rating static Co N	allowable static moment Mo N・m	mass g	shaft diameter mm
17	32	25	5	24	3.5×6×3.1	20.5	20	20	323	530	8.2	58	6
22	40	30	6	29	4.5×7.5×4.1	29			431	784	16.0	117	8
27	43	34	6	33	4.5×7.5×4.1	38			588	1,100	27.0	189	10
28	46	35	6	36	4.5×7.5×4.1	41			813	1,570	40.1	228	12
30	48	37	6	38	4.5×7.5×4.1	45			813	1,570	42.9	286	13
35	54	42	8	43	5.5×9×5.1	51	25	25	1,230	2,350	73.5	376	16
40	62	50	8	51	5.5×9×5.1	59			1,400	2,740	98.0	714	20
55	74	58	10	60	6.6×11×6.1	82.5			1,560	3,140	157	1,163	25
61	82	64	10	67	6.6×11×6.1	91			2,490	5,490	297	1,543	30
67	96	75	13	78	9×14×8.1	100	30	30	2,650	6,270	373	2,400	35
77	101	80	13	83	9×14×8.1	115			3,430	8,040	553	2,510	40
97	129	100	18	107	11×17×11.1	145			6,080	15,900	1,370	6,400	50
104	144	116	18	122	11×17×11.1	155			7,550	20,000	1,800	9,200	60

1N≒0.102kgf 1N・m≒0.102kgf・m

www.bergab.ru Берг АБ bergab@ya.ru Тел. (495)-228-06-21, факс (495) 223-3071

www.bergab.ru Берг АБ bergab@ya.ru Тел. (495)-228-06-21, факс (495) 223-3071

TRF-E TYPE

– Triple-Wide Round Flange Pilot End Type –

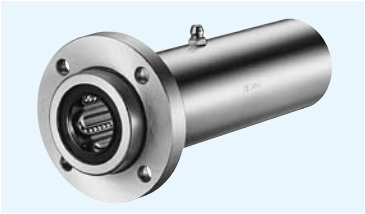

part number structure

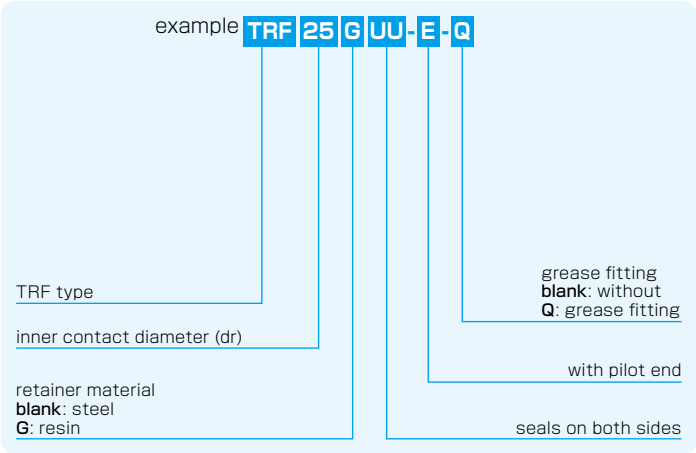

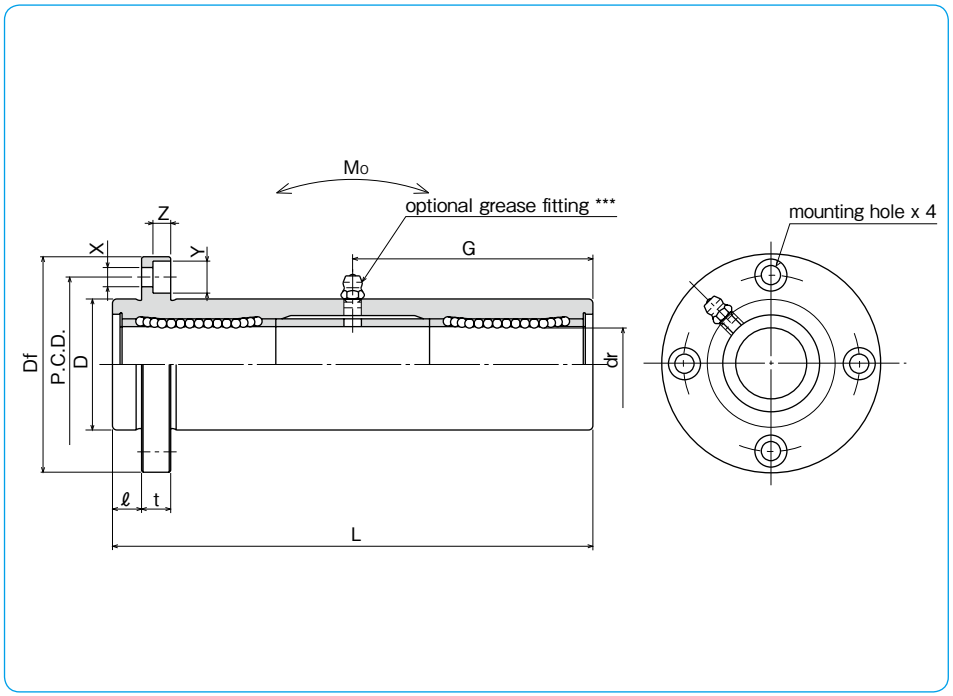

part number* steel retainer	part number* resin retainer	number of ball circuits	dr mm	dr tolerance μm	D mm	D tolerance μm	L ±0.3 mm
TRF 6UU-E	TRF 6GUU-E	4	6	0 −12	15	0/−18	51
TRF 8UU-E	TRF 8GUU-E	4	8		19	0 −21	66
TRF10UU-E	TRF10GUU-E	4	10		23		80
TRF12UU-E	TRF12GUU-E	4	12	0 −15	26		84
TRF13UU-E	TRF13GUU-E	4	13		28		90
TRF16UU-E	TRF16GUU-E	4	16		32	0 −25	103
TRF20UU-E	TRF20GUU-E	5	20	0 −18	40		118
TRF25UU-E	TRF25GUU-E	6	25		45		165
TRF30UU-E	TRF30GUU-E	6	30		52	0 −30	182
TRF35UU-E	TRF35GUU-E	6	35	0 −21	60		200
TRF40UU-E	TRF40GUU-E	6	40		65		230
TRF50UU-E	TRF50GUU-E	6	50		85	0 −35	290
TRF60UU-E	TRF60GUU-E	6	60	0/−25	100		310

* UU type is standard.
** Outer cylinder is treated with electroless nickel plating.
*** TRF6~8: A-M6x1 TRF10~30: A-M6F TRF35~60: A-R1/8

flange ℓ mm	flange Df mm	flange t mm	flange P.C.D. mm	flange X×Y×Z mm	grease fitting G mm	eccentricity μm	perpendicularity μm	basic load rating dynamic C N	basic load rating static Co N	allowable static moment Mo N・m	mass g	shaft diameter mm
5	32	5	24	3.5×6×3.1	20.5	20	20	323	530	8.2	66	6
6	40	6	29	4.5×7.5×4.1	29			431	784	16.0	135	8
6	43	6	33	4.5×7.5×4.1	38			588	1,100	27.0	205	10
6	46	6	36	4.5×7.5×4.1	41			813	1,570	40.1	248	12
6	48	6	38	4.5×7.5×4.1	45			813	1,570	42.9	308	13
8	54	8	43	5.5×9×5.1	51	25	25	1,230	2,350	73.5	412	16
8	62	8	51	5.5×9×5.1	59			1,400	2,740	98.0	752	20
10	74	10	60	6.6×11×6.1	82.5			1,560	3,140	157	1,244	25
10	82	10	67	6.6×11×6.1	91			2,490	5,490	297	1,636	30
13	96	13	78	9×14×8.1	100	30	30	2,650	6,270	373	2,580	35
13	101	13	83	9×14×8.1	115			3,430	8,040	553	2,950	40
18	129	18	107	11×17×11.1	145			6,080	15,900	1,370	6,860	50
18	144	18	122	11×17×11.1	155			7,550	20,000	1,800	9,660	60

1N≒0.102kgf 1N・m≒0.102kgf・m

www.bergab.ru Берг АБ bergab@ya.ru Тел. (495)-228-06-21, факс (495) 223-3071

www.bergab.ru Берг АБ bergab@ya.ru Тел. (495)-228-06-21, факс (495) 223-3071

TRK-E TYPE

– Triple-Wide Square Flange Pilot End Type –

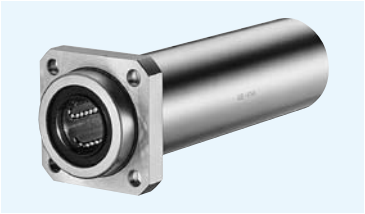

part number structure

example **TRK 25 G UU - E - Q**

- TRK type
- inner contact diameter (dr)
- retainer material
  blank: steel
  G: resin
- seals on both sides
- with pilot end
- grease fitting
  blank: without
  Q: grease fitting

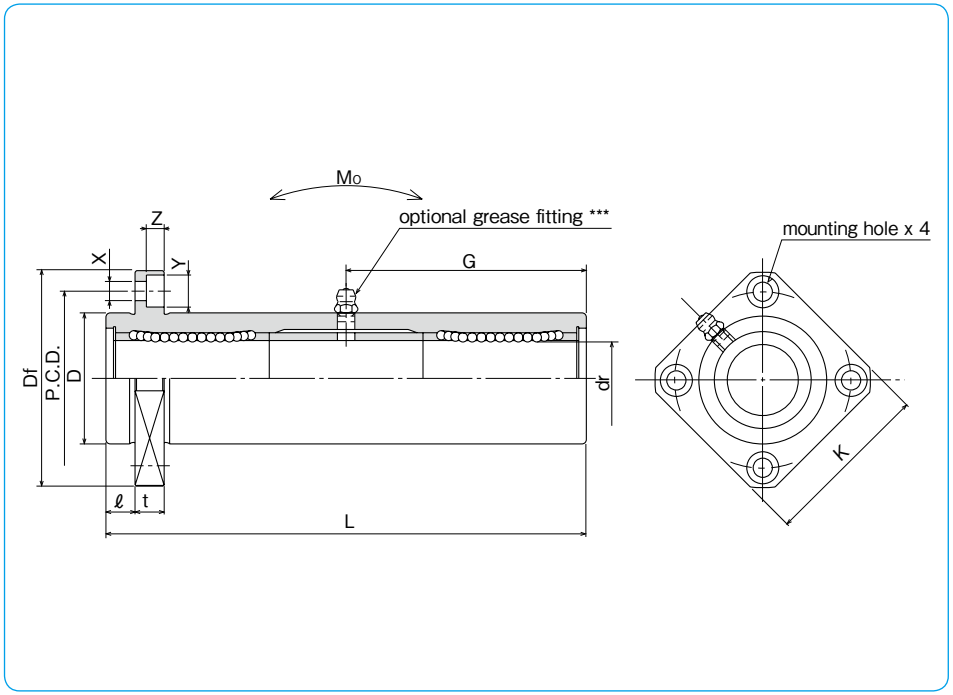

part number* steel retainer	part number* resin retainer	number of ball circuits	dr mm	dr tolerance μm	D mm	D tolerance μm	L ±0.3 mm
TRK 6UU-E	TRK 6GUU-E	4	6	0 −12	15	0/−18	51
TRK 8UU-E	TRK 8GUU-E	4	8		19	0 −21	66
TRK10UU-E	TRK10GUU-E	4	10		23		80
TRK12UU-E	TRK12GUU-E	4	12	0 −15	26		84
TRK13UU-E	TRK13GUU-E	4	13		28		90
TRK16UU-E	TRK16GUU-E	4	16		32	0 −25	103
TRK20UU-E	TRK20GUU-E	5	20	0 −18	40		118
TRK25UU-E	TRK25GUU-E	6	25		45		165
TRK30UU-E	TRK30GUU-E	6	30		52	0 −30	182
TRK35UU-E	TRK35GUU-E	6	35	0 −21	60		200
TRK40UU-E	TRK40GUU-E	6	40		65		230
TRK50UU-E	TRK50GUU-E	6	50		85	0 −35	290
TRK60UU-E	TRK60GUU-E	6	60	0/−25	100		310

* UU type is standard.
** Outer cylinder is treated with electroless nickel plating.
*** TRK6~8: A-M6x1 TRK10~30: A-M6F TRK35~60: A-R1/8

flange ℓ mm	flange Df mm	flange K mm	flange t mm	flange P.C.D. mm	flange X×Y×Z mm	grease fitting G mm	eccentricity μm	perpendicularity μm	basic load rating dynamic C N	basic load rating static Co N	allowable static moment Mo N・m	mass g	shaft diameter mm
5	32	25	5	24	3.5×6×3.1	20.5	20	20	323	530	8.2	58	6
6	40	30	6	29	4.5×7.5×4.1	29			431	784	16.0	117	8
6	43	34	6	33	4.5×7.5×4.1	38			588	1,100	27.0	189	10
6	46	35	6	36	4.5×7.5×4.1	41			813	1,570	40.1	228	12
6	48	37	6	38	4.5×7.5×4.1	45			813	1,570	42.9	286	13
8	54	42	8	43	5.5×9×5.1	51	25	25	1,230	2,350	73.5	376	16
8	62	50	8	51	5.5×9×5.1	59			1,400	2,740	98.0	714	20
10	74	58	10	60	6.6×11×6.1	82.5			1,560	3,140	157	1,163	25
10	82	64	10	67	6.6×11×6.1	91			2,490	5,490	297	1,543	30
13	96	75	13	78	9×14×8.1	100	30	30	2,650	6,270	373	2,400	35
13	101	80	13	83	9×14×8.1	115			3,430	8,040	553	2,510	40
18	129	100	18	107	11×17×11.1	145			6,080	15,900	1,370	6,400	50
18	144	116	18	122	11×17×11.1	155			7,550	20,000	1,800	9,200	60

1N≒0.102kgf 1N・m≒0.102kgf・m

www.bergab.ru Берг АБ bergab@ya.ru Тел. (495)-228-06-21, факс (495) 223-3071

www.bergab.ru Берг АБ bergab@ya.ru Тел. (495)-228-06-21, факс (495) 223-3071

KB TYPE (Euro Standard)

– Standard Type –

part number structure

example **KBS 25 G UU**

specification
KB: standard
KBS: anti-corrosion

inner contact diameter (dr)

retainer material
blank: standard/steel
anti-corrosion/stainless steel
G: resin

seal
blank: without seal
U: seal on one side
UU: seals on both sides

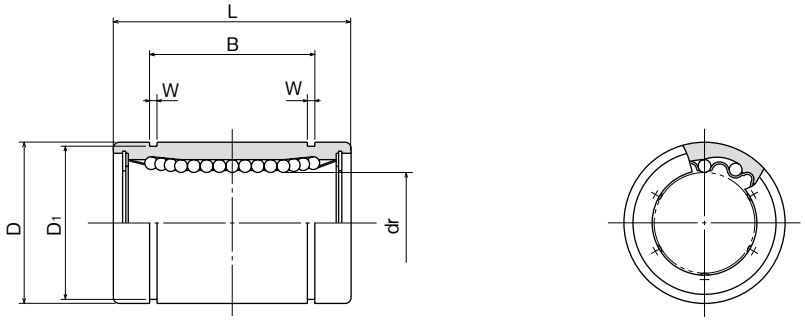

part number				number of ball circuits	major dimensions																	
standard		anti-corrosion			dr		D		L		B		W	D1	eccentricity	radial clearance (maximum)	basic load rating dynamic	basic load rating static	mass	shaft diameter
steel retainer	resin retainer	stainless retainer	resin retainer		mm	tolerance μm	mm	tolerance μm	mm	tolerance mm	mm	tolerance mm	mm	mm	μm	μm	C N	Co N	g	mm
KB 3	KB 3G	KBS 3	KBS 3G	4	3	+8 / 0	7	0 / −8	10	0 / −0.12	–	–	–	–	10	−3	69	105	1.4	3
KB 4	KB 4G	KBS 4	KBS 4G	4	4		8		12		–	–	–	–			88	127	2	4
KB 5	KB 5G	KBS 5	KBS 5G	4	5		12		22	0 / −0.2	14.5	0 / −0.2	1.1	11.5	12		206	265	11	5
KB 8	KB 8G	KBS 8	KBS 8G	4	8		16		25		16.5		1.1	15.2			265	402	22	8
KB10	KB10G	KBS10	KBS10G	4	10		19	0 / −9	29		22		1.3	18		−4	372	549	36	10
KB12	KB12G	KBS12	KBS12G	4	12		22		32		22.9		1.3	21			510	784	45	12
KB16	KB16G	KBS16	KBS16G	4	16	+9 / −1	26		36		24.9		1.3	24.9			578	892	60	16
KB20	KB20G	KBS20	KBS20G	5	20		32	0 / −11	45		31.5		1.6	30.3	15	−6	862	1,370	102	20
KB25	KB25G	KBS25	KBS25G	6	25	+11 / −1	40		58	0 / −0.3	44.1	0 / −0.3	1.85	37.5			980	1,570	235	25
KB30	KB30G	KBS30	KBS30G	6	30		47		68		52.1		1.85	44.5		−8	1,570	2,740	360	30
KB40	KB40G	KBS40	KBS40G	6	40	+13 / −2	62	0 / −13	80		60.6		2.15	59	17		2,160	4,020	770	40
KB50	KB50G	KBS50	KBS50G	6	50		75		100		77.6		2.65	72		−13	3,820	7,940	1,250	50
KB60	KB60G	KBS60	KBS60G	6	60		90	0 / −15	125	0 / −0.4	101.7	0 / −0.4	3.15	86.5	20		4,700	9,800	2,220	60
KB80	–	–	–	6	80	+16/−4	120		165		133.7		4.15	116		−20	7,350	16,000	5,140	80

1N≒0.102kgf

www.bergab.ru Берг АБ bergab@ya.ru Тел. (495)-228-06-21, факс (495) 223-3071

www.bergab.ru Берг АБ bergab@ya.ru Тел. (495)-228-06-21, факс (495) 223-3071

KB-AJ TYPE (Euro Standard)

– Clearance Adjustable Type –

part number structure

example **KBS 25 G UU - AJ**

- **KBS**: specification
  - **KB**: standard
  - **KBS**: anti-corrosion
- **25**: inner contact diameter (dr)
- **G**: retainer material
  - **blank**: standard/steel
  - anti-corrosion/stainless steel
  - **G**: resin
- **UU**: seal
  - **blank**: without seal
  - **U**: seal on one side
  - **UU**: seals on both sides
- **AJ**: clearance-adjustable

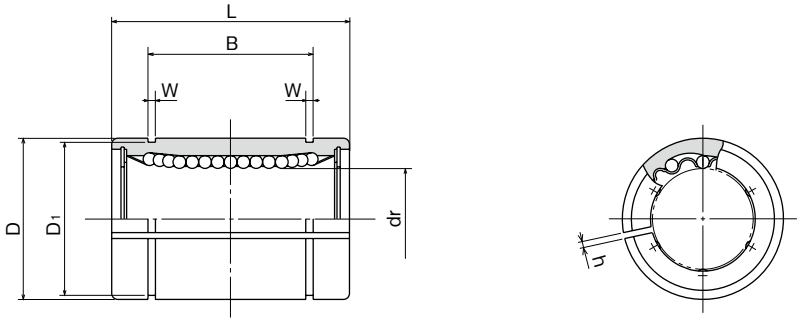

part number				number of ball circuits	major dimensions			
standard		anti-corrosion			dr		D	
steel retainer	resin retainer	stainless retainer	resin retainer		mm	tolerance* μm	mm	tolerance* μm
–	KB 5G-AJ	–	KBS 5G-AJ	4	5	+8 / 0	12	0 / −8
–	KB 8G-AJ	–	KBS 8G-AJ	4	8		16	
–	KB10G-AJ	–	KBS10G-AJ	4	10		19	0 / −9
KB12-AJ	KB12G-AJ	KBS12-AJ	KBS12G-AJ	4	12		22	
KB16-AJ	KB16G-AJ	KBS16-AJ	KBS16G-AJ	4	16	+9 / −1	26	
KB20-AJ	KB20G-AJ	KBS20-AJ	KBS20G-AJ	5	20		32	0 / −11
KB25-AJ	KB25G-AJ	KBS25-AJ	KBS25G-AJ	6	25	+11 / −1	40	
KB30-AJ	KB30G-AJ	KBS30-AJ	KBS30G-AJ	6	30		47	
KB40-AJ	KB40G-AJ	KBS40-AJ	KBS40G-AJ	6	40	+13 / −2	62	0 / −13
KB50-AJ	KB50G-AJ	KBS50-AJ	KBS50G-AJ	6	50		75	
KB60-AJ	KB60G-AJ	KBS60-AJ	KBS60G-AJ	6	60		90	0 / −15
KB80-AJ	–	–	–	6	80	+16/−4	120	

* Accuracy is measured prior to machining clearance slit.

L		B		W	D1	h	eccentricity*	basic load rating		mass	shaft diameter
								dynamic	static		
mm	tolerance mm	mm	tolerance mm	mm	mm	mm	μm	C N	Co N	g	mm
22	0 / −0.2	14.5	0 / −0.2	1.1	11.5	1	12	206	265	10	5
25		16.5		1.1	15.2	1		265	402	19.5	8
29		22		1.3	18	1		372	549	29	10
32		22.9		1.3	21	1.5		510	784	44	12
36		24.9		1.3	24.9	1.5		578	892	59	16
45		31.5		1.6	30.3	2	15	862	1,370	100	20
58	0 / −0.3	44.1	0 / −0.3	1.85	37.5	2		980	1,570	230	25
68		52.1		1.85	44.5	2		1,570	2,740	355	30
80		60.6		2.15	59	3	17	2,160	4,020	758	40
100		77.6		2.65	72	3		3,820	7,940	1,230	50
125	0 / −0.4	101.7	0 / −0.4	3.15	86.5	3	20	4,700	9,800	2,170	60
165		133.7		4.15	116	3		7,350	16,000	5,000	80

1N≒0.102kgf

www.bergab.ru Берг АБ bergab@ya.ru Тел. (495)-228-06-21, факс (495) 223-3071

www.bergab.ru Берг АБ bergab@ya.ru Тел. (495)-228-06-21, факс (495) 223-3071

KB-OP TYPE (Euro Standard)

– Open Type –

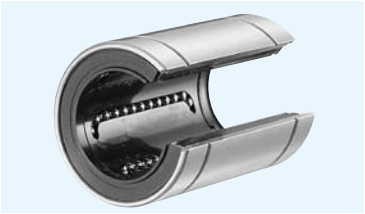

part number structure

example **KBS 25 G UU-OP**

- **KBS**: specification
  - **KB**: standard
  - **KBS**: anti-corrosion
- **25**: inner contact diameter (dr)
- **G**: retainer material
  - **blank**: standard/steel
  - anti-corrosion/stainless steel
  - **G**: resin
- **UU**: seal
  - **blank**: without seal
  - **U**: seal on one side
  - **UU**: seals on both sides
- **OP**: open type

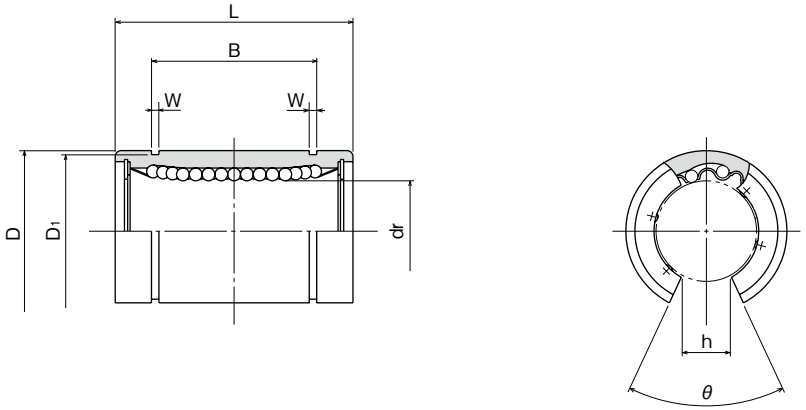

part number				number of ball circuits	major dimensions													
standard		anti-corrosion			dr		D		L		B		W	D_1	h	θ	eccentricity*	basic load rating dynamic C	basic load rating static Co	mass	shaft diameter
steel retainer	resin retainer	stainless retainer	resin retainer		mm	tolerance* μm	mm	tolerance* μm	mm	tolerance mm	mm	tolerance mm	mm	mm	mm		μm	N	N	g	mm
–	KB10G-OP	–	KBS10G-OP	3	10	+8	19	0 −9	29	0 −0.2	22	0 −0.2	1.3	18	6.8	80°	12	372	549	23	10
KB12-OP	KB12G-OP	KBS12-OP	KBS12G-OP	3	12	0	22		32		22.9		1.3	21	7.5	78°		510	784	35	12
KB16-OP	KB16G-OP	KBS16-OP	KBS16G-OP	3	16	+9 −1	26		36		24.9		1.3	24.9	10	78°		578	892	48	16
KB20-OP	KB20G-OP	KBS20-OP	KBS20G-OP	4	20		32	0 −11	45		31.5		1.6	30.3	10	60°	15	862	1,370	84	20
KB25-OP	KB25G-OP	KBS25-OP	KBS25G-OP	5	25	+11 −1	40		58	0 −0.3	44.1	0 −0.3	1.85	37.5	12.5	60°		980	1,570	195	25
KB30-OP	KB30G-OP	KBS30-OP	KBS30G-OP	5	30		47		68		52.1		1.85	44.5	12.5	50°		1,570	2,740	309	30
KB40-OP	KB40G-OP	KBS40-OP	KBS40G-OP	5	40	+13 −2	62	0 −13	80		60.6		2.15	59	16.8	50°	17	2,160	4,020	665	40
KB50-OP	KB50G-OP	KBS50-OP	KBS50G-OP	5	50		75		100		77.6		2.65	72	21	50°		3,820	7,940	1,080	50
KB60-OP	KB60G-OP	KBS60-OP	KBS60G-OP	5	60		90	0 −15	125	0 −0.4	101.7	0 −0.4	3.15	86.5	27.2	54°	20	4,700	9,800	1,900	60
KB80-OP	–	–	–	5	80	+16/−4	120		165		133.7		4.15	116	36.3	54°		7,350	16,000	4,380	80

* Accuracy is measured prior to machining open slit.

1N≒0.102kgf

www.bergab.ru Берг АБ bergab@ya.ru Тел. (495)-228-06-21, факс (495) 223-3071

www.bergab.ru Берг АБ bergab@ya.ru Тел. (495)-228-06-21, факс (495) 223-3071

KB-W TYPE (Euro Standard)

– Double-Wide Type –

part number structure

example **KBS 25 G W UU**

specification
KB: standard
KBS: anti-corrosion

inner contact diameter (dr)

retainer material
blank: standard/steel
anti-corrosion/stainless steel
G: resin

double-wide type

seal
blank: without seal
UU: seals on both sides

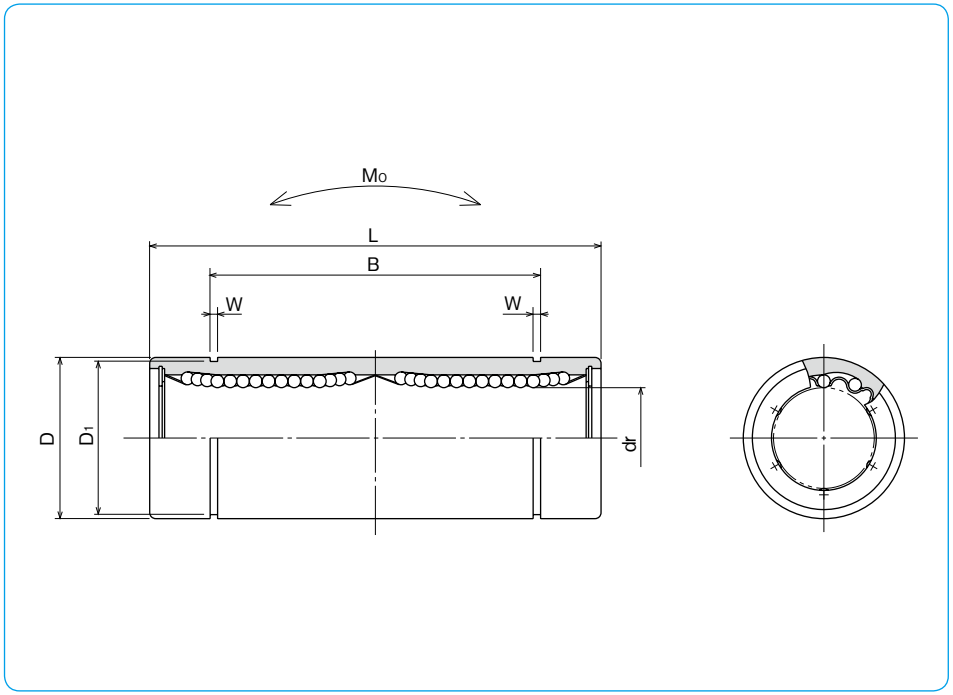

part number				number of ball circuits	major dimensions																
standard		anti-corrosion			dr		D		L		B		W	D1	eccentricity	basic load rating		allowable	mass	shaft
steel retainer	resin retainer	stainless retainer	resin retainer		mm	tolerance μm	mm	tolerance μm	mm	tolerance mm	mm	tolerance mm	mm	mm	μm	dynamic C N	static Co N	static moment Mo N・m	g	diameter mm
KB 8W	KB 8GW	KBS 8W	KBS 8GW	4	8	+9 −1	16	0/−9	46	0 −0.3	33	0 −0.3	1.1	15.2	15	421	804	4.3	40	8
KB12W	KB12GW	KBS12W	KBS12GW	4	12		22	0 −11	61		45.8		1.3	21		813	1,570	11.7	80	12
KB16W	KB16GW	KBS16W	KBS16GW	4	16	+11 −1	26		68		49.8		1.3	24.9		921	1,780	14.2	115	16
KB20W	KB20GW	KBS20W	KBS20GW	5	20		32	0 −13	80		61		1.6	30.5	17	1,370	2,740	25.0	180	20
KB25W	KB25GW	KBS25W	KBS25GW	6	25	+13 −2	40		112	0 −0.4	82	0 −0.4	1.85	38		1,570	3,140	44.0	430	25
KB30W	KB30GW	KBS30W	KBS30GW	6	30		47		123		104.2		1.85	44.5		2,500	5,490	78.9	615	30
KB40W	KB40GW	KBS40W	KBS40GW	6	40	+16 −4	62	0 −15	151		121.2		2.15	59	20	3,430	8,040	147	1,400	40
KB50W	KB50GW	KBS50W	KBS50GW	6	50		75		192		155.2		2.65	72		6,080	15,900	396	2,320	50
KB60W	KB60GW	KBS60W	KBS60GW	6	60		90	0/−20	209		170		3.15	86.5	25	7,550	20,000	487	3,920	60

1N≒0.102kgf 1N・m≒0.102kgf・m

www.bergab.ru Берг АБ bergab@ya.ru Тел. (495)-228-06-21, факс (495) 223-3071

www.bergab.ru Берг АБ bergab@ya.ru Тел. (495)-228-06-21, факс (495) 223-3071

KBF TYPE (Euro Standard)

— Round Flange Type —

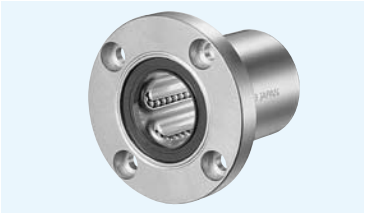

part number structure

example **KBSF 25 G UU-SK**

specification
KBF: standard
KBSF: anti-corrosion

inner contact diameter (dr)

retainer material
blank: standard/steel
anti-corrosion/stainless steel
G: resin

seal
blank: without seal
UU: seals on both sides

outer cylinder
surface treatment
blank: no surface treatment
SK: electroless nickel plating
LF: low temperature black chrome treatment with fluoride coating
SB: black oxide (not available on anti-corrosion type)
SC: industrial chrome plating

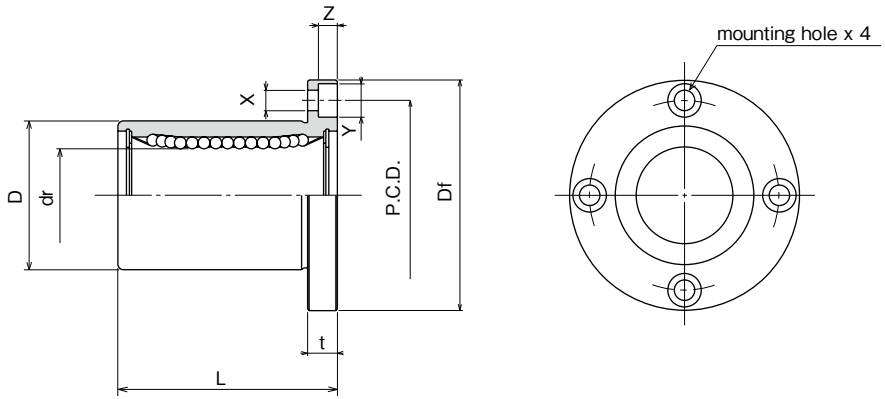

part number				number of ball circuits	major dimensions				
standard		anti-corrosion			dr		D		L
steel retainer	resin retainer	stainless retainer	resin retainer		mm	tolerance μm	mm	tolerance μm	±0.3 mm
—	KBF 5G	—	KBSF 5G	4	5	+8 / 0	12	0 / −13	22
KBF 8	KBF 8G	KBSF 8	KBSF 8G	4	8		16		25
KBF12	KBF12G	KBSF12	KBSF12G	4	12		22	0 / −16	32
KBF16	KBF16G	KBSF16	KBSF16G	4	16	+9 / −1	26		36
KBF20	KBF20G	KBSF20	KBSF20G	5	20		32	0 / −19	45
KBF25	KBF25G	KBSF25	KBSF25G	6	25	+11 / −1	40		58
KBF30	KBF30G	KBSF30	KBSF30G	6	30		47		68
KBF40	KBF40G	KBSF40	KBSF40G	6	40	+13 / −2	62	0 / −22	80
KBF50	KBF50G	KBSF50	KBSF50G	6	50		75		100
KBF60	KBF60G	KBSF60	KBSF60G	6	60		90	0 / −25	125
KBF80	—	—	—	6	80	+16/−4	120		165

Df mm	t mm	flange P.C.D. mm	X×Y×Z mm	eccentricity μm	perpendicularity μm	basic load rating dynamic C N	static Co N	mass g	shaft diameter mm
28	5	20	3.5×6×3.1	12	12	206	265	26	5
32	5	24	3.5×6×3.1			265	402	41	8
42	6	32	4.5×7.5×4.1			510	784	80	12
46	6	36	4.5×7.5×4.1			578	892	103	16
54	8	43	5.5×9×5.1	15	15	862	1,370	182	20
62	8	51	5.5×9×5.1			980	1,570	335	25
76	10	62	6.6×11×6.1			1,570	2,740	560	30
98	13	80	9×14×8.1	17	17	2,160	4,020	1,175	40
112	13	94	9×14×8.1			3,820	7,940	1,745	50
134	18	112	11×17×11.1	20	20	4,700	9,800	3,220	60
164	18	142	11×17×11.1			7,350	16,000	6,420	80

1N≒0.102kgf

www.bergab.ru Берг АБ bergab@ya.ru Тел. (495)-228-06-21, факс (495) 223-3071

www.bergab.ru Берг АБ bergab@ya.ru Тел. (495)-228-06-21, факс (495) 223-3071

KBK TYPE (Euro Standard)

– Square Flange Type –

part number structure

example **KBSK 25 G UU-SK**

specification
KBK: standard
KBSK: anti-corrosion

inner contact diameter (dr)

retainer material
blank: standard/steel
anti-corrosion/stainless steel
G: resin

outer cylinder
surface treatment
blank: no surface treatment
SK: electroless nickel plating
LF: low temperature black chrome treatment with fluoride coating
SB: black oxide (not available on anti-corrosion type)
SC: industrial chrome plating

seal
blank: without seal
UU: seals on both sides

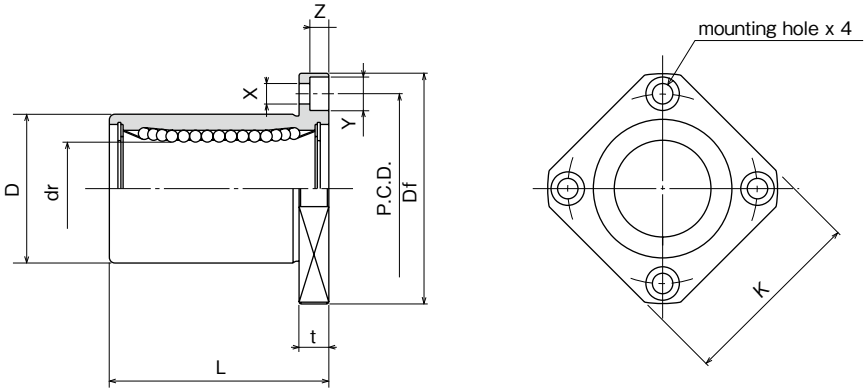

part number				number of ball circuits	major dimensions				
standard		anti-corrosion			dr		D		L
steel retainer	resin retainer	stainless retainer	resin retainer		mm	tolerance μm	mm	tolerance μm	±0.3 mm
–	KBK 5G	–	KBSK 5G	4	5	+8 / 0	12	0 / −13	22
KBK 8	KBK 8G	KBSK 8	KBSK 8G	4	8		16		25
KBK12	KBK12G	KBSK12	KBSK12G	4	12		22	0 / −16	32
KBK16	KBK16G	KBSK16	KBSK16G	4	16	+9 / −1	26		36
KBK20	KBK20G	KBSK20	KBSK20G	5	20		32	0 / −19	45
KBK25	KBK25G	KBSK25	KBSK25G	6	25	+11 / −1	40		58
KBK30	KBK30G	KBSK30	KBSK30G	6	30		47		68
KBK40	KBK40G	KBSK40	KBSK40G	6	40	+13 / −2	62	0 / −22	80
KBK50	KBK50G	KBSK50	KBSK50G	6	50		75		100
KBK60	KBK60G	KBSK60	KBSK60G	6	60		90	0 / −25	125
KBK80	–	–	–	6	80	+16/−4	120		165

flange					eccentricity	perpendicularity	basic load rating		mass	shaft diameter
Df mm	K mm	t mm	P.C.D. mm	X×Y×Z mm	μm	μm	dynamic C N	static Co N	g	mm
28	22	5	20	3.5×6×3.1	12	12	206	265	20	5
32	25	5	24	3.5×6×3.1			265	402	33	8
42	32	6	32	4.5×7.5×4.1			510	784	64	12
46	35	6	36	4.5×7.5×4.1			578	892	90	16
54	42	8	43	5.5×9×5.1	15	15	862	1,370	147	20
62	50	8	51	5.5×9×5.1			980	1,570	295	25
76	60	10	62	6.6×11×6.1			1,570	2,740	465	30
98	75	13	80	9×14×8.1	17	17	2,160	4,020	975	40
112	88	13	94	9×14×8.1			3,820	7,940	1,545	50
134	106	18	112	11×17×11.1	20	20	4,700	9,800	2,780	60
164	136	18	142	11×17×11.1			7,350	16,000	5,920	80

1N≒0.102kgf

www.bergab.ru Берг АБ bergab@ya.ru Тел. (495)-228-06-21, факс (495) 223-3071

www.bergab.ru Берг АБ bergab@ya.ru Тел. (495)-228-06-21, факс (495) 223-3071

KBT TYPE (Euro Standard)

— Two Side Cut Flange Type —

part number structure

example **KBST 25 G UU-SK**

- **KBST**: specification
  - **KBT**: standard
  - **KBST**: anti-corrosion
- **25**: inner contact diameter (dr)
- **G**: retainer material
  - **blank**: standard/steel
  - anti-corrosion/stainless steel
  - **G**: resin
- **UU**: seals on both sides
- **SK**: outer cylinder surface treatment
  - **blank**: no surface treatment
  - **SK**: electroless nickel plating
  - **LF**: low temperature black chrome treatment with fluoride coating
  - **SB**: black oxide (not available on anti-corrosion type)
  - **SC**: industrial chrome plating

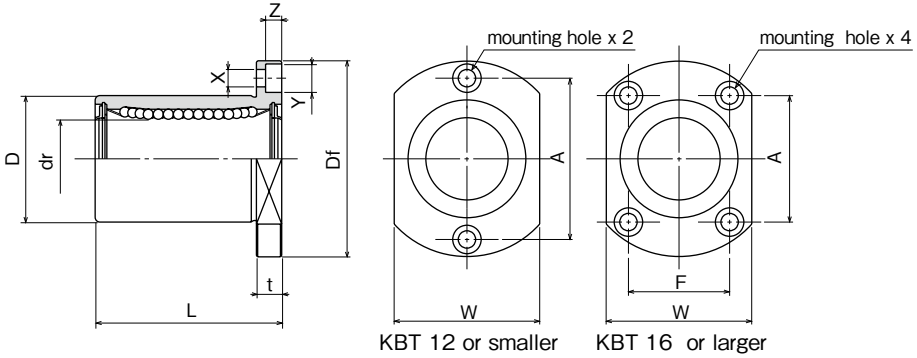

part number				number of ball circuits	major dimensions				
standard		anti-corrosion			dr		D		L
steel retainer	resin retainer	stainless retainer	resin retainer		mm	tolerance μm	mm	tolerance μm	±0.3 mm
KBT 5 UU	KBT 5G UU	KBST 5 UU	KBST 5G UU	4	5	+8 / 0	12	0 / −13	22
KBT 8 UU	KBT 8G UU	KBST 8 UU	KBST 8G UU	4	8		16		25
KBT12 UU	KBT12G UU	KBST12 UU	KBST12G UU	4	12		22	0 / −16	32
KBT16 UU	KBT16G UU	KBST16 UU	KBST16G UU	4	16	+9 / −1	26		36
KBT20 UU	KBT20G UU	KBST20 UU	KBST20G UU	5	20		32	0 / −19	45
KBT25 UU	KBT25G UU	KBST25 UU	KBST25G UU	6	25	+11 / −1	40		58
KBT30 UU	KBT30G UU	KBST30 UU	KBST30G UU	6	30		47		68

* UU type is standard.

flange						eccentricity	perpendicularity	basic load rating		mass	shaft diameter
Df	W	t	A	F	X×Y×Z			dynamic C	static Co		
mm	mm	mm	mm	mm	mm	μm	μm	N	N	g	mm
28	18	5	20	—	3.5×6×3.1	12	12	206	265	25	5
32	22	5	24	—	3.5×6×3.1			265	402	37	8
42	28	6	32	—	4.5×7.5×4.1			510	784	73	12
46	32	6	28	22	4.5×7.5×4.1			578	892	90	16
54	38	8	36	24	5.5×9×5.1	15	15	862	1,370	155	20
62	46	8	40	32	5.5×9×5.1			980	1,570	295	25
76	53	10	48	36	6.6×11×6.1			1,570	2,740	471	30

1N≒0.102kgf

www.bergab.ru Берг АБ bergab@ya.ru Тел. (495)-228-06-21, факс (495) 223-3071

www.bergab.ru Берг АБ bergab@ya.ru Тел. (495)-228-06-21, факс (495) 223-3071

KBF-W TYPE (Euro Standard)

— Round Flange Double-Wide Type —

part number structure

example **KBSF 25 G W UU - SK**

- specification
  - **KBF**: standard
  - **KBSF**: anti-corrosion
- inner contact diameter (dr)
- retainer material
  - **blank**: standard/steel
  - anti-corrosion/stainless steel
  - **G**: resin
- double-wide type
- seal
  - **blank**: without seal
  - **UU**: seals on both sides
- outer cylinder surface treatment
  - **blank**: no surface treatment
  - **SK**: electroless nickel plating
  - **LF**: low temperature black chrome treatment with fluoride coating
  - **SB**: black oxide (not available on anti-corrosion type)
  - **SC**: industrial chrome plating

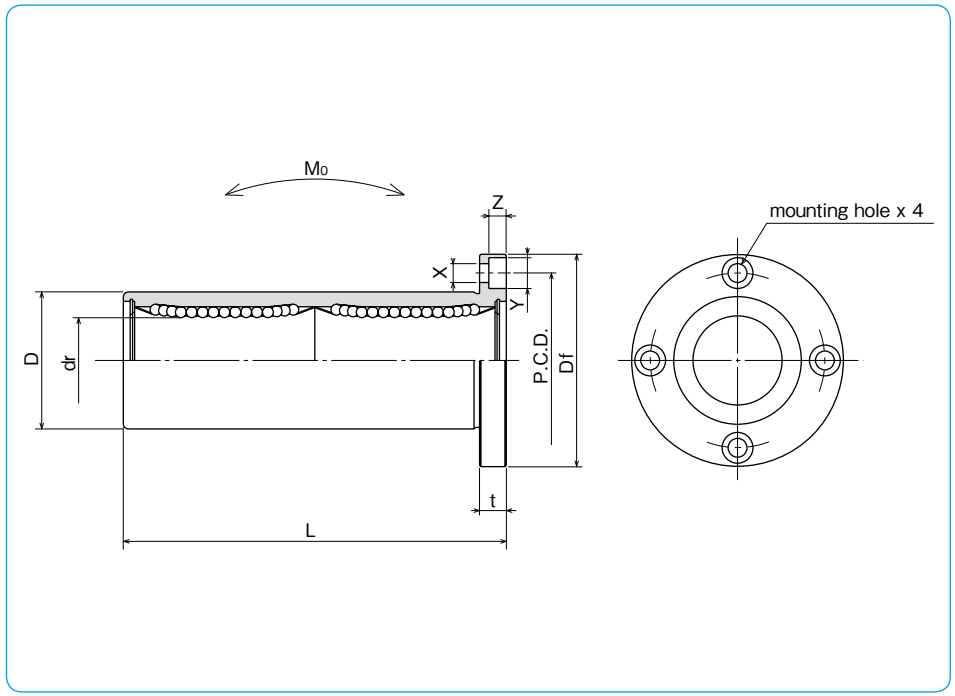

part number: standard, steel retainer	part number: standard, resin retainer	part number: anti-corrosion, stainless retainer	part number: anti-corrosion, resin retainer	number of ball circuits	major dimensions: dr mm	dr tolerance μm	D mm	D tolerance μm	L ±0.3 mm
KBF 8W	KBF 8GW	KBSF 8W	KBSF 8GW	4	8	+ 9	16	0/−13	46
KBF12W	KBF12GW	KBSF12W	KBSF12GW	4	12	− 1	22	0	61
KBF16W	KBF16GW	KBSF16W	KBSF16GW	4	16	+11	26	−16	68
KBF20W	KBF20GW	KBSF20W	KBSF20GW	5	20	− 1	32	0	80
KBF25W	KBF25GW	KBSF25W	KBSF25GW	6	25	+13	40	−19	112
KBF30W	KBF30GW	KBSF30W	KBSF30GW	6	30	− 2	47		123
KBF40W	KBF40GW	KBSF40W	KBSF40GW	6	40	+16	62	0	151
KBF50W	KBF50GW	KBSF50W	KBSF50GW	6	50	− 4	75	−22	192
KBF60W	KBF60GW	KBSF60W	KBSF60GW	6	60		90	0/−25	209

flange Df mm	t mm	P.C.D. mm	X×Y×Z mm	eccentricity μm	perpendicularity μm	basic load rating dynamic C N	static Co N	allowable static moment Mo N・m	mass g	shaft diameter mm
32	5	24	3.5×6×3.1	15	15	421	804	4.3	59	8
42	6	32	4.5×7.5×4.1			813	1,570	11.7	110	12
46	6	36	4.5×7.5×4.1			921	1,780	14.2	160	16
54	8	43	5.5×9×5.1	17	17	1,370	2,740	25.0	260	20
62	8	51	5.5×9×5.1			1,570	3,140	44.0	540	25
76	10	62	6.6×11×6.1			2,500	5,490	78.9	815	30
98	13	80	9×14×8.1	20	20	3,430	8,040	147	1,805	40
112	13	94	9×14×8.1			6,080	15,900	396	2,820	50
134	18	112	11×17×11.1	25	25	7,550	20,000	487	4,920	60

1N≒0.102kgf 1N・m≒0.102kgf・m

www.bergab.ru Берг АБ bergab@ya.ru Тел. (495)-228-06-21, факс (495) 223-3071

www.bergab.ru Берг АБ bergab@ya.ru Тел. (495)-228-06-21, факс (495) 223-3071

KBK-W TYPE (Euro Standard)

— Square Flange Double-Wide Type —

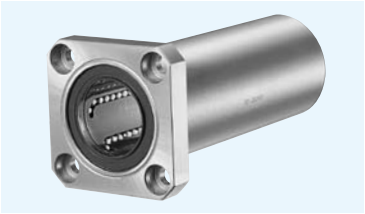

part number structure

example **KBSK 25 G W UU - SK**

- **KBSK**: specification
  - **KBK**: standard
  - **KBSK**: anti-corrosion
- **25**: inner contact diameter (dr)
- **G**: retainer material
  - **blank**: standard/steel
  - anti-corrosion/stainless steel
  - **G**: resin
- **W**: double-wide type
- **UU**: seal
  - **blank**: without seal
  - **UU**: seals on both sides
- **SK**: outer cylinder surface treatment
  - **blank**: no surface treatment
  - **SK**: electroless nickel plating
  - **LF**: low temperature black chrome treatment with fluoride coating
  - **SB**: black oxide (not available on anti-corrosion type)
  - **SC**: industrial chrome plating

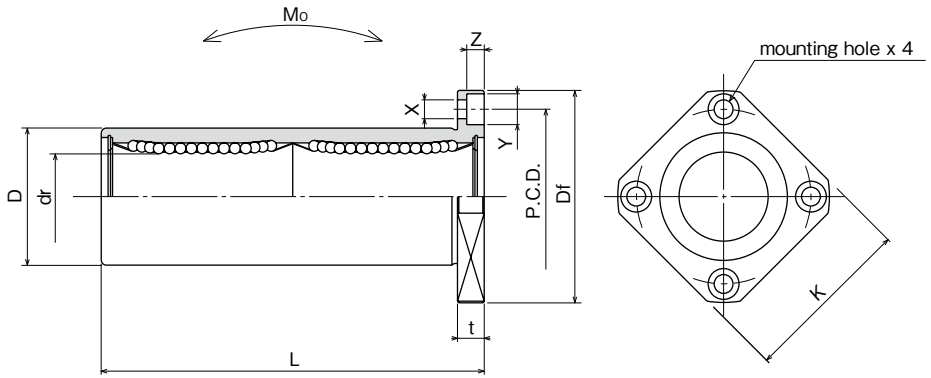

part number				number of ball circuits	major dimensions				
standard		anti-corrosion			dr		D		L
steel retainer	resin retainer	stainless retainer	resin retainer		mm	tolerance μm	mm	tolerance μm	±0.3 mm
KBK 8W	KBK 8GW	KBSK 8W	KBSK 8GW	4	8	+ 9	16	0/−13	46
KBK12W	KBK12GW	KBSK12W	KBSK12GW	4	12	− 1	22	0	61
KBK16W	KBK16GW	KBSK16W	KBSK16GW	4	16	+11	26	−16	68
KBK20W	KBK20GW	KBSK20W	KBSK20GW	5	20	− 1	32	0	80
KBK25W	KBK25GW	KBSK25W	KBSK25GW	6	25	+13	40	−19	112
KBK30W	KBK30GW	KBSK30W	KBSK30GW	6	30	− 2	47		123
KBK40W	KBK40GW	KBSK40W	KBSK40GW	6	40	+16	62	0	151
KBK50W	KBK50GW	KBSK50W	KBSK50GW	6	50	− 4	75	−22	192
KBK60W	KBK60GW	KBSK60W	KBSK60GW	6	60		90	0/−25	209

flange					eccentricity	perpendicularity	basic load rating		allowable	mass	shaft diameter
							dynamic	static	static moment		
Df mm	K mm	t mm	P.C.D. mm	X×Y×Z mm	μm	μm	C N	Co N	Mo N・m	g	mm
32	25	5	24	3.5×6×3.1	15	15	421	804	4.3	51	8
42	32	6	32	4.5×7.5×4.1			813	1,570	11.7	90	12
46	35	6	36	4.5×7.5×4.1			921	1,780	14.2	135	16
54	42	8	43	5.5×9×5.1	17	17	1,370	2,740	25.0	225	20
62	50	8	51	5.5×9×5.1			1,570	3,140	44.0	500	25
76	60	10	62	6.6×11×6.1			2,500	5,490	78.9	720	30
98	75	13	80	9×14×8.1	20	20	3,430	8,040	147	1,600	40
112	88	13	94	9×14×8.1			6,080	15,900	396	2,620	50
134	106	18	112	11×17×11.1	25	25	7,550	20,000	487	4,480	60

1N≒0.102kgf 1N・m≒0.102kgf・m

www.bergab.ru Берг АБ bergab@ya.ru Тел. (495)-228-06-21, факс (495) 223-3071

www.bergab.ru Берг АБ bergab@ya.ru Тел. (495)-228-06-21, факс (495) 223-3071

KBFC TYPE (Euro Standard)

– Center Mount Round Flange Type –

part number structure

example **KBSFC 25 G UU - SK**

specification
KBFC: standard
KBSFC: anti-corrosion

inner contact diameter (dr)

retainer material
blank: standard/steel
anti-corrosion/stainless steel
G: resin

seal
blank: without seal
UU: seals on both sides

outer cylinder
surface treatment
blank: no surface treatment
SK: electroless nickel plating
LF: low temperature black chrome treatment with fluoride coating
SB: black oxide (not available on anti-corrosion type)
SC: industrial chrome plating

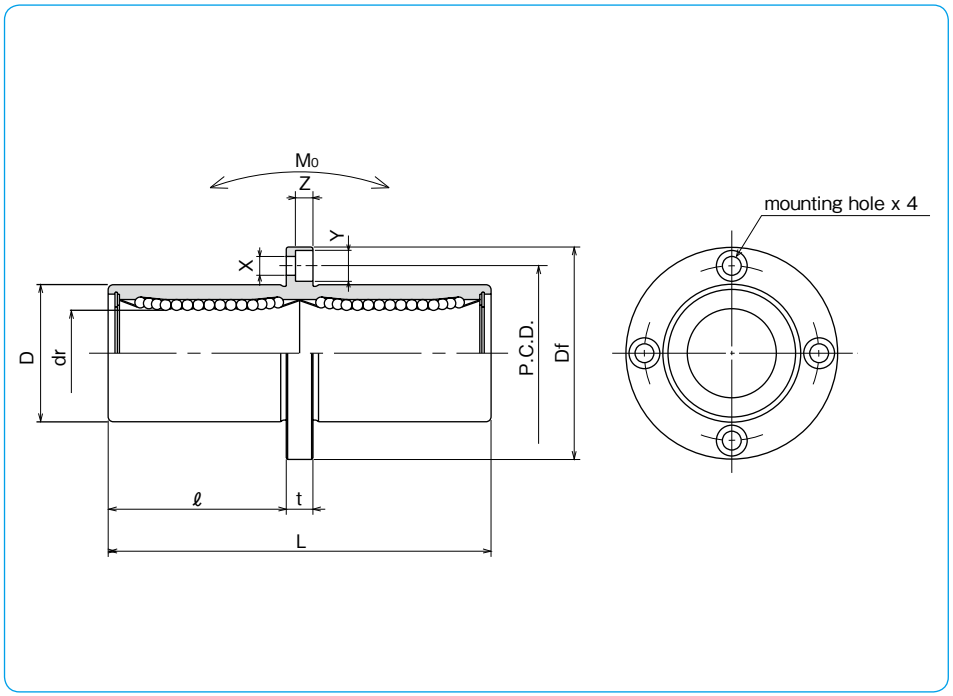

part number				number of ball circuits	major dimensions				
standard		anti-corrosion			dr		D		L
steel retainer	resin retainer	stainless retainer	resin retainer		mm	tolerance μm	mm	tolerance μm	±0.3 mm
KBFC 8	KBFC 8G	KBSFC 8	KBSFC 8G	4	8	+ 9	16	0/−13	46
KBFC12	KBFC12G	KBSFC12	KBSFC12G	4	12	− 1	22	0	61
KBFC16	KBFC16G	KBSFC16	KBSFC16G	4	16	+11	26	−16	68
KBFC20	KBFC20G	KBSFC20	KBSFC20G	5	20	− 1	32	0	80
KBFC25	KBFC25G	KBSFC25	KBSFC25G	6	25	+13	40	−19	112
KBFC30	KBFC30G	KBSFC30	KBSFC30G	6	30	− 2	47		123
KBFC40	KBFC40G	KBSFC40	KBSFC40G	6	40	+16	62	0	151
KBFC50	KBFC50G	KBSFC50	KBSFC50G	6	50	− 4	75	−22	192
KBFC60	KBFC60G	KBSFC60	KBSFC60G	6	60		90	0/−25	209

flange					eccentricity	perpendicularity	basic load rating		allowable	mass	shaft diameter
							dynamic	static	static moment		
ℓ mm	Df mm	t mm	P.C.D. mm	X×Y×Z mm	μm	μm	C N	Co N	Mo N・m	g	mm
20.5	32	5	24	3.5×6×3.1	15	15	421	804	4.3	59	8
27.5	42	6	32	4.5×7.5×4.1			813	1,570	11.7	110	12
31	46	6	36	4.5×7.5×4.1			921	1,780	14.2	160	16
36	54	8	43	5.5×9×5.1	17	17	1,370	2,740	25.0	260	20
52	62	8	51	5.5×9×5.1			1,570	3,140	44.0	540	25
56.5	76	10	62	6.6×11×6.1			2,500	5,490	78.9	815	30
69	98	13	80	9×14×8.1	20	20	3,430	8,040	147	1,805	40
89.5	112	13	94	9×14×8.1			6,080	15,900	396	2,820	50
95.5	134	18	112	11×17×11.1	25	25	7,550	20,000	487	4,920	60

1N≒0.102kgf 1N・m≒0.102kgf・m

www.bergab.ru Берг АБ bergab@ya.ru Тел. (495)-228-06-21, факс (495) 223-3071

www.bergab.ru Берг АБ bergab@ya.ru Тел. (495)-228-06-21, факс (495) 223-3071

KBKC TYPE (Euro Standard)

— Center Mount Square Flange Type —

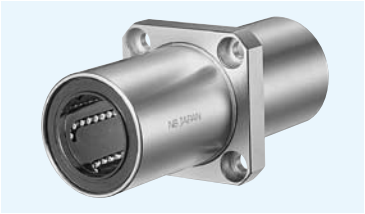

part number structure

example **KBSKC 25 G UU - SK**

specification
KBKC: standard
KBSKC: anti-corrosion

inner contact diameter (dr)

retainer material
blank: standard/steel
anti-corrosion/stainless steel
G: resin

seal
blank: without seal
UU: seals on both sides

outer cylinder
surface treatment
blank: no surface treatment
SK: electroless nickel plating
LF: low temperature black chrome treatment with fluoride coating
SB: black oxide (not available on anti-corrosion type)
SC: industrial chrome plating

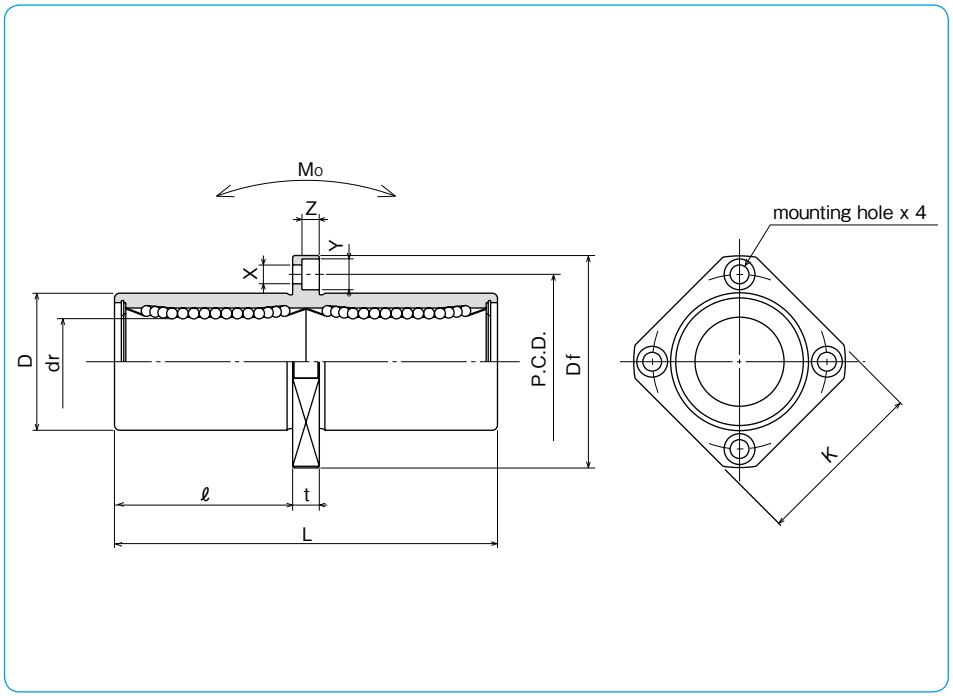

part number standard steel retainer	part number standard resin retainer	part number anti-corrosion stainless retainer	part number anti-corrosion resin retainer	number of ball circuits	major dimensions dr mm	dr tolerance μm	D mm	D tolerance μm	L ±0.3 mm
KBKC 8	KBKC 8G	KBSKC 8	KBSKC 8G	4	8	+ 9	16	0/−13	46
KBKC12	KBKC12G	KBSKC12	KBSKC12G	4	12	− 1	22	0	61
KBKC16	KBKC16G	KBSKC16	KBSKC16G	4	16	+11	26	−16	68
KBKC20	KBKC20G	KBSKC20	KBSKC20G	5	20	− 1	32	0	80
KBKC25	KBKC25G	KBSKC25	KBSKC25G	6	25	+13	40	−19	112
KBKC30	KBKC30G	KBSKC30	KBSKC30G	6	30	− 2	47		123
KBKC40	KBKC40G	KBSKC40	KBSKC40G	6	40	+16	62	0	151
KBKC50	KBKC50G	KBSKC50	KBSKC50G	6	50	− 4	75	−22	192
KBKC60	KBKC60G	KBSKC60	KBSKC60G	6	60		90	0/−25	209

flange ℓ mm	flange Df mm	flange K mm	flange t mm	flange P.C.D. mm	flange X×Y×Z mm	eccentricity μm	perpendicularity μm	basic load rating dynamic C N	basic load rating static Co N	allowable static moment Mo N・m	mass g	shaft diameter mm
20.5	32	25	5	24	3.5×6×3.1	15	15	421	804	4.3	51	8
27.5	42	32	6	32	4.5×7.5×4.1			813	1,570	11.7	90	12
31	46	35	6	36	4.5×7.5×4.1			921	1,780	14.2	135	16
36	54	42	8	43	5.5×9×5.1	17	17	1,370	2,740	25.0	225	20
52	62	50	8	51	5.5×9×5.1			1,570	3,140	44.0	500	25
56.5	76	60	10	62	6.6×11×6.1			2,500	5,490	78.9	720	30
69	98	75	13	80	9×14×8.1	20	20	3,430	8,040	147	1,600	40
89.5	112	88	13	94	9×14×8.1			6,080	15,900	396	2,620	50
95.5	134	106	18	112	11×17×11.1	25	25	7,550	20,000	487	4,480	60

1N≒0.102kgf 1N・m≒0.102kgf・m

www.bergab.ru Берг АБ bergab@ya.ru Тел. (495)-228-06-21, факс (495) 223-3071

www.bergab.ru Берг АБ bergab@ya.ru Тел. (495)-228-06-21, факс (495) 223-3071

SW TYPE (Inch Standard)

– Standard Type –

part number structure

example **SWS 16 G R UU-P**

- specification
  SW: standard
  SWS: anti-corrosion
- size
- retainer material
  blank: standard/steel
  anti-corrosion/stainless steel
  G: resin
- self aligning
  blank: non self aligning
  R: self aligning
- seal
  blank: without seal
  U: seal on one side
  UU: seals on both sides
  *Seals are not available on SWS2 and SWS3.
- accuracy grade
  blank: high
  P: precision

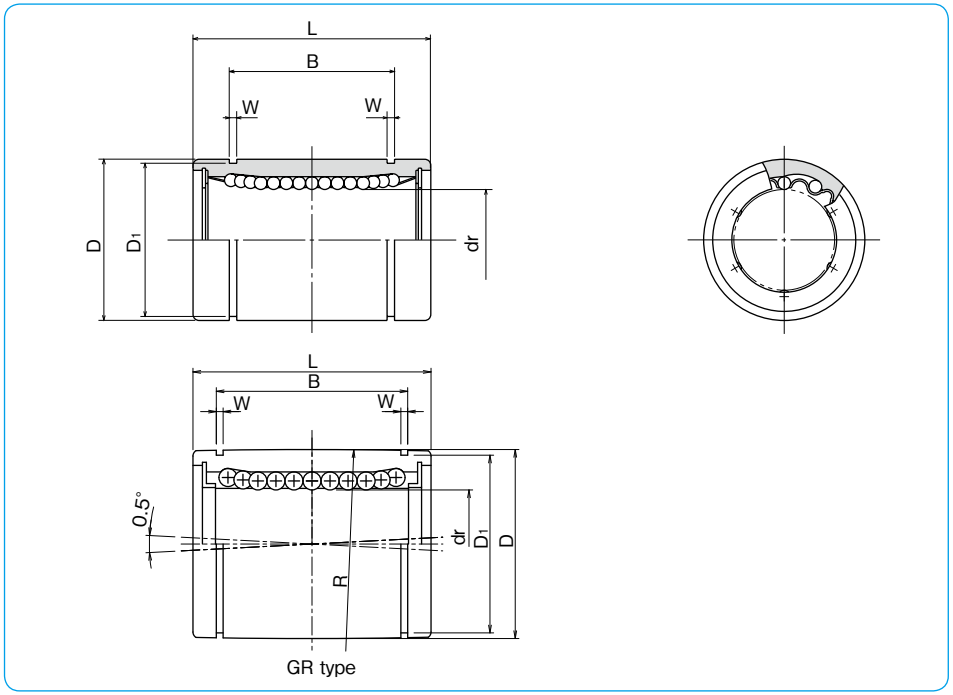

partnumber: standard steel retainer	standard resinretainer		anti-corrosion stainless retainer	anti-corrosion resin retainer	number of ball circuits	dr inch (mm)	dr tolerance inch/(μm) precision	dr tolerance inch/(μm) high	D inch (mm)	D tolerance inch/(μm)
–	–	–	SWS2	SWS2G	4	.1250 (3.175)	–	0 −.00035 (−8)	.3125 (7.938)	0 −.00040 (−9)
–	–	–	SWS3	SWS3G	4	.1875 (4.763)			.3750 (9.525)	
SW4	SW4G	SW4GR	SWS4	SWS4G	4	.2500 (6.350)	0 −.00025 (−6)	0 −.00040 (−9)	.5000 (12.700)	0 −.00045 (−11)
SW6	SW6G	SW6GR	SWS6	SWS6G	4	.3750 (9.525)			.6250 (15.875)	0 −.00050 (−13)
SW8	SW8G	SW8GR	SWS8	SWS8G	4	.5000 (12.700)			.8750 (22.225)	
SW10	SW10G	SW10GR	SWS10	SWS10G	4	.625 (15.875)			1.1250 (28.575)	
SW12	SW12G	SW12GR	SWS12	SWS12G	5	.7500 (19.050)	0 −.00030 (−7)	0 −.00040 (−10)	1.2500 (31.750)	0 −.00065 (−16)
SW16	SW16G	SW16GR	SWS16	SWS16G	6	1.0000 (25.400)			1.5625 (39.688)	
SW20	SW20G	SW20GR	SWS20	SWS20G	6	1.2500 (31.750)	0 −.00035 (−8)	0 −.00050 (−12)	2.0000 (50.800)	0 −.00075 (−19)
SW24	SW24G	SW24GR	SWS24	SWS24G	6	1.5000 (38.100)			2.3750 (60.325)	
SW32	SW32G	SW32GR	SWS32	SWS32G	6	2.0000 (50.800)			3.0000 (76.200)	0 −.00090 (−22)
SW40	–	–	–	–	6	2.5000 (63.500)	0 −.00040 (−9)	0 −.00060 (−15)	3.7500 (95.250)	
SW48	–	–	–	–	6	3.0000 (76.200)			4.50000 (114.300)	
SW64	–	–	–	–	6	4.0000 (101.600)	0 −.00040 (−10)	0 −.00080 (−20)	6.0000 (152.400)	0 −.00100 (−25)

L inch (mm)	L tolerance inch/(mm)	B inch (mm)	B tolerance inch/(mm)	W inch (mm)	D_1 inch (mm)	eccentricity precision inch/(μm)	eccentricity high inch/(μm)	radial clearance (maximum) inch/(μm)	basicloadrating dynamic C N	basicloadrating static Co N	mass g	shaft diameter inch (mm)
.5000 (12.700)	0 −.008 (−0.2)	.3681 (9.35)	0 −.008 (−0.2)	.0280 (0.710)	.2902 (7.370)	–	.0003 (8)	−.0001 (−2)	59	76	2.8	1/8 (3.175)
.5625 (14.275)		.4311 (10.95)		.0280 (0.710)	.3520 (8.940)			−.0001 (−3)	91	110	3.6	3/16 (4.763)
.7500 (19.050)		.5110 (12.98)		.0390 (0.992)	.4687 (11.906)	.0003 (8)	.0005 (12)		206	265	9.5	1/4 (6.350)
.8750 (22.225)		.6358 (16.15)		.0390 (0.992)	.5880 (14.935)				225	314	15	3/8 (9.525)
1.2500 (31.750)		.9625 (24.46)		.0459 (1.168)	.8209 (20.853)			−.0001 (−4)	510	784	42	1/2 (12.700)
1.5000 (38.100)		1.1039 (28.04)		.0559 (1.422)	1.0590 (26.899)				774	1,180	85	5/8 (15.875)
1.6250 (41.275)		1.1657 (29.61)		.0559 (1.422)	1.1760 (29.870)	.0004 (10)	.0006 (15)	−.0002 (−6)	862	1,370	104	3/4 (19.050)
2.2500 (57.150)	0 −.012 (−0.3)	1.7547 (44.57)	0 −.012 (−0.3)	.0679 (1.727)	1.4687 (37.306)				980	1,570	220	1 (25.400)
2.6250 (66.675)		2.0047 (50.92)		.0679 (1.727)	1.8859 (47.904)	.0005 (12)	.0008 (20)	−.0003 (−8)	1,570	2,740	465	1-1/4 (31.750)
3.0000 (76.200)		2.4118 (61.26)		.0859 (2.184)	2.2389 (56.870)				2,180	4,020	720	1-1/2 (38.100)
4.0000 (101.600)		3.1917 (81.07)		.1029 (2.616)	2.8379 (72.085)	.0007 (17)	.0010 (25)	−.0005 (−13)	3,820	7,940	1,310	2 (50.800)
5.0000 (127.000)		3.9760 (100.99)		.1200 (3.048)	3.5519 (90.220)				4,700	10,000	2,600	2-1/2 (63.500)
6.0000 (152.400)	0 −.016 (−0.4)	4.726 (120.04)	0 −.016 (−0.4)	.1200 (3.048)	4.3100 (109.474)			−.0008 (−20)	7,350	16,000	4,380	3 (76.200)
8.0000 (203.200)		6.258 (158.95)		.1389 (3.530)	5.745 (145.923)	.0008 (20)	.0012 (30)		14,100	34,800	10,200	4 (101.600)

1N≒0.225lbf 1kg≒2.205lbs

www.bergab.ru Берг АБ bergab@ya.ru Тел. (495)-228-06-21, факс (495) 223-3071

www.bergab.ru Берг АБ bergab@ya.ru Тел. (495)-228-06-21, факс (495) 223-3071

SW-AJ TYPE (Inch Standard)

– Clearance Adjustable Type –

part number structure

example **SWS 16 G R UU - AJ**

- specification
  SW: standard
  SWS: anti-corrosion
- size
- retainer material
  blank: standard/steel
  anti-corrosion/stainless steel
  G: resin
- self aligning
  blank: non self aligning
  R: self aligning
- seal
  blank: without seal
  U: seal on one side
  UU: seals on both sides
- clearance-adjustable

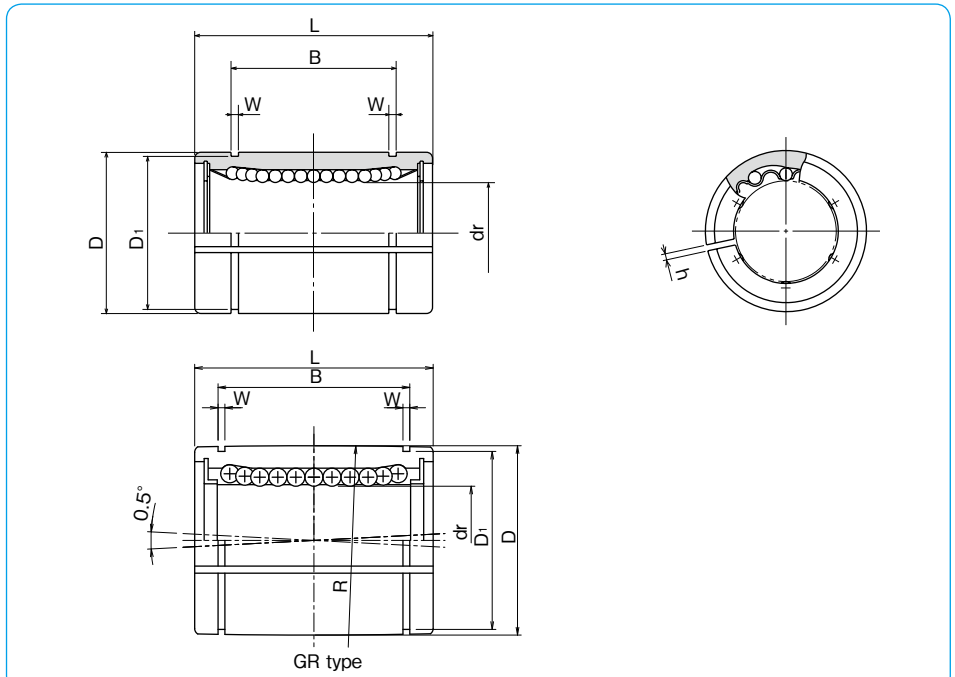

GR type

partnumber standard steelretainer	partnumber standard resinretainer		partnumber anti-corrosion stainless retainer	partnumber anti-corrosion resinretainer	number ofball circuits	majordimensions dr inch (mm)	dr tolerance* inch/(μm)	majordimensions D inch (mm)	D tolerance* inch/(μm)
–	SW4G-AJ	–	–	SWS4G-AJ	4	.2500 (6.350)	0 −.00040 (−9)	.5000 (12.700)	0 −.00045 (−11)
–	SW6G-AJ	–	–	SWS6G-AJ	4	.3750 (9.525)		.6250 (15.875)	0 −.00050 (−13)
SW8-AJ	SW8G-AJ	SW8GR-AJ	SWS8-AJ	SWS8G-AJ	4	5.000 (12.700)		.8750 (22.225)	
SW10-AJ	SW10G-AJ	SW10GR-AJ	SWS10-AJ	SWS10G-AJ	4	.625 (15.875)		1.1250 (28.575)	
SW12-AJ	SW12G-AJ	SW12GR-AJ	SWS12-AJ	SWS12G-AJ	5	.7500 (19.050)	0 −.00040 (−10)	1.2500 (31.750)	0 −.00065 (−16)
SW16-AJ	SW16G-AJ	SW16GR-AJ	SWS16-AJ	SWS16G-AJ	6	1.0000 (25.400)		1.5625 (39.688)	
SW20-AJ	SW20G-AJ	SW20GR-AJ	SWS20-AJ	SWS20G-AJ	6	1.2500 (31.750)	0 −.00050 (−12)	2.0000 (50.800)	0 −.00075 (−19)
SW24-AJ	SW24G-AJ	SW24GR-AJ	SWS24-AJ	SWS24G-AJ	6	1.5000 (38.100)		2.3750 (60.325)	
SW32-AJ	SW32G-AJ	SW32GR-AJ	SWS32-AJ	SWS32G-AJ	6	2.0000 (50.800)		3.0000 (76.200)	0 −.00090 (−22)
SW40-AJ	–	–	–	–	6	2.5000 (63.500)	0 −.00060 (−15)	3.7500 (95.250)	
SW48-AJ	–	–	–	–	6	3.0000 (76.200)		4.50000 (114.300)	
SW64-AJ	–	–	–	–	6	4.0000 (101.600)	0 −.00080 (−20)	6.0000 (152.400)	0 −.00100 (−25)

* Accuracy is measured prior to machining clearance slit.

L inch (mm)	L tolerance inch/(mm)	B inch (mm)	B tolerance inch/(mm)	W inch (mm)	D_1 inch (mm)	h inch (mm)	eccentricity* inch (μm)	basicloadrating dynamic C N	basicloadrating static Co N	mass g	shaft diameter inch (mm)
.7500 (19.050)	0 −.008 (−0.2)	.5100 (12.98)	0 −.008 (−0.2)	.0390 (0.992)	.4687 (11.906)	.04 (1)	.0005 (12)	206	265	7.5	1/4 (6.350)
.8750 (22.225)		.6358 (12.15)		.0390 (0.992)	.5880 (14.935)	.04 (1)		225	314	13.5	3/8 (9.525)
1.2500 (31.750)		.9625 (24.46)		.0459 (1.168)	.8209 (20.853)	.06 (1.5)		510	784	41	1/2 (12.700)
1.5000 (38.100)		1.1039 (28.04)		.0559 (1.422)	1.0590 (26.899)	.06 (1.5)		774	1,180	83	5/8 (15.875)
1.6250 (41.275)		1.1657 (29.61)		.0559 (1.422)	1.1760 (29.870)	.06 (1.5)	.0006 (15)	862	1,370	102	3/4 (19.050)
2.2500 (57.150)	0 −.012 (−0.3)	1.7547 (44.57)	0 −.012 (−0.3)	.0679 (1.727)	1.4687 (37.306)	.06 (1.5)		980	1,570	218	1 (25.400)
2.6250 (66.675)		2.0047 (50.92)		.0679 (1.727)	1.8859 (47.904)	.10 (2.5)	.0008 (20)	1,570	2,740	455	1-1/4 (31.750)
3.0000 (76.200)		2.4118 (61.26)		0.859 (2.184)	2.2389 (56.870)	.12 (3)		2,180	4,020	710	1-1/2 (38.100)
4.0000 (101.600)		3.1917 (81.07)		.1029 (2.616)	2.8379 (72.085)	.12 (3)	.0010 (25)	3,820	7,940	1,290	2 (50.800)
5.0000 (127.000)		3.9760 (100.99)		.1200 (3.048)	3.5519 (90.220)	.12 (3)		4,700	10,000	2,560	2-1/2 (63.500)
6.0000 (152.400)	0 −.016 (−0.4)	4.726 (120.04)	0 −.016 (−0.4)	.1200 (3.048)	4.3100 (109.474)	.12 (3)		7,350	16,000	4,350	3 (76.200)
8.0000 (203.200)		6.258 (158.95)		.1389 (3.530)	5.745 (145.923)	.12 (3)	.0012 (30)	14,100	34,800	10,150	4 (101.600)

1N≒0.225lbf 1kg≒2.205lbs

www.bergab.ru Берг АБ bergab@ya.ru Тел. (495)-228-06-21, факс (495) 223-3071

www.bergab.ru Берг АБ bergab@ya.ru Тел. (495)-228-06-21, факс (495) 223-3071

SW-OP TYPE (Inch Standard)

– Open Type –

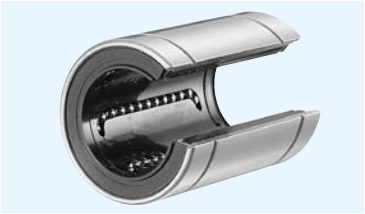

part number structure

example **SWS 16 G R UU-OP**

- specification
  SW: standard
  SWS: anti-corrosion
- size
- retainer material
  blank: standard/steel
  anti-corrosion/stainless steel
  G: resin
- self aligning
  blank: non self aligning
  R: self aligning
- seal
  blank: without seal
  U: seal on one side
  UU: seals on both sides
- open type

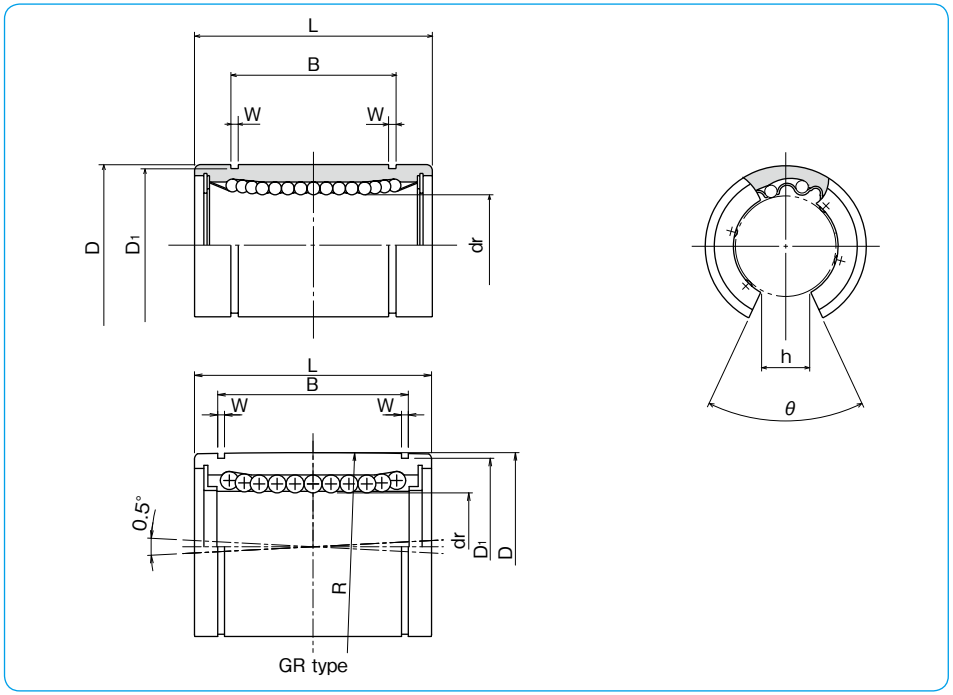

part number: standard, steel retainer	part number: standard, resin retainer		part number: anti-corrosion, steel retainer	part number: anti-corrosion, resin retainer	number of ball circuits	major dimensions: dr inch (mm)	dr tolerance* inch/(μm)	D inch (mm)	D tolerance* inch/(μm)
SW 8-OP	SW 8G-OP	SW 8GR-OP	SWS 8-OP	SWS 8G-OP	3	.5000 (12.700)	0 −.00040 (−9)	.8750 (22.225)	0 −.00050 (−13)
SW10-OP	SW10G-OP	SW10GR-OP	SWS10-OP	SWS10G-OP	3	.625 (15.875)		1.1250 (28.575)	
SW12-OP	SW12G-OP	SW12GR-OP	SWS12-OP	SWS12G-OP	4	.7500 (19.050)	0 −.00040 (−10)	1.2500 (31.750)	0 −.00065 (−16)
SW16-OP	SW16G-OP	SW16GR-OP	SWS16-OP	SWS16G-OP	5	1.0000 (25.400)		1.5625 (39.688)	
SW20-OP	SW20G-OP	SW20GR-OP	SWS20-OP	SWS20G-OP	5	1.2500 (31.750)	0 −.00050 (−12)	2.0000 (50.800)	0 −.00075 (−19)
SW24-OP	SW24G-OP	SW24GR-OP	SWS24-OP	SWS24G-OP	5	1.5000 (38.100)		2.3750 (60.325)	
SW32-OP	SW32G-OP	SW32GR-OP	SWS32-OP	SWS32G-OP	5	2.0000 (50.800)		3.0000 (76.200)	0 −.00090 (−22)
SW40-OP	–	–	–	–	5	2.5000 (63.500)	0 −.00060 (−15)	3.7500 (95.250)	
SW48-OP	–	–	–	–	5	3.0000 (76.200)		4.50000 (114.300)	
SW64-OP	–	–	–	–	5	4.0000 (101.600)	0 −.00080 (−20)	6.0000 (152.400)	0 −.00100 (−25)

* Accuracy is measured prior to machining clearance slit.

L inch (mm)	L tolerance inch/(mm)	B inch (mm)	B tolerance inch/(mm)	W inch (mm)	D_1 inch (mm)	h inch (mm)	θ	eccentricity* inch (μm)	basic load rating dynamic C N	basic load rating static Co N	mass g	shaft diameter inch (mm)
1.2500 (31.750)	0 −.008 (−0.2)	.9625 (24.46)	0 −.008 (−0.2)	.0459 (1.168)	.8209 (20.853)	.34 (7.9375)	80°	.0005 (12)	510	784	32	1/2 (12.700)
1.5000 (38.100)		1.1039 (28.04)		.0559 (1.422)	1.0590 (26.899)	.375 (9.5250)	80°		774	1,180	64	5/8 (15.875)
1.6250 (41.275)		1.1657 (29.61)		.0559 (1.422)	1.1760 (29.870)	.4375 (11.1125)	60°	.0006 (15)	862	1,370	86	3/4 (19.050)
2.2500 (57.150)	0 −.012 (−0.3)	1.7547 (44.57)	0 −.012 (−0.3)	.0679 (1.727)	1.4687 (37.306)	.5625 (14.2875)	50°		980	1,570	190	1 (25.400)
2.6250 (66.675)		2.0047 (50.92)		.0679 (1.727)	1.8859 (47.904)	.625 (15.875)	50°	.0008 (20)	1,570	2,740	390	1-1/4 (31.750)
3.0000 (76.200)		2.4118 (61.26)		0.859 (2.184)	2.2389 (56.870)	.75 (19.05)	50°		2,180	4,020	610	1-1/2 (38.100)
4.0000 (101.600)		3.1917 (81.07)		.1029 (2.616)	2.8379 (72.085)	1.0 (25.40)	50°	.0010 (25)	3,820	7,940	1,120	2 (50.800)
5.0000 (127.000)		3.9760 (100.99)		.1200 (3.048)	3.5519 (90.220)	1.25 (31.75)	50°		4,700	10,000	2,230	2-1/2 (63.500)
6.0000 (152.400)	0 −.016 (−0.4)	4.726 (120.04)	0 −.016 (−0.4)	.1200 (3.048)	4.3100 (109.474)	1.5 (38.10)	50°		7,350	16,000	3,750	3 (76.200)
8.0000 (203.200)		6.258 (158.95)		.1389 (3.530)	5.745 (145.923)	2.0 (50.80)	50°	.0012 (30)	14,100	34,800	8,740	4 (101.60)

1N≒0.225lbf 1kg≒2.205lbs

www.bergab.ru Берг АБ bergab@ya.ru Тел. (495)-228-06-21, факс (495) 223-3071

www.bergab.ru Берг АБ bergab@ya.ru Тел. (495)-228-06-21, факс (495) 223-3071

SW-W TYPE (Inch Standard)

– Double-Wide Type –

part number structure

example **SWS 16 G W UU**

specification
SW: standard
SWS: anti-corrosion

size

retainer material
blank: standard/steel
anti-corrosion/stainless steel
G: resin

double-wide type

seal
blank: without seal
UU: seals on both sides

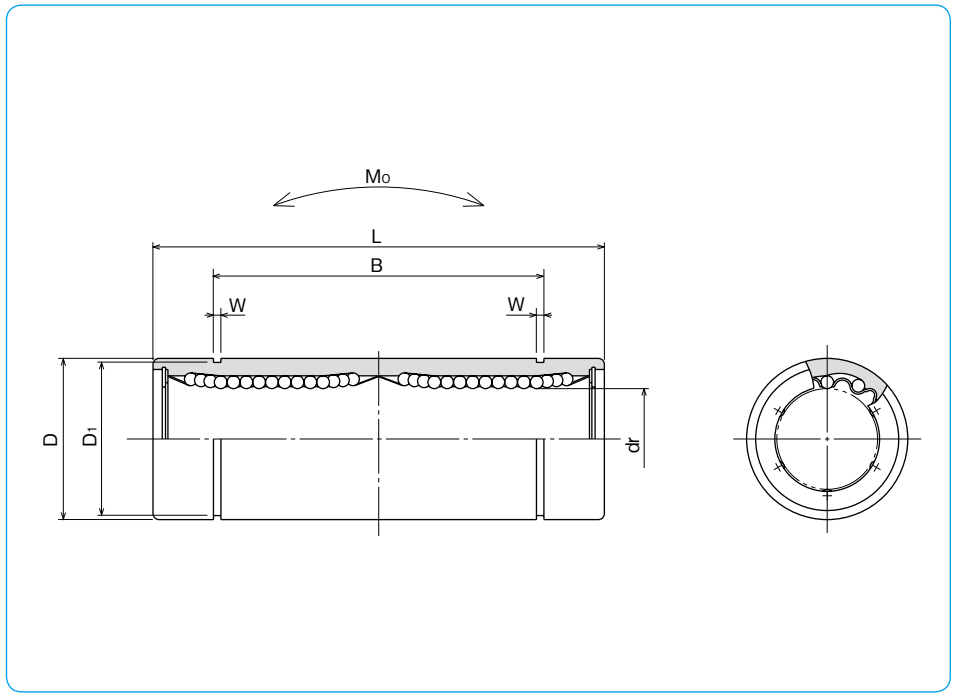

part number: standard, steel retainer	part number: standard, resin retainer	part number: anti-corrosion, stainless retainer	part number: anti-corrosion, resin retainer	number of ball circuits	dr inch (mm)	dr tolerance inch/(μm)	D inch (mm)	D tolerance inch/(μm)
SW 4W	SW 4GW	SWS 4W	SWS 4GW	4	.2500 (6.350)	0 −.00040 (−10)	.5000 (12.700)	0 −.00050 (−13)
SW 6W	SW 6GW	SWS 6W	SWS 6GW	4	.3750 (9.525)		.6250 (15.875)	0 −.00065 (−16)
SW 8W	SW 8GW	SWS 8W	SWS 8GW	4	.5000 (12.700)		.8750 (22.225)	
SW10W	SW10GW	SWS10W	SWS10GW	4	.6250 (15.875)		1.1250 (28.575)	
SW12W	SW12GW	SWS12W	SWS12GW	5	.7500 (19.050)	0 −.00050 (−12)	1.2500 (31.750)	0 −.00075 (−19)
SW16W	SW16GW	SWS16W	SWS16GW	6	1.0000 (25.400)		1.5625 (39.688)	
SW20W	SW20GW	SWS20W	SWS20GW	6	1.2500 (31.750)	0 −.00060 (−15)	2.0000 (50.800)	0 −.00090 (−22)
SW24W	SW24GW	SWS24W	SWS24GW	6	1.5000 (38.100)		2.3750 (60.325)	
SW32W	SW32GW	SWS32W	SWS32GW	6	2.0000 (50.800)		3.0000 (76.200)	0 −.00100 (−25)

L inch (mm)	L tolerance inch/(mm)	B inch (mm)	B tolerance inch/(mm)	W inch (mm)	D1 inch (mm)	eccentricity inch (μm)	basic load rating dynamic C N	basic load rating static Co N	allowable static moment Mo N・m	mass g	shaft diameter inch (mm)
1.3750 (34.925)	0 −.012 (−0.3)	1.0220 (25.959)	0 −.012 (−0.3)	.0390 (0.992)	.4687 (11.906)	.0006 (15)	323	530	2.0	17.5	1/4 (6.350)
1.5938 (40.481)		1.2716 (32.298)		.0390 (0.992)	.5880 (14.935)		353	630	2.7	28	3/8 (9.525)
2.3750 (60.325)		1.9250 (48.895)		.0459 (1.168)	.8209 (20.853)		813	1,570	11.5	80	1/2 (12.700)
2.8125 (71.438)		2.2079 (56.080)		.0559 (1.422)	1.0590 (26.899)		1,230	2,350	20.0	160	5/8 (15.875)
3.0937 (78.581)		2.3314 (59.218)		.0559 (1.422)	1.1760 (29.870)	.0008 (20)	1,370	2,740	26.5	195	3/4 (19.050)
4.2813 (108.744)	0 −.016 (−0.4)	3.5094 (89.139)	0 −.016 (−0.4)	.0679 (1.727)	1.4687 (37.306)		1,570	3,140	41.2	410	1 (25.400)
5.0000 (127.000)		4.0094 (101.839)		.0679 (1.727)	1.8859 (47.904)	.0010 (25)	2,500	5,490	84.8	820	1-1/4 (31.750)
5.6875 (144.463)		4.8236 (122.519)		.0859 (2.184)	2.2389 (56.870)		3,430	8,040	143	1,250	1-1/2 (38.100)
7.7500 (196.850)		6.3834 (162.138)		.1029 (2.616)	2.8379 (72.085)	.0012 (30)	6,080	15,900	399	2,350	2 (50.800)

1N≒0.225lbf 1N・m≒0.738lb・ft
1kg≒2.205lbs

www.bergab.ru Берг АБ bergab@ya.ru Тел. (495)-228-06-21, факс (495) 223-3071

www.bergab.ru Берг АБ bergab@ya.ru Тел. (495)-228-06-21, факс (495) 223-3071

SWF TYPE (Inch Standard)

— Round Flange Type —

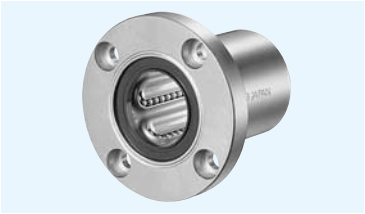

part number structure

example **SWSF 16 G UU-SK**

specification
SWF: standard
SWSF: anti-corrosion

size

retainer material
blank: standard/steel
anti-corrosion/stainless steel
G: resin

outer cylinder
surface treatment
blank: no surface treatment
SK: electroless nickel plating
LF: low temperature black chrome treatment with fluoride coating
SB: black oxide (not available on anti-corrosion type)
SC: industrial chrome plating

seal
blank: without seal
UU: seals on both sides

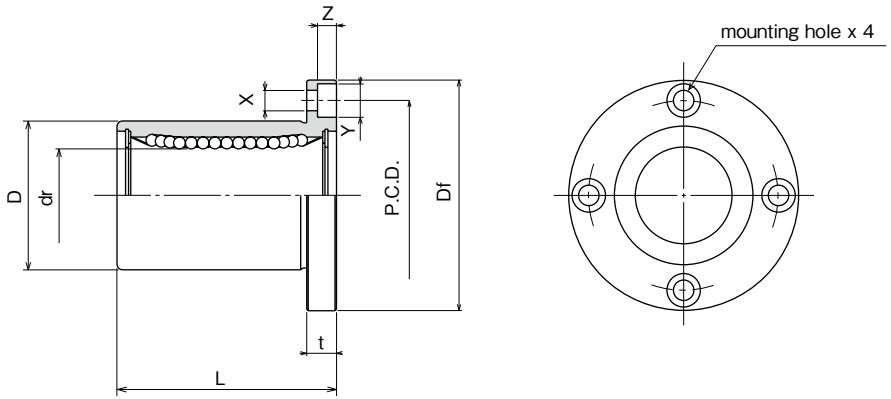

part number: standard, steel retainer	part number: standard, resin retainer	part number: anti-corrosion, stainless retainer	part number: anti-corrosion, resin retainer	number of ball circuits	dr inch (mm)	dr tolerance inch/(μm)	D inch (mm)	D tolerance inch/(μm)	L ±.012 (±0.3) inch/(mm)
SWF 4	SWF 4G	SWSF 4	SWSF 4G	4	.2500 (6.350)	0 −.00040 (−9)	.5000 (12.700)	0 −.00050 (−13)	.7500 (19.050)
SWF 6	SWF 6G	SWSF 6	SWSF 6G	4	.3750 (9.525)		.6250 (15.875)	0 −.00065 (−16)	.8750 (22.225)
SWF 8	SWF 8G	SWSF 8	SWSF 8G	4	.5000 (12.700)		.8750 (22.225)		1.2500 (31.750)
SWF10	SWF10G	SWSF10	SWSF10G	4	.6250 (15.875)		1.1250 (28.575)		1.5000 (38.100)
SWF12	SWF12G	SWSF12	SWSF12G	5	.7500 (19.050)	0 −.00040 (−10)	1.2500 (31.750)	0 −.00075 (−19)	1.6250 (41.275)
SWF16	SWF16G	SWSF16	SWSF16G	6	1.0000 (25.400)		1.5625 (39.688)		2.2500 (57.150)
SWF20	SWF20G	SWSF20	SWSF20G	6	1.2500 (31.750)	0 −.00050 (−12)	2.0000 (50.800)	0 −.00090 (−22)	2.6250 (66.675)
SWF24	SWF24G	SWSF24	SWSF24G	6	1.5000 (38.100)		2.3750 (60.325)		3.0000 (76.200)
SWF32	SWF32G	SWSF32	SWSF32G	6	2.0000 (50.800)		3.0000 (76.200)	0 −.00100 (−25)	4.0000 (101.600)
SWF40	–	–	–	6	2.5000 (63.500)	0 −.00060 (−15)	3.7500 (95.250)		5.0000 (127.000)
SWF48	–	–	–	6	3.0000 (76.200)		4.5000 (114.300)		6.0000 (152.400)
SWF64	–	–	–	6	4.0000 (101.600)	0 −.00080 (−20)	6.0000 (152.400)	0 −.00115 (−29)	8.0000 (203.200)

Df inch/(mm)	t inch/(mm)	flange P.C.D. inch/(mm)	X×Y×Z inch/(mm)	eccentricity inch (μm)	perpendicularity inch (μm)	basic load rating dynamic C N	basic load rating static Co N	mass g	shaft diameter inch (mm)
1.2500 (31.750)	0.219 (5.556)	.8750 (22.225)	.1560×.2500×.1410 (3.969×6.350×3.572)	.0005 (12)	.0005 (12)	206	265	32	1/4 (6.350)
1.5000 (38.100)	.2500 (6.350)	1.0620 (26.988)	.1875×.2970×.1720 (4.763×7.541×4.366)			225	314	47	3/8 (9.525)
1.7500 (44.450)	.2500 (6.350)	1.312 (33.338)	.1875×.2970×.1720 (4.763×7.541×4.366)			510	784	88	1/2 (12.700)
2.0000 (50.800)	.2500 (6.350)	1.5620 (39.688)	.1875×.2970×.1720 (4.763×7.541×4.366)			774	1,180	140	5/8 (15.875)
2.1875 (55.563)	.3125 (7.938)	1.7180 (43.660)	.2187×.3440×.2030 (5.556×8.731×5.159)	.0006 (15)	.0006 (15)	862	1,370	190	3/4 (19.050)
2.5000 (63.500)	.3125 (7.938)	2.0310 (51.594)	.2187×.3440×.2030 (5.556×8.731×5.159)			980	1,570	325	1 (25.400)
3.1250 (79.375)	.3750 (9.525)	2.5625 (65.088)	.2812×.4060×.2656 (7.144×10.319×6.747)	.0008 (20)	.0008 (20)	1,570	2,740	665	1-1/4 (31.750)
3.7500 (95.250)	.5000 (12.700)	3.0625 (77.788)	.3440×.5000×.3280 (8.731×12.700×8.334)			2,180	4,020	1,100	1-1/2 (38.100)
4.3750 (111.125)	.5000 (12.700)	3.6875 (93.662)	.3440×.5000×.3280 (8.731×12.700×8.334)	.0010 (25)	.0010 (25)	3,820	7,940	1,760	2 (50.800)
5.3750 (136.525)	.7500 (19.050)	4.5625 (115.887)	.4062×.6250×.3750 (10.319×15.875×9.525)			4,700	10,000	3,570	2-1/2 (63.500)
6.1250 (155.575)	.7500 (19.050)	5.3125 (134.937)	.4062×.6250×.3750 (10.319×15.875×9.525)			7,350	16,000	5,600	3 (76.200)
8.0000 (203.200)	.8750 (22.225)	7.0000 (177.800)	.5000×.7125×.5000 (12.700×18.097×12.700)	.0012 (30)	.0012 (30)	14,100	34,800	12,000	4 (101.600)

1N≒0.225lbf 1kg≒2.205lbs

www.bergab.ru Берг АБ bergab@ya.ru Тел. (495)-228-06-21, факс (495) 223-3071

www.bergab.ru Берг АБ bergab@ya.ru Тел. (495)-228-06-21, факс (495) 223-3071

SWK TYPE (Inch Standard)

– Square Flange Type –

part number structure

example **SWSK 16 G UU-SK**

specification
SWK: standard
SWSK: anti-corrosion

size

retainer material
blank: standard/steel
anti-corrosion/stainless steel
G: resin

outer cylinder
surface treatment
blank: no surface treatment
SK: electroless nickel plating
LF: low temperature black chrome treatment with fluoride coating
SB: black oxide (not available on anti-corrosion type)
SC: industrial chrome plating

seal
blank: without seal
UU: seals on both sides

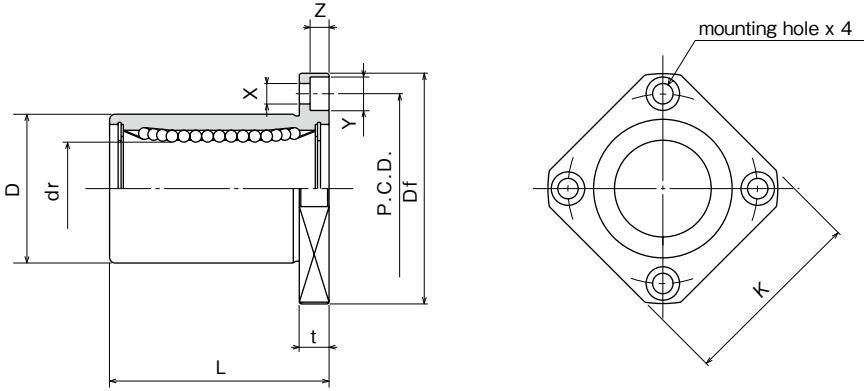

part number standard steel retainer	standard resin retainer	anti-corrosion stainless retainer	anti-corrosion resin retainer	number of ball circuits	dr inch (mm)	dr tolerance inch/(μm)	D inch (mm)	D tolerance inch/(μm)	L ±.012 (±0.3) inch/(mm)
SWK 4	SWK 4G	SWSK 4	SWSK 4G	4	.2500 (6.350)	0 −.00040 (−9)	.5000 (12.700)	0 −.00050 (−13)	.7500 (19.050)
SWK 6	SWK 6G	SWSK 6	SWSK 6G	4	.3750 (9.525)		.6250 (15.875)	0 −.00065 (−16)	.8750 (22.225)
SWK 8	SWK 8G	SWSK 8	SWSK 8G	4	.5000 (12.700)		.8750 (22.225)		1.2500 (31.750)
SWK10	SWK10G	SWSK10	SWSK10G	4	.6250 (15.875)		1.1250 (28.575)		1.5000 (38.100)
SWK12	SWK12G	SWSK12	SWSK12G	5	.7500 (19.050)	0 −.00040 (−10)	1.2500 (31.750)	0 −.00075 (−19)	1.6250 (41.275)
SWK16	SWK16G	SWSK16	SWSK16G	6	1.0000 (25.400)		1.5625 (39.688)		2.2500 (57.150)
SWK20	SWK20G	SWSK20	SWSK20G	6	1.2500 (31.750)	0 −.00050 (−12)	2.0000 (50.800)	0 −.00090 (−22)	2.6250 (66.675)
SWK24	SWK24G	SWSK24	SWSK24G	6	1.5000 (38.100)		2.3750 (60.325)		3.0000 (76.200)
SWK32	SWK32G	SWSK32	SWSK32G	6	2.0000 (50.800)		3.0000 (76.200)	0 −.00100 (−25)	4.0000 (101.600)
SWK40	–	–	–	6	2.5000 (63.500)	0 −.00060 (−15)	3.7500 (95.250)		5.0000 (127.000)
SWK48	–	–	–	6	3.0000 (76.200)		4.5000 (114.300)		6.0000 (152.400)
SWK64	–	–	–	6	4.0000 (101.600)	0 −.00080 (−20)	6.0000 (152.400)	0 −.00115 (−29)	8.0000 (203.200)

Df inch/(mm)	K inch/(mm)	t inch/(mm)	P.C.D. inch/(mm)	X×Y×Z inch/(mm)	eccentricity inch (μm)	perpendicularity inch (μm)	basic load rating dynamic C N	basic load rating static Co N	mass g	shaft diameter inch (mm)
1.2500 (31.750)	1.0000 (25.400)	0.219 (5.556)	.8750 (22.225)	.1560×.2500×.1410 (3.969×6.350×3.572)	.0005 (12)	.0005 (12)	206	265	25	1/4 (6.350)
1.5000 (38.100)	1.2500 (31.750)	.2500 (6.350)	1.0620 (26.988)	.1875×.2970×.1720 (4.763×7.541×4.366)			225	314	32	3/8 (9.525)
1.7500 (44.450)	1.3750 (34.925)	.2500 (6.350)	1.312 (33.338)	.1875×.2970×.1720 (4.763×7.541×4.366)			510	784	68	1/2 (12.700)
2.0000 (50.800)	1.5000 (38.100)	.2500 (6.350)	1.5620 (39.688)	.1875×.2970×.1720 (4.763×7.541×4.366)			774	1,180	124	5/8 (15.875)
2.1875 (55.563)	1.6875 (42.863)	.3125 (7.938)	1.7180 (43.660)	.2187×.3440×.2030 (5.556×8.731×5.159)	.0006 (15)	.0006 (15)	862	1,370	150	3/4 (19.050)
2.5000 (63.500)	2.0000 (50.800)	.3125 (7.938)	2.0310 (51.594)	.2187×.3440×.2030 (5.556×8.731×5.159)			980	1,570	280	1 (25.400)
3.1250 (79.375)	2.5000 (63.500)	.3750 (9.525)	2.5625 (65.088)	.2812×.4060×.2656 (7.144×10.319×6.747)			1,570	2,740	580	1-1/4 (31.750)
3.7500 (95.250)	3.0000 (76.200)	.5000 (12.700)	3.0625 (77.788)	.3440×.5000×.3280 (8.731×12.700×8.334)	.0008 (20)	.0008 (20)	2,180	4,020	930	1-1/2 (38.100)
4.3750 (111.125)	3.5000 (88.900)	.5000 (12.700)	3.6875 (93.662)	.3440×.5000×.3280 (8.731×12.700×8.334)			3,820	7,940	1,580	2 (50.800)
5.3750 (136.525)	4.3750 (111.125)	.7500 (19.050)	4.5625 (115.887)	.4062×.6250×.3750 (10.319×15.875×9.525)	.0010 (25)	.0010 (25)	4,700	10,000	3,200	2-1/2 (63.500)
6.1250 (155.575)	5.0000 (127.000)	.7500 (19.050)	5.3125 (134.937)	.4062×.6250×.3750 (10.319×15.875×9.525)			7,350	16,000	5,000	3 (76.200)
8.0000 (203.200)	6.7500 (171.450)	.8750 (22.225)	7.0000 (177.800)	.5000×.7125×.5000 (12.700×18.097×12.700)	.0012 (30)	.0012 (30)	14,100	34,800	11,300	4 (101.600)

1N≒0.225lbf 1kg≒2.205lbs

www.bergab.ru Берг АБ bergab@ya.ru Тел. (495)-228-06-21, факс (495) 223-3071

www.bergab.ru Берг АБ bergab@ya.ru Тел. (495)-228-06-21, факс (495) 223-3071

SWT TYPE (Inch Standard)

— Two Side Cut Flange Type —

part number structure

example **SWST 12 G UU-SK**

- specification
  - **SWT**: standard
  - **SWST**: anti-corrosion
- size
- retainer material
  - **blank**: standard/steel
  - anti-corrosion/stainless steel
  - **G**: resin
- seals on both sides
- outer cylinder surface treatment
  - **blank**: no surface treatment
  - **SK**: electroless nickel plating
  - **LF**: low temperature black chrome treatment with fluoride coating
  - **SB**: black oxide (not available on anti-corrosion type)
  - **SC**: industrial chrome plating

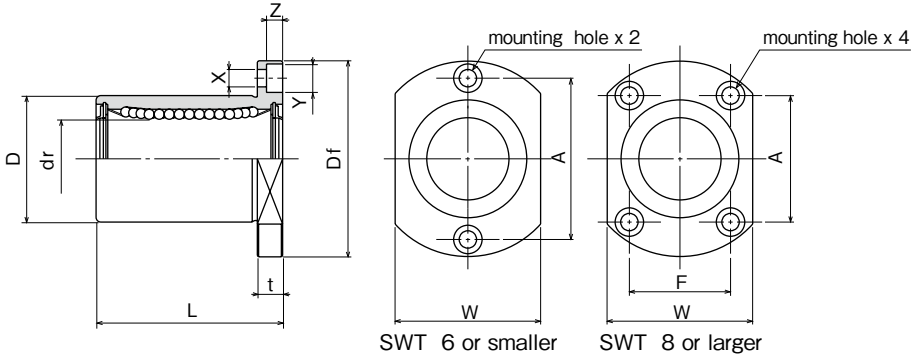

part number				number of ball circuits	major dimensions				
standard		anti-corrosion			dr		D		L
steel retainer	resin retainer	stainless retainer	resin retainer		inch (mm)	tolerance inch/(μm)	inch (mm)	tolerance inch/(μm)	±.012 (±0.3) inch/(mm)
SWT 4 UU	SWT 4G UU	SWST 4 UU	SWST 4G UU	4	.2500 (6.350)	0 −.00040 (−9)	.5000 (12.700)	0 −.00050 (−13)	.7500 (19.050)
SWT 6 UU	SWT 6G UU	SWST 6 UU	SWST 6G UU	4	.3750 (9.525)		.6250 (15.875)	0 −.00065 (−16)	.8750 (22.225)
SWT 8 UU	SWT 8G UU	SWST 8 UU	SWST 8G UU	4	.5000 (12.700)		.8750 (22.225)		1.2500 (31.750)
SWT10 UU	SWT10G UU	SWST10 UU	SWST10G UU	4	.6250 (15.875)		1.1250 (28.575)		1.5000 (38.100)
SWT12 UU	SWT12G UU	SWST12 UU	SWST12G UU	5	.7500 (19.050)	0 −.00040 (−10)	1.2500 (31.750)	0 −.00075 (−19)	1.6250 (41.275)
SWT16 UU	SWT16G UU	SWST16 UU	SWST16G UU	6	1.0000 (25.400)		1.5625 (39.688)		2.2500 (57.150)
SWT20 UU	SWT20G UU	SWST20 UU	SWST20G UU	6	1.2500 (31.750)	0 −.00050 (−12)	2.0000 (50.800)	0 −.00090 (−22)	2.6250 (66.675)

* UU type is standard.

flange						eccentricity	perpendicularity	basic load rating		mass	shaft diameter
Df inch/(mm)	W inch/(mm)	t inch/(mm)	A inch/(mm)	F inch/(mm)	X×Y×Z inch/(mm)	inch (μm)	inch (μm)	dynamic C N	static Co N	g	inch (mm)
1.2500 (31.750)	.7500 (19.050)	.2190 (5.556)	.8750 (22.225)	— —	.1560×.2500×.1410 (3.969×6.350×3.572)	.0005 (12)	.0005 (12)	206	265	28	1/4 (6.350)
1.5000 (38.100)	.8750 (22.225)	.2500 (6.350)	1.0625 (26.988)	— —	.1875×.2970×.1720 (4.763×7.541×4.366)			225	314	44	3/8 (9.525)
1.7500 (44.450)	1.1250 (28.575)	.2500 (6.350)	1.1250 (33.338)	.6875 (17.463)	.1875×.2970×.1720 (4.763×7.541×4.366)			510	784	77	1/2 (12.700)
2.0000 (50.800)	1.3750 (34.925)	.2500 (6.350)	1.2500 (31.750)	.9375 (23.813)	.1875×.2970×.1720 (4.763×7.541×4.366)			774	1,180	125	5/8 (15.875)
2.1875 (55.563)	1.5000 (38.100)	.3125 (7.938)	1.3750 (34.925)	1.0000 (25.400)	.2187×.3440×.2030 (5.556×8.731×5.159)	.0006 (15)	.0006 (15)	862	1,370	162	3/4 (19.050)
2.5000 (63.500)	1.8750 (47.625)	.3125 (7.938)	1.5625 (39.688)	1.3125 (33.338)	.2187×.3440×.2030 (5.556×8.731×5.159)			980	1,570	293	1 (25.400)
3.1250 (79.375)	2.3750 (60.325)	.3750 (9.525)	1.8750 (47.625)	1.7500 (44.450)	.2812×.4060×.2656 (7.144×10.319×6.747)	.0008 (20)	.0008 (20)	1,570	2,740	586	1-1/4 (31.750)

1N≒0.225lbf 1kg≒2.205lbs

www.bergab.ru Берг АБ bergab@ya.ru Тел. (495)-228-06-21, факс (495) 223-3071

www.bergab.ru Берг АБ bergab@ya.ru Тел. (495)-228-06-21, факс (495) 223-3071

SWF-W TYPE (Inch Standard)

— Round Flange Double-Wide Type —

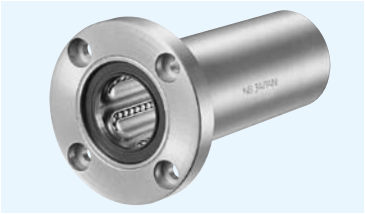

part number structure

example **SWSF 16 G W UU - SK**

- **SWSF**: specification
  - **SWF**: standard
  - **SWSF**: anti-corrosion
- **16**: size
- **G**: retainer material
  - **blank**: standard/steel
  - anti-corrosion/stainless steel
  - **G**: resin
- **W**: double-wide type
- **UU**: seal
  - **blank**: without seal
  - **UU**: seals on both sides
- **SK**: outer cylinder surface treatment
  - **blank**: no surface treatment
  - **SK**: electroless nickel plating
  - **LF**: low temperature black chrome treatment with fluoride coating
  - **SB**: black oxide (not available on anti-corrosion type)
  - **SC**: industrial chrome plating

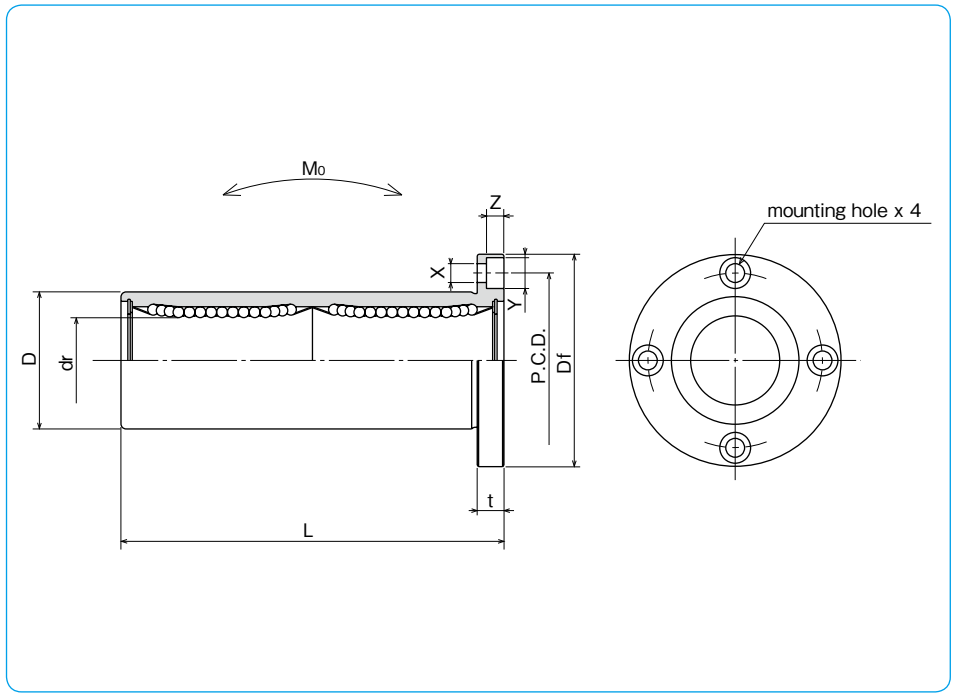

part number: standard, steel retainer	part number: standard, resin retainer	part number: anti-corrosion, stainless retainer	part number: anti-corrosion, resin retainer	number of ball circuits	dr inch (mm)	dr tolerance inch/(μm)	D inch (mm)	D tolerance inch/(μm)	L ±.012 (±0.3) inch/(mm)
SWF 4W	SWF 4GW	SWSF 4W	SWSF 4GW	4	.2500 (6.350)	0 −.00040 (−10)	.5000 (12.700)	0 −.00050 (−13)	1.3750 (34.925)
SWF 6W	SWF 6GW	SWSF 6W	SWSF 6GW	4	.3750 (9.525)		.6250 (15.875)	0 −.00065 (−16)	1.5938 (40.481)
SWF 8W	SWF 8GW	SWSF 8W	SWSF 8GW	4	.5000 (12.700)		.8750 (22.225)		2.3750 (60.325)
SWF10W	SWF10GW	SWSF10W	SWSF10GW	4	.6250 (15.875)		1.1250 (28.575)		2.8125 (71.438)
SWF12W	SWF12GW	SWSF12W	SWSF12GW	5	.7500 (19.050)	0 −.00050 (−12)	1.2500 (31.750)	0 −.00075 (−19)	3.0937 (78.581)
SWF16W	SWF16GW	SWSF16W	SWSF16GW	6	1.0000 (25.400)		1.5625 (39.688)		4.2813 (108.744)
SWF20W	SWF20GW	SWSF20W	SWSF20GW	6	1.2500 (31.750)	0 −.00060 (−15)	2.0000 (50.800)	0 −.00090 (−22)	5.0000 (127.000)
SWF24W	SWF24GW	SWSF24W	SWSF24GW	6	1.5000 (38.100)		2.3750 (60.325)		5.6875 (144.463)
SWF32W	SWF32GW	SWSF32W	SWSF32GW	6	2.0000 (50.800)		3.0000 (76.200)	0 −.00100 (−25)	7.7500 (196.850)

Df inch/(mm)	t inch/(mm)	P.C.D. inch/(mm)	X×Y×Z inch/(mm)	eccentricity inch (μm)	perpendicularity inch (μm)	basic load rating dynamic C N	basic load rating static Co N	allowable static moment Mo N・m	mass g	shaft diameter inch (mm)
1.2500 (31.750)	.2188 (5.556)	.8750 (22.225)	.1563×.2500×.1406 (3.969×6.350×3.572)	.0006 (15)	.0006 (15)	323	530	2.0	40	1/4 (6.350)
1.5000 (38.100)	.2500 (6.350)	1.0625 (26.988)	.1875×.2969×.1719 (4.763×7.541×4.366)			353	630	2.7	60	3/8 (9.525)
1.7500 (44.450)	.2500 (6.350)	1.3125 (33.338)	.1875×.2969×.1719 (4.763×7.541×4.366)			813	1,570	11.5	126	1/2 (12.700)
2.0000 (50.800)	.2500 (6.350)	1.5625 (39.688)	.1875×.2969×.1719 (4.763×7.541×4.366)			1,230	2,350	20.0	215	5/8 (15.875)
2.1875 (55.563)	.3125 (7.938)	1.7188 (43.656)	.2188×.3438×.2031 (5.556×8.731×5.159)	.0008 (20)	.0008 (20)	1,370	2,740	26.5	280	3/4 (19.050)
2.5000 (63.500)	.3125 (7.938)	2.0313 (51.594)	.2188×.3438×.2031 (5.556×8.731×5.159)			1,570	3,140	41.2	515	1 (25.400)
3.1250 (79.375)	.3750 (9.525)	2.5625 (65.088)	.2813×.4063×.2656 (7.144×10.319×6.747)	.0010 (25)	.0010 (25)	2,500	5,490	84.8	1,020	1-1/4 (31.750)
3.7500 (95.250)	.5000 (12.700)	3.0625 (77.788)	.3437×.5000×.3281 (8.731×12.700×8.334)			3,430	8,040	143	1,630	1-1/2 (38.100)
4.3750 (111.125)	.5000 (12.700)	3.6875 (93.662)	.3437×.5000×.3281 (8.731×12.700×8.334)	.0012 (30)	.0012 (30)	6,080	15,900	399	2,800	2 (50.800)

1N≒0.225lbf 1N・m≒0.738lb・ft
1kg≒2.205lbs

www.bergab.ru Берг АБ bergab@ya.ru Тел. (495)-228-06-21, факс (495) 223-3071

www.bergab.ru Берг АБ bergab@ya.ru Тел. (495)-228-06-21, факс (495) 223-3071

SWK-W TYPE (Inch Standard)

– Square Flange Double-Wide Type –

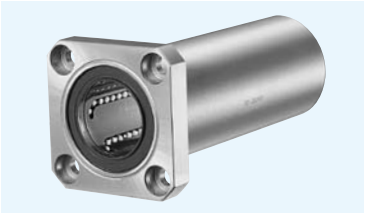

part number structure

example **SWSK 16 G W UU - SK**

- specification
  - **SWK**: standard
  - **SWSK**: anti-corrosion
- size
- retainer material
  - **blank**: standard/steel
  - anti-corrosion/stainless steel
  - **G**: resin
- double-wide type
- seal
  - **blank**: without seal
  - **UU**: seals on both sides
- outer cylinder surface treatment
  - **blank**: no surface treatment
  - **SK**: electroless nickel plating
  - **LF**: low temperature black chrome treatment with fluoride coating
  - **SB**: black oxide (not available on anti-corrosion type)
  - **SC**: industrial chrome plating

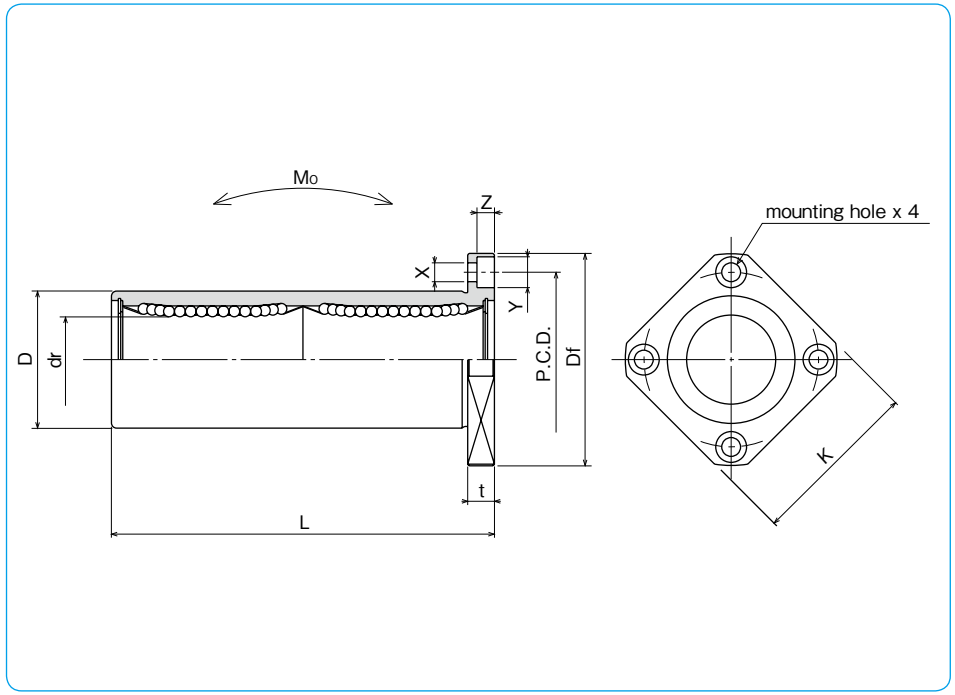

part number: standard, steel retainer	part number: standard, resin retainer	part number: anti-corrosion, stainless retainer	part number: anti-corrosion, resin retainer	number of ball circuits	dr inch (mm)	dr tolerance inch/(μm)	D inch (mm)	D tolerance inch/(μm)	L ±.012 (±0.3) inch/(mm)
SWK 4W	SWK 4GW	SWSK 4W	SWSK 4GW	4	.2500 (6.350)	0 −.00040 (−10)	.5000 (12.700)	0 −.00050 (−13)	1.3750 (34.925)
SWK 6W	SWK 6GW	SWSK 6W	SWSK 6GW	4	.3750 (9.525)		.6250 (15.875)	0 −.00065 (−16)	1.5938 (40.481)
SWK 8W	SWK 8GW	SWSK 8W	SWSK 8GW	4	.5000 (12.700)		.8750 (22.225)		2.3750 (60.325)
SWK10W	SWK10GW	SWSK10W	SWSK10GW	4	.6250 (15.875)		1.1250 (28.575)		2.8125 (71.438)
SWK12W	SWK12GW	SWSK12W	SWSK12GW	5	.7500 (19.050)	0 −.00050 (−12)	1.2500 (31.750)	0 −.00075 (−19)	3.0937 (78.581)
SWK16W	SWK16GW	SWSK16W	SWSK16GW	6	1.0000 (25.400)		1.5625 (39.688)		4.2813 (108.744)
SWK20W	SWK20GW	SWSK20W	SWSK20GW	6	1.2500 (31.750)	0 −.00060 (−15)	2.0000 (50.800)	0 −.00090 (−22)	5.0000 (127.000)
SWK24W	SWK24GW	SWSK24W	SWSK24GW	6	1.5000 (38.100)		2.3750 (60.325)		5.6875 (144.463)
SWK32W	SWK32GW	SWSK32W	SWSK32GW	6	2.0000 (50.800)		3.0000 (76.200)	0 −.00100 (−25)	7.7500 (196.850)

flange Df inch/(mm)	flange K inch/(mm)	flange t inch/(mm)	flange P.C.D. inch/(mm)	flange X×Y×Z inch/(mm)	eccentricity inch (μm)	perpendicularity inch (μm)	basic load rating dynamic C N	basic load rating static Co N	allowable static moment Mo N・m	mass g	shaft diameter inch/(mm)
1.2500 (31.750)	1.0000 (25.400)	.2188 (5.556)	.8750 (22.225)	.1563×.2500×.1406 (3.969×6.350×3.572)	.0006 (15)	.0006 (15)	323	530	2.0	33	1/4 (6.350)
1.5000 (38.100)	1.2500 (31.750)	.2500 (6.350)	1.0625 (26.988)	.1875×.2969×.1719 (4.763×7.541×4.366)			353	630	2.7	45	3/8 (9.525)
1.7500 (44.450)	1.3750 (34.925)	.2500 (6.350)	1.3125 (33.338)	.1875×.2969×.1719 (4.763×7.541×4.366)			813	1,570	11.5	106	1/2 (12.700)
2.0000 (50.800)	1.5000 (38.100)	.2500 (6.350)	1.5625 (39.688)	.1875×.2969×.1719 (4.763×7.541×4.366)			1,230	2,350	20.0	200	5/8 (15.875)
2.1875 (55.563)	1.6875 (42.863)	.3125 (7.938)	1.7188 (43.656)	.2188×.3438×.2031 (5.556×8.731×5.159)	.0008 (20)	.0008 (20)	1,370	2,740	26.5	240	3/4 (19.050)
2.5000 (63.500)	2.0000 (50.800)	.3125 (7.938)	2.0313 (51.594)	.2188×.3438×.2031 (5.556×8.731×5.159)			1,570	3,140	41.2	470	1 (25.400)
3.1250 (79.375)	2.5000 (63.500)	.3750 (9.525)	2.5625 (65.088)	.2813×.4063×.2656 (7.144×10.319×6.747)	.0010 (25)	.0010 (25)	2,500	5,490	84.8	935	1-1/4 (31.750)
3.7500 (95.250)	3.0000 (76.200)	.5000 (12.700)	3.0625 (77.788)	.3437×.5000×.3281 (8.731×12.700×8.334)			3,430	8,040	143	1,460	1-1/2 (38.100)
4.3750 (111.125)	3.5000 (88.900)	.5000 (12.700)	3.6875 (93.662)	.3437×.5000×.3281 (8.731×12.700×8.334)	.0012 (30)	.0012 (30)	6,080	15,900	399	2,620	2 (50.800)

1N≒0.225lbf 1N・m≒0.738lb・ft
1kg≒2.205lbs

www.bergab.ru Берг АБ bergab@ya.ru Тел. (495)-228-06-21, факс (495) 223-3071

www.bergab.ru Берг АБ bergab@ya.ru Тел. (495)-228-06-21, факс (495) 223-3071

SWFC TYPE (Inch Standard)

– Center Mount Round Flange Type –

part number structure

example **SWSFC 16 G UU - SK**

specification
SWFC: standard
SWSFC: anti-corrosion

size

retainer material
blank: standard/steel
anti-corrosion/stainless steel
G: resin

seal
blank: without seal
UU: seals on both sides

outer cylinder
surface treatment
blank: no surface treatment
SK: electroless nickel plating
LF: low temperature black chrome treatment with fluoride coating
SB: black oxide (not available on anti-corrosion type)
SC: industrial chrome plating

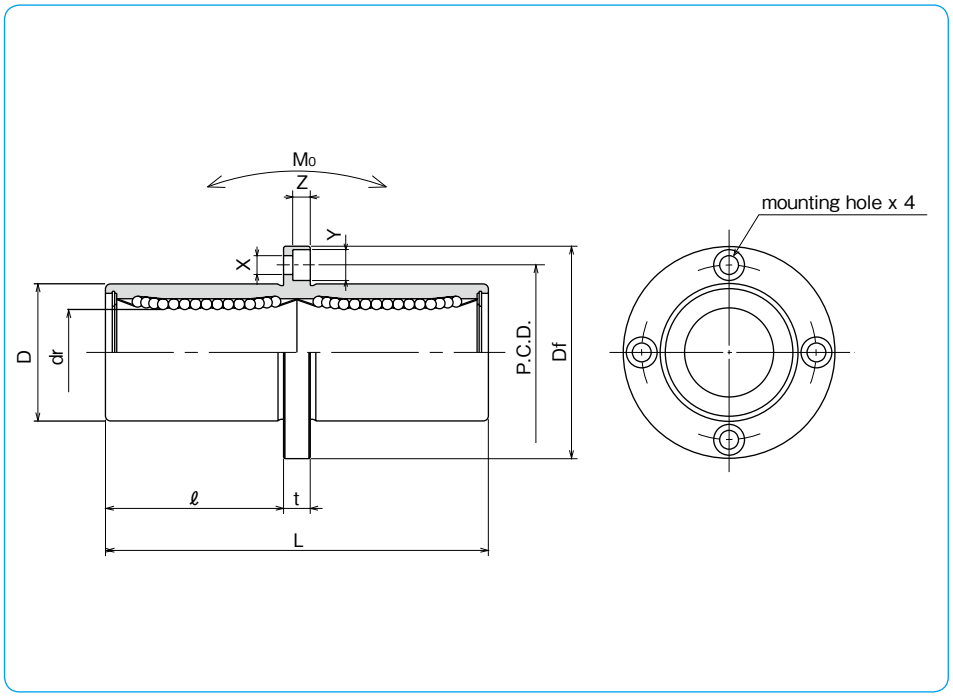

part number				number of ball circuits	major dimensions				
standard		anti-corrosion			dr		D		L
steel retainer	resin retainer	stainless retainer	resin retainer		inch (mm)	tolerance inch/(μm)	inch (mm)	tolerance inch/(μm)	±.012 (±0.3) inch/(mm)
SWFC 4	SWFC 4G	SWSFC 4	SWSFC 4G	4	.2500 (6.350)	0 −.00040 (−10)	.5000 (12.700)	0 −.00050 (−13)	1.3750 (34.925)
SWFC 6	SWFC 6G	SWSFC 6	SWSFC 6G	4	.3750 (9.525)		.6250 (15.875)	0 −.00065 (−16)	1.5938 (40.481)
SWFC 8	SWFC 8G	SWSFC 8	SWSFC 8G	4	.5000 (12.700)		.8750 (22.225)		2.3750 (60.325)
SWFC10	SWFC10G	SWSFC10	SWSFC10G	4	.6250 (15.875)		1.1250 (28.575)		2.8125 (71.438)
SWFC12	SWFC12G	SWSFC12	SWSFC12G	5	.7500 (19.050)	0 −.00050 (−12)	1.2500 (31.750)	0 −.00075 (−19)	3.0937 (78.581)
SWFC16	SWFC16G	SWSFC16	SWSFC16G	6	1.0000 (25.400)		1.5625 (39.688)		4.2813 (108.744)
SWFC20	SWFC20G	SWSFC20	SWSFC20G	6	1.2500 (31.750)	0 −.00060 (−15)	2.0000 (50.800)	0 −.00090 (−22)	5.0000 (127.000)
SWFC24	SWFC24G	SWSFC24	SWSFC24G	6	1.5000 (38.100)		2.3750 (60.325)		5.6875 (144.463)
SWFC32	SWFC32G	SWSFC32	SWSFC32G	6	2.0000 (50.800)		3.0000 (76.200)	0 −.00100 (−25)	7.7500 (196.850)

flange					eccentricity	perpendicularity	basic load rating		allowable	mass	shaft
							dynamic	static	static moment		diameter
ℓ inch/(mm)	Df inch/(mm)	t inch/(mm)	P.C.D. inch/(mm)	X×Y×Z inch/(mm)	inch (μm)	inch (μm)	C N	Co N	Mo N・m	g	inch/(mm)
.5781 (14.684)	1.2500 (31.750)	.2188 (5.556)	.8750 (22.225)	.1563×.2500×.1406 (3.969×6.350×3.572)	.0006 (15)	.0006 (15)	323	530	2.0	40	1/4 (6.350)
.6719 (17.066)	1.5000 (38.100)	.2500 (6.350)	1.0625 (26.988)	.1875×.2969×.1719 (4.763×7.541×4.366)			353	630	2.7	60	3/8 (9.525)
1.0625 (26.988)	1.7500 (44.450)	.2500 (6.350)	1.3125 (33.338)	.1875×.2969×.1719 (4.763×7.541×4.366)			813	1,570	11.5	126	1/2 (12.700)
1.2813 (32.544)	2.0000 (50.800)	.2500 (6.350)	1.5625 (39.688)	.1875×.2969×.1719 (4.763×7.541×4.366)			1,230	2,350	20.0	215	5/8 (15.875)
1.3906 (35.322)	2.1875 (55.563)	.3125 (7.938)	1.7188 (43.656)	.2188×.3438×.2031 (5.556×8.731×5.159)	.0008 (20)	.0008 (20)	1,370	2,740	26.5	280	3/4 (19.050)
1.9844 (50.403)	2.5000 (63.500)	.3125 (7.938)	2.0313 (51.594)	.2188×.3438×.2031 (5.556×8.731×5.159)			1,570	3,140	41.2	515	1 (25.400)
2.3125 (58.738)	3.1250 (79.375)	.3750 (9.525)	2.5625 (65.088)	.2813×.4063×.2656 (7.144×10.319×6.747)	.0010 (25)	.0010 (25)	2,500	5,490	84.8	1,020	1-1/4 (31.750)
2.5938 (65.882)	3.7500 (95.250)	.5000 (12.700)	3.0625 (77.788)	.3437×.5000×.3281 (8.731×12.700×8.334)			3,430	8,040	143	1,630	1-1/2 (38.100)
3.6250 (92.075)	4.3750 (111.125)	.5000 (12.700)	3.6875 (93.662)	.3437×.5000×.3281 (8.731×12.700×8.334)	.0012 (30)	.0012 (30)	6,080	15,900	399	2,800	2 (50.800)

1N≒0.225lbf 1N・m≒0.738lb・ft
1kg≒2.205lbs

www.bergab.ru Берг АБ bergab@ya.ru Тел. (495)-228-06-21, факс (495) 223-3071

www.bergab.ru Берг АБ bergab@ya.ru Тел. (495)-228-06-21, факс (495) 223-3071

SWKC TYPE (Inch Standard)

– Center Mount Square Flange Type –

part number structure

example **SWSKC 16 G UU-SK**

specification
SWKC: standard
SWSKC: anti-corrosion

size

retainer material
blank: standard/steel
anti-corrosion/stainless steel
G: resin

seal
blank: without seal
UU: seals on both sides

outer cylinder
surface treatment
blank: no surface treatment
SK: electroless nickel plating
LF: low temperature black chrome treatment with fluoride coating
SB: black oxide (not available on anti-corrosion type)
SC: industrial chrome plating

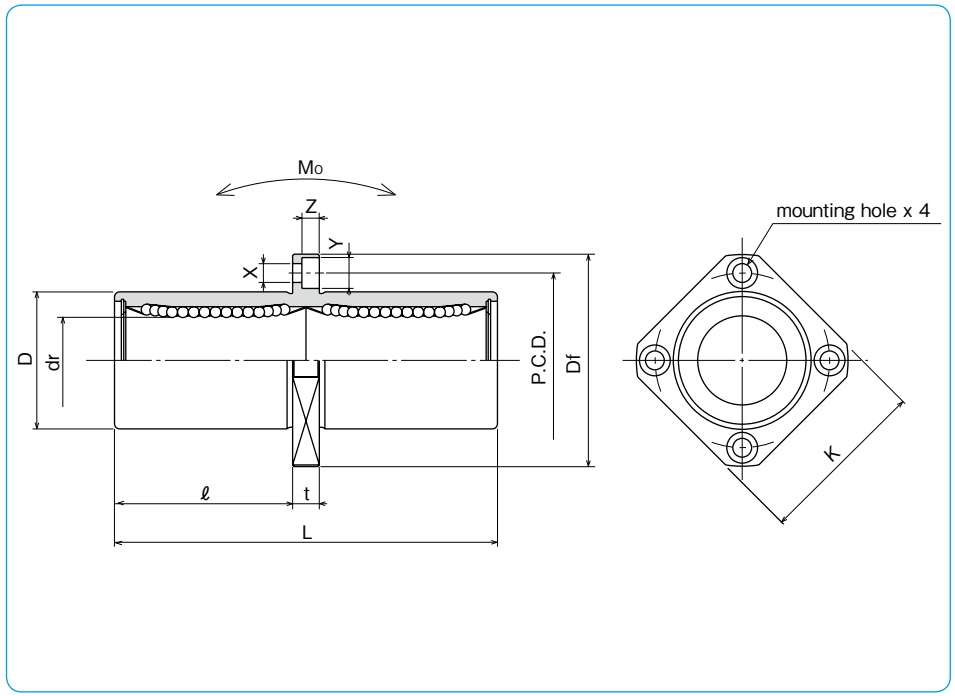

part number standard steel retainer	standard resin retainer	anti-corrosion stainless retainer	anti-corrosion resin retainer	number of ball circuits	dr inch (mm)	dr tolerance inch/(μm)	D inch (mm)	D tolerance inch/(μm)	L ±.012 (±0.3) inch/(mm)
SWKC 4	SWKC 4G	SWSKC 4	SWSKC 4G	4	.2500 (6.350)	0 −.00040 (−10)	.5000 (12.700)	0 −.00050 (−13)	1.3750 (34.925)
SWKC 6	SWKC 6G	SWSKC 6	SWSKC 6G	4	.3750 (9.525)		.6250 (15.875)	0 −.00065 (−16)	1.5938 (40.481)
SWKC 8	SWKC 8G	SWSKC 8	SWSKC 8G	4	.5000 (12.700)		.8750 (22.225)		2.3750 (60.325)
SWKC10	SWKC10G	SWSKC10	SWSKC10G	4	.6250 (15.875)		1.1250 (28.575)		2.8125 (71.438)
SWKC12	SWKC12G	SWSKC12	SWSKC12G	5	.7500 (19.050)	0 −.00050 (−12)	1.2500 (31.750)	0 −.00075 (−19)	3.0937 (78.581)
SWKC16	SWKC16G	SWSKC16	SWSKC16G	6	1.0000 (25.400)		1.5625 (39.688)		4.2813 (108.744)
SWKC20	SWKC20G	SWSKC20	SWSKC20G	6	1.2500 (31.750)	0 −.00060 (−15)	2.0000 (50.800)	0 −.00090 (−22)	5.0000 (127.000)
SWKC24	SWKC24G	SWSKC24	SWSKC24G	6	1.5000 (38.100)		2.3750 (60.325)		5.6875 (144.463)
SWKC32	SWKC32G	SWSKC32	SWSKC32G	6	2.0000 (50.800)		3.0000 (76.200)	0 −.00100 (−25)	7.7500 (196.850)

flange ℓ inch/(mm)	Df inch/(mm)	K inch/(mm)	t inch/(mm)	P.C.D. inch/(mm)	X×Y×Z inch/(mm)	eccentricity inch (μm)	perpendicularity inch (μm)	basic load rating dynamic C N	static Co N	allowable static moment Mo N・m	mass g	shaft diameter inch (mm)
.5781 (14.684)	1.2500 (31.750)	1.0000 (25.400)	.2188 (5.556)	.8750 (22.225)	.1563×.2500×.1406 (3.969×6.350×3.572)	.0006 (15)	.0006 (15)	323	530	2.0	33	1/4 (6.350)
.6719 (17.066)	1.5000 (38.100)	1.2500 (31.750)	.2500 (6.350)	1.0625 (26.988)	.1875×.2969×.1719 (4.763×7.541×4.366)			353	630	2.7	45	3/8 (9.525)
1.0625 (26.988)	1.7500 (44.450)	1.3750 (34.925)	.2500 (6.350)	1.3125 (33.338)	.1875×.2969×.1719 (4.763×7.541×4.366)			813	1,570	11.5	106	1/2 (12.700)
1.2813 (32.544)	2.0000 (50.800)	1.5000 (38.100)	.2500 (6.350)	1.5625 (39.688)	.1875×.2969×.1719 (4.763×7.541×4.366)			1,230	2,350	20.0	200	5/8 (15.875)
1.3906 (35.322)	2.1875 (55.563)	1.6875 (42.863)	.3125 (7.938)	1.7188 (43.656)	.2188×.3438×.2031 (5.556×8.731×5.159)	.0008 (20)	.0008 (20)	1,370	2,740	26.5	240	3/4 (19.050)
1.9844 (50.403)	2.5000 (63.500)	2.0000 (50.800)	.3125 (7.938)	2.0313 (51.594)	.2188×.3438×.2031 (5.556×8.731×5.159)			1,570	3,140	41.2	470	1 (25.400)
2.3125 (58.738)	3.1250 (79.375)	2.5000 (63.500)	.3750 (9.525)	2.5625 (65.088)	.2813×.4063×.2656 (7.144×10.319×6.747)	.0010 (25)	.0010 (25)	2,500	5,490	84.8	935	1-1/4 (31.750)
2.5938 (65.882)	3.7500 (95.250)	3.0000 (76.200)	.5000 (12.700)	3.0625 (77.788)	.3437×.5000×.3281 (8.731×12.700×8.334)			3,430	8,040	143	1,460	1-1/2 (38.100)
3.6250 (92.075)	4.3750 (111.125)	3.5000 (88.900)	.5000 (12.700)	3.6875 (93.662)	.3437×.5000×.3281 (8.731×12.700×8.334)	.0012 (30)	.0012 (30)	6,080	15,900	399	2,620	2 (50.800)

1N≒0.225lbf 1N・m≒0.738lb・ft
1kg≒2.205lbs

www.bergab.ru Берг АБ bergab@ya.ru Тел. (495)-228-06-21, факс (495) 223-3071

www.bergab.ru Берг АБ bergab@ya.ru Тел. (495)-228-06-21, факс (495) 223-3071

GM TYPE
– Single Type –

part number structure

example **GM 25 UU**

- GM type
- inner contact diameter (dr)
- seal
  - **blank**: without seal
  - **UU**: seals on both sides

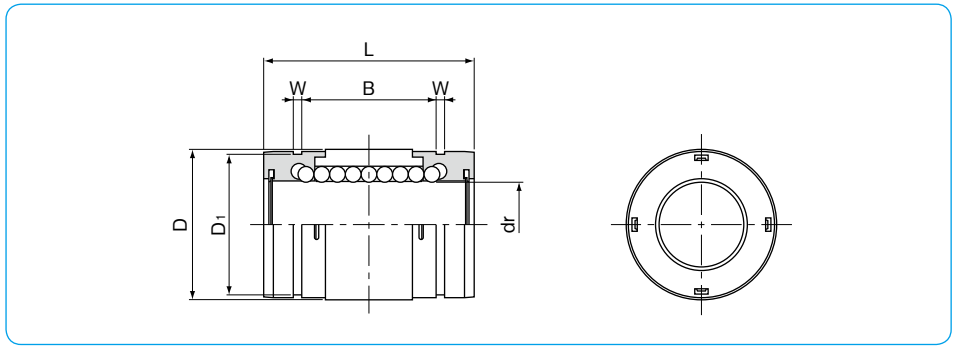

part number	number of ball circuits	dr mm	dr tolerance μm	D mm	D tolerance μm	L mm	B mm	W mm	D1 mm	basic load rating dynamic C N	basic load rating static Co N	mass g
GM 6	4	6	0 −9	12	0 −11	19	11.3	1.1	11.5	206	265	5
GM 8	4	8		15		24	15.3	1.1	14.3	274	392	10
GM10	4	10		19	0 −13	29	19.4	1.3	18	372	549	18
GM12	4	12		21		30	20.4	1.3	20	510	784	23
GM13	4	13		23		32	20.4	1.3	22	510	784	27
GM16	4	16		28		37	23.3	1.6	27	774	1,180	45
GM20	6	20	0 −10	32	0 −16	42	27.3	1.6	30.5	882	1,370	70
GM25	6	25		40		59	37.3	1.85	38	980	1,570	150
GM30	6	30		45		64	40.8	1.85	43	1,570	2,740	180

GM-AJ type (clearance adjustable type) is also manufactured. Please contact NB for details.

1N≒0.102kgf

GM-W TYPE
– Double-Wide Type –

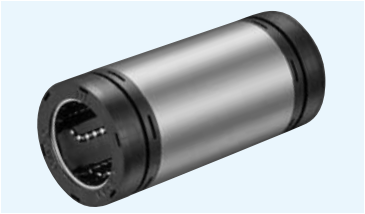

part number structure

example **GM 25 W UU**

- GM type
- inner contact diameter (dr)
- seals on both sides
- double-wide type

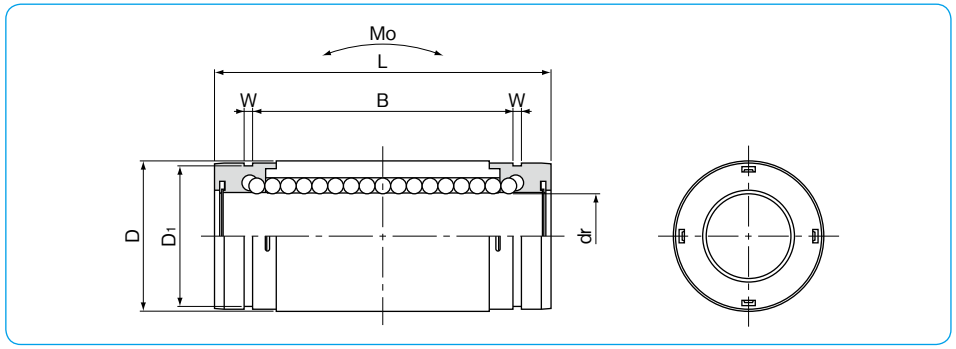

part number	number of ball circuits	dr mm	dr tolerance μm	D mm	D tolerance μm	L mm	B mm	W mm	D1 mm	basic load rating dynamic C N	basic load rating static Co N	allowable static moment Mo N・m	mass g
GM 6W UU	4	6	0 −10	12	0 −13	28	20.3	1.1	11.5	323	530	1.5	9
GM 8W UU	4	8		15		36	27.3	1.1	14.3	431	784	3.3	18
GM10W UU	4	10		19	0 −16	41	31.4	1.3	18	588	1,100	5.0	31
GM12W UU	4	12		21		46	36.4	1.3	20	813	1,570	7.6	42
GM13W UU	4	13		23		48	36.4	1.3	22	813	1,570	8.1	50
GM16W UU	4	16		28		53	39.3	1.6	27	1,230	2,350	13.8	76
GM20W UU	6	20	0 −12	32	0 −19	65	50.3	1.6	30.5	1,400	2,740	20.0	130
GM25W UU	6	25		40		91	69.3	1.85	38	1,560	3,140	34.8	280
GM30W UU	6	30		45		99	75.8	1.85	43	2,490	5,490	57.5	334

*UU type is standard.

1N≒0.102kgf 1N・m≒0.102kgf・m

www.bergab.ru Берг АБ bergab@ya.ru Тел. (495)-228-06-21, факс (495) 223-3071

www.bergab.ru Берг АБ bergab@ya.ru Тел. (495)-228-06-21, факс (495) 223-3071

GMF-W TYPE

— Round Flange Double-Wide Type —

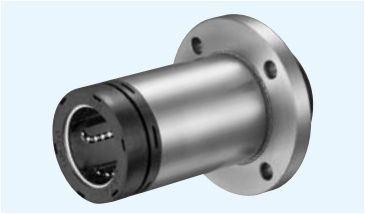

part number structure

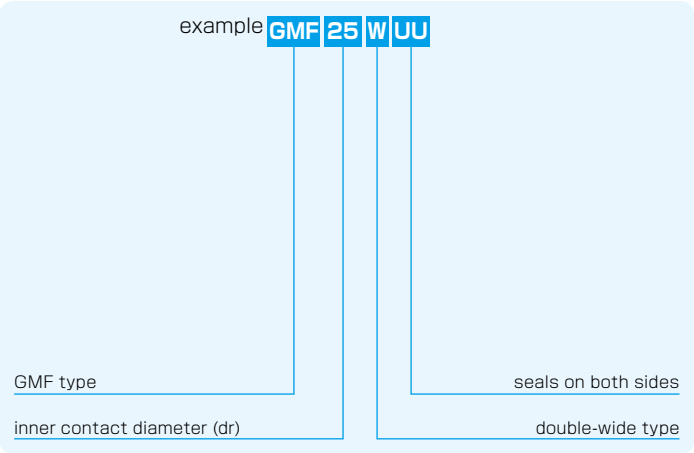

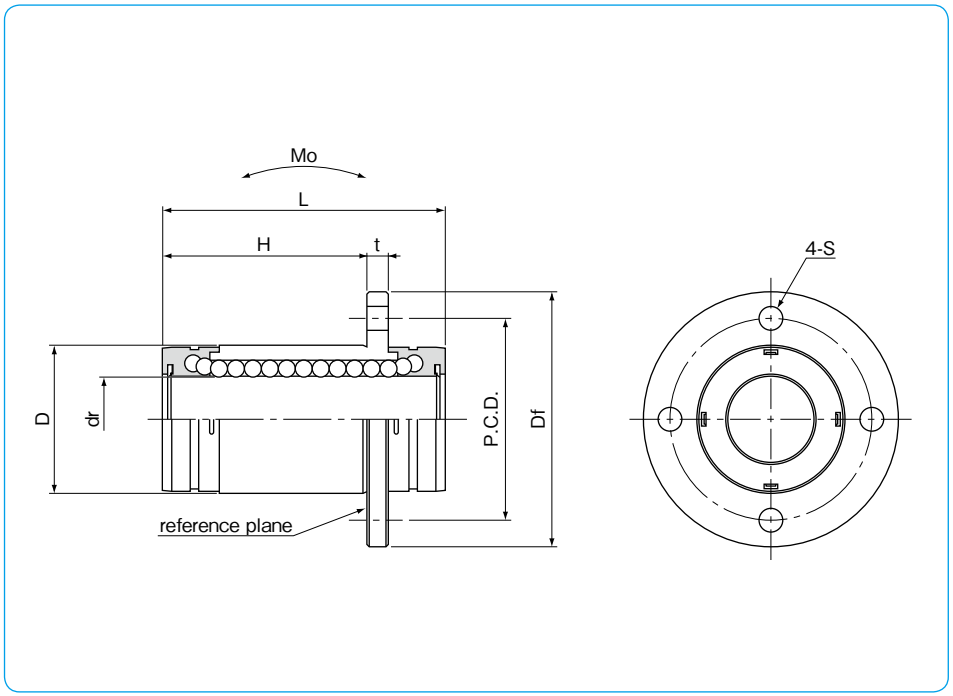

part number	number of ball circuits	dr mm	dr tolerance μm	D mm	D tolerance μm	L mm	H mm
						major dimensions	
GMF 6W UU	4	6	0 −10	12	0 −13	28	17.8
GMF 8W UU	4	8		15		36	25.1
GMF10W UU	4	10		19	0 −16	41	28.2
GMF12W UU	4	12		21		46	34.2
GMF13W UU	4	13		23		48	34.7
GMF16W UU	4	16		28		53	38.3
GMF20W UU	6	20	0 −12	32	0 −19	65	49.2
GMF25W UU	6	25		40		91	70.5
GMF30W UU	6	30		45		99	74.3

*UU type is standard.

flange Df mm	flange t mm	flange P.C.D. mm	flange S mm	perpendicularity μm	basic load rating dynamic C N	basic load rating static Co N	allowable static moment Mo N・m	mass g	shaft diameter mm
28	4	20	3.5	15	323	530	1.5	25	6
32	4	24	3.5		431	784	3.3	38	8
40	4	29	4.5		588	1,100	5.0	62	10
42	4	32	4.5		813	1,570	7.6	75	12
43	4	33	4.5		813	1,570	8.1	83	13
48	4	38	4.5		1,230	2,350	13.8	115	16
54	5	43	5.5	20	1,400	2,740	20.0	188	20
62	5	51	5.5		1,560	3,140	34.8	350	25
74	8	60	6.6		2,490	5,490	57.5	502	30

1N≒0.102kgf 1N・m≒0.102kgf・m

www.bergab.ru Берг АБ bergab@ya.ru Тел. (495)-228-06-21, факс (495) 223-3071

www.bergab.ru Берг АБ bergab@ya.ru Тел. (495)-228-06-21, факс (495) 223-3071

GMK-W TYPE

— Square Flange Double-Wide Type —

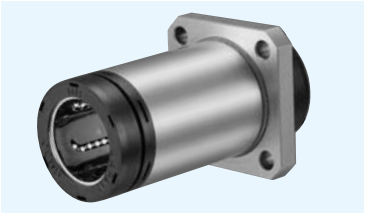

part number structure

example GMK 25 W UU

- GMK type
- inner contact diameter (dr)
- double-wide type
- seals on both sides

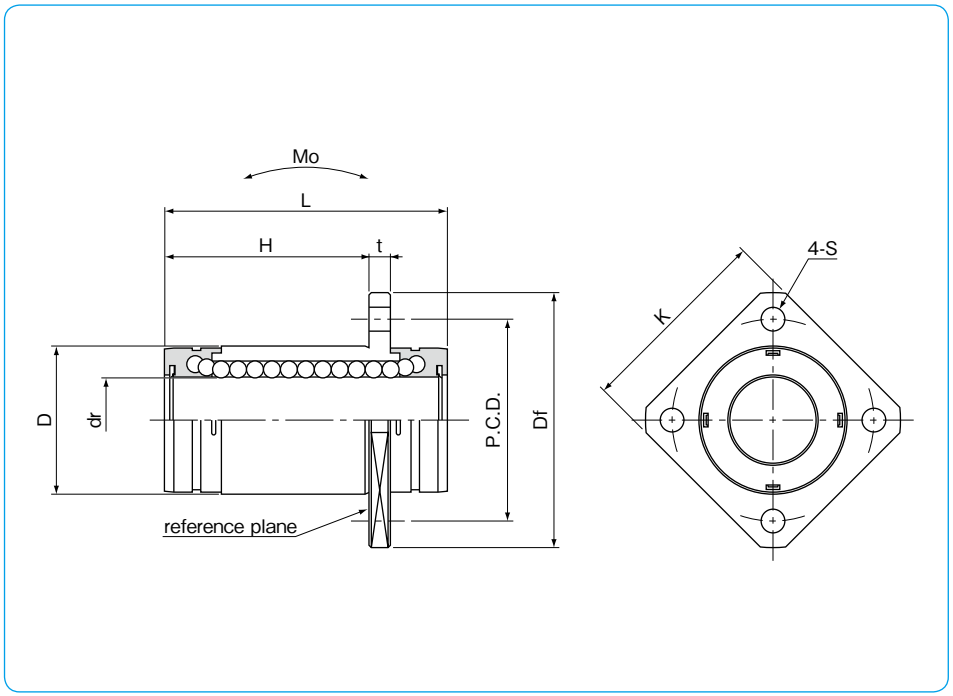

part number	number of ball circuits	dr mm	dr tolerance μm	D mm	D tolerance μm	L mm	H mm
GMK 6W UU	4	6	0 −10	12	0 −13	28	17.8
GMK 8W UU	4	8		15		36	25.1
GMK10W UU	4	10		19	0 −16	41	28.2
GMK12W UU	4	12		21		46	34.2
GMK13W UU	4	13		23		48	34.7
GMK16W UU	4	16		28		53	38.3
GMK20W UU	6	20	0 −12	32	0 −19	65	49.2
GMK25W UU	6	25		40		91	70.5
GMK30W UU	6	30		45		99	74.3

*UU type is standard.

major dimensions

Df mm	t mm	flange P.C.D. mm	K mm	S mm	perpendicularity μm	basic load rating dynamic C N	basic load rating static Co N	allowable static moment Mo N・m	mass g	shaft diameter mm
28	4	20	22	3.5	15	323	530	1.5	20	6
32	4	24	25	3.5		431	784	3.3	32	8
40	4	29	30	4.5		588	1,100	5.0	50	10
42	4	32	32	4.5		813	1,570	7.6	63	12
43	4	33	34	4.5		813	1,570	8.1	72	13
48	4	38	37	4.5		1,230	2,350	13.8	99	16
54	5	43	42	5.5	20	1,400	2,740	20.0	165	20
62	5	51	50	5.5		1,560	3,140	34.8	325	25
74	8	60	58	6.6		2,490	5,490	57.5	437	30

1N≒0.102kgf 1N・m≒0.102kgf・m

www.bergab.ru Берг АБ bergab@ya.ru Тел. (495)-228-06-21, факс (495) 223-3071

www.bergab.ru Берг АБ bergab@ya.ru Тел. (495)-228-06-21, факс (495) 223-3071

GMT-W TYPE

— Two Side Cut Double-Wide Flange Type —

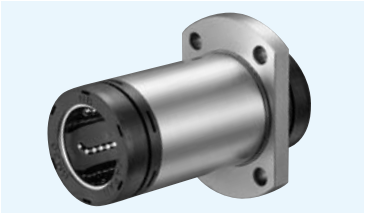

part number structure

example GMT 25 W UU

- GMT type
- inner contact diameter (dr)
- double-wide type
- seals on both sides

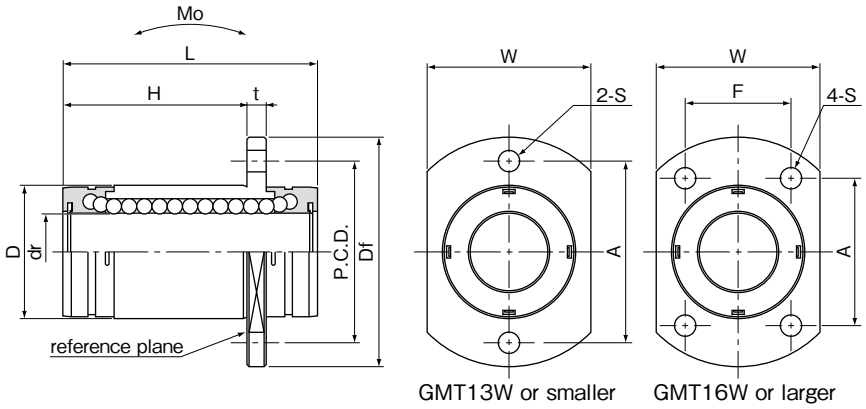

part number	number of ball circuits	dr mm	dr tolerance μm	D mm	D tolerance μm	L mm	H mm	Df mm	t mm	W mm	A mm	F mm	S mm	perpendicularity μm	basic load rating dynamic C N	basic load rating static Co N	allowable static moment Mo N・m	mass g	shaft diameter mm
GMT 6W UU	4	6	0 −10	12	0 −13	28	17.8	28	4	18	20	—	3.5	15	323	530	1.5	21	6
GMT 8W UU	4	8		15		36	25.1	32	4	21	24	—	3.5		431	784	3.3	33	8
GMT10W UU	4	10		19	0 −16	41	28.2	40	4	25	29	—	4.5		588	1,100	5.0	52	10
GMT12W UU	4	12		21		46	34.2	42	4	27	32	—	4.5		813	1,570	7.6	65	12
GMT13W UU	4	13		23		48	34.7	43	4	29	33	—	4.5		813	1,570	8.1	74	13
GMT16W UU	4	16		28		53	38.3	48	4	34	31	22	4.5		1,230	2,350	13.8	104	16
GMT20W UU	6	20	0 −12	32	0 −19	65	49.2	54	5	38	36	24	5.5	20	1,400	2,740	20.0	171	20
GMT25W UU	6	25		40		91	70.5	62	5	46	40	32	5.5		1,560	3,140	34.8	331	25
GMT30W UU	6	30		45		99	74.3	74	8	51	49	35	6.6		2,490	5,490	57.5	447	30

*UU type is standard.

1N≒0.102kgf 1N・m≒0.102kgf・m

www.bergab.ru Берг АБ bergab@ya.ru Тел. (495)-228-06-21, факс (495) 223-3071

www.bergab.ru Берг АБ bergab@ya.ru Тел. (495)-228-06-21, факс (495) 223-3071

GMF-W-E TYPE

— Round Flange Double-Wide Type with pilot end—

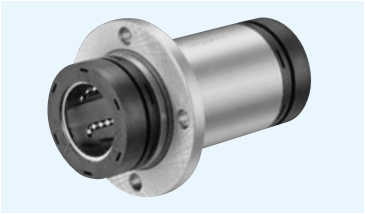

part number structure

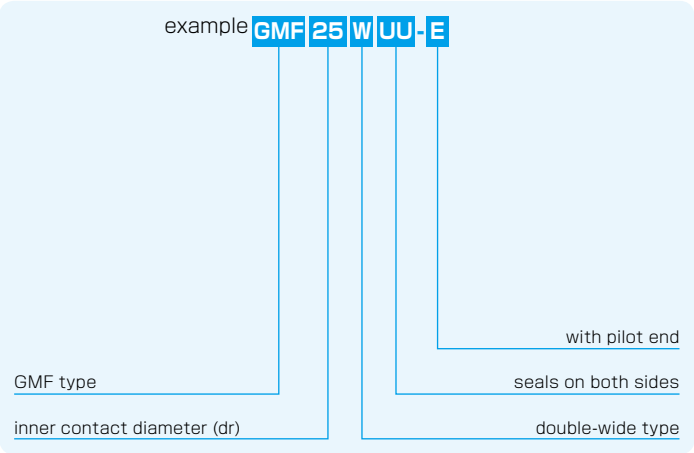

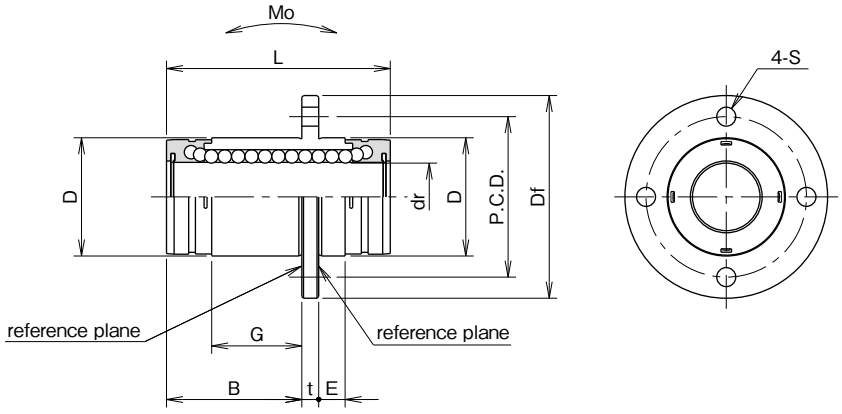

*Both sides of the flange can be used as a reference plane.

part number	number of ball circuits	dr mm	dr tolerance μm	D mm	D tolerance μm	L mm	B mm	G mm	E mm
		major dimensions							
GMF 6W UU-E	4	6	0 −10	12	0 −13	28	13.8	7.6	4
GMF 8W UU-E	4	8		15		36	21.1	14.2	4
GMF10W UU-E	4	10		19	0 −16	41	24.2	15.4	4
GMF12W UU-E	4	12		21		46	30.2	22.4	4
GMF13W UU-E	4	13		23		48	30.65	21.3	4
GMF16W UU-E	4	16		28		53	33.3	22.6	5
GMF20W UU-E	6	20	0 −12	32	0 −19	65	44.2	33.4	5
GMF25W UU-E	6	25		40		91	65.5	50.0	5
GMF30W UU-E	6	30		45		99	69.3	52.6	5

*UU type is standard.

flange Df mm	t mm	P.C.D. mm	S mm	perpendicularity μm	basic load rating dynamic C N	static Co N	allowable static moment Mo N・m	mass g	shaft diameter mm
28	4	20	3.5	15	323	530	1.5	25	6
32	4	24	3.5		431	784	3.3	38	8
40	4	29	4.5		588	1,100	5.0	62	10
42	4	32	4.5		813	1,570	7.6	75	12
43	4	33	4.5		813	1,570	8.1	83	13
48	4	38	4.5		1,230	2,350	13.8	115	16
54	5	43	5.5	20	1,400	2,740	20.0	188	20
62	5	51	5.5		1,560	3,140	34.8	350	25
74	8	60	6.6		2,490	5,490	57.5	502	30

1N≒0.102kgf 1N・m≒0.102kgf・m

www.bergab.ru Берг АБ bergab@ya.ru Тел. (495)-228-06-21, факс (495) 223-3071

www.bergab.ru Берг АБ bergab@ya.ru Тел. (495)-228-06-21, факс (495) 223-3071

GMK-W-E TYPE

— Square Flange Double-Wide Type with pilot end—

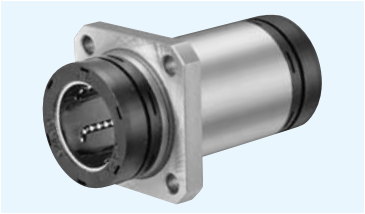

part number structure

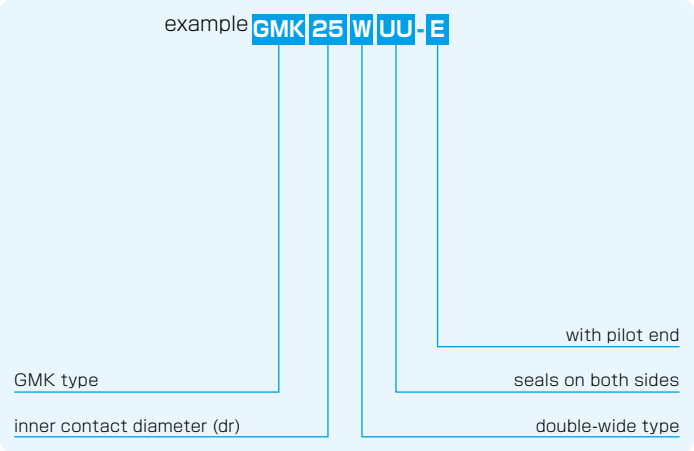

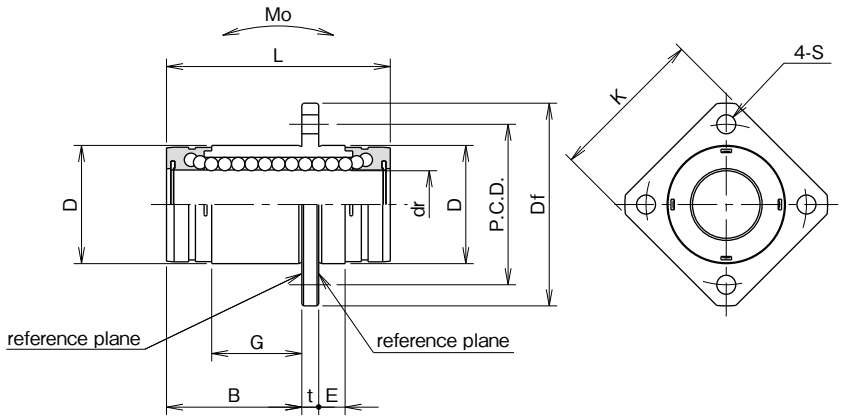

*Both sides of the flange can be used as a reference plane.

part number	number of ball circuits	dr mm	dr tolerance μm	D mm	D tolerance μm	L mm	B mm	G mm	E mm
GMK 6W UU-E	4	6	0 −10	12	0 −13	28	13.8	7.6	4
GMK 8W UU-E	4	8		15		36	21.1	14.2	4
GMK10W UU-E	4	10		19	0 −16	41	24.2	15.4	4
GMK12W UU-E	4	12		21		46	30.2	22.4	4
GMK13W UU-E	4	13		23		48	30.65	21.3	4
GMK16W UU-E	4	16		28		53	33.3	22.6	5
GMK20W UU-E	6	20	0 −12	32	0 −19	65	44.2	33.4	5
GMK25W UU-E	6	25		40		91	65.5	50.0	5
GMK30W UU-E	6	30		45		99	69.3	52.6	5

*UU type is standard.

Df mm	t mm	flange P.C.D. mm	K mm	S mm	perpendicularity μm	basic load rating dynamic C N	static Co N	allowable static moment Mo N・m	mass g	shaft diameter mm
28	4	20	22	3.5	15	323	530	1.5	20	6
32	4	24	25	3.5		431	784	3.3	32	8
40	4	29	30	4.5		588	1,100	5.0	50	10
42	4	32	32	4.5		813	1,570	7.6	63	12
43	4	33	34	4.5		813	1,570	8.1	72	13
48	4	38	37	4.5		1,230	2,350	13.8	99	16
54	5	43	42	5.5	20	1,400	2,740	20.0	165	20
62	5	51	50	5.5		1,560	3,140	34.8	325	25
74	8	60	58	6.6		2,490	5,490	57.5	437	30

1N≒0.102kgf 1N・m≒0.102kgf・m

www.bergab.ru Берг АБ bergab@ya.ru Тел. (495)-228-06-21, факс (495) 223-3071

www.bergab.ru Берг АБ bergab@ya.ru Тел. (495)-228-06-21, факс (495) 223-3071

GMT-W-E TYPE

— Two Side Cut Double-Wide Flange Type with pilot end—

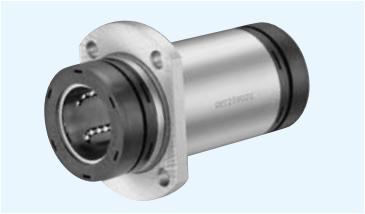

part number structure

example **GMT 25 W UU-E**

- GMT type
- inner contact diameter (dr)
- double-wide type
- seals on both sides
- with pilot end

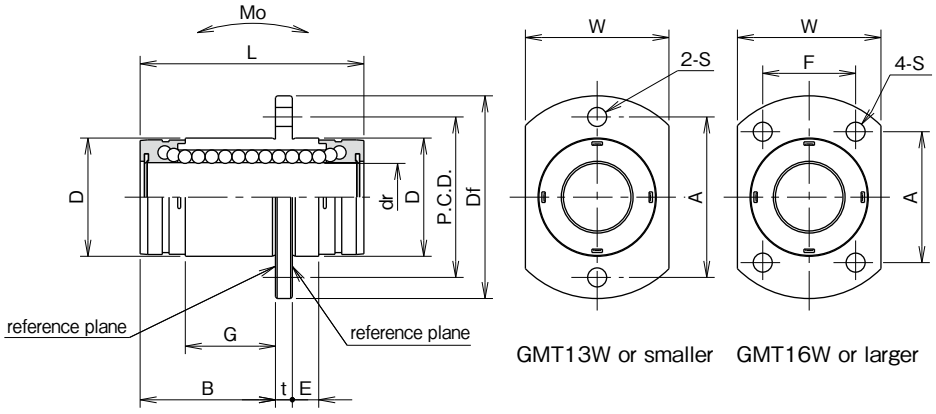

*Both sides of the flange can be used as a reference plane.

part number	number of ball circuits	dr mm	dr tolerance μm	D mm	D tolerance μm	L mm	B mm	G mm	E mm
						major dimensions			
GMT 6W UU-E	4	6	0 −10	12	0 −13	28	13.8	7.6	4
GMT 8W UU-E	4	8		15		36	21.1	14.2	4
GMT10W UU-E	4	10		19	0 −16	41	24.2	15.4	4
GMT12W UU-E	4	12		21		46	30.2	22.4	4
GMT13W UU-E	4	13		23		48	30.65	21.3	4
GMT16W UU-E	4	16		28		53	33.3	22.6	5
GMT20W UU-E	6	20	0 −12	32	0 −19	65	44.2	33.4	5
GMT25W UU-E	6	25		40		91	65.5	50.0	5
GMT30W UU-E	6	30		45		99	69.3	52.6	5

*UU type is standard.

flange Df mm	t mm	W mm	A mm	F mm	S mm	perpendicularity μm	basic load rating dynamic C N	static Co N	allowable static moment Mo N・m	mass g	shaft diameter mm
28	4	18	20	—	3.5	15	323	530	1.5	21	6
32	4	21	24	—	3.5		431	784	3.3	33	8
40	4	25	29	—	4.5		588	1,100	5.0	52	10
42	4	27	32	—	4.5		813	1,570	7.6	65	12
43	4	29	33	—	4.5		813	1,570	8.1	74	13
48	4	34	31	22	4.5		1,230	2,350	13.8	104	16
54	5	38	36	24	5.5	20	1,400	2,740	20.0	171	20
62	5	46	40	32	5.5		1,560	3,140	34.8	331	25
74	8	51	49	35	6.6		2,490	5,490	57.5	447	30

1N≒0.102kgf 1N・m≒0.102kgf・m

www.bergab.ru Берг АБ bergab@ya.ru Тел. (495)-228-06-21, факс (495) 223-3071

www.bergab.ru Берг АБ bergab@ya.ru Тел. (495)-228-06-21, факс (495) 223-3071

GW TYPE (Inch Standard)

– Single Type –

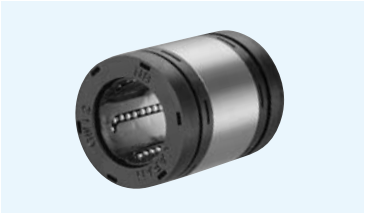

part number structure

example **GW 16 UU**

- GW type
- size
- seal
  - **blank**: without seal
  - **UU**: seals on both sides

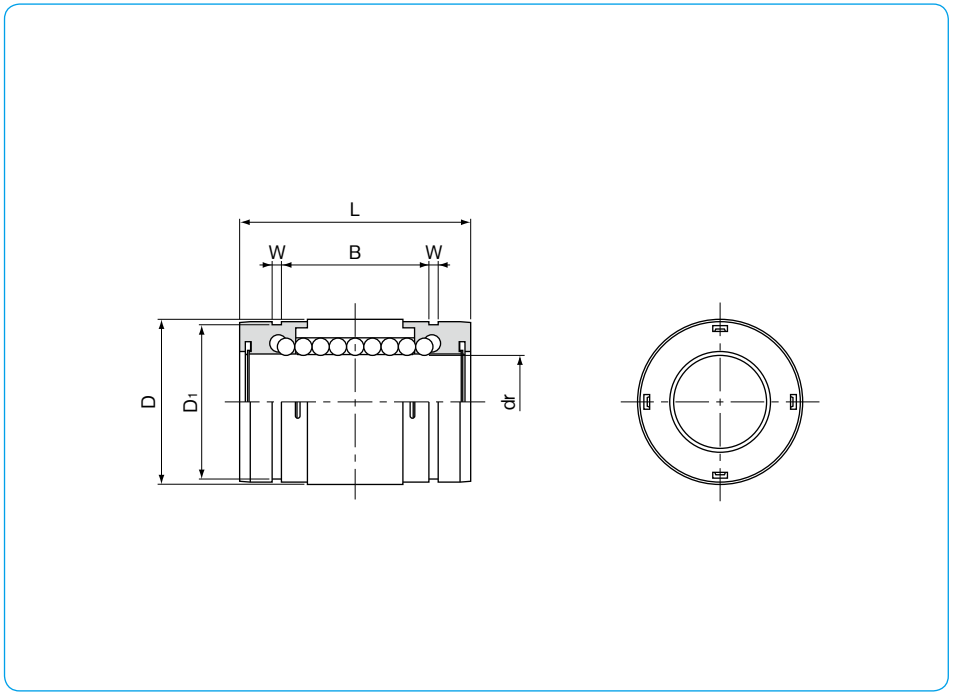

part number	number of ball circuits	dr inch/(mm)	dr tolerance inch/(μm)	D inch/(mm)	D tolerance inch/(μm)	major dimensions L inch/(mm)
GW 4	4	.2500 (6.350)	0 −.00040 (−10)	.5000 (12.700)	0 −.00045 (−11)	.7500 (19.050)
GW 6	4	3750 (9.525)		.6250 (15.875)	0 −.00050 (−13)	.8750 (22.225)
GW 8	4	.5000 (12.700)		.8750 (22.225)		1.2500 (31.750)
GW10	4	.6250 (15.875)		1.1250 (28.575)		1.5000 (38.100)
GW12	6	.7500 (19.050)		1.2500 (31.750)	0 −.00065 (−16)	1.6250 (41.275)
GW16	6	1.0000 (25.400)		1.5625 (39.688)		2.2500 (57.150)
GW20	6	1.2500 (31.750)	0 −.00050 (−12)	2.0000 (50.800)	0 −.00075 (−19)	2.6250 (66.675)

B inch/(mm)	W inch/(mm)	D1 inch/(mm)	basic load rating dynamic C N	basic load rating static Co N	mass g
.4329 (10.996)	.0390 (0.992)	.4687 (11.906)	206	265	5.4
.5577 (14.166)	.0390 (0.992)	.5880 (14.935)	225	314	7.8
.8710 (22.123)	.0459 (1.168)	.8209 (20.853)	510	784	26
.9920 (25.197)	.0559 (1.422)	1.0590 (26.899)	774	1,180	51
1.0538 (26.767)	.0559 (1.422)	1.1760 (29.870)	862	1,370	72
1.6187 (41.115)	.0679 (1.727)	1.4687 (37.306)	980	1,570	138
1.8687 (47.465)	.0679 (1.727)	1.8859 (47.904)	1,570	2,740	269

1N≒0.225lbf 1kg≒2.205lbs

www.bergab.ru Берг АБ bergab@ya.ru Тел. (495)-228-06-21, факс (495) 223-3071

www.bergab.ru Берг АБ bergab@ya.ru Тел. (495)-228-06-21, факс (495) 223-3071

SMA TYPE

– Block Type –

part number structure

example **SMSA 25 G UU**

specification
SMA: standard
SMSA: anti-corrosion

inner contact diameter

retainer material
blank: standard/steel
anti-corrosion/stainless steel
G: resin

seal
blank: without seal
UU: seals on both sides

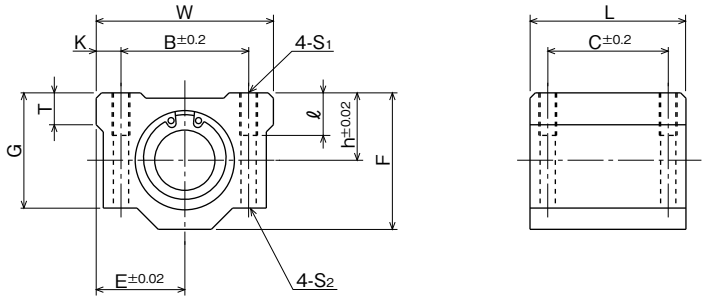

part number	inner contact diameter mm	tolerance μm	h mm	E mm	W mm	L mm	F mm	G mm	T mm
			outer dimensions					major dimensions	
SMA 3GUU	3	0 / −8	5	8	16	13	10	8	–
SMA 4GUU	4		5.5	8.5	17	15	11	9	–
SMA 5GUU	5		7	11	22	18	14	11	–
SMA 6GUU	6	0 / −9	9	15	30	25	18	15	6
SMA 8GUU	8		11	17	34	30	22	18	6
SMA10GUU	10		13	20	40	35	26	21	8
SMA12GUU	12		15	21	42	36	28	24	8
SMA13GUU	13		15	22	44	39	30	24.5	8
SMA16GUU	16		19	25	50	44	38.5	32.5	9
SMA20GUU	20	0 / −10	21	27	54	50	41	35	11
SMA25GUU	25		26	38	76	67	51.5	42	12
SMA30GUU	30		30	39	78	72	59.5	49	15
SMA35GUU	35	0 / −12	34	45	90	80	68	54	18
SMA40GUU	40		40	51	102	90	78	62	20
SMA50GUU	50		52	61	122	110	102	80	25
SMA60GUU	60	0/−15	58	66	132	122	114	94	30

part number	B mm	C mm	K mm	S_1	ℓ mm	S_2 mm	basic load rating dynamic C N	static Co N	※ mass g	shaft diameter mm
	mounting dimensions									
SMA 3GUU	11	8	2.5	M2	–	–	69	105	5	3
SMA 4GUU	12	10	2.5	M3	–	–	88	127	7	4
SMA 5GUU	16	12	3	M3	–	–	167	206	14	5
SMA 6GUU	20	15	5	M4	8	3.4	206	265	34	6
SMA 8GUU	24	18	5	M4	8	3.4	274	392	52	8
SMA10GUU	28	21	6	M5	12	4.3	372	549	92	10
SMA12GUU	30.5	26	5.75	M5	12	4.3	510	784	102	12
SMA13GUU	33	26	5.5	M5	12	4.3	510	784	120	13
SMA16GUU	36	34	7	M5	12	4.3	774	1,180	200	16
SMA20GUU	40	40	7	M6	12	5.2	882	1,370	255	20
SMA25GUU	54	50	11	M8	18	7	980	1,570	600	25
SMA30GUU	58	58	10	M8	18	7	1,570	2,740	735	30
SMA35GUU	70	60	10	M8	18	7	1,670	3,140	1,100	35
SMA40GUU	80	60	11	M10	25	8.7	2,160	4,020	1,590	40
SMA50GUU	100	80	11	M10	25	8.7	3,820	7,940	3,340	50
SMA60GUU	108	90	12	M12	25	10.7	4,700	10,000	4,270	60

* Mass of resin retainer type

1N≒0.102kgf

www.bergab.ru Берг АБ bergab@ya.ru Тел. (495)-228-06-21, факс (495) 223-3071

www.bergab.ru Берг АБ bergab@ya.ru Тел. (495)-228-06-21, факс (495) 223-3071

SMA-W TYPE

– Double-Wide Block Type –

part number structure

example **SMSA 25 G W UU**

- **SMSA**: specification — **SMA**: standard; **SMSA**: anti-corrosion
- **25**: inner contact diameter
- **G**: retainer material — **blank**: standard/steel; anti-corrosion/stainless steel; **G**: resin
- **W**: double-wide type
- **UU**: seal — **blank**: without seal; **UU**: seals on both sides

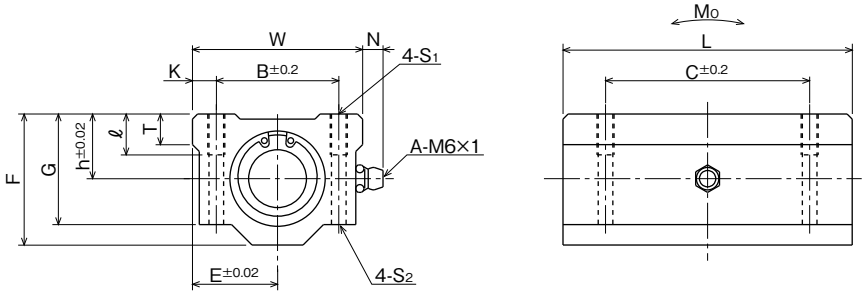

part number	inner contact diameter mm	tolerance μm	h mm	E mm	W mm	L mm	F mm	G mm	T mm	N mm
			outer dimensions						major dimensions	
SMA 3GWUU	3	0 −8	5	8	16	23	10	8	–	–
SMA 4GWUU	4		5.5	8.5	17	27	11	9	–	–
SMA 5GWUU	5		7	11	22	33	14	11	–	–
SMA 6GWUU	6	0 −9	9	15	30	48	18	15	6	7
SMA 8GWUU	8		11	17	34	58	22	18	6	7
SMA10GWUU	10		13	20	40	68	26	21	8	7
SMA12GWUU	12		15	21	42	70	28	24	8	6.5
SMA13GWUU	13		15	22	44	75	30	24.5	8	6.5
SMA16GWUU	16		19	25	50	85	38.5	32.5	9	6
SMA20GWUU	20	0 −10	21	27	54	96	41	35	11	7
SMA25GWUU	25		26	38	76	130	51.5	42	12	4
SMA30GWUU	30		30	39	78	140	59.5	49	15	5
SMA35GWUU	35	0 −12	34	45	90	155	68	54	18	5.5
SMA40GWUU	40		40	51	102	175	78	62	20	5
SMA50GWUU	50		52	61	122	215	102	80	25	5
SMA60GWUU	60	0/−15	58	66	132	240	114	94	30	5

B mm	C mm	K mm	S_1	ℓ mm	S_2 mm	basic load rating dynamic C N	static Co N	allowable static moment Mo N・m	※ mass g	shaft diameter mm
mounting dimensions										
11	16	2.5	M2	–	–	108	206	0.49	10	3
12	20	2.5	M3	–	–	137	255	0.72	13	4
16	25	3	M3	–	–	265	412	1.54	27	5
20	36	5	M4	8	3.4	323	530	2.18	63	6
24	42	5	M4	8	3.4	431	784	4.31	102	8
28	46	6	M5	12	4.3	588	1,100	7.24	180	10
30.5	50	5.75	M5	12	4.3	813	1,570	10.9	205	12
33	50	5.5	M5	12	4.3	813	1,570	11.6	240	13
36	60	7	M5	12	4.3	1,230	2,350	19.7	400	16
40	70	7	M6	12	5.2	1,400	2,740	26.8	570	20
54	100	11	M8	18	7	1,560	3,140	43.4	1,200	25
58	110	10	M8	18	7	2,490	5,490	82.8	1,480	30
70	120	10	M8	18	7	2,650	6,270	110	2,200	35
80	140	11	M10	25	8.7	3,430	8,040	147	3,200	40
100	160	11	M10	25	8.7	6,080	15,900	397	6,700	50
108	180	12	M12	25	10.7	7,550	20,000	530	8,560	60

* Mass of resin retainer type

1N≒0.102kgf 1N・m≒0.102kgf・m

www.bergab.ru Берг АБ bergab@ya.ru Тел. (495)-228-06-21, факс (495) 223-3071

www.bergab.ru Берг АБ bergab@ya.ru Тел. (495)-228-06-21, факс (495) 223-3071

AK TYPE

– Compact Block Type –

part number structure

example **AKS 25 G UU**

specification
AK: standard
AKS: anti-corrosion

inner contact diameter

retainer material
blank: standard/steel
anti-corrosion/stainless steel
G: resin

seal
blank: without seal
UU: seals on both sides

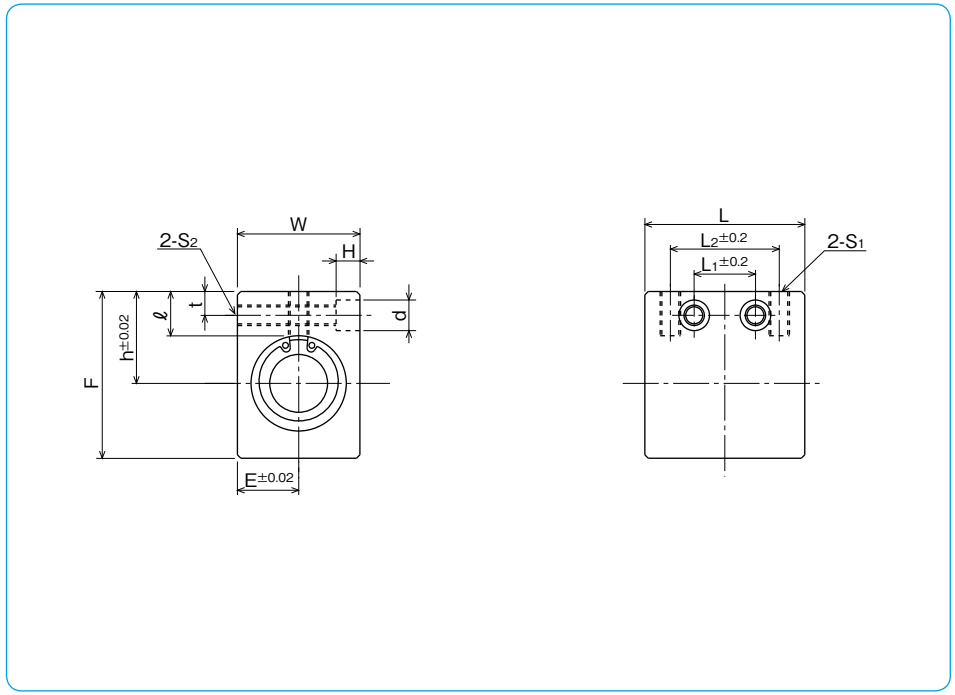

part number	inner contact diameter mm	tolerance μm	h mm	E mm	W mm	L mm	F mm	L2 mm	S1
			outer dimensions				major dimensions		
AK 6GUU	6	0 −9	14	8	16	27	22	18	M4
AK 8GUU	8		16	10	20	32	26	20	M5
AK10GUU	10		19	13	26	39	32	27	M6
AK12GUU	12		20	14	28	40	34	27	M6
AK13GUU	13		25	15	30	42	43	28	M6
AK16GUU	16		27	18	36	47	49	32	M6
AK20GUU	20	0 −10	31	21	42	52	54	36	M8
AK25GUU	25		37	26	52	69	65	42	M10
AK30GUU	30		40	29	58	74	71	44	M10

mounting dimensions ℓ mm	L1 mm	t mm	S2	d mm	H mm	basic load rating dynamic C N	static Co N	※ mass g	shaft diameter mm
8	9	5	M4	6	5	206	265	21.5	6
8.5	10	5	M4	6	5	274	392	40	8
9.5	15	6	M5	8	6	372	549	80	10
9.5	15	6	M5	8	6	510	784	90	12
13.5	16	7	M6	9	7	510	784	132	13
13	18	7	M6	9	7	774	1,180	204	16
15	18	8	M8	11	8	882	1,370	272	20
17	22	9	M10	14	10	980	1,570	574	25
17.5	22	9	M10	14	10	1,570	2,740	710	30

* Mass of resin retainer type

1N≒0.102kgf

www.bergab.ru Берг АБ bergab@ya.ru Тел. (495)-228-06-21, факс (495) 223-3071

www.bergab.ru Берг АБ bergab@ya.ru Тел. (495)-228-06-21, факс (495) 223-3071

AK-W TYPE

— Double-Wide Compact Block Type —

part number structure

example **AKS 25 G W UU**

- **AKS**: specification
  - **AK**: standard
  - **AKS**: anti-corrosion
- **25**: inner contact diameter
- **G**: retainer material
  - **blank**: standard/steel
  - anti-corrosion/stainless steel
  - **G**: resin
- **W**: double-wide type
- **UU**: seal
  - **blank**: without seal
  - **UU**: seals on both sides

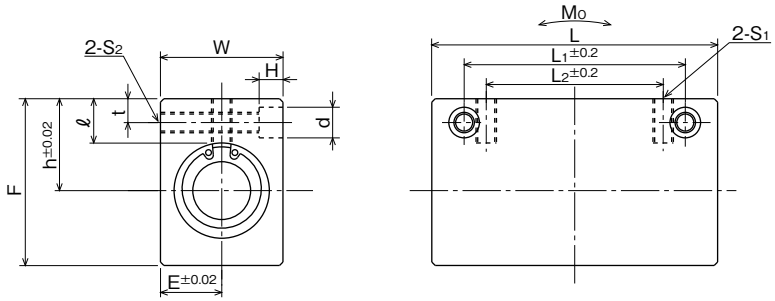

part number	inner contact diameter mm	tolerance μm	h mm	E mm	W mm	L mm	F mm	L2 mm	S1
			outer dimensions				major dimensions		
AK 6GWUU	6	0 −9	14	8	16	46	22	20	M4
AK 8GWUU	8		16	10	20	56	26	30	M5
AK10GWUU	10		19	13	26	68	32	36	M6
AK12GWUU	12		20	14	28	70	34	36	M6
AK13GWUU	13		25	15	30	74	43	42	M6
AK16GWUU	16		27	18	36	84	49	52	M6
AK20GWUU	20	0 −10	31	21	42	94	54	58	M8
AK25GWUU	25		37	26	52	128	65	80	M10
AK30GWUU	30		40	29	58	138	71	90	M10

mounting dimensions ℓ mm	L1 mm	t mm	S2	d mm	H mm	basic load rating dynamic C N	static Co N	allowable static moment Mo N・m	※ mass g	shaft diameter mm
8	30	5	M4	6	5	323	530	2.18	40	6
8.5	42	5	M4	6	5	431	784	4.31	75	8
9.5	50	6	M5	8	6	588	1,100	7.24	150	10
9.5	50	6	M5	8	6	813	1,570	10.9	168	12
13.5	55	7	M6	9	7	813	1,570	11.6	248	13
13	65	7	M6	9	7	1,230	2,350	19.7	383	16
15	70	8	M8	11	8	1,400	2,740	26.8	520	20
17	100	9	M10	14	10	1,560	3,140	43.4	1,120	25
17.5	110	9	M10	14	10	2,490	5,490	82.8	1,384	30

* Mass of resin retainer type

1N≒0.102kgf 1N・m≒0.102kgf・m

www.bergab.ru Берг АБ bergab@ya.ru Тел. (495)-228-06-21, факс (495) 223-3071

www.bergab.ru Берг АБ bergab@ya.ru Тел. (495)-228-06-21, факс (495) 223-3071

SMB TYPE

– Block Type –

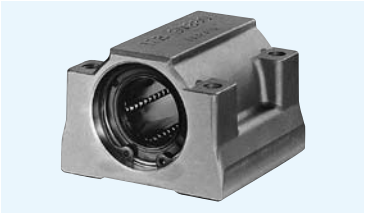

part number structure

example **SMSB 25 G UU**

specification
SMB: standard
SMSB: anti-corrosion

inner contact diameter

retainer material
blank: standard/steel
anti-corrosion/stainless steel
G: resin

seal
blank: without seal
UU: seals on both sides

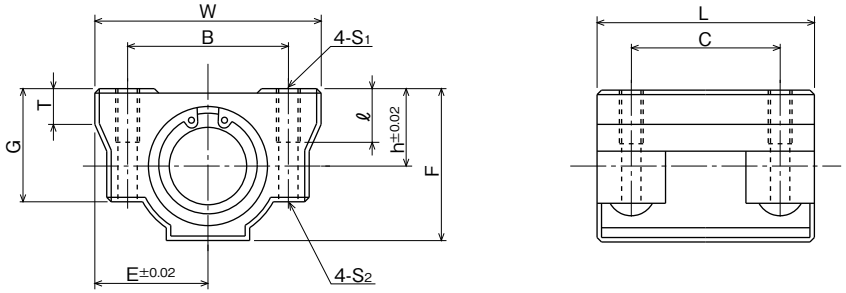

part number	inner contact diameter		major dimensions						
			outer dimensions						
		tolerance	h	E	W	L	F	G	T
	mm	μm	mm	mm	mm	mm	mm	mm	mm
SMB13GUU	13	0	16	22	44	39	31	22	8
SMB16GUU	16	− 9	19	25	50	49	37	28	9
SMB20GUU	20	0	21	27	54	55	41	31	11
SMB25GUU	25	−10	26	38	76	73	51	38	12
SMB30GUU	30		30	39	78	80	57	45	15
SMB40GUU	40	0/−12	40	51	102	96	75	59	22

mounting dimensions					basic load rating		※	shaft
					dynamic	static	mass	diameter
B	C	S_1	ℓ	S_2	C	Co		
mm	mm		mm	mm	N	N	g	mm
33	26	M5	10	4.3	510	784	120	13
36	34	M5	12	4.3	774	1,180	170	16
40	40	M6	12	5.1	882	1,370	210	20
54	50	M8	18	6.8	980	1,570	500	25
58	58	M8	18	6.8	1,570	2,740	600	30
80	60	M10	25	8.6	2,160	4,020	1,200	40

* Mass of resin retainer type

1N≒0.102kgf

www.bergab.ru Берг АБ bergab@ya.ru Тел. (495)-228-06-21, факс (495) 223-3071

www.bergab.ru Берг АБ bergab@ya.ru Тел. (495)-228-06-21, факс (495) 223-3071

SMP TYPE

— Pillow Block Type —

part number structure

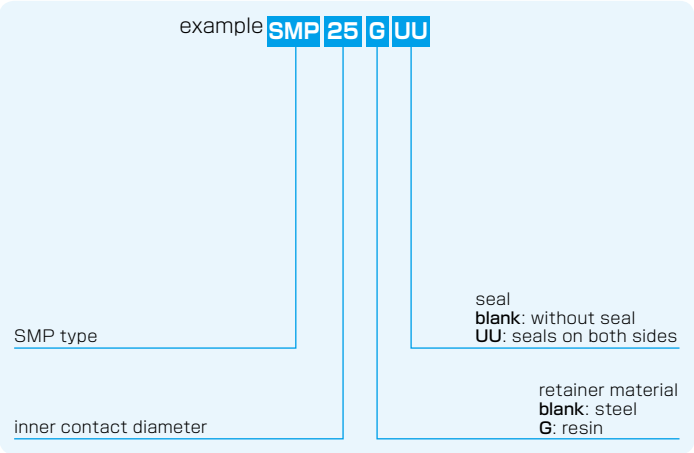

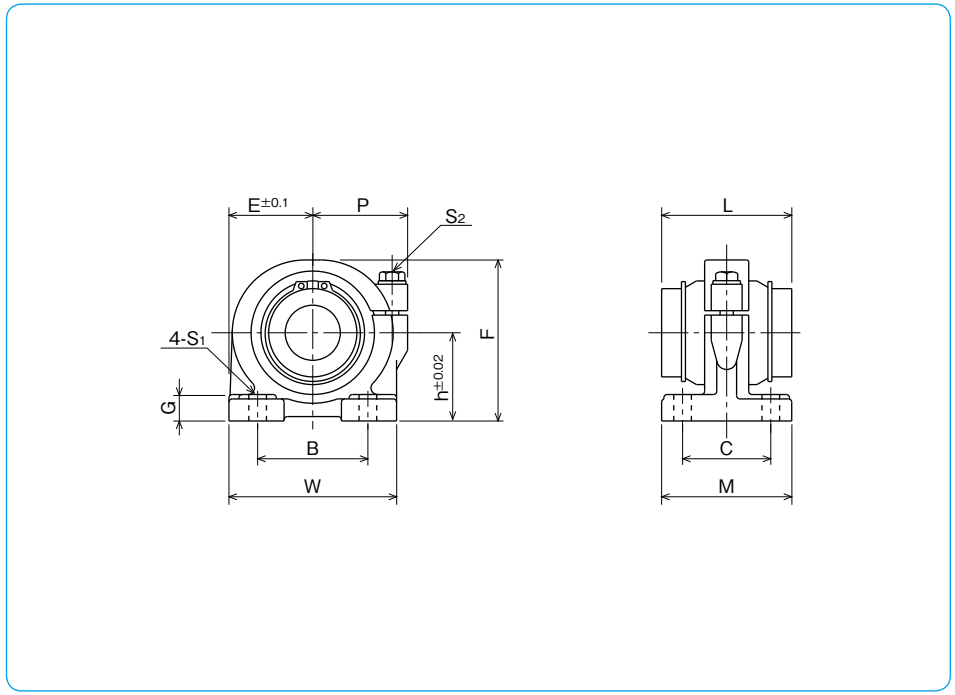

part number	inner contact diameter		outer dimensions					major dimensions	
		tolerance	h	E	W	L	F	G	M
	mm	μm	mm	mm	mm	mm	mm	mm	mm
SMP13GUU	13	0	25	25	50	32	46	8	36
SMP16GUU	16	−9	29	27.5	55	37	53	10	40
SMP20GUU	20	0	34	32.5	65	42	62	12	48
SMP25GUU	25	−10	40	38	76	59	73	12	59
SMP30GUU	30		45	42.5	85	64	84	15	69
SMP35GUU	35	0	50	49	98	70	94	15	76
SMP40GUU	40	−12	60	62	124	80	112	18	86
SMP50GUU	50		70	72	144	100	134	20	105
SMP60GUU	60	0/−15	82	84.5	169	110	154	23	115

mounting dimensions				adjustment screw size	basic load rating		※	shaft diameter
					dynamic	static	mass	
P	B	C	S1	S2	C	Co		
mm	mm	mm	mm		N	N	g	mm
30	30	26	7 (M5)	M5	510	784	270	13
32	35	29	7 (M5)	M5	774	1,180	380	16
37	40	35	8 (M6)	M6	882	1,370	680	20
43	50	40	8 (M6)	M6	980	1,570	1,000	25
49	58	46	10 (M8)	M8	1,570	2,740	1,400	30
58	62	53	12 (M10)	M10	1,670	3,140	2,100	35
68	76	64	12 (M10)	M10	2,160	4,020	3,700	40
80	100	70	14 (M12)	M12	3,820	7,940	6,100	50
88	115	80	14 (M12)	M12	4,700	10,000	8,700	60

* Mass of resin retainer type

1N≒0.102kgf

www.bergab.ru Берг АБ bergab@ya.ru Тел. (495)-228-06-21, факс (495) 223-3071

www.bergab.ru Берг АБ bergab@ya.ru Тел. (495)-228-06-21, факс (495) 223-3071

SMJ TYPE

– Clearance Adjustable Type –

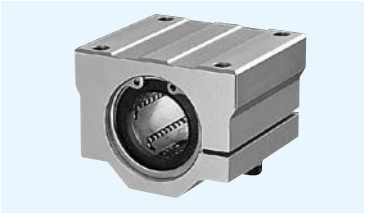

part number structure

example **SMSJ 25 G UU**

- **SMSJ**: specification
  - **SMJ**: standard
  - **SMSJ**: anti-corrosion
- **25**: inner contact diameter
- **G**: retainer material
  - **blank**: standard/steel*
  - anti-corrosion/stainless steel*
  - **G**: resin
- **UU**: seal
  - **blank**: without seal
  - **UU**: seals on both sides

*Size 10 is provided with resin retainer type only.

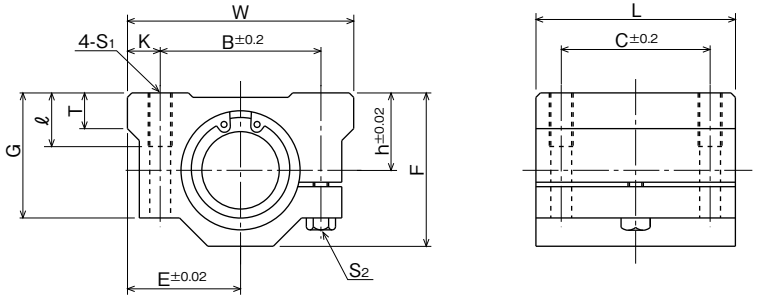

part number	inner contact diameter mm	outer dimensions h mm	E mm	W mm	L mm	F mm	G mm	major dimensions T mm	B mm
SMJ10GUU	10	13	20	40	35	26	21	8	28
SMJ12GUU	12	15	21	42	36	28	24	8	30.5
SMJ13GUU	13	15	22	44	39	30	24.5	8	33
SMJ16GUU	16	19	25	50	44	38.5	32.5	9	36
SMJ20GUU	20	21	27	54	50	41	35	11	40
SMJ25GUU	25	26	38	76	67	51.5	42	12	54
SMJ30GUU	30	30	39	78	72	59.5	49	15	58
SMJ35GUU	35	34	45	90	80	68	54	18	70
SMJ40GUU	40	40	51	102	90	78	62	20	80
SMJ50GUU	50	52	61	122	110	102	80	25	100
SMJ60GUU	60	58	66	132	122	114	94	30	108

mounting dimensions C mm	K mm	S_1	ℓ mm	adjustment screw size S_2	basic load rating dynamic C N	static Co N	※ mass g	shaft diameter mm
21	6	M5	12	M4	372	549	92	10
26	5.75	M5	12	M4	510	784	102	12
26	5.5	M5	12	M4	510	784	120	13
34	7	M5	12	M4	774	1,180	200	16
40	7	M6	12	M5	882	1,370	255	20
50	11	M8	18	M6	980	1,570	600	25
58	10	M8	18	M6	1,570	2,740	735	30
60	10	M8	18	M6	1,670	3,140	1,100	35
60	11	M10	25	M8	2,160	4,020	1,590	40
80	11	M10	25	M8	3,820	7,940	3,340	50
90	12	M12	25	M10	4,700	10,000	4,270	60

* Mass of resin retainer type

1N≒0.102kgf

www.bergab.ru Берг АБ bergab@ya.ru Тел. (495)-228-06-21, факс (495) 223-3071

www.bergab.ru Берг АБ bergab@ya.ru Тел. (495)-228-06-21, факс (495) 223-3071

SME TYPE
– Open Block Type –

part number structure

example **SMSE 25 G UU**

- **SMSE**: specification
  - **SME**: standard
  - **SMSE**: anti-corrosion
- **25**: inner contact diameter
- **G**: retainer material
  - **blank**: standard/steel*
  - anti-corrosion/stainless steel*
  - **G**: resin
- **UU**: seal
  - **blank**: without seal
  - **UU**: seals on both sides

*Size 10 is provided with resin retainer type only.

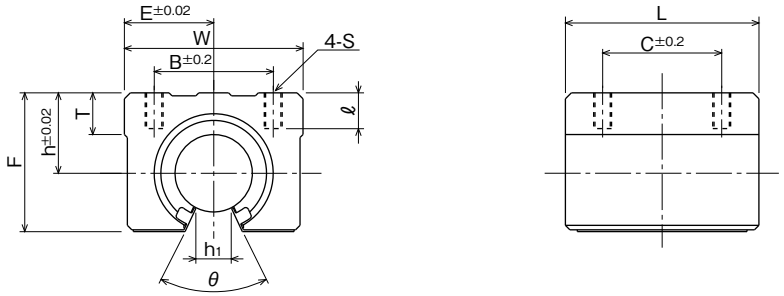

part number	inner contact diametermm	outer dimensions h mm	E mm	W mm	L mm	F mm	T mm	major dimensions h1 mm	θ
SME10GUU	10	15	18	36	32	24	7	6	80°
SME13GUU	13	17	20	40	39	28	8	8.5	80°
SME16GUU	16	20	22.5	45	45	33	9	10	80°
SME20GUU	20	23	24	48	50	39	11	10	60°
SME25GUU	25	27	30	60	65	47	14	11.5	50°
SME30GUU	30	33	35	70	70	56	15	14	50°
SME35GUU	35	37	40	80	80	63	18	16	50°
SME40GUU	40	42	45	90	90	72	20	19	50°
SME50GUU	50	53	60	120	110	92	25	23	50°

mounting dimensions B mm	C mm	S	ℓ mm	basic load rating dynamic C N	static Co N	※ mass g	shaft diameter mm
25	20	M5	10	372	549	65	10
28	26	M5	10	510	784	100	13
32	30	M5	12	774	1,180	150	16
35	35	M6	12	882	1,370	200	20
40	40	M6	12	980	1,570	450	25
50	50	M8	18	1,570	2,740	630	30
55	55	M8	18	1,670	3,140	925	35
65	65	M10	20	2,160	4,020	1,330	40
94	80	M10	20	3,820	7,940	3,000	50

* Mass of resin retainer type

1N≒0.102kgf

www.bergab.ru Берг АБ bergab@ya.ru Тел. (495)-228-06-21, факс (495) 223-3071

www.bergab.ru Берг АБ bergab@ya.ru Тел. (495)-228-06-21, факс (495) 223-3071

SME-W TYPE

– Double-wide Open Block Type –

part number structure

example **SMSE 25 G W UU**

- **SMSE**: specification
  - **SME**: standard
  - **SMSE**: anti-corrosion
- **25**: inner contact diameter
- **G**: retainer material
  - **blank**: standard/steel*
  - anti-corrosion/stainless steel*
  - **G**: resin
- **W**: double-wide type
- **UU**: seal
  - **blank**: without seal
  - **UU**: seals on both sides

*Size 10 is provided with resin retainer type only.

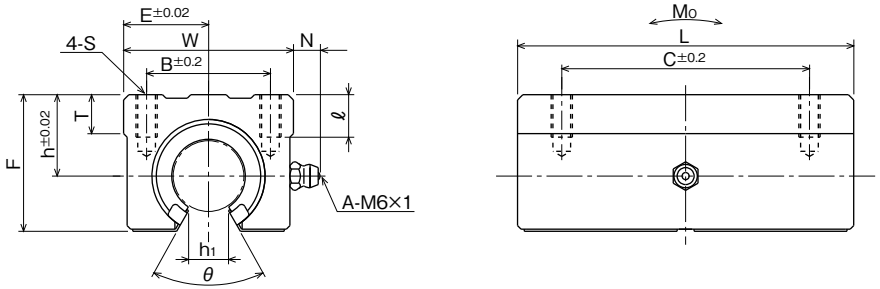

part number	inner contact diameter mm	outer dimensions h mm	E mm	W mm	L mm	F mm	T mm	N mm	major dimensions h_1 mm	θ
SME10GWUU	10	15	18	36	65	24	7	7.5	6	80°
SME13GWUU	13	17	20	40	75	28	8	7.5	8.5	80°
SME16GWUU	16	20	22.5	45	85	33	9	7.5	10	80°
SME20GWUU	20	23	24	48	95	39	11	7.5	10	60°
SME25GWUU	25	27	30	60	130	47	14	7.5	11.5	50°
SME30GWUU	30	33	35	70	140	56	15	7.5	14	50°

mounting dimensions B mm	C mm	S	ℓ mm	basic load rating dynamic C N	static Co N	allowable static moment Mo N・m	※ mass g	shaft diameter mm
25	40	M5	10	588	1,100	4.63	140	10
28	50	M5	10	813	1,570	7.42	200	13
32	60	M5	12	1,230	2,350	12.6	300	16
35	70	M6	12	1,400	2,740	14.5	400	20
40	90	M6	12	1,560	3,140	24.7	900	25
50	100	M8	18	2,490	5,490	47.2	1,260	30

* Mass of resin retainer type

1N≒0.102kgf 1N・m≒0.102kgf・m

www.bergab.ru Берг АБ bergab@ya.ru Тел. (495)-228-06-21, факс (495) 223-3071

www.bergab.ru Берг АБ bergab@ya.ru Тел. (495)-228-06-21, факс (495) 223-3071

SMD TYPE

— Open Block with Clearance Adjustable Type —

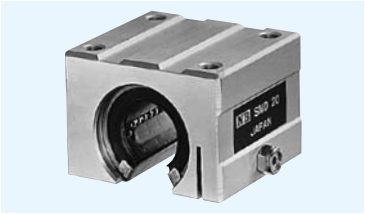

part number structure

example **SMSD 25 G UU**

- **SMSD**: specification
  - **SMD**: standard
  - **SMSD**: anti-corrosion
- **25**: inner contact diameter
- **G**: retainer material
  - **blank**: standard/steel
  - anti-corrosion/stainless steel
  - **G**: resin
- **UU**: seal
  - **blank**: without seal
  - **UU**: seals on both sides

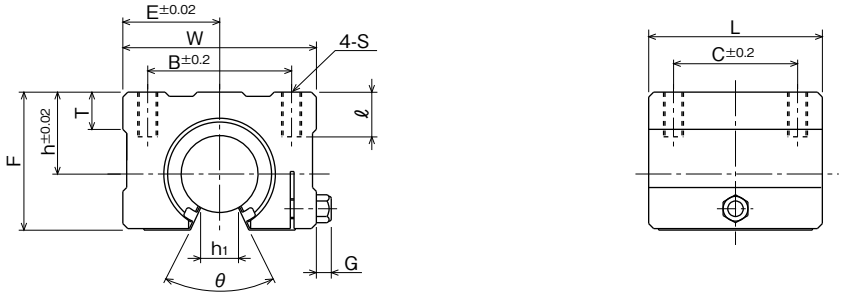

part number	inner contact diameter mm	outer dimensions h mm	E mm	W mm	L mm	F mm	T mm	G mm	major dimensions h1 mm	θ
SMD16GUU	16	20	25	50	45	33	9	6	10	80°
SMD20GUU	20	23	27	54	50	39	11	7	10	60°
SMD25GUU	25	27	38	76	65	47	14	7	11.5	50°
SMD30GUU	30	33	39	78	70	56	15	7	14	50°

mounting dimensions B mm	C mm	S	ℓ mm	basic load rating dynamic C N	static Co N	※ mass g	shaft diameter mm
36	30	M5	12	774	1,180	170	16
40	35	M6	12	882	1,370	240	20
54	40	M6	12	980	1,570	580	25
58	50	M8	18	1,570	2,740	720	30

* Mass of resin retainer type

1N≒0.102kgf

www.bergab.ru Берг АБ bergab@ya.ru Тел. (495)-228-06-21, факс (495) 223-3071

www.bergab.ru Берг АБ bergab@ya.ru Тел. (495)-228-06-21, факс (495) 223-3071

RB TYPE

– Resin Block Type –

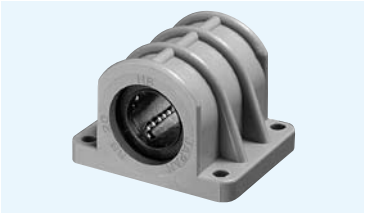

part number structure

example RB 20

RB type

inner contact diameter

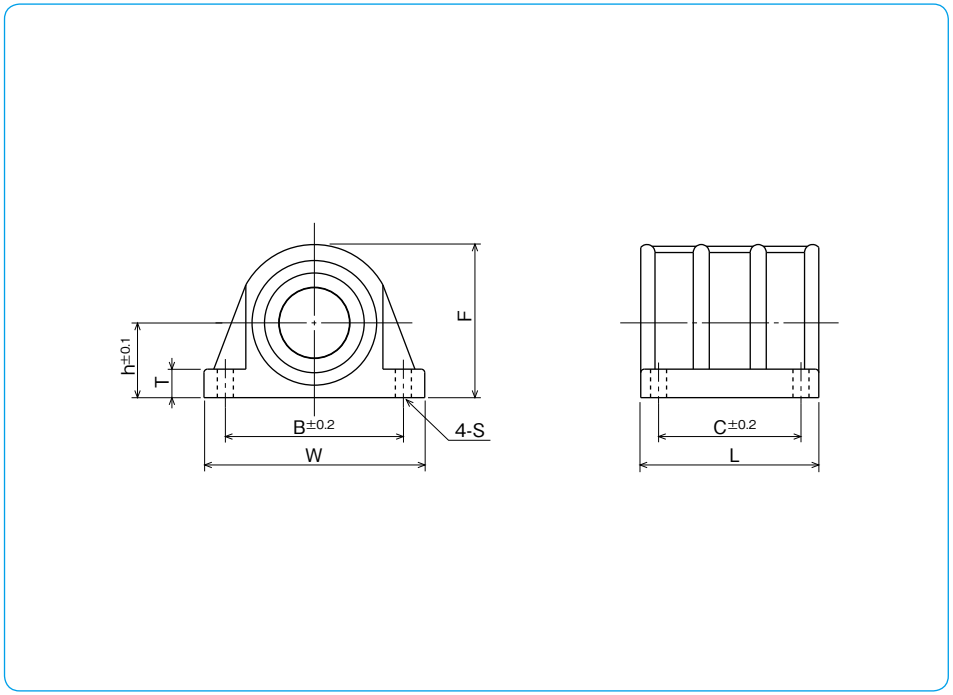

part number	inner contact diameter		major dimensions outer dimensions				mounting dimensions				basic load rating		mass	shaft diameter
		tolerance	h	W	L	F	T	B	C	S	dynamic C	static Co		
	mm	μm	mm	mm	mm	mm	mm	mm	mm	mm	N	N	g	mm
RB10	10	0 −9	13	45	35	26.5	6	35	21	4.5	372	549	43	10
RB12	12		15	50	36	30	6.5	40	26	4.5	510	784	50	12
RB13	13		15	50	39	31	6.5	40	26	4.5	510	784	63	13
RB16	16		19	56	44	38.5	7	46	34	4.5	774	1,180	99	16
RB20	20	0/−10	21	62	50	43	8	50	40	5.5	882	1,370	127	20

RB has seals as standard.

1N≒0.102kgf

www.bergab.ru Берг АБ bergab@ya.ru Тел. (495)-228-06-21, факс (495) 223-3071

www.bergab.ru Берг АБ bergab@ya.ru Тел. (495)-228-06-21, факс (495) 223-3071

CE TYPE

– Non-Clearance Adjustable Type –

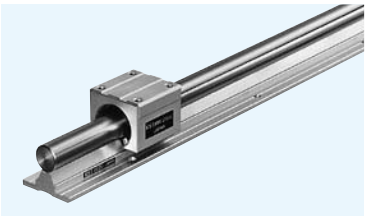

part number structure

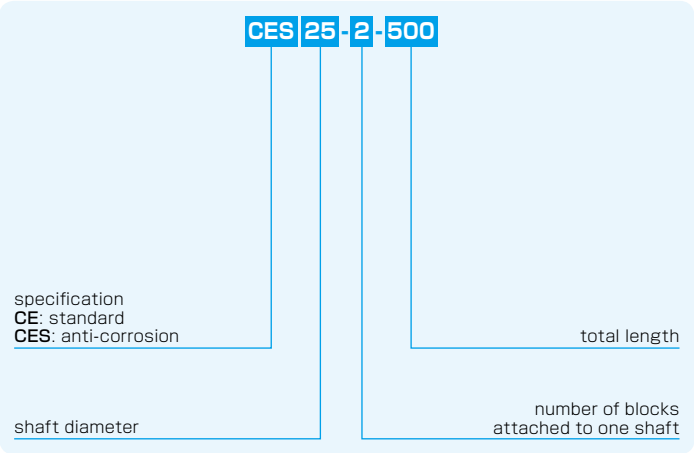

※Bush inside is a resin retainer type with seals.

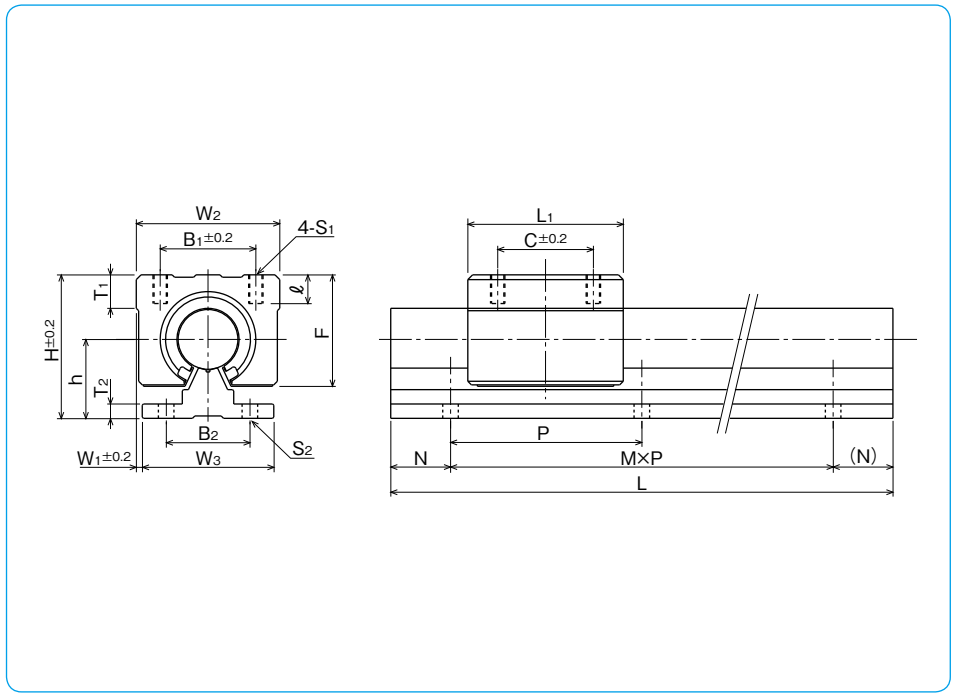

part number standard	part number anti-corrosion	shaft diameter mm	assembly dimension H mm	h mm	W1 mm	block dimension W2 mm	L1 mm	B1 mm	C mm	T1 mm	ℓ mm	S1	F mm	major dimensions W3 mm	B2 mm	T2 mm	P mm	S2 mm
CE16	**CES16**	16	45	25	2.5	45	45	32	30	9	12	M5	33	40	30	5	150	5.5
CE20	**CES20**	20	50	27	1.5	48	50	35	35	11	12	M6	39	45	30	5	150	5.5
CE25	**CES25**	25	60	33	2.5	60	65	40	40	14	12	M6	47	55	35	6	200	6.5
CE30	**CES30**	30	70	37	5	70	70	50	50	15	18	M8	56	60	40	7	200	6.5

rail dimensions L (M,N) mm				basic load rating dynamic C N	static Co N	mass block g	rail kg/m	size
300 (1,75) 1,500 (9,75)	500 (3,25) 1,800 (11,75)	800 (5,25) 2,000 (13,25)	1,000 (6,50)	774	1,180	150	2.58	**16**
300 (1,75) 1,500 (9,75)	500 (3,25) 1,800 (11,75)	800 (5,25) 2,000 (13,25)	1,000 (6,50)	882	1,370	200	3.49	**20**
300 (1,50) 1,500 (7,50)	500 (2,50) 1,800 (8,100)	800 (3,100) 2,000 (9,100)	1,000 (4,100)	980	1,570	450	5.31	**25**
300 (1,50) 1,500 (7,50)	500 (2,50) 1,800 (8,100)	800 (3,100) 2,000 (9,100)	1,000 (4,100)	1,570	2,740	630	7.39	**30**

1N≒0.102kgf

www.bergab.ru Берг АБ bergab@ya.ru Тел. (495)-228-06-21, факс (495) 223-3071

www.bergab.ru Берг АБ bergab@ya.ru Тел. (495)-228-06-21, факс (495) 223-3071

CD TYPE

– Clearance Adjustable Type –

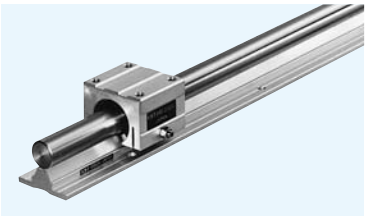

part number structure

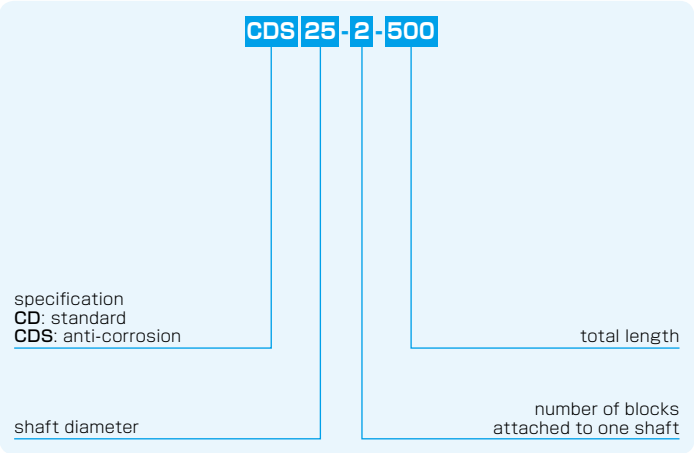

※Bush inside is a resin retainer type with seals.

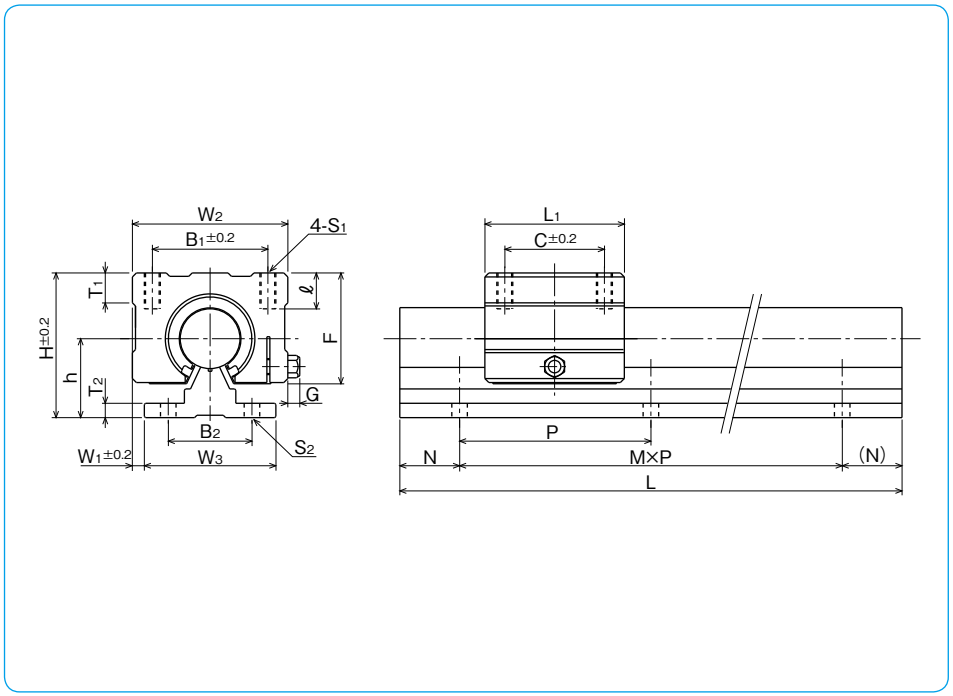

part number standard	part number anti-corrosion	shaft diameter mm	assembly dimensions H mm	h mm	W1 mm	block dimensions W2 mm	L1 mm	B1 mm	C mm	T1 mm	ℓ mm	S1	G mm	F mm	major dimensions W3 mm	B2 mm	T2 mm	P mm	S2 mm
CD16	**CDS16**	16	45	25	5	50	45	36	30	9	12	M5	6	33	40	30	5	150	5.5
CD20	**CDS20**	20	50	27	4.5	54	50	40	35	11	12	M6	7	39	45	30	5	150	5.5
CD25	**CDS25**	25	60	33	10.5	76	65	54	40	14	12	M6	7	47	55	35	6	200	6.5
CD30	**CDS30**	30	70	37	9	78	70	58	50	15	18	M8	7	56	60	40	7	200	6.5

rail dimensions L (M,N) mm	basic load rating dynamic C N	static Co N	mass block g	rail kg/m	size
300 (1,75) 500 (3,25) 800 (5,25) 1,000 (6,50) 1,500 (9,75) 1,800 (11,75) 2,000 (13,25)	774	1,180	170	2.58	**16**
300 (1,75) 500 (3,25) 800 (5,25) 1,000 (6,50) 1,500 (9,75) 1,800 (11,75) 2,000 (13,25)	882	1,370	240	3.49	**20**
300 (1,50) 500 (2,50) 800 (3,100) 1,000 (4,100) 1,500 (7,50) 1,800 (8,100) 2,000 (9,100)	980	1,570	580	5.31	**25**
300 (1,50) 500 (2,50) 800 (3,100) 1,000 (4,100) 1,500 (7,50) 1,800 (8,100) 2,000 (9,100)	1,570	2,740	720	7.39	**30**

1N≒0.102kgf

www.bergab.ru Берг АБ bergab@ya.ru Тел. (495)-228-06-21, факс (495) 223-3071

www.bergab.ru Берг АБ bergab@ya.ru Тел. (495)-228-06-21, факс (495) 223-3071

SWA TYPE (Inch Standard)

— Block Type —

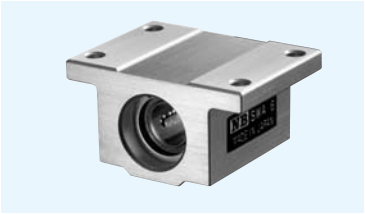

part number structure

example **SWA 20 G R UU**

specification
SWA: standard
SWSA: anti-corrosion

size

retainer material
blank: standard/steel
anti-corrosion/stainless steel
G: resin

self-aligning
(SWA-resin retainer only)

seal
blank: without seal
UU: seals on both sides

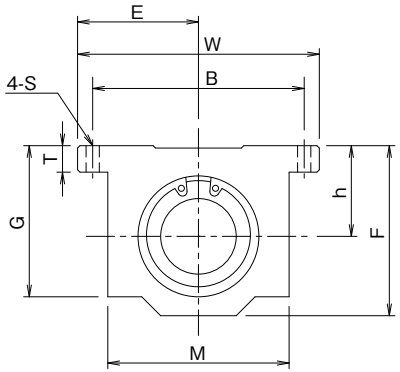

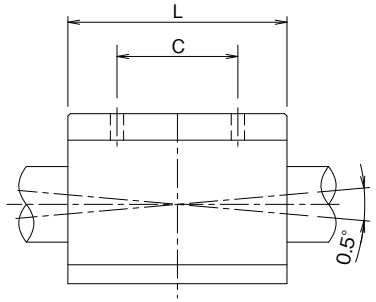

self-aligning in all directions
by using SWA···GRUU

part number	inner contact diameter inch/(mm)	tolerance inch/(μm)	h ±.001/(±0.02) inch/(mm)	E ±.001/(±0.02) inch/(mm)	W inch/(mm)	L inch/(mm)	F inch/(mm)	T inch/(mm)	G inch/(mm)	M inch/(mm)	B ±.01/(±0.2) inch/(mm)	C ±.01/(±0.2) inch/(mm)	S inch/(mm)	basic load rating dynamic C N	basic load rating static Co N	mass g
			major dimensions outer dimensions					mounting dimensions								
SWA 4GUU	.2500 (6.350)	0 −.00040 (−9)	.4370 (11.100)	.8125 (20.638)	1.625 (41.28)	1.188 (30.16)	.813 (20.64)	.188 (4.76)	.750 (19.05)	1.000 (25.40)	1.312 (33.33)	.750 (19.05)	.156 (4.0)	206	265	45
SWA 6GUU	.3750 (9.525)		.5000 (12.700)	.8750 (22.225)	1.750 (44.45)	1.313 (33.34)	.938 (23.82)	.188 (4.76)	.875 (22.23)	1.125 (28.58)	1.437 (36.50)	.875 (22.23)	.156 (4.0)	225	314	62
SWA 8GUU	.5000 (12.700)		.6870 (17.450)	1.0000 (25.400)	2.000 (50.80)	1.688 (42.86)	1.250 (31.75)	.250 (6.35)	1.125 (28.58)	1.375 (34.93)	1.688 (42.88)	1.000 (25.40)	.156 (4.0)	510	784	130
SWA 10GUU	.6250 (15.875)		.8750 (22.225)	1.2500 (31.750)	2.500 (63.50)	1.938 (49.21)	1.625 (41.28)	.281 (7.14)	1.437 (36.50)	1.750 (44.45)	2.125 (53.98)	1.125 (28.58)	.188 (4.8)	774	1,180	240
SWA 12GUU	.7500 (19.050)	0 −.00040 (−10)	.9370 (23.800)	1.3750 (34.925)	2.750 (69.85)	2.063 (52.39)	1.750 (44.45)	.313 (7.94)	1.563 (39.69)	1.875 (47.63)	2.375 (60.33)	1.250 (31.75)	.188 (4.8)	862	1,370	290
SWA 16GUU	1.0000 (25.400)		1.1870 (30.150)	1.6250 (41.275)	3.250 (82.55)	2.813 (71.44)	2.188 (55.56)	.375 (9.53)	1.938 (49.21)	2.375 (60.33)	2.875 (73.03)	1.750 (44.45)	.219 (5.6)	980	1,570	615
SWA 20GUU	1.2500 (31.750)	0 −.00050 (−12)	1.5000 (38.100)	2.0000 (50.800)	4.000 (101.60)	3.625 (92.08)	2.813 (71.44)	.438 (11.11)	2.500 (63.50)	3.000 (76.20)	3.500 (88.90)	2.000 (50.80)	.219 (5.6)	1,570	2,740	1,300
SWA 24GUU	1.5000 (38.100)		1.7500 (44.450)	2.3750 (60.325)	4.750 (120.65)	4.000 (101.60)	3.250 (82.55)	.500 (12.70)	2.875 (73.03)	3.500 (88.90)	4.125 (104.78)	2.500 (63.50)	.281 (7.2)	2,160	4,020	1,900
SWA 32GUU	2.0000 (50.800)		2.1250 (53.975)	3.0000 (76.200)	6.000 (152.40)	5.000 (127.00)	4.063 (103.19)	.625 (15.88)	3.625 (92.08)	4.500 (114.30)	5.250 (133.35)	3.250 (82.55)	.406 (10.5)	3,820	7,940	3,600

SI UNIT 1N≒0.225lbf
1kg≒2.205lbs

www.bergab.ru Берг АБ bergab@ya.ru Тел. (495)-228-06-21, факс (495) 223-3071

www.bergab.ru Берг АБ bergab@ya.ru Тел. (495)-228-06-21, факс (495) 223-3071

SWJ TYPE (Inch Standard)

– Clearance Adjustable Block Type –

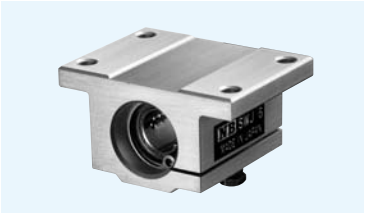

part number structure

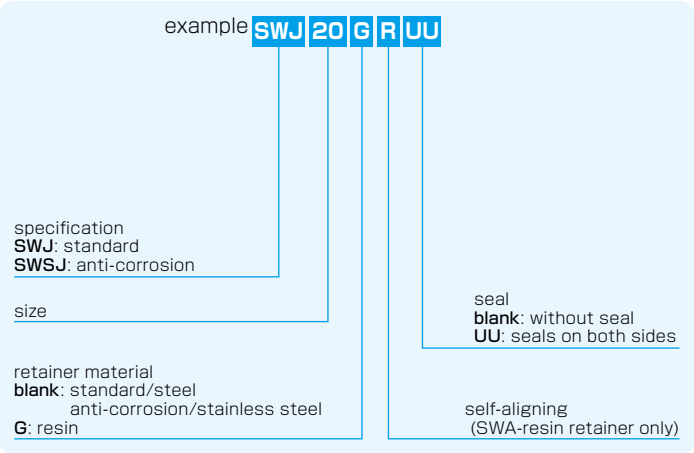

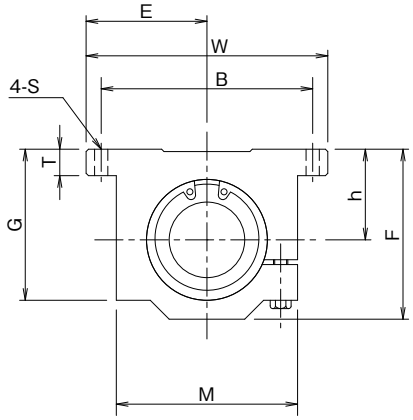

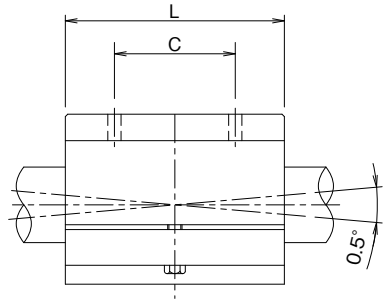

self-aligning in all directions
by using SWJ···GRUU

part number	inner contact diameter inch/(mm)	h ±.001/(±0.02) inch/(mm)	E ±.001/(±0.02) inch/(mm)	W inch/(mm)	major dimensions outer dimensions L inch/(mm)	F inch/(mm)
SWJ 4GUU	.2500 (6.350)	.4370 (11.100)	.8125 (20.638)	1.625 (41.28)	1.188 (30.16)	.813 (20.64)
SWJ 6GUU	.3750 (9.525)	.5000 (12.700)	.8750 (22.225)	1.750 (44.45)	1.313 (33.34)	.938 (23.82)
SWJ 8GUU	.5000 (12.700)	.6870 (17.450)	1.0000 (25.400)	2.000 (50.80)	1.688 (42.86)	1.250 (31.75)
SWJ 10GUU	.6250 (15.875)	.8750 (22.225)	1.2500 (31.750)	2.500 (63.50)	1.938 (49.21)	1.625 (41.28)
SWJ 12GUU	.7500 (19.050)	.9370 (23.800)	1.3750 (34.925)	2.750 (69.85)	2.063 (52.39)	1.750 (44.45)
SWJ 16GUU	1.0000 (25.400)	1.1870 (30.150)	1.6250 (41.275)	3.250 (82.55)	2.813 (71.44)	2.188 (55.56)
SWJ 20GUU	1.2500 (31.750)	1.5000 (38.100)	2.0000 (50.800)	4.000 (101.60)	3.625 (92.08)	2.813 (71.44)
SWJ 24GUU	1.5000 (38.100)	1.7500 (44.450)	2.3750 (60.325)	4.750 (120.65)	4.000 (101.60)	3.250 (82.55)
SWJ 32GUU	2.0000 (50.800)	2.1250 (53.975)	3.0000 (76.200)	6.000 (152.40)	5.000 (127.00)	4.063 (103.19)

T inch/(mm)	G inch/(mm)	M inch/(mm)	mounting dimensions B ±.01/(±0.2) inch/(mm)	C ±.01/(±0.2) inch/(mm)	S inch/(mm)	basic load rating dynamic C N	static Co N	mass g
.188 (4.76)	.750 (19.05)	1.000 (25.40)	1.312 (33.33)	.750 (19.05)	.156 (4.0)	206	265	45
.188 (4.76)	.875 (22.23)	1.125 (28.58)	1.437 (36.50)	.875 (22.23)	.156 (4.0)	225	315	62
.250 (6.35)	1.125 (28.58)	1.375 (34.93)	1.688 (42.88)	1.000 (25.40)	.156 (4.0)	510	784	130
.281 (7.14)	1.437 (36.50)	1.750 (44.45)	2.125 (53.98)	1.125 (28.58)	.188 (4.8)	774	1,180	240
.313 (7.94)	1.563 (39.69)	1.875 (47.63)	2.375 (60.33)	1.250 (31.75)	.188 (4.8)	862	1,370	290
.375 (9.53)	1.938 (49.21)	2.375 (60.33)	2.875 (73.03)	1.750 (44.45)	.219 (5.6)	980	1,570	615
.438 (11.11)	2.500 (63.50)	3.000 (76.20)	3.500 (88.90)	2.000 (50.80)	.219 (5.6)	1,570	2,740	1,300
.500 (12.70)	2.875 (73.03)	3.500 (88.90)	4.125 (104.78)	2.500 (50.80)	.281 (7.2)	2,160	4,020	1,900
.625 (15.88)	3.625 (92.08)	4.500 (114.30)	5.250 (133.35)	3.250 (82.55)	.406 (10.5)	3,820	7,940	3,600

SI UNIT 1N≒0.225lbf
1kg≒2.205lbs

www.bergab.ru Берг АБ bergab@ya.ru Тел. (495)-228-06-21, факс (495) 223-3071

www.bergab.ru Берг АБ bergab@ya.ru Тел. (495)-228-06-21, факс (495) 223-3071

SWD TYPE (Inch Standard)

– Open Block Type –

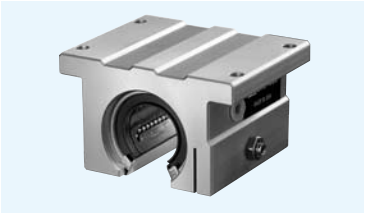

part number structure

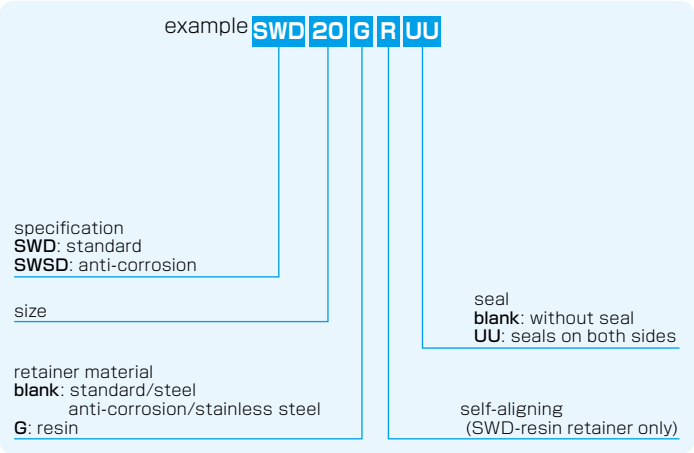

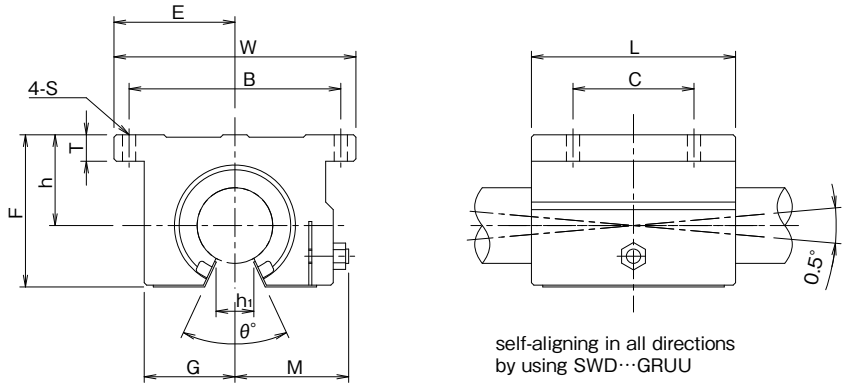

self-aligning in all directions
by using SWD···GRUU

part number	inner contact diameter inch/(mm)	h ±.001/(±0.02) inch/(mm)	E ±.001/(±0.02) inch/(mm)	W inch/(mm)	L inch/(mm)	F inch/(mm)	T inch/(mm)	G inch/(mm)
							major dimensions outer dimensions	
SWD 8GUU	.5000 (12.700)	.6870 (17.450)	1.0000 (25.400)	2.000 (50.80)	1.500 (38.10)	1.100 (27.94)	.250 (6.35)	.688 (17.5)
SWD 10GUU	.6250 (15.875)	.8750 (22.225)	1.2500 (31.750)	2.500 (63.50)	1.750 (44.45)	1.375 (34.93)	.281 (7.14)	.875 (22.23)
SWD 12GUU	.7500 (19.050)	.9370 (23.800)	1.3750 (34.950)	2.750 (69.85)	1.875 (47.63)	1.535 (39.00)	.315 (8.00)	.937 (23.80)
SWD 16GUU	1.0000 (25.400)	1.1870 (30.150)	1.6250 (41.300)	3.250 (82.55)	2.625 (66.68)	1.975 (50.17)	.375 (9.53)	1.188 (30.18)
SWD 20GUU	1.2500 (31.750)	1.5000 (38.100)	2.0000 (50.800)	4.000 (101.60)	3.375 (85.73)	2.485 (63.12)	.437 (11.10)	1.500 (38.10)
SWD 24GUU	1.5000 (38.100)	1.7500 (44.450)	2.3750 (60.325)	4.750 (120.65)	3.750 (95.25)	2.910 (73.90)	.500 (12.70)	1.750 (44.45)
SWD 32GUU	2.0000 (50.800)	2.1250 (53.975)	3.0000 (76.200)	6.000 (152.4)	4.750 (120.65)	3.660 (92.90)	.625 (15.88)	2.250 (57.15)

M inch/(mm)	h_1 inch/(mm)	θ	mounting dimensions B ±.01/(±0.2) inch/(mm)	C ±.01/(±0.2) inch/(mm)	S inch/(mm)	basic load rating dynamic C N	static Co N	mass g
.98 (24.89)	.3425 (8.70)	80°	1.688 (42.88)	1.000 (25.40)	.156 (4.0)	510	784	98
1.15 (29.21)	.375 (9.53)	80°	2.125 (53.98)	1.125 (28.58)	.188 (4.8)	774	1,180	185
1.23 (31.24)	.4375 (11.11)	60°	2.375 (60.33)	1.250 (31.75)	.188 (4.8)	862	1,370	235
1.48 (37.59)	.5625 (14.29)	50°	2.875 (73.03)	1.750 (44.45)	218 (5.6)	980	1,570	530
1.88 (47.75)	.625 (15.88)	50°	3.500 (88.90)	2.000 (50.80)	.218 (5.6)	1,570	2,740	1,080
2.12 (53.85)	.750 (19.05)	50°	4.125 (104.78)	2.500 (63.50)	.281 (7.4)	2,160	4,020	1,620
2.70 (68.58)	1.00 (25.40)	50°	5.250 (133.35)	3.250 (82.55)	.406 (10.5)	3,820	7,940	3,100

SI UNIT 1N≒0.225lbf
1kg≒2.205lbs

www.bergab.ru Берг АБ bergab@ya.ru Тел. (495)-228-06-21, факс (495) 223-3071

www.bergab.ru Берг АБ bergab@ya.ru Тел. (495)-228-06-21, факс (495) 223-3071

RBW TYPE

(Inch Standard ／Anti-Corrosion Type)

— Resin Block Type —

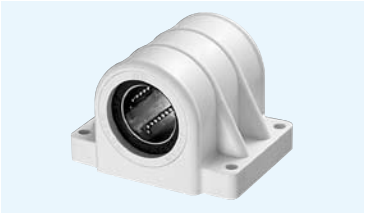

part number structure

example **RBW** **16**

RBW type — size

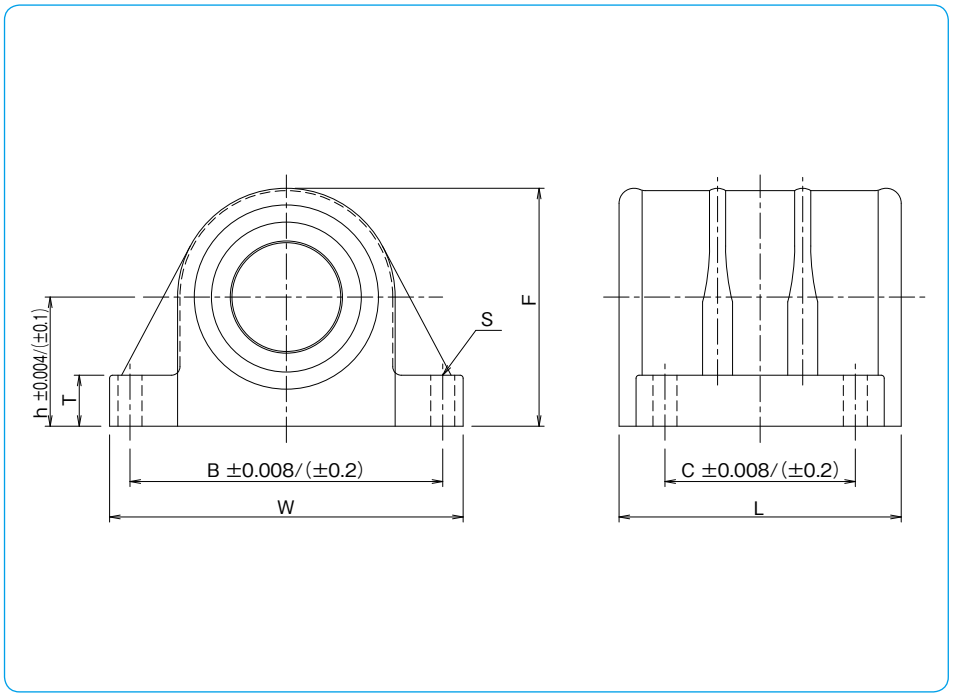

part number	inner contact diameter inch/(mm)	tolerance inch/(μm)	h inch/(mm)	W inch/(mm)	L inch/(mm)	F inch/(mm)	T inch/(mm)	B inch/(mm)	C inch/(mm)	S inch/(mm)	basic load rating dynamic C N	static Co N	mass g
			major dimensions										
			outer dimensions				mounting dimensions						
RBW 8	.5000 (12.700)	0 −0.00040 (−9)	.6870 (17.450)	2.000 (50.80)	1.5937 (40.481)	1.2500 (31.750)	.3437 (8.731)	1.688 (42.875)	1.000 (25.400)	.157 (4.0)	510	784	51
RBW 10	.6250 (15.875)		.8750 (22.225)	2.500 (63.50)	1.8437 (46.831)	1.6250 (41.275)	.3750 (9.525)	2.125 (53.975)	1.125 (28.575)	.189 (4.8)	774	1180	99
RBW 12	.7500 (19.050)	0 −0.00040 (−10)	.9370 (23.800)	2.750 (69.85)	1.9687 (50.006)	1.7500 (44.450)	.4063 (10.319)	2.375 (60.325)	1.250 (31.750)	.189 (4.8)	862	1370	129
RBW 16	1.0000 (25.400)		1.1870 (30.150)	3.250 (82.55)	2.5937 (65.881)	2.1870 (55.550)	.4687 (11.906)	2.875 (73.025)	1.750 (44.450)	.220 (5.6)	980	1570	242

※RBW type has side-seals as standard.

SI UNIT 1N≒0.225lbf
1kg≒2.205lbs

www.bergab.ru Берг АБ bergab@ya.ru Тел. (495)-228-06-21, факс (495) 223-3071

www.bergab.ru Берг АБ bergab@ya.ru Тел. (495)-228-06-21, факс (495) 223-3071

SM TYPE
– Standard Type –

part number structure

example **SMS 25 G UU-P**

specification
SM: standard
SMS: anti-corrosion

inner contact diameter (dr)

retainer material
blank: standard/steel
anti-corrosion/stainless steel
G: resin

seal
blank: without seal
U: seal on one side
UU: seals on both sides

accuracy grade
blank: high
P: precision

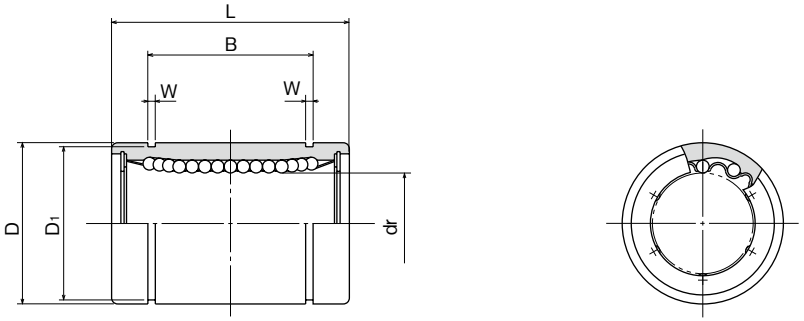

part number				number of ball circuits	dr			major dimensions D	
standard		anti-corrosion				tolerance μm			
steel retainer	resin retainer	stainless retainer	resin retainer		mm	precision	high	mm	tolerance μm
SM 3	SM 3G	SMS 3	SMS 3G	4	3	0 / −5	0 / −8	7	0 / −9
SM 4	SM 4G	SMS 4	SMS 4G	4	4			8	
SM 5	SM 5G	SMS 5	SMS 5G	4	5			10	
SM 6	SM 6G	SMS 6	SMS 6G	4	6	0 / −6	0 / −9	12	0 / −11
SM 8s	SM 8sG	SMS 8s	SMS 8sG	4	8			15	
SM 8	SM 8G	SMS 8	SMS 8G	4	8			15	
SM 10	SM10G	SMS10	SMS10G	4	10			19	0 / −13
SM 12	SM12G	SMS12	SMS12G	4	12			21	
SM 13	SM13G	SMS13	SMS13G	4	13			23	
SM 16	SM16G	SMS16	SMS16G	4	16			28	
SM 20	SM20G	SMS20	SMS20G	5	20	0 / −7	0 / −10	32	0 / −16
SM 25	SM25G	SMS25	SMS25G	6	25			40	
SM 30	SM30G	SMS30	SMS30G	6	30			45	
SM 35	SM35G	SMS35	SMS35G	6	35	0 / −8	0 / −12	52	0 / −19
SM 40	SM40G	SMS40	SMS40G	6	40			60	
SM 50	SM50G	SMS50	SMS50G	6	50			80	
SM 60	SM60G	SMS60	SMS60G	6	60	0 / −9	0 / −15	90	0 / −22
SM 80	SM80G	SMS80	SMS80G	6	80			120	
SM100	–	–	–	6	100	0 / −10	0 / −20	150	0 / −25
SM120	–	–	–	8	120			180	
SM150	–	–	–	8	150	0/−13	0/−25	210	0/−29

L		B		W	D1	eccentricity		radial clearance (maximum)	basic load rating		mass	shaft diameter
									dynamic	static		
mm	tolerance mm	mm	tolerance mm	mm	mm	precision μm	high μm	μm	C N	Co N	g	mm
10	0 / −0.12	–	–	–	–	4	8	− 3	69	105	1.4	3
12		–	–	–	–				88	127	2.0	4
15		10.2	0 / −0.2	1.1	9.6				167	206	4.0	5
19	0 / −0.2	13.5		1.1	11.5	8	12		206	265	8.5	6
17		11.5		1.1	14.3				176	216	11	8
24		17.5		1.1	14.3				274	392	17	8
29		22		1.3	18			− 4	372	549	36	10
30		23		1.3	20				510	784	42	12
32		23		1.3	22				510	784	49	13
37		26.5		1.6	27			− 6	774	1,180	76	16
42		30.5		1.6	30.5	10	15		882	1,370	100	20
59	0 / −0.3	41	0 / −0.3	1.85	38				980	1,570	240	25
64		44.5		1.85	43			− 8	1,570	2,740	270	30
70		49.5		2.1	49	12	20		1,670	3,140	425	35
80		60.5		2.1	57			−10	2,160	4,020	654	40
100		74		2.6	76.5			−13	3,820	7,940	1,700	50
110		85		3.15	86.5	17	25		4,700	10,000	2,000	60
140	0 / −0.4	105.5	0 / −0.4	4.15	116			−20	7,350	16,000	4,520	80
175		125.5		4.15	145	20	30		14,100	34,800	8,600	100
200		158.6		4.15	175			−25	16,400	40,000	15,000	120
240		170.6		5.15	204	25	40		21,100	54,300	20,250	150

1N≒0.102kgf

www.bergab.ru Берг АБ bergab@ya.ru Тел. (495)-228-06-21, факс (495) 223-3071

www.bergab.ru Берг АБ bergab@ya.ru Тел. (495)-228-06-21, факс (495) 223-3071

KB TYPE (Euro Standard)

– Standard Type –

part number structure

example **KBS 25 G UU**

specification
KB: standard
KBS: anti-corrosion

inner contact diameter (dr)

retainer material
blank: standard/steel
anti-corrosion/stainless steel
G: resin

seal
blank: without seal
U: seal on one side
UU: seals on both sides

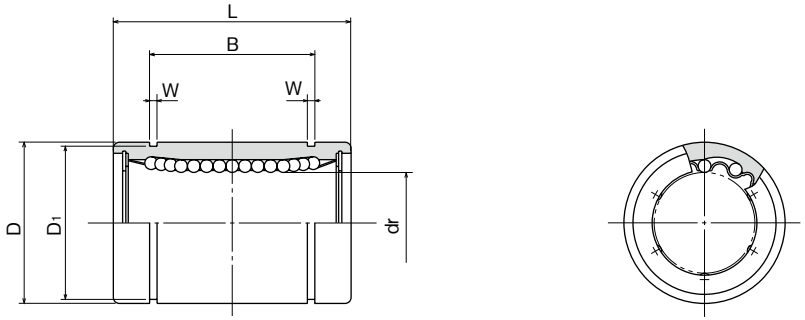

part number				number of ball circuits	major dimensions																	
standard		anti-corrosion			dr		D		L		B		W	D1	eccentricity	radial clearance (maximum)	basic load rating dynamic	basic load rating static	mass	shaft diameter
steel retainer	resin retainer	stainless retainer	resin retainer		mm	tolerance μm	mm	tolerance μm	mm	tolerance mm	mm	tolerance mm	mm	mm	μm	μm	C N	Co N	g	mm
KB 3	KB 3G	KBS 3	KBS 3G	4	3	+8 / 0	7	0 / −8	10	0 / −0.12	–	–	–	–	10	−3	69	105	1.4	3
KB 4	KB 4G	KBS 4	KBS 4G	4	4		8		12		–	–	–	–			88	127	2	4
KB 5	KB 5G	KBS 5	KBS 5G	4	5		12		22	0 / −0.2	14.5	0 / −0.2	1.1	11.5	12		206	265	11	5
KB 8	KB 8G	KBS 8	KBS 8G	4	8		16		25		16.5		1.1	15.2			265	402	22	8
KB10	KB10G	KBS10	KBS10G	4	10		19	0 / −9	29		22		1.3	18		−4	372	549	36	10
KB12	KB12G	KBS12	KBS12G	4	12		22		32		22.9		1.3	21			510	784	45	12
KB16	KB16G	KBS16	KBS16G	4	16	+9 / −1	26		36		24.9		1.3	24.9			578	892	60	16
KB20	KB20G	KBS20	KBS20G	5	20		32	0 / −11	45		31.5		1.6	30.3	15	−6	862	1,370	102	20
KB25	KB25G	KBS25	KBS25G	6	25	+11 / −1	40		58	0 / −0.3	44.1	0 / −0.3	1.85	37.5			980	1,570	235	25
KB30	KB30G	KBS30	KBS30G	6	30		47		68		52.1		1.85	44.5		−8	1,570	2,740	360	30
KB40	KB40G	KBS40	KBS40G	6	40	+13 / −2	62	0 / −13	80		60.6		2.15	59	17		2,160	4,020	770	40
KB50	KB50G	KBS50	KBS50G	6	50		75		100		77.6		2.65	72		−13	3,820	7,940	1,250	50
KB60	KB60G	KBS60	KBS60G	6	60		90	0 / −15	125	0 / −0.4	101.7	0 / −0.4	3.15	86.5	20		4,700	9,800	2,220	60
KB80	–	–	–	6	80	+16/−4	120		165		133.7		4.15	116		−20	7,350	16,000	5,140	80

1N≒0.102kgf

www.bergab.ru Берг АБ bergab@ya.ru Тел. (495)-228-06-21, факс (495) 223-3071

www.bergab.ru Берг АБ bergab@ya.ru Тел. (495)-228-06-21, факс (495) 223-3071

SW TYPE (Inch Standard)

– Standard Type –

part number structure

example **SWS 16 G R UU-P**

- specification
  SW: standard
  SWS: anti-corrosion
- size
- retainer material
  blank: standard/steel
  anti-corrosion/stainless steel
  G: resin
- self aligning
  blank: non self aligning
  R: self aligning
- seal
  blank: without seal
  U: seal on one side
  UU: seals on both sides
  *Seals are not available on SWS2 and SWS3.
- accuracy grade
  blank: high
  P: precision

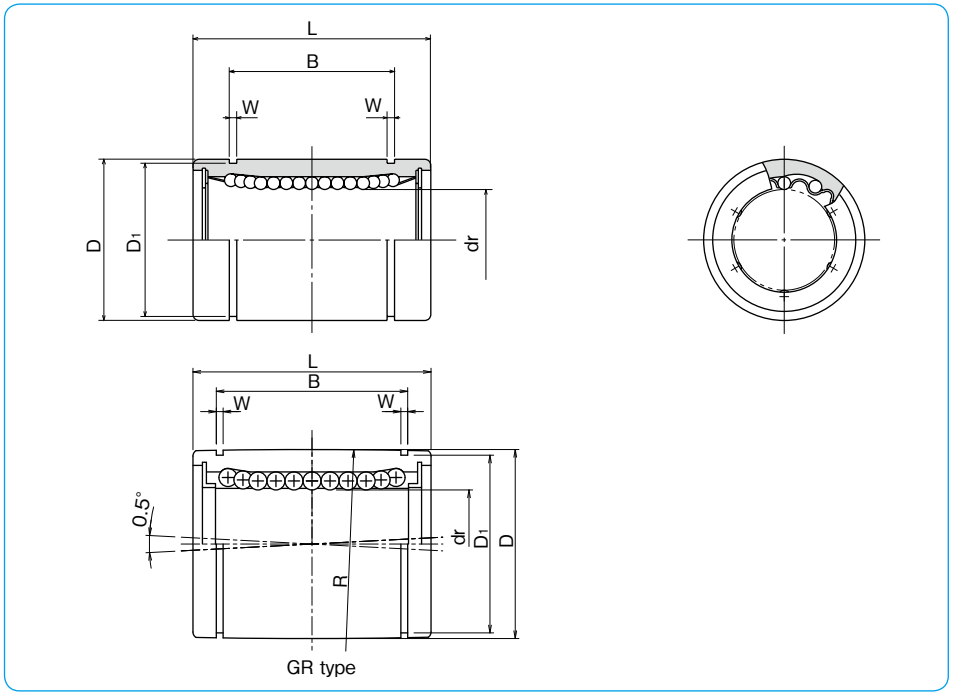

partnumber: standard steel retainer	standard resinretainer		anti-corrosion stainless retainer	anti-corrosion resin retainer	number of ball circuits	dr inch (mm)	dr tolerance inch/(μm) precision	dr tolerance inch/(μm) high	D inch (mm)	D tolerance inch/(μm)
–	–	–	SWS2	SWS2G	4	.1250 (3.175)	–	0 −.00035 (−8)	.3125 (7.938)	0 −.00040 (−9)
–	–	–	SWS3	SWS3G	4	.1875 (4.763)			.3750 (9.525)	
SW4	SW4G	SW4GR	SWS4	SWS4G	4	.2500 (6.350)	0 −.00025 (−6)	0 −.00040 (−9)	.5000 (12.700)	0 −.00045 (−11)
SW6	SW6G	SW6GR	SWS6	SWS6G	4	.3750 (9.525)			.6250 (15.875)	0 −.00050 (−13)
SW8	SW8G	SW8GR	SWS8	SWS8G	4	.5000 (12.700)			.8750 (22.225)	
SW10	SW10G	SW10GR	SWS10	SWS10G	4	.625 (15.875)			1.1250 (28.575)	
SW12	SW12G	SW12GR	SWS12	SWS12G	5	.7500 (19.050)	0 −.00030 (−7)	0 −.00040 (−10)	1.2500 (31.750)	0 −.00065 (−16)
SW16	SW16G	SW16GR	SWS16	SWS16G	6	1.0000 (25.400)			1.5625 (39.688)	
SW20	SW20G	SW20GR	SWS20	SWS20G	6	1.2500 (31.750)	0 −.00035 (−8)	0 −.00050 (−12)	2.0000 (50.800)	0 −.00075 (−19)
SW24	SW24G	SW24GR	SWS24	SWS24G	6	1.5000 (38.100)			2.3750 (60.325)	
SW32	SW32G	SW32GR	SWS32	SWS32G	6	2.0000 (50.800)			3.0000 (76.200)	0 −.00090 (−22)
SW40	–	–	–	–	6	2.5000 (63.500)	0 −.00040 (−9)	0 −.00060 (−15)	3.7500 (95.250)	
SW48	–	–	–	–	6	3.0000 (76.200)			4.50000 (114.300)	
SW64	–	–	–	–	6	4.0000 (101.600)	0 −.00040 (−10)	0 −.00080 (−20)	6.0000 (152.400)	0 −.00100 (−25)

L inch (mm)	L tolerance inch/(mm)	B inch (mm)	B tolerance inch/(mm)	W inch (mm)	D_1 inch (mm)	eccentricity precision inch/(μm)	eccentricity high inch/(μm)	radial clearance (maximum) inch/(μm)	basicloadrating dynamic C N	basicloadrating static Co N	mass g	shaft diameter inch (mm)
.5000 (12.700)	0 −.008 (−0.2)	.3681 (9.35)	0 −.008 (−0.2)	.0280 (0.710)	.2902 (7.370)	–	.0003 (8)	−.0001 (−2)	59	76	2.8	1/8 (3.175)
.5625 (14.275)		.4311 (10.95)		.0280 (0.710)	.3520 (8.940)			−.0001 (−3)	91	110	3.6	3/16 (4.763)
.7500 (19.050)		.5110 (12.98)		.0390 (0.992)	.4687 (11.906)	.0003 (8)	.0005 (12)		206	265	9.5	1/4 (6.350)
.8750 (22.225)		.6358 (16.15)		.0390 (0.992)	.5880 (14.935)				225	314	15	3/8 (9.525)
1.2500 (31.750)		.9625 (24.46)		.0459 (1.168)	.8209 (20.853)			−.0001 (−4)	510	784	42	1/2 (12.700)
1.5000 (38.100)		1.1039 (28.04)		.0559 (1.422)	1.0590 (26.899)				774	1,180	85	5/8 (15.875)
1.6250 (41.275)		1.1657 (29.61)		.0559 (1.422)	1.1760 (29.870)	.0004 (10)	.0006 (15)	−.0002 (−6)	862	1,370	104	3/4 (19.050)
2.2500 (57.150)	0 −.012 (−0.3)	1.7547 (44.57)	0 −.012 (−0.3)	.0679 (1.727)	1.4687 (37.306)				980	1,570	220	1 (25.400)
2.6250 (66.675)		2.0047 (50.92)		.0679 (1.727)	1.8859 (47.904)	.0005 (12)	.0008 (20)	−.0003 (−8)	1,570	2,740	465	1-1/4 (31.750)
3.0000 (76.200)		2.4118 (61.26)		.0859 (2.184)	2.2389 (56.870)				2,180	4,020	720	1-1/2 (38.100)
4.0000 (101.600)		3.1917 (81.07)		.1029 (2.616)	2.8379 (72.085)	.0007 (17)	.0010 (25)	−.0005 (−13)	3,820	7,940	1,310	2 (50.800)
5.0000 (127.000)		3.9760 (100.99)		.1200 (3.048)	3.5519 (90.220)				4,700	10,000	2,600	2-1/2 (63.500)
6.0000 (152.400)	0 −.016 (−0.4)	4.726 (120.04)	0 −.016 (−0.4)	.1200 (3.048)	4.3100 (109.474)			−.0008 (−20)	7,350	16,000	4,380	3 (76.200)
8.0000 (203.200)		6.258 (158.95)		.1389 (3.530)	5.745 (145.923)	.0008 (20)	.0012 (30)		14,100	34,800	10,200	4 (101.600)

1N≒0.225lbf 1kg≒2.205lbs

www.bergab.ru Берг АБ bergab@ya.ru Тел. (495)-228-06-21, факс (495) 223-3071

www.bergab.ru Берг АБ bergab@ya.ru Тел. (495)-228-06-21, факс (495) 223-3071

SM-AJ TYPE

– Clearance Adjustable Type –

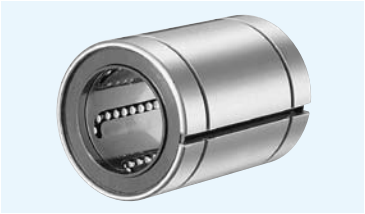

part number structure

example **SMS 25 G UU - AJ**

- **SMS**: specification — **SM**: standard; **SMS**: anti-corrosion
- **25**: inner contact diameter (dr)
- **G**: retainer material — **blank**: standard/steel; anti-corrosion/stainless steel; **G**: resin
- **UU**: seal — **blank**: without seal; **U**: seal on one side; **UU**: seals on both sides
- **AJ**: clearance-adjustable

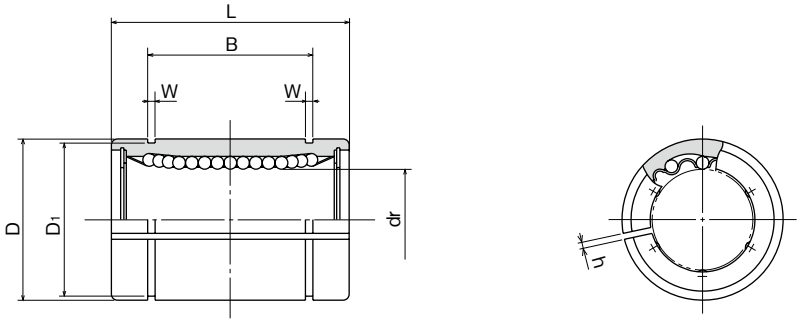

part number: standard, steel retainer	part number: standard, resin retainer	part number: anti-corrosion, stainless retainer	part number: anti-corrosion, resin retainer	number of ball circuits	dr mm	dr tolerance* μm	D mm	D tolerance* μm
–	SM 6G-AJ	–	SMS 6G-AJ	4	6	0 −9	12	0 −11
–	SM 8sG-AJ	–	SMS 8sG-AJ	4	8		15	
–	SM 8G-AJ	–	SMS 8G-AJ	4	8		15	
–	SM10G-AJ	–	SMS10G-AJ	4	10		19	0 −13
SM 12-AJ	SM12G-AJ	SMS12-AJ	SMS12G-AJ	4	12		21	
SM 13-AJ	SM13G-AJ	SMS13-AJ	SMS13G-AJ	4	13		23	
SM 16-AJ	SM16G-AJ	SMS16-AJ	SMS16G-AJ	4	16		28	
SM 20-AJ	SM20G-AJ	SMS20-AJ	SMS20G-AJ	5	20	0 −10	32	0 −16
SM 25-AJ	SM25G-AJ	SMS25-AJ	SMS25G-AJ	6	25		40	
SM 30-AJ	SM30G-AJ	SMS30-AJ	SMS30G-AJ	6	30		45	
SM 35-AJ	SM35G-AJ	SMS35-AJ	SMS35G-AJ	6	35	0 −12	52	0 −19
SM 40-AJ	SM40G-AJ	SMS40-AJ	SMS40G-AJ	6	40		60	
SM 50-AJ	SM50G-AJ	SMS50-AJ	SMS50G-AJ	6	50		80	
SM 60-AJ	SM60G-AJ	SMS60-AJ	SMS60G-AJ	6	60	0 −15	90	0 −22
SM 80-AJ	SM80G-AJ	–	–	6	80		120	
SM100-AJ	–	–	–	6	100	0 −20	150	0 −25
SM120-AJ	–	–	–	8	120		180	
SM150-AJ	–	–	–	8	150	0/−25	210	0/−29

* Accuracy is measured prior to machining clearance slit.

L mm	L tolerance mm	B mm	B tolerance mm	W mm	D1 mm	h mm	eccentricity* μm	basic load rating dynamic C N	basic load rating static Co N	mass g	shaft diameter mm
19	0 −0.2	13.5	0 −0.2	1.1	11.5	1	12	206	265	7.5	6
17		11.5		1.1	14.3	1		176	216	10	8
24		17.5		1.1	14.3	1		274	392	14.7	8
29		22		1.3	18	1		372	549	29	10
30		23		1.3	20	1.5		510	784	41	12
32		23		1.3	22	1.5		510	784	48	13
37		26.5		1.6	27	1.5		774	1,180	75	16
42		30.5		1.6	30.5	1.5	15	882	1,370	98	20
59	0 −0.3	41	0 −0.3	1.85	38	2		980	1,570	237	25
64		44.5		1.85	43	2.5		1,570	2,740	262	30
70		49.5		2.1	49	2.5	20	1,670	3,140	420	35
80		60.5		2.1	57	3		2,160	4,020	640	40
100		74		2.6	76.5	3		3,820	7,940	1,680	50
110		85		3.15	86.5	3	25	4,700	10,000	1,980	60
140	0 −0.4	105.5	0 −0.4	4.15	116	3		7,350	16,000	4,400	80
175		125.5		4.15	145	3	30	14,100	34,800	8,540	100
200		158.6		4.15	175	3		16,400	40,000	14,900	120
240		170.6		5.15	204	3	40	21,100	54,300	20,150	150

1N≒0.102kgf

www.bergab.ru Берг АБ bergab@ya.ru Тел. (495)-228-06-21, факс (495) 223-3071

www.bergab.ru Берг АБ bergab@ya.ru Тел. (495)-228-06-21, факс (495) 223-3071

KB-AJ TYPE (Euro Standard)

– Clearance Adjustable Type –

part number structure

example **KBS 25 G UU - AJ**

- **KBS**: specification
  - **KB**: standard
  - **KBS**: anti-corrosion
- **25**: inner contact diameter (dr)
- **G**: retainer material
  - **blank**: standard/steel
  - anti-corrosion/stainless steel
  - **G**: resin
- **UU**: seal
  - **blank**: without seal
  - **U**: seal on one side
  - **UU**: seals on both sides
- **AJ**: clearance-adjustable

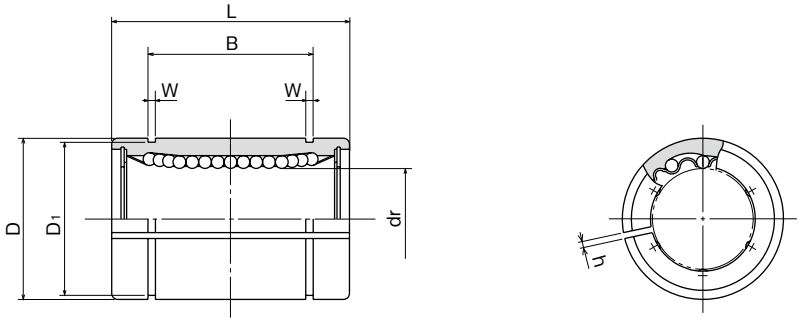

part number				number of ball circuits	major dimensions			
standard		anti-corrosion			dr		D	
steel retainer	resin retainer	stainless retainer	resin retainer		mm	tolerance* μm	mm	tolerance* μm
–	KB 5G-AJ	–	KBS 5G-AJ	4	5	+8 / 0	12	0 / −8
–	KB 8G-AJ	–	KBS 8G-AJ	4	8		16	
–	KB10G-AJ	–	KBS10G-AJ	4	10		19	0 / −9
KB12-AJ	KB12G-AJ	KBS12-AJ	KBS12G-AJ	4	12		22	
KB16-AJ	KB16G-AJ	KBS16-AJ	KBS16G-AJ	4	16	+9 / −1	26	
KB20-AJ	KB20G-AJ	KBS20-AJ	KBS20G-AJ	5	20		32	0 / −11
KB25-AJ	KB25G-AJ	KBS25-AJ	KBS25G-AJ	6	25	+11 / −1	40	
KB30-AJ	KB30G-AJ	KBS30-AJ	KBS30G-AJ	6	30		47	
KB40-AJ	KB40G-AJ	KBS40-AJ	KBS40G-AJ	6	40	+13 / −2	62	0 / −13
KB50-AJ	KB50G-AJ	KBS50-AJ	KBS50G-AJ	6	50		75	
KB60-AJ	KB60G-AJ	KBS60-AJ	KBS60G-AJ	6	60		90	0 / −15
KB80-AJ	–	–	–	6	80	+16/−4	120	

* Accuracy is measured prior to machining clearance slit.

L		B		W	D1	h	eccentricity*	basic load rating		mass	shaft diameter
								dynamic	static		
mm	tolerance mm	mm	tolerance mm	mm	mm	mm	μm	C N	Co N	g	mm
22	0 / −0.2	14.5	0 / −0.2	1.1	11.5	1	12	206	265	10	5
25		16.5		1.1	15.2	1		265	402	19.5	8
29		22		1.3	18	1		372	549	29	10
32		22.9		1.3	21	1.5		510	784	44	12
36		24.9		1.3	24.9	1.5		578	892	59	16
45		31.5		1.6	30.3	2	15	862	1,370	100	20
58	0 / −0.3	44.1	0 / −0.3	1.85	37.5	2		980	1,570	230	25
68		52.1		1.85	44.5	2		1,570	2,740	355	30
80		60.6		2.15	59	3	17	2,160	4,020	758	40
100		77.6		2.65	72	3		3,820	7,940	1,230	50
125	0 / −0.4	101.7	0 / −0.4	3.15	86.5	3	20	4,700	9,800	2,170	60
165		133.7		4.15	116	3		7,350	16,000	5,000	80

1N≒0.102kgf

www.bergab.ru Берг АБ bergab@ya.ru Тел. (495)-228-06-21, факс (495) 223-3071

www.bergab.ru Берг АБ bergab@ya.ru Тел. (495)-228-06-21, факс (495) 223-3071

SW-AJ TYPE (Inch Standard)

– Clearance Adjustable Type –

part number structure

example **SWS 16 G R UU - AJ**

- specification
  SW: standard
  SWS: anti-corrosion
- size
- retainer material
  blank: standard/steel
  anti-corrosion/stainless steel
  G: resin
- self aligning
  blank: non self aligning
  R: self aligning
- seal
  blank: without seal
  U: seal on one side
  UU: seals on both sides
- clearance-adjustable

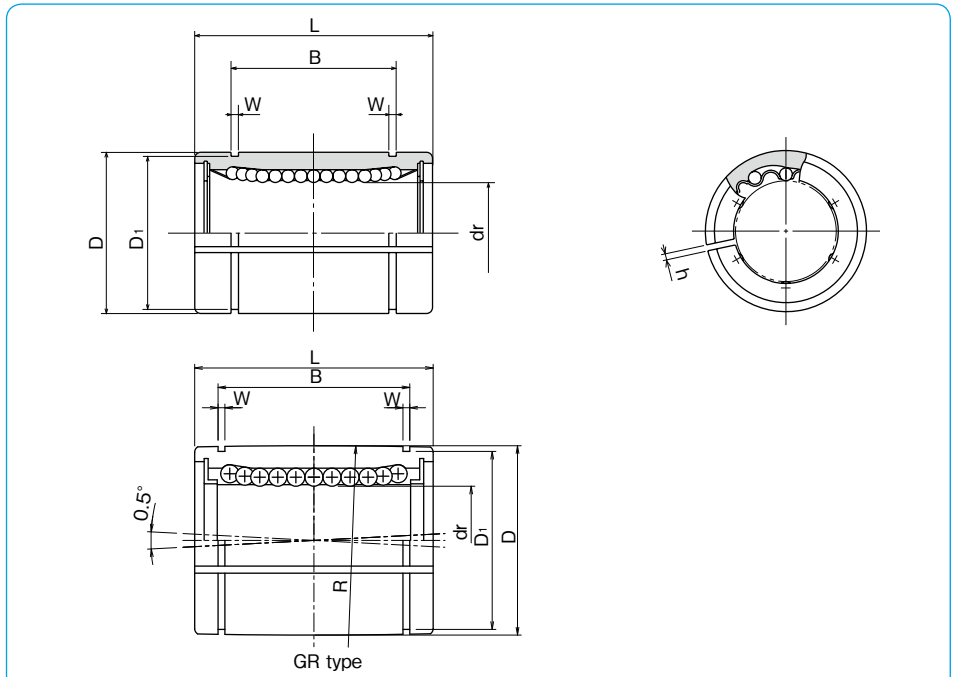

GR type

partnumber standard steelretainer	partnumber standard resinretainer		partnumber anti-corrosion stainless retainer	partnumber anti-corrosion resinretainer	number ofball circuits	majordimensions dr inch (mm)	dr tolerance* inch/(μm)	majordimensions D inch (mm)	D tolerance* inch/(μm)
–	SW4G-AJ	–	–	SWS4G-AJ	4	.2500 (6.350)	0 −.00040 (−9)	.5000 (12.700)	0 −.00045 (−11)
–	SW6G-AJ	–	–	SWS6G-AJ	4	.3750 (9.525)		.6250 (15.875)	0 −.00050 (−13)
SW8-AJ	SW8G-AJ	SW8GR-AJ	SWS8-AJ	SWS8G-AJ	4	5.000 (12.700)		.8750 (22.225)	
SW10-AJ	SW10G-AJ	SW10GR-AJ	SWS10-AJ	SWS10G-AJ	4	.625 (15.875)		1.1250 (28.575)	
SW12-AJ	SW12G-AJ	SW12GR-AJ	SWS12-AJ	SWS12G-AJ	5	.7500 (19.050)	0 −.00040 (−10)	1.2500 (31.750)	0 −.00065 (−16)
SW16-AJ	SW16G-AJ	SW16GR-AJ	SWS16-AJ	SWS16G-AJ	6	1.0000 (25.400)		1.5625 (39.688)	
SW20-AJ	SW20G-AJ	SW20GR-AJ	SWS20-AJ	SWS20G-AJ	6	1.2500 (31.750)	0 −.00050 (−12)	2.0000 (50.800)	0 −.00075 (−19)
SW24-AJ	SW24G-AJ	SW24GR-AJ	SWS24-AJ	SWS24G-AJ	6	1.5000 (38.100)		2.3750 (60.325)	
SW32-AJ	SW32G-AJ	SW32GR-AJ	SWS32-AJ	SWS32G-AJ	6	2.0000 (50.800)		3.0000 (76.200)	0 −.00090 (−22)
SW40-AJ	–	–	–	–	6	2.5000 (63.500)	0 −.00060 (−15)	3.7500 (95.250)	
SW48-AJ	–	–	–	–	6	3.0000 (76.200)		4.50000 (114.300)	
SW64-AJ	–	–	–	–	6	4.0000 (101.600)	0 −.00080 (−20)	6.0000 (152.400)	0 −.00100 (−25)

* Accuracy is measured prior to machining clearance slit.

L inch (mm)	L tolerance inch/(mm)	B inch (mm)	B tolerance inch/(mm)	W inch (mm)	D_1 inch (mm)	h inch (mm)	eccentricity* inch (μm)	basicloadrating dynamic C N	basicloadrating static Co N	mass g	shaft diameter inch (mm)
.7500 (19.050)	0 −.008 (−0.2)	.5100 (12.98)	0 −.008 (−0.2)	.0390 (0.992)	.4687 (11.906)	.04 (1)	.0005 (12)	206	265	7.5	1/4 (6.350)
.8750 (22.225)		.6358 (12.15)		.0390 (0.992)	.5880 (14.935)	.04 (1)		225	314	13.5	3/8 (9.525)
1.2500 (31.750)		.9625 (24.46)		.0459 (1.168)	.8209 (20.853)	.06 (1.5)		510	784	41	1/2 (12.700)
1.5000 (38.100)		1.1039 (28.04)		.0559 (1.422)	1.0590 (26.899)	.06 (1.5)		774	1,180	83	5/8 (15.875)
1.6250 (41.275)		1.1657 (29.61)		.0559 (1.422)	1.1760 (29.870)	.06 (1.5)	.0006 (15)	862	1,370	102	3/4 (19.050)
2.2500 (57.150)	0 −.012 (−0.3)	1.7547 (44.57)	0 −.012 (−0.3)	.0679 (1.727)	1.4687 (37.306)	.06 (1.5)		980	1,570	218	1 (25.400)
2.6250 (66.675)		2.0047 (50.92)		.0679 (1.727)	1.8859 (47.904)	.10 (2.5)	.0008 (20)	1,570	2,740	455	1-1/4 (31.750)
3.0000 (76.200)		2.4118 (61.26)		0.859 (2.184)	2.2389 (56.870)	.12 (3)		2,180	4,020	710	1-1/2 (38.100)
4.0000 (101.600)		3.1917 (81.07)		.1029 (2.616)	2.8379 (72.085)	.12 (3)	.0010 (25)	3,820	7,940	1,290	2 (50.800)
5.0000 (127.000)		3.9760 (100.99)		.1200 (3.048)	3.5519 (90.220)	.12 (3)		4,700	10,000	2,560	2-1/2 (63.500)
6.0000 (152.400)	0 −.016 (−0.4)	4.726 (120.04)	0 −.016 (−0.4)	.1200 (3.048)	4.3100 (109.474)	.12 (3)		7,350	16,000	4,350	3 (76.200)
8.0000 (203.200)		6.258 (158.95)		.1389 (3.530)	5.745 (145.923)	.12 (3)	.0012 (30)	14,100	34,800	10,150	4 (101.600)

1N≒0.225lbf 1kg≒2.205lbs

www.bergab.ru Берг АБ bergab@ya.ru Тел. (495)-228-06-21, факс (495) 223-3071

www.bergab.ru Берг АБ bergab@ya.ru Тел. (495)-228-06-21, факс (495) 223-3071

SM-OP TYPE

– Open Type –

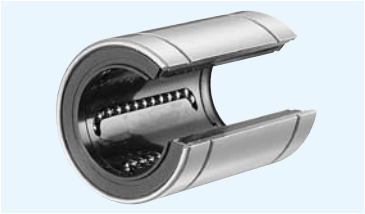

part number structure

example **SMS 25 G UU-OP**

- **SMS**: specification
  - **SM**: standard
  - **SMS**: anti-corrosion
- **25**: inner contact diameter (dr)
- **G**: retainer material
  - **blank**: standard/steel
  - anti-corrosion/stainless steel
  - **G**: resin
- **UU**: seal
  - **blank**: without seal
  - **U**: seal on one side
  - **UU**: seals on both sides
- **OP**: open type

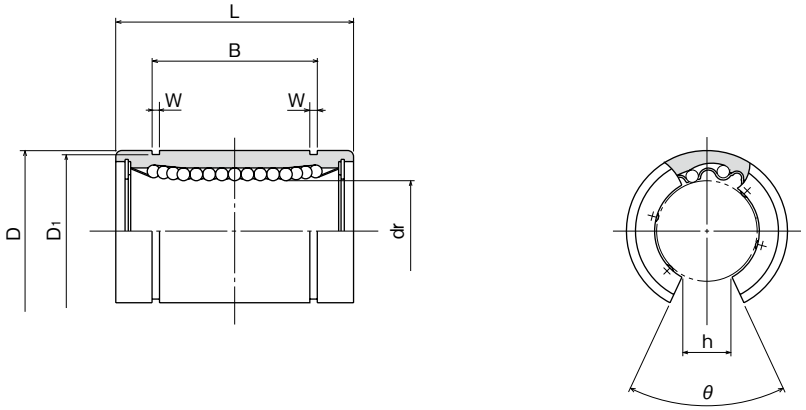

part number				number of ball circuits	major dimensions			
standard		anti-corrosion			dr		D	
steel retainer	resin retainer	stainless retainer	resin retainer		mm	tolerance* μm	mm	tolerance* μm
–	SM10G-OP	–	SMS10G-OP	3	10	0 / −9	19	0 / −13
SM 12-OP	SM12G-OP	SMS12-OP	SMS12G-OP	3	12		21	
SM 13-OP	SM13G-OP	SMS13-OP	SMS13G-OP	3	13		23	
SM 16-OP	SM16G-OP	SMS16-OP	SMS16G-OP	3	16		28	
SM 20-OP	SM20G-OP	SMS20-OP	SMS20G-OP	4	20	0 / −10	32	0 / −16
SM 25-OP	SM25G-OP	SMS25-OP	SMS25G-OP	5	25		40	
SM 30-OP	SM30G-OP	SMS30-OP	SMS30G-OP	5	30		45	
SM 35-OP	SM35G-OP	SMS35-OP	SMS35G-OP	5	35	0 / −12	52	0 / −19
SM 40-OP	SM40G-OP	SMS40-OP	SMS40G-OP	5	40		60	
SM 50-OP	SM50G-OP	SMS50-OP	SMS50G-OP	5	50		80	
SM 60-OP	SM60G-OP	SMS60-OP	SMS60G-OP	5	60	0 / −15	90	0 / −22
SM 80-OP	SM80G-OP	–	–	5	80		120	
SM100-OP	–	–	–	5	100	0 / −20	150	0 / −25
SM120-OP	–	–	–	6	120		180	
SM150-OP	–	–	–	6	150	0/−25	210	0/−29

* Accuracy is measured prior to machining open slit.

L		B		W	D1	h	θ	eccentricity*	basic load rating		mass	shaft diameter
									dynamic	static		
mm	tolerance mm	mm	tolerance mm	mm	mm	mm		μm	C N	Co N	g	mm
29	0 / −0.2	22	0 / −0.2	1.3	18	6.8	80°	12	372	549	23	10
30		23		1.3	20	8	80°		510	784	32	12
32		23		1.3	22	9	80°		510	784	37	13
37		26.5		1.6	27	11	80°		774	1,180	58	16
42		30.5		1.6	30.5	11	60°	15	882	1,370	79	20
59	0 / −0.3	41	0 / −0.3	1.85	38	12	50°		980	1,570	203	25
64		44.5		1.85	43	15	50°		1,570	2,740	228	30
70		49.5		2.1	49	17	50°	20	1,670	3,140	355	35
80		60.5		2.1	57	20	50°		2,160	4,020	546	40
100		74		2.6	76.5	25	50°		3,820	7,940	1,420	50
110		85		3.15	86.5	30	50°	25	4,700	10,000	1,650	60
140	0 / −0.4	105.5	0 / −0.4	4.15	116	40	50°		7,350	16,000	3,750	80
175		125.5		4.15	145	50	50°	30	14,100	34,800	7,200	100
200		158.6		4.15	175	85	80°		16,400	40,000	11,600	120
240		170.6		5.15	204	105	80°	40	21,100	54,300	15,700	150

1N≒0.102kgf

www.bergab.ru Берг АБ bergab@ya.ru Тел. (495)-228-06-21, факс (495) 223-3071

www.bergab.ru Берг АБ bergab@ya.ru Тел. (495)-228-06-21, факс (495) 223-3071

KB-OP TYPE (Euro Standard)

– Open Type –

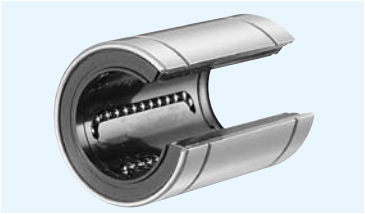

part number structure

example **KBS 25 G UU-OP**

- **KBS**: specification
  - **KB**: standard
  - **KBS**: anti-corrosion
- **25**: inner contact diameter (dr)
- **G**: retainer material
  - **blank**: standard/steel
  - anti-corrosion/stainless steel
  - **G**: resin
- **UU**: seal
  - **blank**: without seal
  - **U**: seal on one side
  - **UU**: seals on both sides
- **OP**: open type

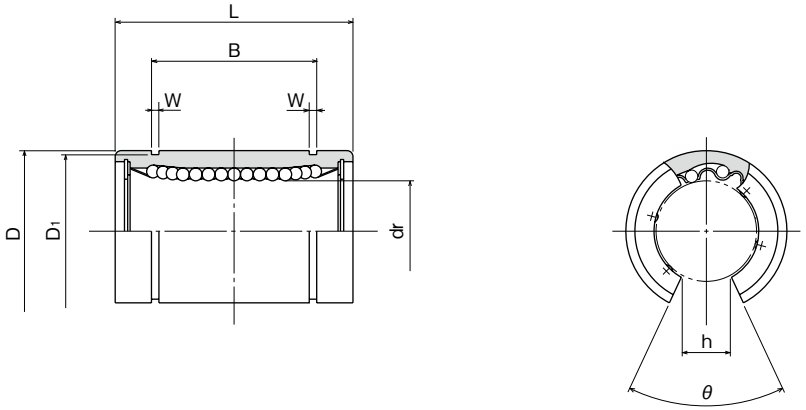

part number				number of ball circuits	major dimensions													
standard		anti-corrosion			dr		D		L		B		W	D_1	h	θ	eccentricity*	basic load rating dynamic C	basic load rating static Co	mass	shaft diameter
steel retainer	resin retainer	stainless retainer	resin retainer		mm	tolerance* μm	mm	tolerance* μm	mm	tolerance mm	mm	tolerance mm	mm	mm	mm		μm	N	N	g	mm
–	KB10G-OP	–	KBS10G-OP	3	10	+8	19	0 −9	29	0 −0.2	22	0 −0.2	1.3	18	6.8	80°	12	372	549	23	10
KB12-OP	KB12G-OP	KBS12-OP	KBS12G-OP	3	12	0	22		32		22.9		1.3	21	7.5	78°		510	784	35	12
KB16-OP	KB16G-OP	KBS16-OP	KBS16G-OP	3	16	+9 −1	26		36		24.9		1.3	24.9	10	78°		578	892	48	16
KB20-OP	KB20G-OP	KBS20-OP	KBS20G-OP	4	20		32	0 −11	45		31.5		1.6	30.3	10	60°	15	862	1,370	84	20
KB25-OP	KB25G-OP	KBS25-OP	KBS25G-OP	5	25	+11 −1	40		58	0 −0.3	44.1	0 −0.3	1.85	37.5	12.5	60°		980	1,570	195	25
KB30-OP	KB30G-OP	KBS30-OP	KBS30G-OP	5	30		47		68		52.1		1.85	44.5	12.5	50°		1,570	2,740	309	30
KB40-OP	KB40G-OP	KBS40-OP	KBS40G-OP	5	40	+13 −2	62	0 −13	80		60.6		2.15	59	16.8	50°	17	2,160	4,020	665	40
KB50-OP	KB50G-OP	KBS50-OP	KBS50G-OP	5	50		75		100		77.6		2.65	72	21	50°		3,820	7,940	1,080	50
KB60-OP	KB60G-OP	KBS60-OP	KBS60G-OP	5	60		90	0 −15	125	0 −0.4	101.7	0 −0.4	3.15	86.5	27.2	54°	20	4,700	9,800	1,900	60
KB80-OP	–	–	–	5	80	+16/−4	120		165		133.7		4.15	116	36.3	54°		7,350	16,000	4,380	80

* Accuracy is measured prior to machining open slit.

1N≒0.102kgf

www.bergab.ru Берг АБ bergab@ya.ru Тел. (495)-228-06-21, факс (495) 223-3071

www.bergab.ru Берг АБ bergab@ya.ru Тел. (495)-228-06-21, факс (495) 223-3071

SW-OP TYPE (Inch Standard)

– Open Type –

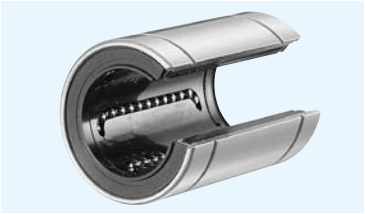

part number structure

example **SWS 16 G R UU-OP**

- specification
  SW: standard
  SWS: anti-corrosion
- size
- retainer material
  blank: standard/steel
  anti-corrosion/stainless steel
  G: resin
- self aligning
  blank: non self aligning
  R: self aligning
- seal
  blank: without seal
  U: seal on one side
  UU: seals on both sides
- open type

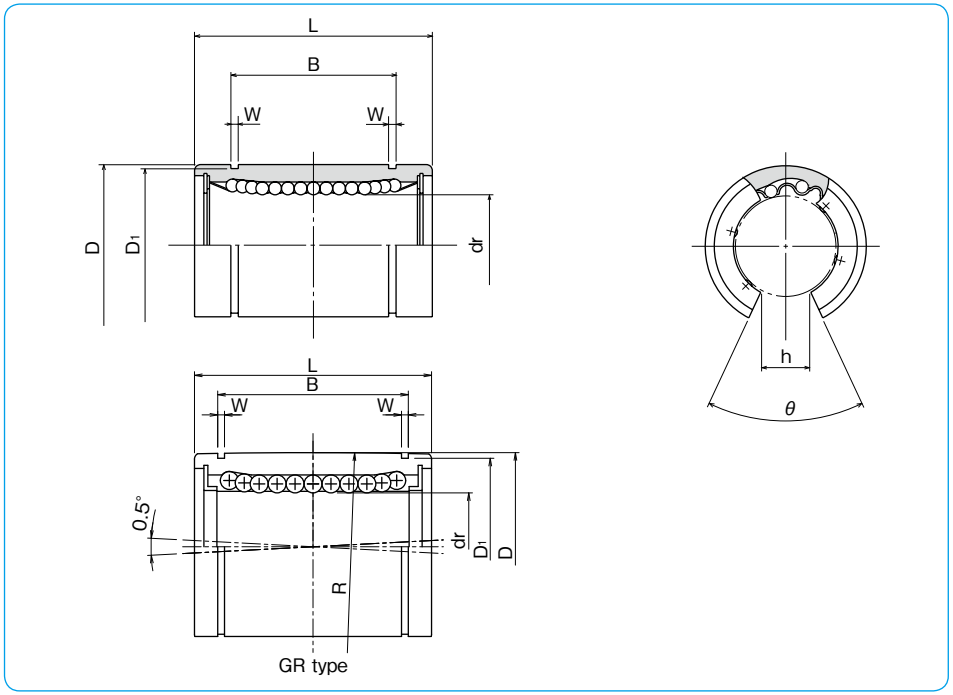

part number: standard, steel retainer	part number: standard, resin retainer		part number: anti-corrosion, steel retainer	part number: anti-corrosion, resin retainer	number of ball circuits	major dimensions: dr inch (mm)	dr tolerance* inch/(μm)	D inch (mm)	D tolerance* inch/(μm)
SW 8-OP	SW 8G-OP	SW 8GR-OP	SWS 8-OP	SWS 8G-OP	3	.5000 (12.700)	0 −.00040 (−9)	.8750 (22.225)	0 −.00050 (−13)
SW10-OP	SW10G-OP	SW10GR-OP	SWS10-OP	SWS10G-OP	3	.625 (15.875)		1.1250 (28.575)	
SW12-OP	SW12G-OP	SW12GR-OP	SWS12-OP	SWS12G-OP	4	.7500 (19.050)	0 −.00040 (−10)	1.2500 (31.750)	0 −.00065 (−16)
SW16-OP	SW16G-OP	SW16GR-OP	SWS16-OP	SWS16G-OP	5	1.0000 (25.400)		1.5625 (39.688)	
SW20-OP	SW20G-OP	SW20GR-OP	SWS20-OP	SWS20G-OP	5	1.2500 (31.750)	0 −.00050 (−12)	2.0000 (50.800)	0 −.00075 (−19)
SW24-OP	SW24G-OP	SW24GR-OP	SWS24-OP	SWS24G-OP	5	1.5000 (38.100)		2.3750 (60.325)	
SW32-OP	SW32G-OP	SW32GR-OP	SWS32-OP	SWS32G-OP	5	2.0000 (50.800)		3.0000 (76.200)	0 −.00090 (−22)
SW40-OP	–	–	–	–	5	2.5000 (63.500)	0 −.00060 (−15)	3.7500 (95.250)	
SW48-OP	–	–	–	–	5	3.0000 (76.200)		4.50000 (114.300)	
SW64-OP	–	–	–	–	5	4.0000 (101.600)	0 −.00080 (−20)	6.0000 (152.400)	0 −.00100 (−25)

* Accuracy is measured prior to machining clearance slit.

L inch (mm)	L tolerance inch/(mm)	B inch (mm)	B tolerance inch/(mm)	W inch (mm)	D_1 inch (mm)	h inch (mm)	θ	eccentricity* inch (μm)	basic load rating dynamic C N	basic load rating static Co N	mass g	shaft diameter inch (mm)
1.2500 (31.750)	0 −.008 (−0.2)	.9625 (24.46)	0 −.008 (−0.2)	.0459 (1.168)	.8209 (20.853)	.34 (7.9375)	80°	.0005 (12)	510	784	32	1/2 (12.700)
1.5000 (38.100)		1.1039 (28.04)		.0559 (1.422)	1.0590 (26.899)	.375 (9.5250)	80°		774	1,180	64	5/8 (15.875)
1.6250 (41.275)		1.1657 (29.61)		.0559 (1.422)	1.1760 (29.870)	.4375 (11.1125)	60°	.0006 (15)	862	1,370	86	3/4 (19.050)
2.2500 (57.150)	0 −.012 (−0.3)	1.7547 (44.57)	0 −.012 (−0.3)	.0679 (1.727)	1.4687 (37.306)	.5625 (14.2875)	50°		980	1,570	190	1 (25.400)
2.6250 (66.675)		2.0047 (50.92)		.0679 (1.727)	1.8859 (47.904)	.625 (15.875)	50°	.0008 (20)	1,570	2,740	390	1-1/4 (31.750)
3.0000 (76.200)		2.4118 (61.26)		0.859 (2.184)	2.2389 (56.870)	.75 (19.05)	50°		2,180	4,020	610	1-1/2 (38.100)
4.0000 (101.600)		3.1917 (81.07)		.1029 (2.616)	2.8379 (72.085)	1.0 (25.40)	50°	.0010 (25)	3,820	7,940	1,120	2 (50.800)
5.0000 (127.000)		3.9760 (100.99)		.1200 (3.048)	3.5519 (90.220)	1.25 (31.75)	50°		4,700	10,000	2,230	2-1/2 (63.500)
6.0000 (152.400)	0 −.016 (−0.4)	4.726 (120.04)	0 −.016 (−0.4)	.1200 (3.048)	4.3100 (109.474)	1.5 (38.10)	50°		7,350	16,000	3,750	3 (76.200)
8.0000 (203.200)		6.258 (158.95)		.1389 (3.530)	5.745 (145.923)	2.0 (50.80)	50°	.0012 (30)	14,100	34,800	8,740	4 (101.60)

1N≒0.225lbf 1kg≒2.205lbs

www.bergab.ru Берг АБ bergab@ya.ru Тел. (495)-228-06-21, факс (495) 223-3071

www.bergab.ru Берг АБ bergab@ya.ru Тел. (495)-228-06-21, факс (495) 223-3071

SM-G-L TYPE

— Long Type —

part number structure

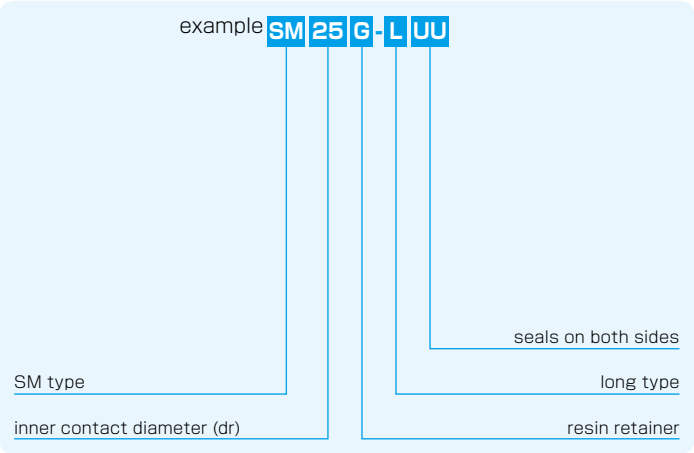

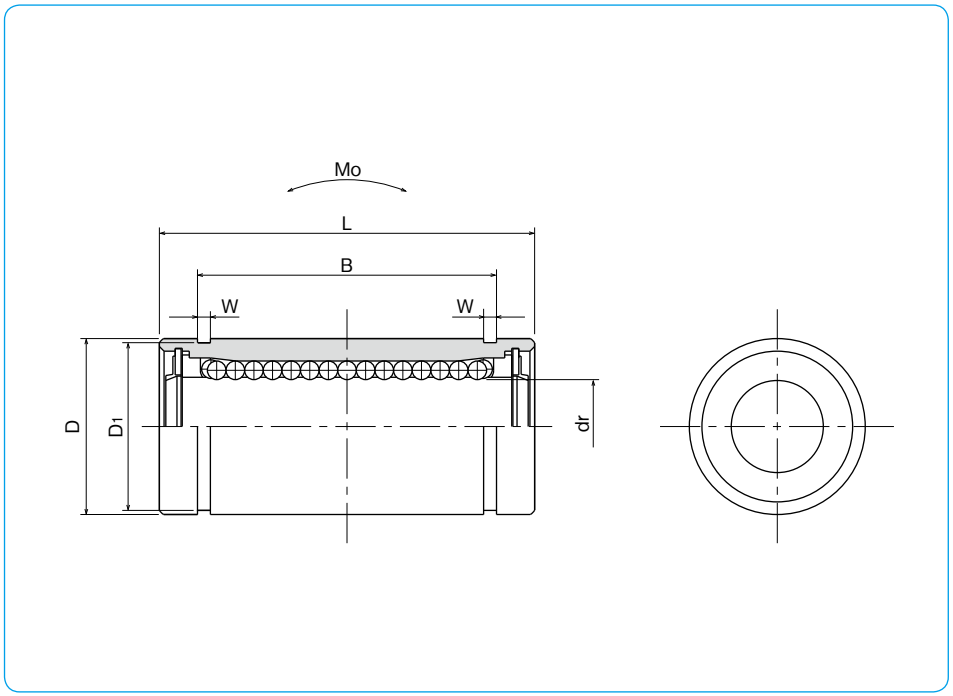

part number*	number of ball circuits	dr mm	dr tolerance μm	D mm	D tolerance μm	L mm	L tolerance mm	B mm	B tolerance mm
SM 6G-LUU	4	6	0 −10	12	0 −13	26	0 −0.3	20.5	0 −0.2
SM 8G-LUU	4	8		15		32		25.5	
SM10G-LUU	4	10		19	0 −16	39		32	
SM12G-LUU	4	12		21		41		34	
SM13G-LUU	4	13		23		45		36	
SM16G-LUU	4	16		28		53		42	
SM20G-LUU	5	20	0 −12	32	0 −19	59		47.5	
SM25G-LUU	6	25		40		83		69	0 −0.3
SM30G-LUU	6	30		45		90		75	

*UU type is standard.

major dimensions

W mm	D_1 mm	eccentricity μm	basic load rating dynamic C N	basic load rating static Co N	allowable static moment Mo N・m	mass g	shaft diameter mm
1.1	11.5	15	262	476	1.15	10	6
1.1	14.3		352	615	1.94	19	8
1.3	18		493	1,005	3.98	38	10
1.3	20		637	1,430	6.26	43	12
1.3	22		682	1,560	7.68	62	13
1.6	27		1,039	2,350	13.2	99	16
1.6	30.5	20	1,160	2,740	17.9	125	20
1.85	38		1,300	2,960	27.2	315	25
1.85	43		2,160	5,880	61.3	347	30

1N≒0.102kgf 1N・m≒0.102kgf・m

www.bergab.ru Берг АБ bergab@ya.ru Тел. (495)-228-06-21, факс (495) 223-3071

www.bergab.ru Берг АБ bergab@ya.ru Тел. (495)-228-06-21, факс (495) 223-3071

SM-W TYPE

– Double-Wide Type –

part number structure

example **SMS 25 G W UU**

- specification
  SM: standard
  SMS: anti-corrosion
- inner contact diameter (dr)
- retainer material
  blank: standard/steel
  anti-corrosion/stainless steel
  G: resin
- double-wide type
- seal
  blank: without seal
  UU: seals on both sides

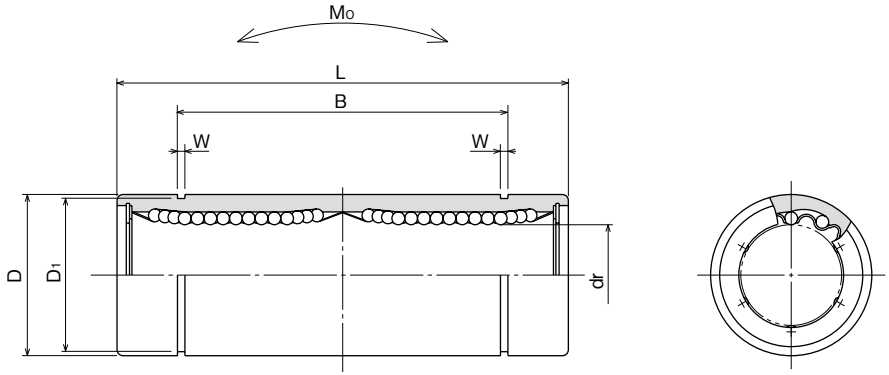

part number				number of ball circuits	major dimensions			
standard		anti-corrosion			dr		D	
steel retainer	resin retainer	stainless retainer	resin retainer		mm	tolerance μm	mm	tolerance μm
SM 3W	SM 3GW	SMS 3W	SMS 3GW	4	3	0 −10	7	0 −11
SM 4W	SM 4GW	SMS 4W	SMS 4GW	4	4		8	
SM 5W	SM 5GW	SMS 5W	SMS 5GW	4	5		10	
SM 6W	SM 6GW	SMS 6W	SMS 6GW	4	6		12	0 −13
SM 8W	SM 8GW	SMS 8W	SMS 8GW	4	8		15	
SM10W	SM10GW	SMS10W	SMS10GW	4	10		19	0 −16
SM12W	SM12GW	SMS12W	SMS12GW	4	12		21	
SM13W	SM13GW	SMS13W	SMS13GW	4	13		23	
SM16W	SM16GW	SMS16W	SMS16GW	4	16		28	
SM20W	SM20GW	SMS20W	SMS20GW	5	20	0 −12	32	0 −19
SM25W	SM25GW	SMS25W	SMS25GW	6	25		40	
SM30W	SM30GW	SMS30W	SMS30GW	6	30		45	
SM35W	SM35GW	SMS35W	SMS35GW	6	35	0 −15	52	0 −22
SM40W	SM40GW	SMS40W	SMS40GW	6	40		60	
SM50W	SM50GW	SMS50W	SMS50GW	6	50		80	
SM60W	SM60GW	SMS60W	SMS60GW	6	60	0/−20	90	0/−25

L		B		W	D1	eccentricity	basic load rating		allowable	mass	shaft diameter
							dynamic	static	static moment		
mm	tolerance mm	mm	tolerance mm	mm	mm	μm	C N	Co N	Mo N・m	g	mm
19	0 −0.3	–	–	–	–	10	138	210	0.51	3.2	3
23		–	–	–	–		176	254	0.63	4.8	4
28		20.4	0 −0.3	1.1	9.6		265	412	1.38	11	5
35		27		1.1	11.5	15	323	530	2.18	16	6
45		35		1.1	14.3		431	784	4.31	31	8
55		44		1.3	18		588	1,100	7.24	62	10
57		46		1.3	20		813	1,570	10.9	80	12
61		46		1.3	22		813	1,570	11.6	90	13
70		53		1.6	27		1,230	2,350	19.7	145	16
80		61		1.6	30.5	20	1,400	2,740	26.8	180	20
112	0 −0.4	82	0 −0.4	1.85	38		1,560	3,140	43.4	440	25
123		89		1.85	43		2,490	5,490	82.8	480	30
135		99		2.1	49	25	2,650	6,270	110	795	35
151		121		2.1	57		3,430	8,040	147	1,170	40
192		148		2.6	76.5		6,080	15,900	397	3,100	50
209		170		3.15	86.5	30	7,550	20,000	530	3,500	60

1N≒0.102kgf 1N・m≒0.102kgf・m

www.bergab.ru Берг АБ bergab@ya.ru Тел. (495)-228-06-21, факс (495) 223-3071

www.bergab.ru Берг АБ bergab@ya.ru Тел. (495)-228-06-21, факс (495) 223-3071

KB-W TYPE (Euro Standard)

– Double-Wide Type –

part number structure

example **KBS 25 G W UU**

specification
KB: standard
KBS: anti-corrosion

inner contact diameter (dr)

retainer material
blank: standard/steel
anti-corrosion/stainless steel
G: resin

double-wide type

seal
blank: without seal
UU: seals on both sides

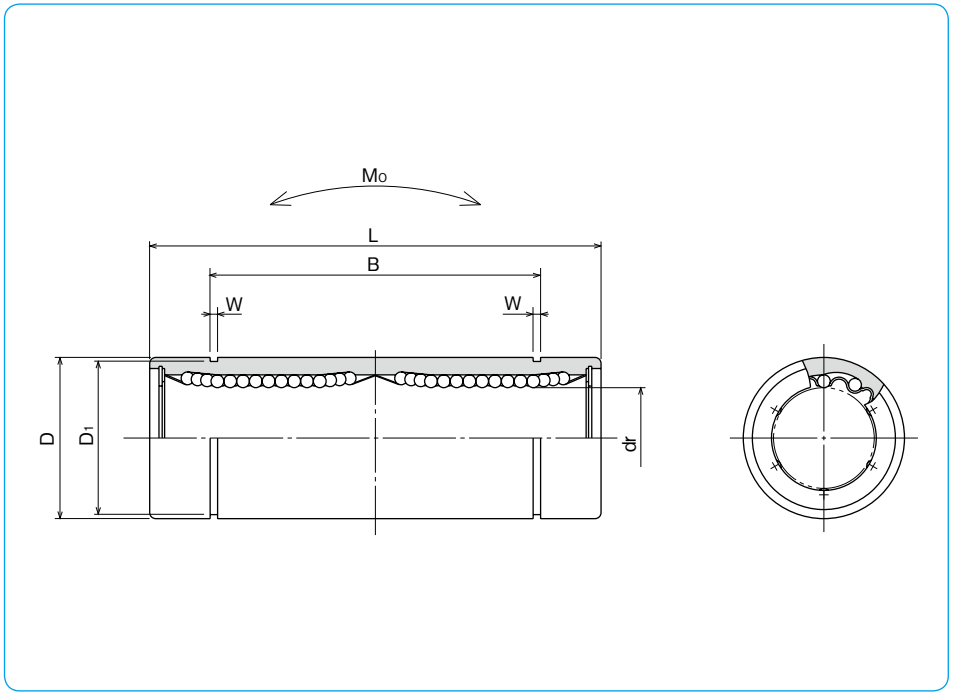

part number				number of ball circuits	major dimensions																
standard		anti-corrosion			dr		D		L		B		W	D1	eccentricity	basic load rating		allowable	mass	shaft
steel retainer	resin retainer	stainless retainer	resin retainer		mm	tolerance μm	mm	tolerance μm	mm	tolerance mm	mm	tolerance mm	mm	mm	μm	dynamic C N	static Co N	static moment Mo N・m	g	diameter mm
KB 8W	KB 8GW	KBS 8W	KBS 8GW	4	8	+9 −1	16	0/−9	46	0 −0.3	33	0 −0.3	1.1	15.2	15	421	804	4.3	40	8
KB12W	KB12GW	KBS12W	KBS12GW	4	12		22	0 −11	61		45.8		1.3	21		813	1,570	11.7	80	12
KB16W	KB16GW	KBS16W	KBS16GW	4	16	+11 −1	26		68		49.8		1.3	24.9		921	1,780	14.2	115	16
KB20W	KB20GW	KBS20W	KBS20GW	5	20		32	0 −13	80		61		1.6	30.5	17	1,370	2,740	25.0	180	20
KB25W	KB25GW	KBS25W	KBS25GW	6	25	+13 −2	40		112	0 −0.4	82	0 −0.4	1.85	38		1,570	3,140	44.0	430	25
KB30W	KB30GW	KBS30W	KBS30GW	6	30		47		123		104.2		1.85	44.5		2,500	5,490	78.9	615	30
KB40W	KB40GW	KBS40W	KBS40GW	6	40	+16 −4	62	0 −15	151		121.2		2.15	59	20	3,430	8,040	147	1,400	40
KB50W	KB50GW	KBS50W	KBS50GW	6	50		75		192		155.2		2.65	72		6,080	15,900	396	2,320	50
KB60W	KB60GW	KBS60W	KBS60GW	6	60		90	0/−20	209		170		3.15	86.5	25	7,550	20,000	487	3,920	60

1N≒0.102kgf 1N・m≒0.102kgf・m

www.bergab.ru Берг АБ bergab@ya.ru Тел. (495)-228-06-21, факс (495) 223-3071

www.bergab.ru Берг АБ bergab@ya.ru Тел. (495)-228-06-21, факс (495) 223-3071

SW-W TYPE (Inch Standard)

– Double-Wide Type –

part number structure

example **SWS 16 G W UU**

specification
SW: standard
SWS: anti-corrosion

size

retainer material
blank: standard/steel
anti-corrosion/stainless steel
G: resin

double-wide type

seal
blank: without seal
UU: seals on both sides

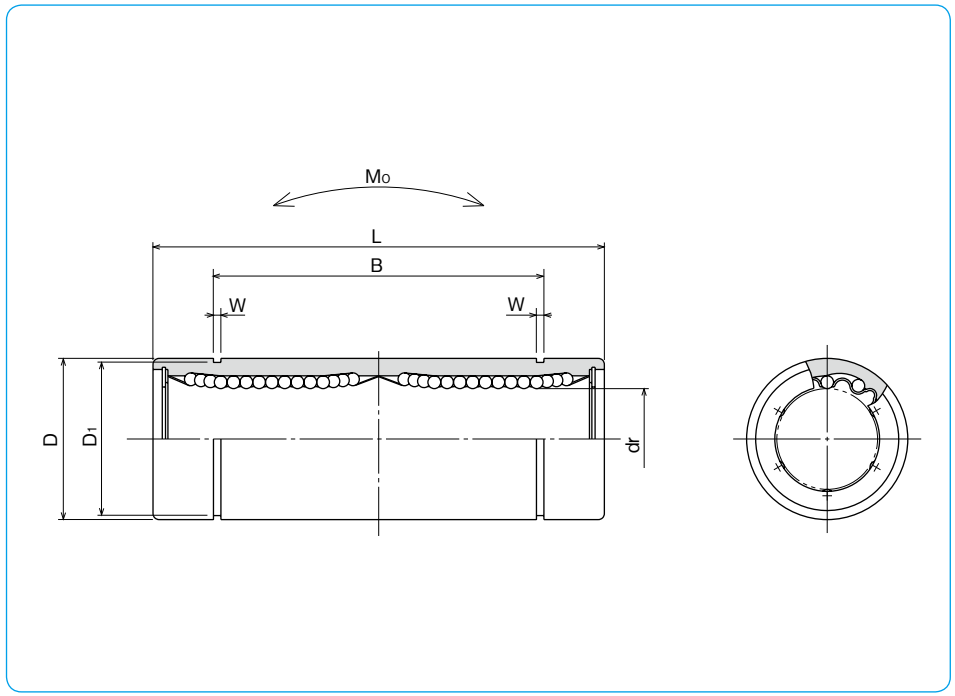

part number: standard, steel retainer	part number: standard, resin retainer	part number: anti-corrosion, stainless retainer	part number: anti-corrosion, resin retainer	number of ball circuits	dr inch (mm)	dr tolerance inch/(μm)	D inch (mm)	D tolerance inch/(μm)
SW 4W	SW 4GW	SWS 4W	SWS 4GW	4	.2500 (6.350)	0 −.00040 (−10)	.5000 (12.700)	0 −.00050 (−13)
SW 6W	SW 6GW	SWS 6W	SWS 6GW	4	.3750 (9.525)		.6250 (15.875)	0 −.00065 (−16)
SW 8W	SW 8GW	SWS 8W	SWS 8GW	4	.5000 (12.700)		.8750 (22.225)	
SW10W	SW10GW	SWS10W	SWS10GW	4	.6250 (15.875)		1.1250 (28.575)	
SW12W	SW12GW	SWS12W	SWS12GW	5	.7500 (19.050)	0 −.00050 (−12)	1.2500 (31.750)	0 −.00075 (−19)
SW16W	SW16GW	SWS16W	SWS16GW	6	1.0000 (25.400)		1.5625 (39.688)	
SW20W	SW20GW	SWS20W	SWS20GW	6	1.2500 (31.750)	0 −.00060 (−15)	2.0000 (50.800)	0 −.00090 (−22)
SW24W	SW24GW	SWS24W	SWS24GW	6	1.5000 (38.100)		2.3750 (60.325)	
SW32W	SW32GW	SWS32W	SWS32GW	6	2.0000 (50.800)		3.0000 (76.200)	0 −.00100 (−25)

L inch (mm)	L tolerance inch/(mm)	B inch (mm)	B tolerance inch/(mm)	W inch (mm)	D1 inch (mm)	eccentricity inch (μm)	basic load rating dynamic C N	basic load rating static Co N	allowable static moment Mo N・m	mass g	shaft diameter inch (mm)
1.3750 (34.925)	0 −.012 (−0.3)	1.0220 (25.959)	0 −.012 (−0.3)	.0390 (0.992)	.4687 (11.906)	.0006 (15)	323	530	2.0	17.5	1/4 (6.350)
1.5938 (40.481)		1.2716 (32.298)		.0390 (0.992)	.5880 (14.935)		353	630	2.7	28	3/8 (9.525)
2.3750 (60.325)		1.9250 (48.895)		.0459 (1.168)	.8209 (20.853)		813	1,570	11.5	80	1/2 (12.700)
2.8125 (71.438)		2.2079 (56.080)		.0559 (1.422)	1.0590 (26.899)		1,230	2,350	20.0	160	5/8 (15.875)
3.0937 (78.581)		2.3314 (59.218)		.0559 (1.422)	1.1760 (29.870)	.0008 (20)	1,370	2,740	26.5	195	3/4 (19.050)
4.2813 (108.744)	0 −.016 (−0.4)	3.5094 (89.139)	0 −.016 (−0.4)	.0679 (1.727)	1.4687 (37.306)		1,570	3,140	41.2	410	1 (25.400)
5.0000 (127.000)		4.0094 (101.839)		.0679 (1.727)	1.8859 (47.904)	.0010 (25)	2,500	5,490	84.8	820	1-1/4 (31.750)
5.6875 (144.463)		4.8236 (122.519)		.0859 (2.184)	2.2389 (56.870)		3,430	8,040	143	1,250	1-1/2 (38.100)
7.7500 (196.850)		6.3834 (162.138)		.1029 (2.616)	2.8379 (72.085)	.0012 (30)	6,080	15,900	399	2,350	2 (50.800)

1N≒0.225lbf 1N・m≒0.738lb・ft
1kg≒2.205lbs

www.bergab.ru Берг АБ bergab@ya.ru Тел. (495)-228-06-21, факс (495) 223-3071

www.bergab.ru Берг АБ bergab@ya.ru Тел. (495)-228-06-21, факс (495) 223-3071

SMF TYPE

– Round Flange Type –

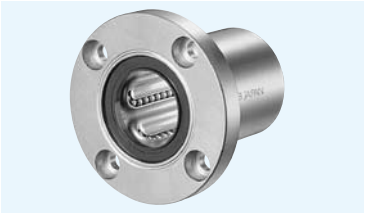

part number structure

example **SMSF 25 G UU-SK**

specification
SMF: standard
SMSF: anti-corrosion

inner contact diameter (dr)

retainer material
blank: standard/steel
anti-corrosion/stainless steel
G: resin

seal
blank: without seal
UU: seals on both sides

outer cylinder
surface treatment
blank: no surface treatment
SK: electroless nickel plating
LF: low temperature black chrome treatment with fluoride coating
SB: black oxide (not available on anti-corrosion type)
SC: industrial chrome plating

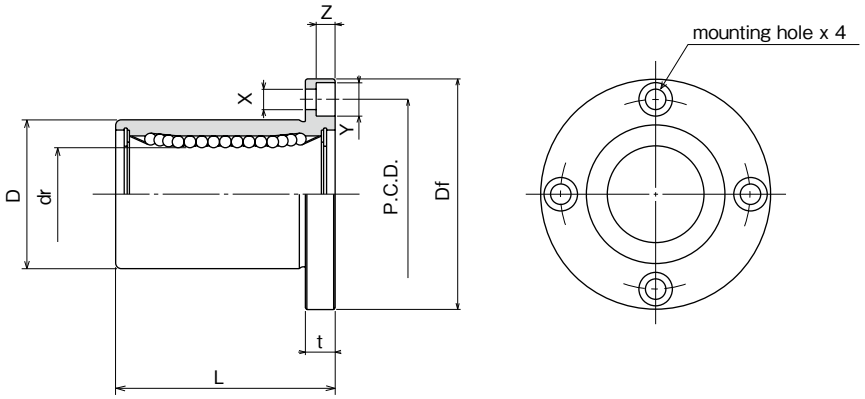

part number				number of ball circuits	major dimensions				
standard		anti-corrosion			dr		D		L
steel retainer	resin retainer	stainless retainer	resin retainer		mm	tolerance μm	mm	tolerance μm	±0.3 mm
SMF 6	SMF 6G	SMSF 6	SMSF 6G	4	6	0 −9	12	0 −13	19
SMF 8s	SMF 8sG	SMSF 8s	SMSF 8sG	4	8		15		17
SMF 8	SMF 8G	SMSF 8	SMSF 8G	4	8		15		24
SMF 10	SMF10G	SMSF10	SMSF10G	4	10		19	0 −16	29
SMF 12	SMF12G	SMSF12	SMSF12G	4	12		21		30
SMF 13	SMF13G	SMSF13	SMSF13G	4	13		23		32
SMF 16	SMF16G	SMSF16	SMSF16G	4	16		28		37
SMF 20	SMF20G	SMSF20	SMSF20G	5	20	0 −10	32	0 −19	42
SMF 25	SMF25G	SMSF25	SMSF25G	6	25		40		59
SMF 30	SMF30G	SMSF30	SMSF30G	6	30		45		64
SMF 35	SMF35G	SMSF35	SMSF35G	6	35	0 −12	52	0 −22	70
SMF 40	SMF40G	SMSF40	SMSF40G	6	40		60		80
SMF 50	SMF50G	SMSF50	SMSF50G	6	50		80		100
SMF 60	SMF60G	SMSF60	SMSF60G	6	60	0 −15	90	0 −25	110
SMF 80	–	–	–	6	80		120		140
SMF100	–	–	–	6	100	0/−20	150	0/−29	175

Df mm	t mm	flange P.C.D. mm	X×Y×Z mm	eccentricity μm	perpendicularity μm	basic load rating dynamic C N	static Co N	mass g	shaft diameter mm
28	5	20	3.5×6×3.1	12	12	206	265	24	6
32	5	24	3.5×6×3.1			176	216	32	8
32	5	24	3.5×6×3.1			274	392	37	8
40	6	29	4.5×7.5×4.1			372	549	72	10
42	6	32	4.5×7.5×4.1			510	784	76	12
43	6	33	4.5×7.5×4.1			510	784	88	13
48	6	38	4.5×7.5×4.1			774	1,180	120	16
54	8	43	5.5×9×5.1	15	15	882	1,370	180	20
62	8	51	5.5×9×5.1			980	1,570	340	25
74	10	60	6.6×11×6.1			1,570	2,740	470	30
82	10	67	6.6×11×6.1	20	20	1,670	3,140	650	35
96	13	78	9×14×8.1			2,160	4,020	1,060	40
116	13	98	9×14×8.1			3,820	7,940	2,200	50
134	18	112	11×17×11.1	25	25	4,700	10,000	3,000	60
164	18	142	11×17×11.1			7,350	16,000	5,800	80
200	20	175	14×20×13.1	30	30	14,100	34,800	10,600	100

1N≒0.102kgf

www.bergab.ru Берг АБ bergab@ya.ru Тел. (495)-228-06-21, факс (495) 223-3071

www.bergab.ru Берг АБ bergab@ya.ru Тел. (495)-228-06-21, факс (495) 223-3071

KBF TYPE (Euro Standard)

— Round Flange Type —

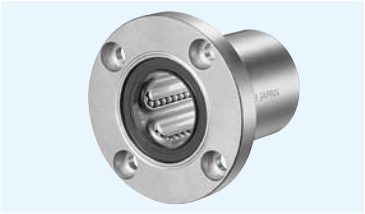

part number structure

example **KBSF 25 G UU-SK**

specification
KBF: standard
KBSF: anti-corrosion

inner contact diameter (dr)

retainer material
blank: standard/steel
anti-corrosion/stainless steel
G: resin

seal
blank: without seal
UU: seals on both sides

outer cylinder
surface treatment
blank: no surface treatment
SK: electroless nickel plating
LF: low temperature black chrome treatment with fluoride coating
SB: black oxide (not available on anti-corrosion type)
SC: industrial chrome plating

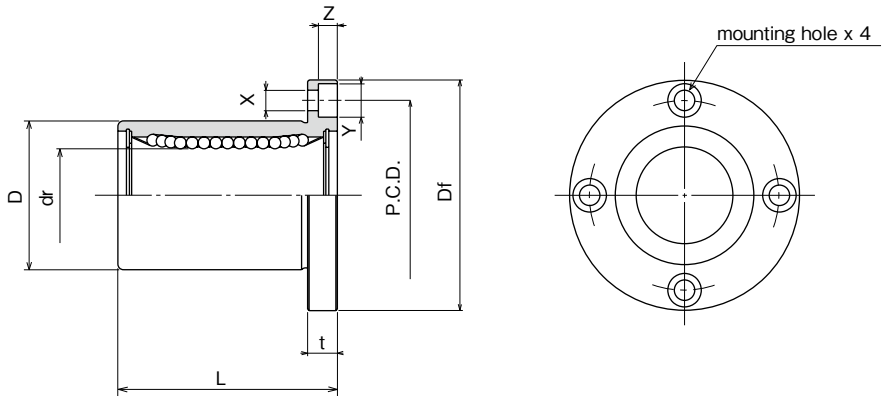

part number				number of ball circuits	major dimensions				
standard		anti-corrosion			dr		D		L
steel retainer	resin retainer	stainless retainer	resin retainer		mm	tolerance μm	mm	tolerance μm	±0.3 mm
—	KBF 5G	—	KBSF 5G	4	5	+8 / 0	12	0 / −13	22
KBF 8	KBF 8G	KBSF 8	KBSF 8G	4	8		16		25
KBF12	KBF12G	KBSF12	KBSF12G	4	12		22	0 / −16	32
KBF16	KBF16G	KBSF16	KBSF16G	4	16	+9 / −1	26		36
KBF20	KBF20G	KBSF20	KBSF20G	5	20		32	0 / −19	45
KBF25	KBF25G	KBSF25	KBSF25G	6	25	+11 / −1	40		58
KBF30	KBF30G	KBSF30	KBSF30G	6	30		47		68
KBF40	KBF40G	KBSF40	KBSF40G	6	40	+13 / −2	62	0 / −22	80
KBF50	KBF50G	KBSF50	KBSF50G	6	50		75		100
KBF60	KBF60G	KBSF60	KBSF60G	6	60		90	0 / −25	125
KBF80	—	—	—	6	80	+16/−4	120		165

Df mm	t mm	flange P.C.D. mm	X×Y×Z mm	eccentricity μm	perpendicularity μm	basic load rating dynamic C N	static Co N	mass g	shaft diameter mm
28	5	20	3.5×6×3.1	12	12	206	265	26	5
32	5	24	3.5×6×3.1			265	402	41	8
42	6	32	4.5×7.5×4.1			510	784	80	12
46	6	36	4.5×7.5×4.1			578	892	103	16
54	8	43	5.5×9×5.1	15	15	862	1,370	182	20
62	8	51	5.5×9×5.1			980	1,570	335	25
76	10	62	6.6×11×6.1			1,570	2,740	560	30
98	13	80	9×14×8.1	17	17	2,160	4,020	1,175	40
112	13	94	9×14×8.1			3,820	7,940	1,745	50
134	18	112	11×17×11.1	20	20	4,700	9,800	3,220	60
164	18	142	11×17×11.1			7,350	16,000	6,420	80

1N≒0.102kgf

www.bergab.ru Берг АБ bergab@ya.ru Тел. (495)-228-06-21, факс (495) 223-3071

www.bergab.ru Берг АБ bergab@ya.ru Тел. (495)-228-06-21, факс (495) 223-3071

SWF TYPE (Inch Standard)

— Round Flange Type —

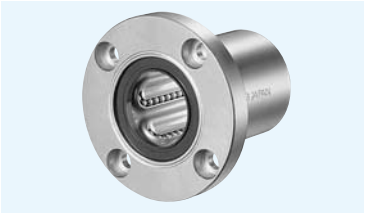

part number structure

example **SWSF 16 G UU-SK**

specification
SWF: standard
SWSF: anti-corrosion

size

retainer material
blank: standard/steel
anti-corrosion/stainless steel
G: resin

outer cylinder
surface treatment
blank: no surface treatment
SK: electroless nickel plating
LF: low temperature black chrome treatment with fluoride coating
SB: black oxide (not available on anti-corrosion type)
SC: industrial chrome plating

seal
blank: without seal
UU: seals on both sides

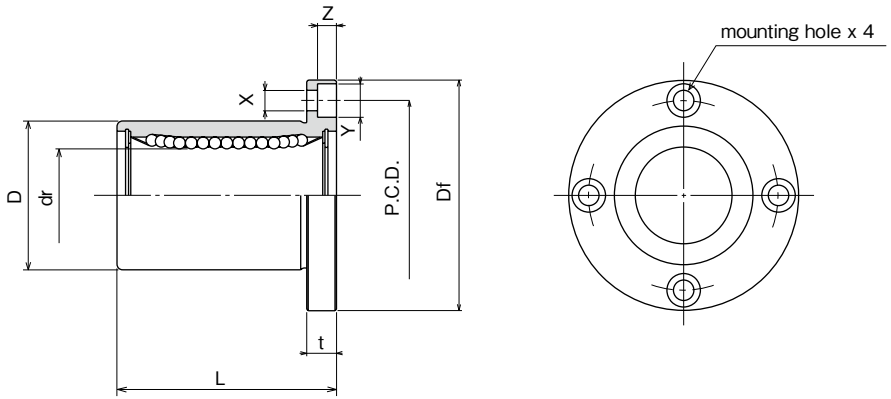

part number: standard, steel retainer	part number: standard, resin retainer	part number: anti-corrosion, stainless retainer	part number: anti-corrosion, resin retainer	number of ball circuits	dr inch (mm)	dr tolerance inch/(μm)	D inch (mm)	D tolerance inch/(μm)	L ±.012 (±0.3) inch/(mm)
SWF 4	SWF 4G	SWSF 4	SWSF 4G	4	.2500 (6.350)	0 −.00040 (−9)	.5000 (12.700)	0 −.00050 (−13)	.7500 (19.050)
SWF 6	SWF 6G	SWSF 6	SWSF 6G	4	.3750 (9.525)		.6250 (15.875)	0 −.00065 (−16)	.8750 (22.225)
SWF 8	SWF 8G	SWSF 8	SWSF 8G	4	.5000 (12.700)		.8750 (22.225)		1.2500 (31.750)
SWF10	SWF10G	SWSF10	SWSF10G	4	.6250 (15.875)		1.1250 (28.575)		1.5000 (38.100)
SWF12	SWF12G	SWSF12	SWSF12G	5	.7500 (19.050)	0 −.00040 (−10)	1.2500 (31.750)	0 −.00075 (−19)	1.6250 (41.275)
SWF16	SWF16G	SWSF16	SWSF16G	6	1.0000 (25.400)		1.5625 (39.688)		2.2500 (57.150)
SWF20	SWF20G	SWSF20	SWSF20G	6	1.2500 (31.750)	0 −.00050 (−12)	2.0000 (50.800)	0 −.00090 (−22)	2.6250 (66.675)
SWF24	SWF24G	SWSF24	SWSF24G	6	1.5000 (38.100)		2.3750 (60.325)		3.0000 (76.200)
SWF32	SWF32G	SWSF32	SWSF32G	6	2.0000 (50.800)		3.0000 (76.200)	0 −.00100 (−25)	4.0000 (101.600)
SWF40	–	–	–	6	2.5000 (63.500)	0 −.00060 (−15)	3.7500 (95.250)		5.0000 (127.000)
SWF48	–	–	–	6	3.0000 (76.200)		4.5000 (114.300)		6.0000 (152.400)
SWF64	–	–	–	6	4.0000 (101.600)	0 −.00080 (−20)	6.0000 (152.400)	0 −.00115 (−29)	8.0000 (203.200)

Df inch/(mm)	t inch/(mm)	flange P.C.D. inch/(mm)	X×Y×Z inch/(mm)	eccentricity inch (μm)	perpendicularity inch (μm)	basic load rating dynamic C N	basic load rating static Co N	mass g	shaft diameter inch (mm)
1.2500 (31.750)	0.219 (5.556)	.8750 (22.225)	.1560×.2500×.1410 (3.969×6.350×3.572)	.0005 (12)	.0005 (12)	206	265	32	1/4 (6.350)
1.5000 (38.100)	.2500 (6.350)	1.0620 (26.988)	.1875×.2970×.1720 (4.763×7.541×4.366)			225	314	47	3/8 (9.525)
1.7500 (44.450)	.2500 (6.350)	1.312 (33.338)	.1875×.2970×.1720 (4.763×7.541×4.366)			510	784	88	1/2 (12.700)
2.0000 (50.800)	.2500 (6.350)	1.5620 (39.688)	.1875×.2970×.1720 (4.763×7.541×4.366)			774	1,180	140	5/8 (15.875)
2.1875 (55.563)	.3125 (7.938)	1.7180 (43.660)	.2187×.3440×.2030 (5.556×8.731×5.159)	.0006 (15)	.0006 (15)	862	1,370	190	3/4 (19.050)
2.5000 (63.500)	.3125 (7.938)	2.0310 (51.594)	.2187×.3440×.2030 (5.556×8.731×5.159)			980	1,570	325	1 (25.400)
3.1250 (79.375)	.3750 (9.525)	2.5625 (65.088)	.2812×.4060×.2656 (7.144×10.319×6.747)	.0008 (20)	.0008 (20)	1,570	2,740	665	1-1/4 (31.750)
3.7500 (95.250)	.5000 (12.700)	3.0625 (77.788)	.3440×.5000×.3280 (8.731×12.700×8.334)			2,180	4,020	1,100	1-1/2 (38.100)
4.3750 (111.125)	.5000 (12.700)	3.6875 (93.662)	.3440×.5000×.3280 (8.731×12.700×8.334)	.0010 (25)	.0010 (25)	3,820	7,940	1,760	2 (50.800)
5.3750 (136.525)	.7500 (19.050)	4.5625 (115.887)	.4062×.6250×.3750 (10.319×15.875×9.525)			4,700	10,000	3,570	2-1/2 (63.500)
6.1250 (155.575)	.7500 (19.050)	5.3125 (134.937)	.4062×.6250×.3750 (10.319×15.875×9.525)			7,350	16,000	5,600	3 (76.200)
8.0000 (203.200)	.8750 (22.225)	7.0000 (177.800)	.5000×.7125×.5000 (12.700×18.097×12.700)	.0012 (30)	.0012 (30)	14,100	34,800	12,000	4 (101.600)

1N≒0.225lbf 1kg≒2.205lbs

www.bergab.ru Берг АБ bergab@ya.ru Тел. (495)-228-06-21, факс (495) 223-3071

www.bergab.ru Берг АБ bergab@ya.ru Тел. (495)-228-06-21, факс (495) 223-3071

SMK TYPE

– Square Flange Type –

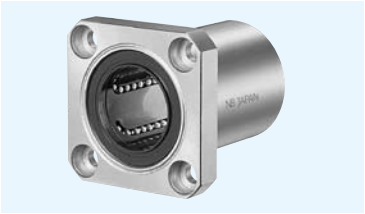

part number structure

example **SMSK 25 G UU - SK**

specification
SMK: standard
SMSK: anti-corrosion

inner contact diameter (dr)

retainer material
blank: standard/steel
anti-corrosion/stainless steel
G: resin

seal
blank: without seal
UU: seals on both sides

outer cylinder
surface treatment
blank: no surface treatment
SK: electroless nickel plating
LF: low temperature black chrome treatment with fluoride coating
SB: black oxide (not available on anti-corrosion type)
SC: industrial chrome plating

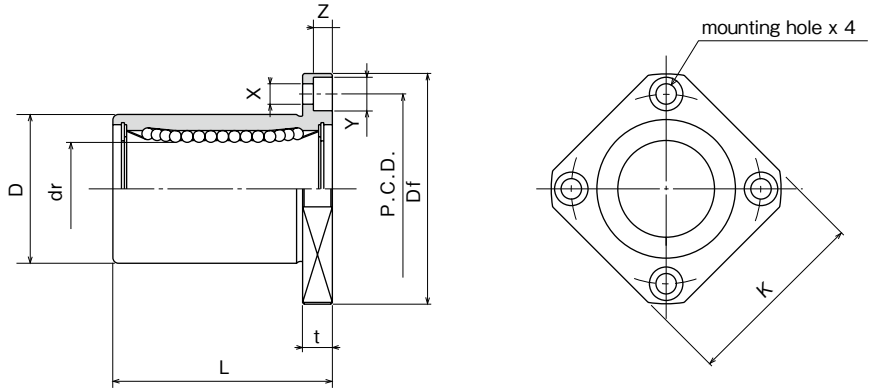

part number				number of ball circuits	major dimensions				
standard		anti-corrosion			dr		D		L
steel retainer	resin retainer	stainless retainer	resin retainer		mm	tolerance μm	mm	tolerance μm	±0.3 mm
SMK 6	SMK 6G	SMSK 6	SMSK 6G	4	6	0 −9	12	0 −13	19
SMK 8s	SMK 8sG	SMSK 8s	SMSK 8sG	4	8		15		17
SMK 8	SMK 8G	SMSK 8	SMSK 8G	4	8		15		24
SMK 10	SMK10G	SMSK10	SMSK10G	4	10		19	0 −16	29
SMK 12	SMK12G	SMSK12	SMSK12G	4	12		21		30
SMK 13	SMK13G	SMSK13	SMSK13G	4	13		23		32
SMK 16	SMK16G	SMSK16	SMSK16G	4	16		28		37
SMK 20	SMK20G	SMSK20	SMSK20G	5	20	0 −10	32	0 −19	42
SMK 25	SMK25G	SMSK25	SMSK25G	6	25		40		59
SMK 30	SMK30G	SMSK30	SMSK30G	6	30		45		64
SMK 35	SMK35G	SMSK35	SMSK35G	6	35	0 −12	52	0 −22	70
SMK 40	SMK40G	SMSK40	SMSK40G	6	40		60		80
SMK 50	SMK50G	SMSK50	SMSK50G	6	50		80		100
SMK 60	SMK60G	SMSK60	SMSK60G	6	60	0 −15	90	0 −25	110
SMK 80	–	–	–	6	80		120		140
SMK100	–	–	–	6	100	0/−20	150	0/−29	175

flange					eccentricity	perpendicularity	basic load rating		mass	shaft diameter
Df mm	K mm	t mm	P.C.D. mm	X×Y×Z mm	μm	μm	dynamic C N	static Co N	g	mm
28	22	5	20	3.5×6×3.1	12	12	206	265	18	6
32	25	5	24	3.5×6×3.1			176	216	24	8
32	25	5	24	3.5×6×3.1			274	392	29	8
40	30	6	29	4.5×7.5×4.1			372	549	52	10
42	32	6	32	4.5×7.5×4.1			510	784	57	12
43	34	6	33	4.5×7.5×4.1			510	784	72	13
48	37	6	38	4.5×7.5×4.1			774	1,180	104	16
54	42	8	43	5.5×9×5.1	15	15	882	1,370	145	20
62	50	8	51	5.5×9×5.1			980	1,570	300	25
74	58	10	60	6.6×11×6.1			1,570	2,740	375	30
82	64	10	67	6.6×11×6.1	20	20	1,670	3,140	560	35
96	75	13	78	9×14×8.1			2,160	4,020	880	40
116	92	13	98	9×14×8.1			3,820	7,940	2,000	50
134	106	18	112	11×17×11.1	25	25	4,700	10,000	2,560	60
164	136	18	142	11×17×11.1			7,350	16,000	5,300	80
200	170	20	175	14×20×13.1	30	30	14,100	34,800	9,900	100

1N≒0.102kgf

www.bergab.ru Берг АБ bergab@ya.ru Тел. (495)-228-06-21, факс (495) 223-3071

www.bergab.ru Берг АБ bergab@ya.ru Тел. (495)-228-06-21, факс (495) 223-3071

KBK TYPE (Euro Standard)

– Square Flange Type –

part number structure

example **KBSK 25 G UU-SK**

specification
KBK: standard
KBSK: anti-corrosion

inner contact diameter (dr)

retainer material
blank: standard/steel
anti-corrosion/stainless steel
G: resin

outer cylinder
surface treatment
blank: no surface treatment
SK: electroless nickel plating
LF: low temperature black chrome treatment with fluoride coating
SB: black oxide (not available on anti-corrosion type)
SC: industrial chrome plating

seal
blank: without seal
UU: seals on both sides

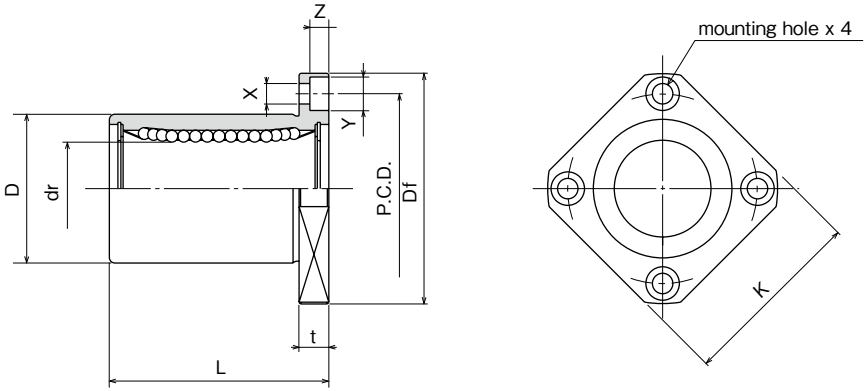

part number				number of ball circuits	major dimensions				
standard		anti-corrosion			dr		D		L
steel retainer	resin retainer	stainless retainer	resin retainer		mm	tolerance μm	mm	tolerance μm	±0.3 mm
–	KBK 5G	–	KBSK 5G	4	5	+8 / 0	12	0 / −13	22
KBK 8	KBK 8G	KBSK 8	KBSK 8G	4	8		16		25
KBK12	KBK12G	KBSK12	KBSK12G	4	12		22	0 / −16	32
KBK16	KBK16G	KBSK16	KBSK16G	4	16	+9 / −1	26		36
KBK20	KBK20G	KBSK20	KBSK20G	5	20		32	0 / −19	45
KBK25	KBK25G	KBSK25	KBSK25G	6	25	+11 / −1	40		58
KBK30	KBK30G	KBSK30	KBSK30G	6	30		47		68
KBK40	KBK40G	KBSK40	KBSK40G	6	40	+13 / −2	62	0 / −22	80
KBK50	KBK50G	KBSK50	KBSK50G	6	50		75		100
KBK60	KBK60G	KBSK60	KBSK60G	6	60		90	0 / −25	125
KBK80	–	–	–	6	80	+16/−4	120		165

flange					eccentricity	perpendicularity	basic load rating		mass	shaft diameter
Df mm	K mm	t mm	P.C.D. mm	X×Y×Z mm	μm	μm	dynamic C N	static Co N	g	mm
28	22	5	20	3.5×6×3.1	12	12	206	265	20	5
32	25	5	24	3.5×6×3.1			265	402	33	8
42	32	6	32	4.5×7.5×4.1			510	784	64	12
46	35	6	36	4.5×7.5×4.1			578	892	90	16
54	42	8	43	5.5×9×5.1	15	15	862	1,370	147	20
62	50	8	51	5.5×9×5.1			980	1,570	295	25
76	60	10	62	6.6×11×6.1			1,570	2,740	465	30
98	75	13	80	9×14×8.1	17	17	2,160	4,020	975	40
112	88	13	94	9×14×8.1			3,820	7,940	1,545	50
134	106	18	112	11×17×11.1	20	20	4,700	9,800	2,780	60
164	136	18	142	11×17×11.1			7,350	16,000	5,920	80

1N≒0.102kgf

www.bergab.ru Берг АБ bergab@ya.ru Тел. (495)-228-06-21, факс (495) 223-3071

www.bergab.ru Берг АБ bergab@ya.ru Тел. (495)-228-06-21, факс (495) 223-3071

SWK TYPE (Inch Standard)

– Square Flange Type –

part number structure

example **SWSK 16 G UU-SK**

specification
SWK: standard
SWSK: anti-corrosion

size

retainer material
blank: standard/steel
anti-corrosion/stainless steel
G: resin

outer cylinder
surface treatment
blank: no surface treatment
SK: electroless nickel plating
LF: low temperature black chrome treatment with fluoride coating
SB: black oxide (not available on anti-corrosion type)
SC: industrial chrome plating

seal
blank: without seal
UU: seals on both sides

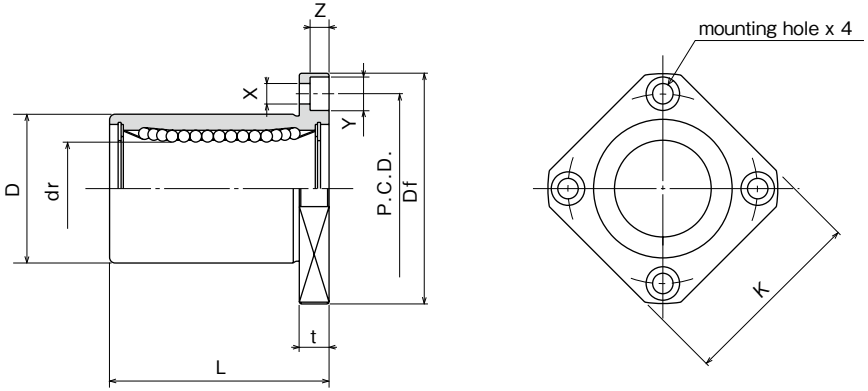

part number standard steel retainer	standard resin retainer	anti-corrosion stainless retainer	anti-corrosion resin retainer	number of ball circuits	dr inch (mm)	dr tolerance inch/(μm)	D inch (mm)	D tolerance inch/(μm)	L ±.012 (±0.3) inch/(mm)
SWK 4	SWK 4G	SWSK 4	SWSK 4G	4	.2500 (6.350)	0 −.00040 (−9)	.5000 (12.700)	0 −.00050 (−13)	.7500 (19.050)
SWK 6	SWK 6G	SWSK 6	SWSK 6G	4	.3750 (9.525)		.6250 (15.875)	0 −.00065 (−16)	.8750 (22.225)
SWK 8	SWK 8G	SWSK 8	SWSK 8G	4	.5000 (12.700)		.8750 (22.225)		1.2500 (31.750)
SWK10	SWK10G	SWSK10	SWSK10G	4	.6250 (15.875)		1.1250 (28.575)		1.5000 (38.100)
SWK12	SWK12G	SWSK12	SWSK12G	5	.7500 (19.050)	0 −.00040 (−10)	1.2500 (31.750)	0 −.00075 (−19)	1.6250 (41.275)
SWK16	SWK16G	SWSK16	SWSK16G	6	1.0000 (25.400)		1.5625 (39.688)		2.2500 (57.150)
SWK20	SWK20G	SWSK20	SWSK20G	6	1.2500 (31.750)	0 −.00050 (−12)	2.0000 (50.800)	0 −.00090 (−22)	2.6250 (66.675)
SWK24	SWK24G	SWSK24	SWSK24G	6	1.5000 (38.100)		2.3750 (60.325)		3.0000 (76.200)
SWK32	SWK32G	SWSK32	SWSK32G	6	2.0000 (50.800)		3.0000 (76.200)	0 −.00100 (−25)	4.0000 (101.600)
SWK40	–	–	–	6	2.5000 (63.500)	0 −.00060 (−15)	3.7500 (95.250)		5.0000 (127.000)
SWK48	–	–	–	6	3.0000 (76.200)		4.5000 (114.300)		6.0000 (152.400)
SWK64	–	–	–	6	4.0000 (101.600)	0 −.00080 (−20)	6.0000 (152.400)	0 −.00115 (−29)	8.0000 (203.200)

Df inch/(mm)	K inch/(mm)	t inch/(mm)	P.C.D. inch/(mm)	X×Y×Z inch/(mm)	eccentricity inch (μm)	perpendicularity inch (μm)	basic load rating dynamic C N	basic load rating static Co N	mass g	shaft diameter inch (mm)
1.2500 (31.750)	1.0000 (25.400)	0.219 (5.556)	.8750 (22.225)	.1560×.2500×.1410 (3.969×6.350×3.572)	.0005 (12)	.0005 (12)	206	265	25	1/4 (6.350)
1.5000 (38.100)	1.2500 (31.750)	.2500 (6.350)	1.0620 (26.988)	.1875×.2970×.1720 (4.763×7.541×4.366)			225	314	32	3/8 (9.525)
1.7500 (44.450)	1.3750 (34.925)	.2500 (6.350)	1.312 (33.338)	.1875×.2970×.1720 (4.763×7.541×4.366)			510	784	68	1/2 (12.700)
2.0000 (50.800)	1.5000 (38.100)	.2500 (6.350)	1.5620 (39.688)	.1875×.2970×.1720 (4.763×7.541×4.366)			774	1,180	124	5/8 (15.875)
2.1875 (55.563)	1.6875 (42.863)	.3125 (7.938)	1.7180 (43.660)	.2187×.3440×.2030 (5.556×8.731×5.159)	.0006 (15)	.0006 (15)	862	1,370	150	3/4 (19.050)
2.5000 (63.500)	2.0000 (50.800)	.3125 (7.938)	2.0310 (51.594)	.2187×.3440×.2030 (5.556×8.731×5.159)			980	1,570	280	1 (25.400)
3.1250 (79.375)	2.5000 (63.500)	.3750 (9.525)	2.5625 (65.088)	.2812×.4060×.2656 (7.144×10.319×6.747)			1,570	2,740	580	1-1/4 (31.750)
3.7500 (95.250)	3.0000 (76.200)	.5000 (12.700)	3.0625 (77.788)	.3440×.5000×.3280 (8.731×12.700×8.334)	.0008 (20)	.0008 (20)	2,180	4,020	930	1-1/2 (38.100)
4.3750 (111.125)	3.5000 (88.900)	.5000 (12.700)	3.6875 (93.662)	.3440×.5000×.3280 (8.731×12.700×8.334)			3,820	7,940	1,580	2 (50.800)
5.3750 (136.525)	4.3750 (111.125)	.7500 (19.050)	4.5625 (115.887)	.4062×.6250×.3750 (10.319×15.875×9.525)	.0010 (25)	.0010 (25)	4,700	10,000	3,200	2-1/2 (63.500)
6.1250 (155.575)	5.0000 (127.000)	.7500 (19.050)	5.3125 (134.937)	.4062×.6250×.3750 (10.319×15.875×9.525)			7,350	16,000	5,000	3 (76.200)
8.0000 (203.200)	6.7500 (171.450)	.8750 (22.225)	7.0000 (177.800)	.5000×.7125×.5000 (12.700×18.097×12.700)	.0012 (30)	.0012 (30)	14,100	34,800	11,300	4 (101.600)

1N≒0.225lbf 1kg≒2.205lbs

www.bergab.ru Берг АБ bergab@ya.ru Тел. (495)-228-06-21, факс (495) 223-3071

www.bergab.ru Берг АБ bergab@ya.ru Тел. (495)-228-06-21, факс (495) 223-3071

SMT TYPE

— Two Side Cut Flange Type —

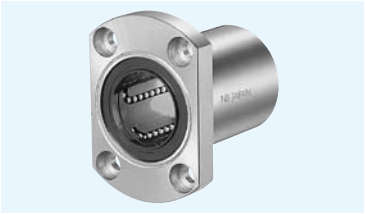

part number structure

example **SMST 25 G UU - SK**

specification
SMT: standard
SMST: anti-corrosion

inner contact diameter (dr)

retainer material
blank: standard/steel
anti-corrosion/stainless steel
G: resin

seals on both sides

outer cylinder
surface treatment
blank: no surface treatment
SK: electroless nickel plating
LF: low temperature black chrome treatment with fluoride coating
SB: black oxide (not available on anti-corrosion type)
SC: industrial chrome plating

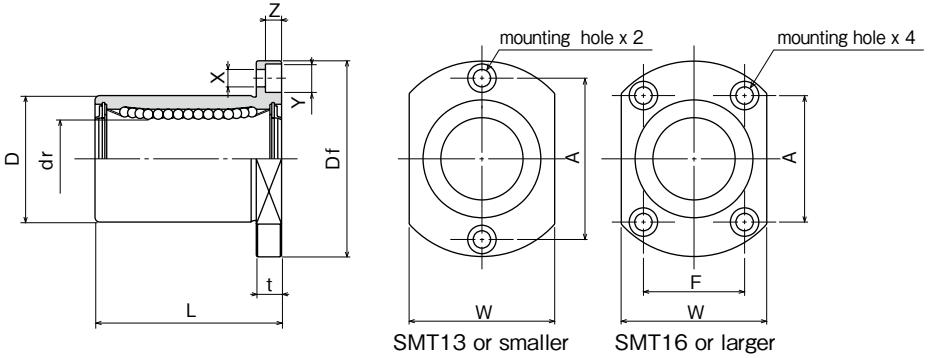

part number* standard steel retainer	standard resin retainer	anti-corrosion stainless retainer	anti-corrosion resin retainer	number of ball circuits	major dimensions dr mm	dr tolerance μm	D mm	D tolerance μm	L ±0.3 mm
SMT 6UU	SMT 6GUU	SMST 6UU	SMST 6GUU	4	6	0 −9	12	0 −13	19
SMT 8UU	SMT 8GUU	SMST 8UU	SMST 8GUU	4	8		15		24
SMT10UU	SMT10GUU	SMST10UU	SMST10GUU	4	10		19	0 −16	29
SMT12UU	SMT12GUU	SMST12UU	SMST12GUU	4	12		21		30
SMT13UU	SMT13GUU	SMST13UU	SMST13GUU	4	13		23		32
SMT16UU	SMT16GUU	SMST16UU	SMST16GUU	4	16		28		37
SMT20UU	SMT20GUU	SMST20UU	SMST20GUU	5	20	0 −10	32	0 −19	42
SMT25UU	SMT25GUU	SMST25UU	SMST25GUU	6	25		40		59
SMT30UU	SMT30GUU	SMST30UU	SMST30GUU	6	30		45		64

* UU type is standard.

flange Df mm	W mm	t mm	A mm	F mm	X×Y×Z mm	eccentricity μm	perpendicularity μm	basic load rating dynamic C N	static Co N	mass g	shaft diameter mm
28	18	5	20	—	3.5×6×3.1	12	12	206	265	21	6
32	21	5	24	—	3.5×6×3.1			274	392	33	8
40	25	6	29	—	4.5×7.5×4.1			372	549	64	10
42	27	6	32	—	4.5×7.5×4.1			510	784	68	12
43	29	6	33	—	4.5×7.5×4.1			510	784	81	13
48	34	6	31	22	4.5×7.5×4.1			774	1,180	112	16
54	38	8	36	24	5.5×9×5.1	15	15	882	1,370	167	20
62	46	8	40	32	5.5×9×5.1			980	1,570	325	25
74	51	10	49	35	6.6×11×6.1			1,570	2,740	388	30

1N≒0.102kgf

www.bergab.ru Берг АБ bergab@ya.ru Тел. (495)-228-06-21, факс (495) 223-3071

www.bergab.ru Берг АБ bergab@ya.ru Тел. (495)-228-06-21, факс (495) 223-3071

KBT TYPE (Euro Standard)

— Two Side Cut Flange Type —

part number structure

example **KBST 25 G UU-SK**

- **KBST**: specification
  - **KBT**: standard
  - **KBST**: anti-corrosion
- **25**: inner contact diameter (dr)
- **G**: retainer material
  - **blank**: standard/steel
  - anti-corrosion/stainless steel
  - **G**: resin
- **UU**: seals on both sides
- **SK**: outer cylinder surface treatment
  - **blank**: no surface treatment
  - **SK**: electroless nickel plating
  - **LF**: low temperature black chrome treatment with fluoride coating
  - **SB**: black oxide (not available on anti-corrosion type)
  - **SC**: industrial chrome plating

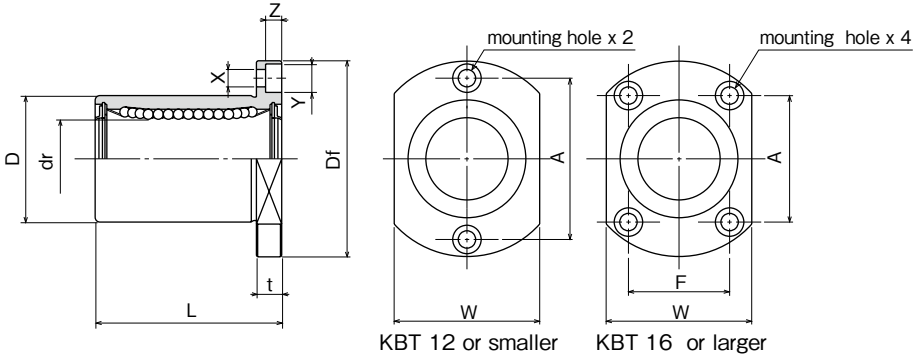

part number				number of ball circuits	major dimensions				
standard		anti-corrosion			dr		D		L
steel retainer	resin retainer	stainless retainer	resin retainer		mm	tolerance μm	mm	tolerance μm	±0.3 mm
KBT 5 UU	KBT 5G UU	KBST 5 UU	KBST 5G UU	4	5	+8 / 0	12	0 / −13	22
KBT 8 UU	KBT 8G UU	KBST 8 UU	KBST 8G UU	4	8		16		25
KBT12 UU	KBT12G UU	KBST12 UU	KBST12G UU	4	12		22	0 / −16	32
KBT16 UU	KBT16G UU	KBST16 UU	KBST16G UU	4	16	+9 / −1	26		36
KBT20 UU	KBT20G UU	KBST20 UU	KBST20G UU	5	20		32	0 / −19	45
KBT25 UU	KBT25G UU	KBST25 UU	KBST25G UU	6	25	+11 / −1	40		58
KBT30 UU	KBT30G UU	KBST30 UU	KBST30G UU	6	30		47		68

* UU type is standard.

flange						eccentricity	perpendicularity	basic load rating		mass	shaft diameter
Df	W	t	A	F	X×Y×Z			dynamic C	static Co		
mm	mm	mm	mm	mm	mm	μm	μm	N	N	g	mm
28	18	5	20	—	3.5×6×3.1	12	12	206	265	25	5
32	22	5	24	—	3.5×6×3.1			265	402	37	8
42	28	6	32	—	4.5×7.5×4.1			510	784	73	12
46	32	6	28	22	4.5×7.5×4.1			578	892	90	16
54	38	8	36	24	5.5×9×5.1	15	15	862	1,370	155	20
62	46	8	40	32	5.5×9×5.1			980	1,570	295	25
76	53	10	48	36	6.6×11×6.1			1,570	2,740	471	30

1N≒0.102kgf

www.bergab.ru Берг АБ bergab@ya.ru Тел. (495)-228-06-21, факс (495) 223-3071

www.bergab.ru Берг АБ bergab@ya.ru Тел. (495)-228-06-21, факс (495) 223-3071

SWT TYPE (Inch Standard)

— Two Side Cut Flange Type —

part number structure

example **SWST 12 G UU-SK**

- specification
  - **SWT**: standard
  - **SWST**: anti-corrosion
- size
- retainer material
  - **blank**: standard/steel
  - anti-corrosion/stainless steel
  - **G**: resin
- seals on both sides
- outer cylinder surface treatment
  - **blank**: no surface treatment
  - **SK**: electroless nickel plating
  - **LF**: low temperature black chrome treatment with fluoride coating
  - **SB**: black oxide (not available on anti-corrosion type)
  - **SC**: industrial chrome plating

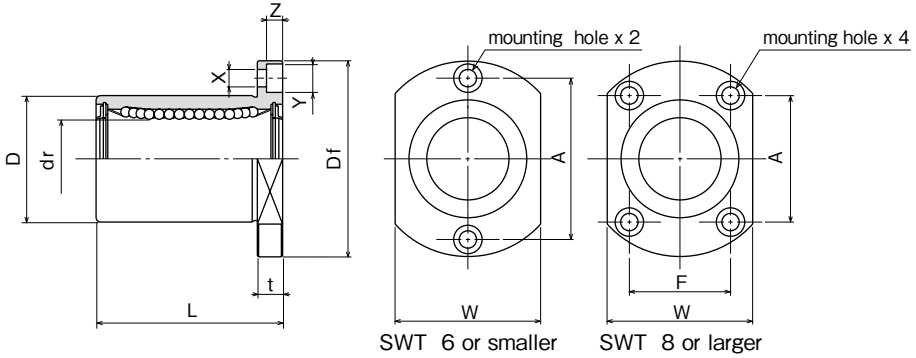

part number				number of ball circuits	major dimensions				
standard		anti-corrosion			dr		D		L
steel retainer	resin retainer	stainless retainer	resin retainer		inch (mm)	tolerance inch/(μm)	inch (mm)	tolerance inch/(μm)	±.012 (±0.3) inch/(mm)
SWT 4 UU	SWT 4G UU	SWST 4 UU	SWST 4G UU	4	.2500 (6.350)	0 −.00040 (−9)	.5000 (12.700)	0 −.00050 (−13)	.7500 (19.050)
SWT 6 UU	SWT 6G UU	SWST 6 UU	SWST 6G UU	4	.3750 (9.525)		.6250 (15.875)	0 −.00065 (−16)	.8750 (22.225)
SWT 8 UU	SWT 8G UU	SWST 8 UU	SWST 8G UU	4	.5000 (12.700)		.8750 (22.225)		1.2500 (31.750)
SWT10 UU	SWT10G UU	SWST10 UU	SWST10G UU	4	.6250 (15.875)		1.1250 (28.575)		1.5000 (38.100)
SWT12 UU	SWT12G UU	SWST12 UU	SWST12G UU	5	.7500 (19.050)	0 −.00040 (−10)	1.2500 (31.750)	0 −.00075 (−19)	1.6250 (41.275)
SWT16 UU	SWT16G UU	SWST16 UU	SWST16G UU	6	1.0000 (25.400)		1.5625 (39.688)		2.2500 (57.150)
SWT20 UU	SWT20G UU	SWST20 UU	SWST20G UU	6	1.2500 (31.750)	0 −.00050 (−12)	2.0000 (50.800)	0 −.00090 (−22)	2.6250 (66.675)

* UU type is standard.

flange						eccentricity	perpendicularity	basic load rating		mass	shaft diameter
Df inch/(mm)	W inch/(mm)	t inch/(mm)	A inch/(mm)	F inch/(mm)	X×Y×Z inch/(mm)	inch (μm)	inch (μm)	dynamic C N	static Co N	g	inch (mm)
1.2500 (31.750)	.7500 (19.050)	.2190 (5.556)	.8750 (22.225)	— —	.1560×.2500×.1410 (3.969×6.350×3.572)	.0005 (12)	.0005 (12)	206	265	28	1/4 (6.350)
1.5000 (38.100)	.8750 (22.225)	.2500 (6.350)	1.0625 (26.988)	— —	.1875×.2970×.1720 (4.763×7.541×4.366)			225	314	44	3/8 (9.525)
1.7500 (44.450)	1.1250 (28.575)	.2500 (6.350)	1.1250 (33.338)	.6875 (17.463)	.1875×.2970×.1720 (4.763×7.541×4.366)			510	784	77	1/2 (12.700)
2.0000 (50.800)	1.3750 (34.925)	.2500 (6.350)	1.2500 (31.750)	.9375 (23.813)	.1875×.2970×.1720 (4.763×7.541×4.366)			774	1,180	125	5/8 (15.875)
2.1875 (55.563)	1.5000 (38.100)	.3125 (7.938)	1.3750 (34.925)	1.0000 (25.400)	.2187×.3440×.2030 (5.556×8.731×5.159)	.0006 (15)	.0006 (15)	862	1,370	162	3/4 (19.050)
2.5000 (63.500)	1.8750 (47.625)	.3125 (7.938)	1.5625 (39.688)	1.3125 (33.338)	.2187×.3440×.2030 (5.556×8.731×5.159)			980	1,570	293	1 (25.400)
3.1250 (79.375)	2.3750 (60.325)	.3750 (9.525)	1.8750 (47.625)	1.7500 (44.450)	.2812×.4060×.2656 (7.144×10.319×6.747)	.0008 (20)	.0008 (20)	1,570	2,740	586	1-1/4 (31.750)

1N≒0.225lbf 1kg≒2.205lbs

www.bergab.ru Берг АБ bergab@ya.ru Тел. (495)-228-06-21, факс (495) 223-3071

www.bergab.ru Берг АБ bergab@ya.ru Тел. (495)-228-06-21, факс (495) 223-3071

SMF-E TYPE

– Round Flange Type with Pilot End –

part number structure

example **SMSF 25 G UU - E - SK**

- **SMSF**: specification
  - **SMF**: standard
  - **SMSF**: anti-corrosion
- **25**: inner contact diameter (dr)
- **G**: retainer material
  - **blank**: standard/steel
  - anti-corrosion/stainless steel
  - **G**: resin
- **UU**: seals on both sides
- **E**: with pilot end
- **SK**: outer cylinder surface treatment
  - **blank**: no surface treatment
  - **SK**: electroless nickel plating
  - **LF**: low temperature black chrome treatment with fluoride coating
  - **SB**: black oxide (not available on anti-corrosion type)
  - **SC**: industrial chrome plating

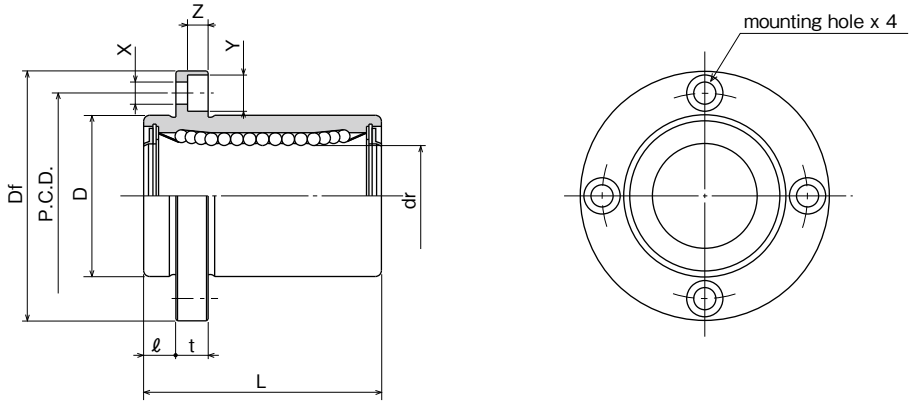

part number* standard steel retainer	standard resin retainer	anti-corrosion stainless retainer	anti-corrosion resin retainer	number of ball circuits	major dimensions dr mm	dr tolerance μm	D mm	D tolerance μm	L ±0.3 mm
SMF 6UU-E	SMF 6GUU-E	SMSF 6UU-E	SMSF 6GUU-E	4	6	0 −9	12	0 −13	19
SMF 8UU-E	SMF 8GUU-E	SMSF 8UU-E	SMSF 8GUU-E	4	8		15		24
SMF10UU-E	SMF10GUU-E	SMSF10UU-E	SMSF10GUU-E	4	10		19	0 −16	29
SMF12UU-E	SMF12GUU-E	SMSF12UU-E	SMSF12GUU-E	4	12		21		30
SMF13UU-E	SMF13GUU-E	SMSF13UU-E	SMSF13GUU-E	4	13		23		32
SMF16UU-E	SMF16GUU-E	SMSF16UU-E	SMSF16GUU-E	4	16		28		37
SMF20UU-E	SMF20GUU-E	SMSF20UU-E	SMSF20GUU-E	5	20	0 −10	32	0 −19	42
SMF25UU-E	SMF25GUU-E	SMSF25UU-E	SMSF25GUU-E	6	25		40		59
SMF30UU-E	SMF30GUU-E	SMSF30UU-E	SMSF30GUU-E	6	30		45		64
SMF35UU-E	SMF35GUU-E	–	–	6	35	0 −12	52	0 −22	70
SMF40UU-E	SMF40GUU-E	–	–	6	40		60		80
SMF50UU-E	SMF50GUU-E	–	–	6	50		80		100
SMF60UU-E	SMF60GUU-E	–	–	6	60	0/−15	90	0/−25	110

* UU type is standard.

flange ℓ mm	Df mm	t mm	P.C.D. mm	X×Y×Z mm	eccentricity μm	perpendicularity μm	basic load rating dynamic C N	static Co N	mass g	shaft diameter mm
5	28	5	20	3.5×6×3.1	12	12	206	265	24	6
5	32	5	24	3.5×6×3.1			274	392	37	8
6	40	6	29	4.5×7.5×4.1			372	549	72	10
6	42	6	32	4.5×7.5×4.1			510	784	76	12
6	43	6	33	4.5×7.5×4.1			510	784	88	13
6	48	6	38	4.5×7.5×4.1			774	1,180	120	16
8	54	8	43	5.5×9×5.1	15	15	882	1,370	180	20
8	62	8	51	5.5×9×5.1			980	1,570	340	25
10	74	10	60	6.6×11×6.1			1,570	2,740	470	30
10	82	10	67	6.6×11×6.1	20	20	1,670	3,140	650	35
13	96	13	78	9×14×8.1			2,160	4,020	1,060	40
13	116	13	98	9×14×8.1			3,820	7,940	2,200	50
18	134	18	112	11×17×11.1	25	25	4,700	10,000	3,000	60

1N≒0.102kgf

www.bergab.ru Берг АБ bergab@ya.ru Тел. (495)-228-06-21, факс (495) 223-3071

www.bergab.ru Берг АБ bergab@ya.ru Тел. (495)-228-06-21, факс (495) 223-3071

SMK-E TYPE

– Square Flange Type with Pilot End –

part number structure

example **SMSK 25 G UU - E - SK**

- SMSK: specification
  - **SMK**: standard
  - **SMSK**: anti-corrosion
- 25: inner contact diameter (dr)
- G: retainer material
  - **blank**: standard/steel
  - anti-corrosion/stainless steel
  - **G**: resin
- UU: seals on both sides
- E: with pilot end
- SK: outer cylinder surface treatment
  - **blank**: no surface treatment
  - **SK**: electroless nickel plating
  - **LF**: low temperature black chrome treatment with fluoride coating
  - **SB**: black oxide (not available on anti-corrosion type)
  - **SC**: industrial chrome plating

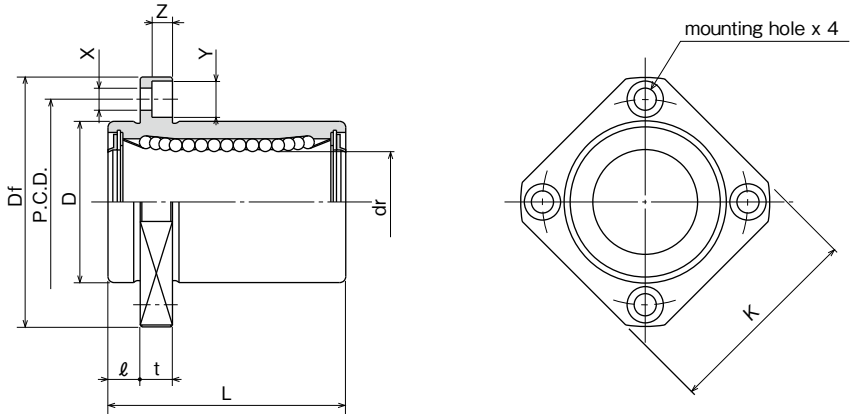

part number* standard steel retainer	standard resin retainer	anti-corrosion stainless retainer	anti-corrosion resin retainer	number of ball circuits	major dimensions dr mm	dr tolerance μm	D mm	D tolerance μm	L ±0.3 mm
SMK 6UU-E	SMK 6GUU-E	SMSK 6UU-E	SMSK 6GUU-E	4	6	0 / −9	12	0 / −13	19
SMK 8UU-E	SMK 8GUU-E	SMSK 8UU-E	SMSK 8GUU-E	4	8		15		24
SMK10UU-E	SMK10GUU-E	SMSK10UU-E	SMSK10GUU-E	4	10		19	0 / −16	29
SMK12UU-E	SMK12GUU-E	SMSK12UU-E	SMSK12GUU-E	4	12		21		30
SMK13UU-E	SMK13GUU-E	SMSK13UU-E	SMSK13GUU-E	4	13		23		32
SMK16UU-E	SMK16GUU-E	SMSK16UU-E	SMSK16GUU-E	4	16		28		37
SMK20UU-E	SMK20GUU-E	SMSK20UU-E	SMSK20GUU-E	5	20	0 / −10	32	0 / −19	42
SMK25UU-E	SMK25GUU-E	SMSK25UU-E	SMSK25GUU-E	6	25		40		59
SMK30UU-E	SMK30GUU-E	SMSK30UU-E	SMSK30GUU-E	6	30		45		64
SMK35UU-E	SMK35GUU-E	–	–	6	35	0 / −12	52	0 / −22	70
SMK40UU-E	SMK40GUU-E	–	–	6	40		60		80
SMK50UU-E	SMK50GUU-E	–	–	6	50		80		100
SMK60UU-E	SMK60GUU-E	–	–	6	60	0/−15	90	0/−25	110

* UU type is standard.

flange ℓ mm	Df mm	K mm	t mm	P.C.D. mm	X×Y×Z mm	eccentricity μm	perpendicularity μm	basic load rating dynamic C N	static Co N	mass g	shaft diameter mm
5	28	22	5	20	3.5×6×3.1	12	12	206	265	18	6
5	32	25	5	24	3.5×6×3.1			274	392	29	8
6	40	30	6	29	4.5×7.5×4.1			372	549	52	10
6	42	32	6	32	4.5×7.5×4.1			510	784	57	12
6	43	34	6	33	4.5×7.5×4.1			510	784	72	13
6	48	37	6	38	4.5×7.5×4.1			774	1,180	104	16
8	54	42	8	43	5.5×9×5.1	15	15	882	1,370	145	20
8	62	50	8	51	5.5×9×5.1			980	1,570	300	25
10	74	58	10	60	6.6×11×6.1			1,570	2,740	375	30
10	82	64	10	67	6.6×11×6.1	20	20	1,670	3,140	560	35
13	96	75	13	78	9×14×8.1			2,160	4,020	880	40
13	116	92	13	98	9×14×8.1			3,820	7,940	2,000	50
18	134	106	18	112	11×17×11.1	25	25	4,700	10,000	2,560	60

1N≒0.102kgf

www.bergab.ru Берг АБ bergab@ya.ru Тел. (495)-228-06-21, факс (495) 223-3071

www.bergab.ru Берг АБ bergab@ya.ru Тел. (495)-228-06-21, факс (495) 223-3071

SMT-E TYPE

– Two Side Cut Pilot End Flange Type –

part number structure

example **SMST 25 G UU - E - SK**

- **SMST**: specification — **SMT**: standard; **SMST**: anti-corrosion
- **25**: inner contact diameter (dr)
- **G**: retainer material — **blank**: standard/steel; anti-corrosion/stainless steel; **G**: resin
- **UU**: seals on both sides
- **E**: with pilot end
- **SK**: outer cylinder surface treatment — **blank**: no surface treatment; **SK**: electroless nickel plating; **LF**: low temperature black chrome treatment with fluoride coating; **SB**: black oxide (not available on anti-corrosion type); **SC**: industrial chrome plating

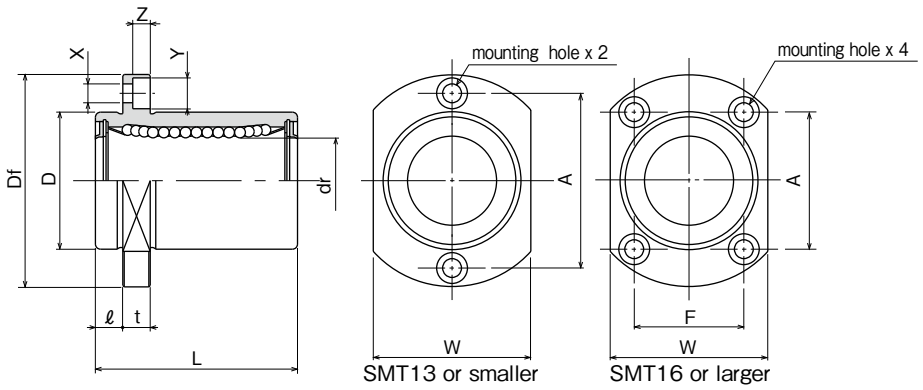

part number* standard steel retainer	standard resin retainer	anti-corrosion stainless retainer	anti-corrosion resin retainer	number of ball circuits	dr mm	dr tolerance μm	D mm	D tolerance μm	L ±0.3 mm
SMT 6UU-E	SMT 6GUU-E	SMST 6UU-E	SMST 6GUU-E	4	6	0 −9	12	0 −13	19
SMT 8UU-E	SMT 8GUU-E	SMST 8UU-E	SMST 8GUU-E	4	8		15		24
SMT10UU-E	SMT10GUU-E	SMST10UU-E	SMST10GUU-E	4	10		19	0 −16	29
SMT12UU-E	SMT12GUU-E	SMST12UU-E	SMST12GUU-E	4	12		21		30
SMT13UU-E	SMT13GUU-E	SMST13UU-E	SMST13GUU-E	4	13		23		32
SMT16UU-E	SMT16GUU-E	SMST16UU-E	SMST16GUU-E	4	16		28		37
SMT20UU-E	SMT20GUU-E	SMST20UU-E	SMST20GUU-E	5	20	0 −10	32	0 −19	42
SMT25UU-E	SMT25GUU-E	SMST25UU-E	SMST25GUU-E	6	25		40		59
SMT30UU-E	SMT30GUU-E	SMST30UU-E	SMST30GUU-E	6	30		45		64

* UU type is standard.

ℓ mm	Df mm	W mm	t mm	A mm	F mm	X×Y×Z mm	eccentricity μm	perpendicularity μm	basic load rating dynamic C N	basic load rating static Co N	mass g	shaft diameter mm
5	28	18	5	20	–	3.5×6×3.1	12	12	206	265	21	6
5	32	21	5	24	–	3.5×6×3.1			274	392	33	8
6	40	25	6	29	–	4.5×7.5×4.1			372	549	64	10
6	42	27	6	32	–	4.5×7.5×4.1			510	784	68	12
6	43	29	6	33	–	4.5×7.5×4.1			510	784	81	13
6	48	34	6	31	22	4.5×7.5×4.1			774	1,180	112	16
8	54	38	8	36	24	5.5×9×5.1	15	15	882	1,370	167	20
8	62	46	8	40	32	5.5×9×5.1			980	1,570	325	25
10	74	51	10	49	35	6.6×11×6.1			1,570	2,740	388	30

1N≒0.102kgf

www.bergab.ru Берг АБ bergab@ya.ru Тел. (495)-228-06-21, факс (495) 223-3071

www.bergab.ru Берг АБ bergab@ya.ru Тел. (495)-228-06-21, факс (495) 223-3071

SMK-G-L TYPE

— Square Flange Long type —

part number structure

example **SMK 25 G - L UU - SK**

- SMK type
- inner contact diameter (dr)
- resin retainer
- long type
- seals on both sides
- outer cylinder surface treatment
  - **blank**: no surface treatment
  - **SK**: electroless nickel plating
  - **LF**: low temperature black chrome treatment with fluoride coating
  - **SB**: black oxide (not available on anti-corrosion type)
  - **SC**: industrial chrome plating

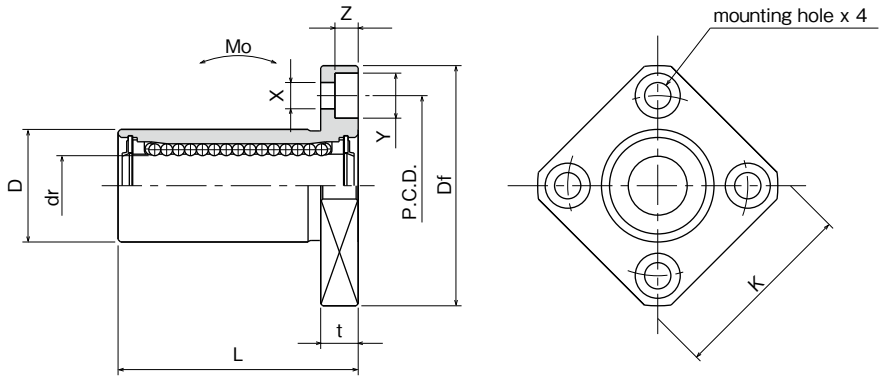

part number*	number of ball circuits	major dimensions: dr mm	dr tolerance μm	D mm	D tolerance μm	L ±0.3 mm	Df mm	K mm	flange t mm	flange P.C.D. mm
SMK 6G-LUU	4	6	0 −10	12	0 −13	26	28	22	5	20
SMK 8G-LUU	4	8		15		32	32	25	5	24
SMK10G-LUU	4	10		19	0 −16	39	40	30	6	29
SMK12G-LUU	4	12		21		41	42	32	6	32
SMK13G-LUU	4	13		23		45	43	34	6	33
SMK16G-LUU	4	16		28		53	48	37	6	38
SMK20G-LUU	5	20	0 −12	32	0 −19	59	54	42	8	43
SMK25G-LUU	6	25		40		83	62	50	8	51
SMK30G-LUU	6	30		45		90	74	58	10	60

* UU type is standard.

X×Y×Z mm	eccentricity μm	perpendicularity μm	basic load rating dynamic C N	basic load rating static Co N	allowable static moment Mo N・m	mass g	shaft diameter mm
3.5×6×3.1	15	15	262	476	1.15	20	6
3.5×6×3.1			352	615	1.94	32	8
4.5×7.5×4.1			493	1,005	3.98	59	10
4.5×7.5×4.1			637	1,430	6.26	67	12
4.5×7.5×4.1			682	1,560	7.68	88	13
4.5×7.5×4.1			1,039	2,350	13.2	125	16
5.5×9×5.1	20	20	1,160	2,740	17.9	170	20
5.5×9×5.1			1,300	2,960	27.2	380	25
6.6×11×6.1			2,160	5,880	61.3	460	30

1N≒0.102kgf 1N・m≒0.102kgf・m

www.bergab.ru Берг АБ bergab@ya.ru Тел. (495)-228-06-21, факс (495) 223-3071

www.bergab.ru Берг АБ bergab@ya.ru Тел. (495)-228-06-21, факс (495) 223-3071

SMF-W TYPE

– Round Flange Double-Wide Type –

part number structure

example **SMSF 25 G W UU - SK**

specification
SMF: standard
SMSF: anti-corrosion

inner contact diameter (dr)

retainer material
blank: standard/steel
anti-corrosion/stainless steel
G: resin

double-wide type

seal
blank: without seal
UU: seals on both sides

outer cylinder
surface treatment
blank: no surface treatment
SK: electroless nickel plating
LF: low temperature black chrome treatment with fluoride coating
SB: black oxide (not available on anti-corrosion type)
SC: industrial chrome plating

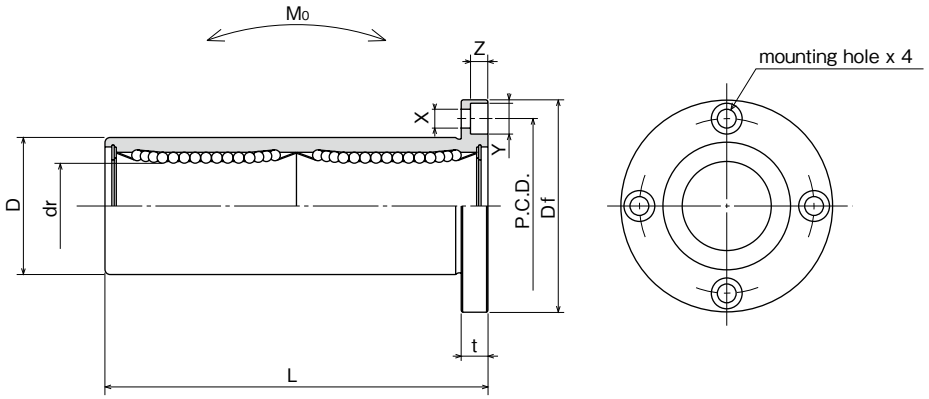

part number standard steel retainer	part number standard resin retainer	part number anti-corrosion stainless retainer	part number anti-corrosion resin retainer	number of ball circuits	major dimensions dr mm	dr tolerance μm	D mm	D tolerance μm	L ±0.3 mm
SMF 6W	SMF 6GW	SMSF 6W	SMSF 6GW	4	6	0 −10	12	0 −13	35
SMF 8W	SMF 8GW	SMSF 8W	SMSF 8GW	4	8		15		45
SMF10W	SMF10GW	SMSF10W	SMSF10GW	4	10		19	0 −16	55
SMF12W	SMF12GW	SMSF12W	SMSF12GW	4	12		21		57
SMF13W	SMF13GW	SMSF13W	SMSF13GW	4	13		23		61
SMF16W	SMF16GW	SMSF16W	SMSF16GW	4	16		28		70
SMF20W	SMF20GW	SMSF20W	SMSF20GW	5	20	0 −12	32	0 −19	80
SMF25W	SMF25GW	SMSF25W	SMSF25GW	6	25		40		112
SMF30W	SMF30GW	SMSF30W	SMSF30GW	6	30		45		123
SMF35W	SMF35GW	SMSF35W	SMSF35GW	6	35	0 −15	52	0 −22	135
SMF40W	SMF40GW	SMSF40W	SMSF40GW	6	40		60		151
SMF50W	SMF50GW	SMSF50W	SMSF50GW	6	50		80		192
SMF60W	SMF60GW	SMSF60W	SMSF60GW	6	60	0/−20	90	0/−25	209

flange Df mm	flange t mm	flange P.C.D. mm	flange X×Y×Z mm	eccentricity μm	perpendicularity μm	basic load rating dynamic C N	basic load rating static Co N	allowable static moment Mo N・m	mass g	shaft diameter mm
28	5	20	3.5×6×3.1	15	15	323	530	2.18	31	6
32	5	24	3.5×6×3.1			431	784	4.31	51	8
40	6	29	4.5×7.5×4.1			588	1,100	7.24	98	10
42	6	32	4.5×7.5×4.1			813	1,570	10.9	110	12
43	6	33	4.5×7.5×4.1			813	1,570	11.6	130	13
48	6	38	4.5×7.5×4.1			1,230	2,350	19.7	190	16
54	8	43	5.5×9×5.1	20	20	1,400	2,740	26.8	260	20
62	8	51	5.5×9×5.1			1,560	3,140	43.4	540	25
74	10	60	6.6×11×6.1			2,490	5,490	82.8	680	30
82	10	67	6.6×11×6.1	25	25	2,650	6,270	110	1,020	35
96	13	78	9×14×8.1			3,430	8,040	147	1,570	40
116	13	98	9×14×8.1			6,080	15,900	397	3,600	50
134	18	112	11×17×11.1	30	30	7,550	20,000	530	4,500	60

1N≒0.102kgf 1N・m≒0.102kgf・m

www.bergab.ru Берг АБ bergab@ya.ru Тел. (495)-228-06-21, факс (495) 223-3071

www.bergab.ru Берг АБ bergab@ya.ru Тел. (495)-228-06-21, факс (495) 223-3071

KBF-W TYPE (Euro Standard)

— Round Flange Double-Wide Type —

part number structure

example **KBSF 25 G W UU - SK**

- specification
  - **KBF**: standard
  - **KBSF**: anti-corrosion
- inner contact diameter (dr)
- retainer material
  - **blank**: standard/steel
  - anti-corrosion/stainless steel
  - **G**: resin
- double-wide type
- seal
  - **blank**: without seal
  - **UU**: seals on both sides
- outer cylinder surface treatment
  - **blank**: no surface treatment
  - **SK**: electroless nickel plating
  - **LF**: low temperature black chrome treatment with fluoride coating
  - **SB**: black oxide (not available on anti-corrosion type)
  - **SC**: industrial chrome plating

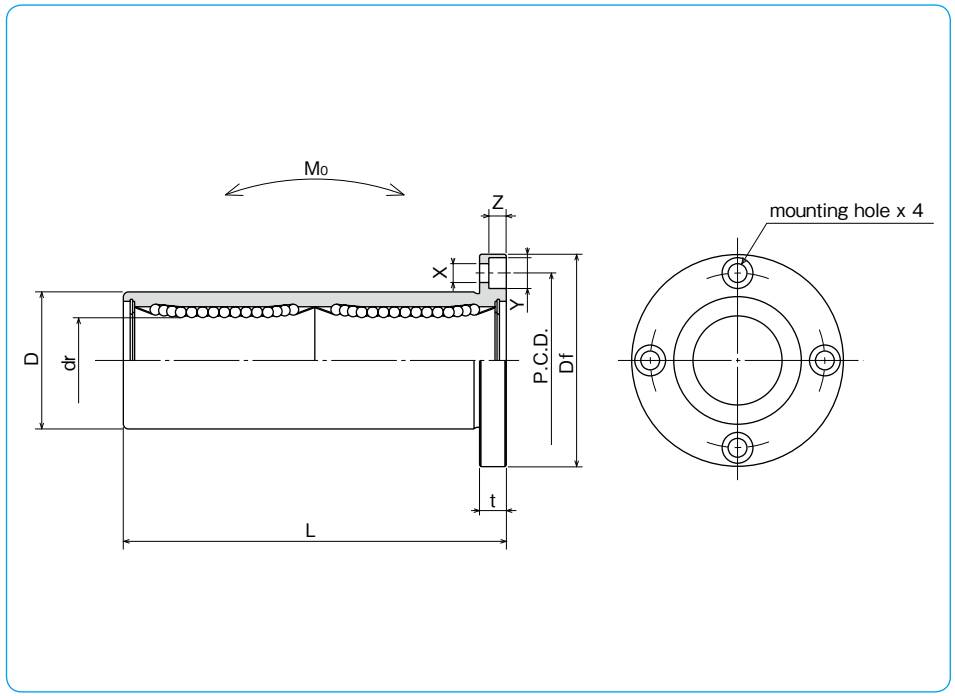

part number: standard, steel retainer	part number: standard, resin retainer	part number: anti-corrosion, stainless retainer	part number: anti-corrosion, resin retainer	number of ball circuits	major dimensions: dr mm	dr tolerance μm	D mm	D tolerance μm	L ±0.3 mm
KBF 8W	KBF 8GW	KBSF 8W	KBSF 8GW	4	8	+ 9	16	0/−13	46
KBF12W	KBF12GW	KBSF12W	KBSF12GW	4	12	− 1	22	0	61
KBF16W	KBF16GW	KBSF16W	KBSF16GW	4	16	+11	26	−16	68
KBF20W	KBF20GW	KBSF20W	KBSF20GW	5	20	− 1	32	0	80
KBF25W	KBF25GW	KBSF25W	KBSF25GW	6	25	+13	40	−19	112
KBF30W	KBF30GW	KBSF30W	KBSF30GW	6	30	− 2	47		123
KBF40W	KBF40GW	KBSF40W	KBSF40GW	6	40	+16	62	0	151
KBF50W	KBF50GW	KBSF50W	KBSF50GW	6	50	− 4	75	−22	192
KBF60W	KBF60GW	KBSF60W	KBSF60GW	6	60		90	0/−25	209

flange Df mm	t mm	P.C.D. mm	X×Y×Z mm	eccentricity μm	perpendicularity μm	basic load rating dynamic C N	static Co N	allowable static moment Mo N・m	mass g	shaft diameter mm
32	5	24	3.5×6×3.1	15	15	421	804	4.3	59	8
42	6	32	4.5×7.5×4.1			813	1,570	11.7	110	12
46	6	36	4.5×7.5×4.1			921	1,780	14.2	160	16
54	8	43	5.5×9×5.1	17	17	1,370	2,740	25.0	260	20
62	8	51	5.5×9×5.1			1,570	3,140	44.0	540	25
76	10	62	6.6×11×6.1			2,500	5,490	78.9	815	30
98	13	80	9×14×8.1	20	20	3,430	8,040	147	1,805	40
112	13	94	9×14×8.1			6,080	15,900	396	2,820	50
134	18	112	11×17×11.1	25	25	7,550	20,000	487	4,920	60

1N≒0.102kgf 1N・m≒0.102kgf・m

www.bergab.ru Берг АБ bergab@ya.ru Тел. (495)-228-06-21, факс (495) 223-3071

www.bergab.ru Берг АБ bergab@ya.ru Тел. (495)-228-06-21, факс (495) 223-3071

SWF-W TYPE (Inch Standard)

— Round Flange Double-Wide Type —

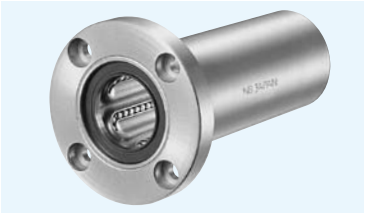

part number structure

example **SWSF 16 G W UU - SK**

- **SWSF**: specification
  - **SWF**: standard
  - **SWSF**: anti-corrosion
- **16**: size
- **G**: retainer material
  - **blank**: standard/steel
  - anti-corrosion/stainless steel
  - **G**: resin
- **W**: double-wide type
- **UU**: seal
  - **blank**: without seal
  - **UU**: seals on both sides
- **SK**: outer cylinder surface treatment
  - **blank**: no surface treatment
  - **SK**: electroless nickel plating
  - **LF**: low temperature black chrome treatment with fluoride coating
  - **SB**: black oxide (not available on anti-corrosion type)
  - **SC**: industrial chrome plating

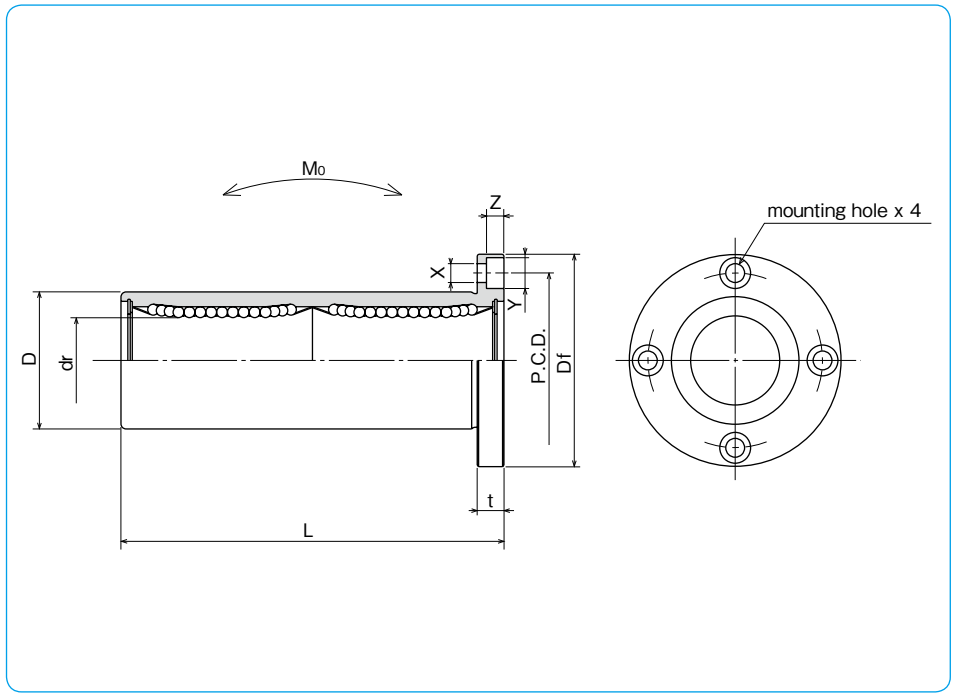

part number: standard, steel retainer	part number: standard, resin retainer	part number: anti-corrosion, stainless retainer	part number: anti-corrosion, resin retainer	number of ball circuits	dr inch (mm)	dr tolerance inch/(μm)	D inch (mm)	D tolerance inch/(μm)	L ±.012 (±0.3) inch/(mm)
SWF 4W	SWF 4GW	SWSF 4W	SWSF 4GW	4	.2500 (6.350)	0 −.00040 (−10)	.5000 (12.700)	0 −.00050 (−13)	1.3750 (34.925)
SWF 6W	SWF 6GW	SWSF 6W	SWSF 6GW	4	.3750 (9.525)		.6250 (15.875)	0 −.00065 (−16)	1.5938 (40.481)
SWF 8W	SWF 8GW	SWSF 8W	SWSF 8GW	4	.5000 (12.700)		.8750 (22.225)		2.3750 (60.325)
SWF10W	SWF10GW	SWSF10W	SWSF10GW	4	.6250 (15.875)		1.1250 (28.575)		2.8125 (71.438)
SWF12W	SWF12GW	SWSF12W	SWSF12GW	5	.7500 (19.050)	0 −.00050 (−12)	1.2500 (31.750)	0 −.00075 (−19)	3.0937 (78.581)
SWF16W	SWF16GW	SWSF16W	SWSF16GW	6	1.0000 (25.400)		1.5625 (39.688)		4.2813 (108.744)
SWF20W	SWF20GW	SWSF20W	SWSF20GW	6	1.2500 (31.750)	0 −.00060 (−15)	2.0000 (50.800)	0 −.00090 (−22)	5.0000 (127.000)
SWF24W	SWF24GW	SWSF24W	SWSF24GW	6	1.5000 (38.100)		2.3750 (60.325)		5.6875 (144.463)
SWF32W	SWF32GW	SWSF32W	SWSF32GW	6	2.0000 (50.800)		3.0000 (76.200)	0 −.00100 (−25)	7.7500 (196.850)

Df inch/(mm)	t inch/(mm)	P.C.D. inch/(mm)	X×Y×Z inch/(mm)	eccentricity inch (μm)	perpendicularity inch (μm)	basic load rating dynamic C N	basic load rating static Co N	allowable static moment Mo N・m	mass g	shaft diameter inch (mm)
1.2500 (31.750)	.2188 (5.556)	.8750 (22.225)	.1563×.2500×.1406 (3.969×6.350×3.572)	.0006 (15)	.0006 (15)	323	530	2.0	40	1/4 (6.350)
1.5000 (38.100)	.2500 (6.350)	1.0625 (26.988)	.1875×.2969×.1719 (4.763×7.541×4.366)			353	630	2.7	60	3/8 (9.525)
1.7500 (44.450)	.2500 (6.350)	1.3125 (33.338)	.1875×.2969×.1719 (4.763×7.541×4.366)			813	1,570	11.5	126	1/2 (12.700)
2.0000 (50.800)	.2500 (6.350)	1.5625 (39.688)	.1875×.2969×.1719 (4.763×7.541×4.366)			1,230	2,350	20.0	215	5/8 (15.875)
2.1875 (55.563)	.3125 (7.938)	1.7188 (43.656)	.2188×.3438×.2031 (5.556×8.731×5.159)	.0008 (20)	.0008 (20)	1,370	2,740	26.5	280	3/4 (19.050)
2.5000 (63.500)	.3125 (7.938)	2.0313 (51.594)	.2188×.3438×.2031 (5.556×8.731×5.159)			1,570	3,140	41.2	515	1 (25.400)
3.1250 (79.375)	.3750 (9.525)	2.5625 (65.088)	.2813×.4063×.2656 (7.144×10.319×6.747)	.0010 (25)	.0010 (25)	2,500	5,490	84.8	1,020	1-1/4 (31.750)
3.7500 (95.250)	.5000 (12.700)	3.0625 (77.788)	.3437×.5000×.3281 (8.731×12.700×8.334)			3,430	8,040	143	1,630	1-1/2 (38.100)
4.3750 (111.125)	.5000 (12.700)	3.6875 (93.662)	.3437×.5000×.3281 (8.731×12.700×8.334)	.0012 (30)	.0012 (30)	6,080	15,900	399	2,800	2 (50.800)

1N≒0.225lbf 1N・m≒0.738lb・ft
1kg≒2.205lbs

www.bergab.ru Берг АБ bergab@ya.ru Тел. (495)-228-06-21, факс (495) 223-3071

www.bergab.ru Берг АБ bergab@ya.ru Тел. (495)-228-06-21, факс (495) 223-3071

SMK-W TYPE

– Square Flange Double-Wide Type –

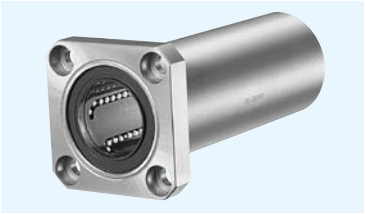

part number structure

example **SMSK 25 G W UU - SK**

specification
SMK: standard
SMSK: anti-corrosion

inner contact diameter (dr)

retainer material
blank: standard/steel
anti-corrosion/stainless steel
G: resin

double-wide type

seal
blank: without seal
UU: seals on both sides

outer cylinder
surface treatment
blank: no surface treatment
SK: electroless nickel plating
LF: low temperature black chrome treatment with fluoride coating
SB: black oxide (not available on anti-corrosion type)
SC: industrial chrome plating

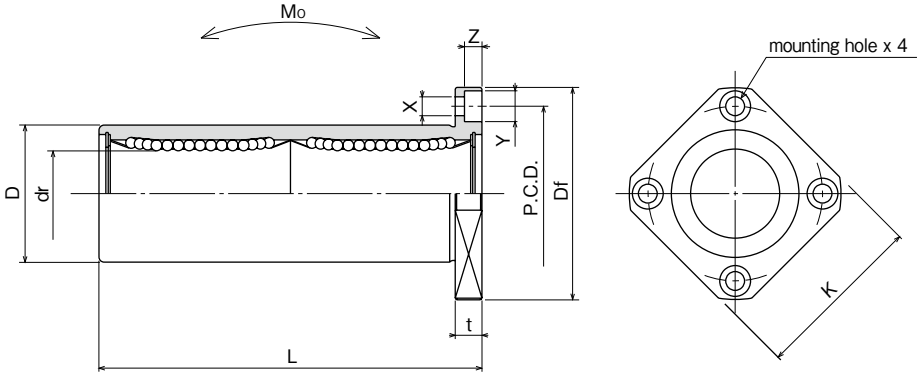

part number				number of ball circuits	major dimensions				
standard		anti-corrosion			dr		D		L
steel retainer	resin retainer	stainless retainer	resin retainer		mm	tolerance μm	mm	tolerance μm	±0.3 mm
SMK 6W	SMK 6GW	SMSK 6W	SMSK 6GW	4	6	0 −10	12	0 −13	35
SMK 8W	SMK 8GW	SMSK 8W	SMSK 8GW	4	8		15		45
SMK10W	SMK10GW	SMSK10W	SMSK10GW	4	10		19	0 −16	55
SMK12W	SMK12GW	SMSK12W	SMSK12GW	4	12		21		57
SMK13W	SMK13GW	SMSK13W	SMSK13GW	4	13		23		61
SMK16W	SMK16GW	SMSK16W	SMSK16GW	4	16		28		70
SMK20W	SMK20GW	SMSK20W	SMSK20GW	5	20	0 −12	32	0 −19	80
SMK25W	SMK25GW	SMSK25W	SMSK25GW	6	25		40		112
SMK30W	SMK30GW	SMSK30W	SMSK30GW	6	30		45		123
SMK35W	SMK35GW	SMSK35W	SMSK35GW	6	35	0 −15	52	0 −22	135
SMK40W	SMK40GW	SMSK40W	SMSK40GW	6	40		60		151
SMK50W	SMK50GW	SMSK50W	SMSK50GW	6	50		80		192
SMK60W	SMK60GW	SMSK60W	SMSK60GW	6	60	0/−20	90	0/−25	209

flange					eccentricity	perpendicularity	basic load rating		allowable	mass	shaft
							dynamic	static	static moment		diameter
Df mm	K mm	t mm	P.C.D. mm	X×Y×Z mm	μm	μm	C N	Co N	Mo N・m	g	mm
28	22	5	20	3.5×6×3.1	15	15	323	530	2.18	25	6
32	25	5	24	3.5×6×3.1			431	784	4.31	43	8
40	30	6	29	4.5×7.5×4.1			588	1,100	7.24	78	10
42	32	6	32	4.5×7.5×4.1			813	1,570	10.9	90	12
43	34	6	33	4.5×7.5×4.1			813	1,570	11.6	108	13
48	37	6	38	4.5×7.5×4.1			1,230	2,350	19.7	165	16
54	42	8	43	5.5×9×5.1	20	20	1,400	2,740	26.8	225	20
62	50	8	51	5.5×9×5.1			1,560	3,140	43.4	500	25
74	58	10	60	6.6×11×6.1			2,490	5,490	82.8	590	30
82	64	10	67	6.6×11×6.1	25	25	2,650	6,270	110	930	35
96	75	13	78	9×14×8.1			3,430	8,040	147	1,380	40
116	92	13	98	9×14×8.1			6,080	15,900	397	3,400	50
134	106	18	112	11×17×11.1	30	30	7,550	20,000	530	4,060	60

1N≒0.102kgf 1N・m≒0.102kgf・m

www.bergab.ru Берг АБ bergab@ya.ru Тел. (495)-228-06-21, факс (495) 223-3071

www.bergab.ru Берг АБ bergab@ya.ru Тел. (495)-228-06-21, факс (495) 223-3071

KBK-W TYPE (Euro Standard)

— Square Flange Double-Wide Type —

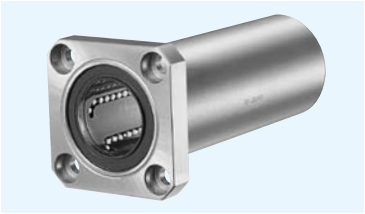

part number structure

example **KBSK 25 G W UU - SK**

- **KBSK**: specification
  - **KBK**: standard
  - **KBSK**: anti-corrosion
- **25**: inner contact diameter (dr)
- **G**: retainer material
  - **blank**: standard/steel
  - anti-corrosion/stainless steel
  - **G**: resin
- **W**: double-wide type
- **UU**: seal
  - **blank**: without seal
  - **UU**: seals on both sides
- **SK**: outer cylinder surface treatment
  - **blank**: no surface treatment
  - **SK**: electroless nickel plating
  - **LF**: low temperature black chrome treatment with fluoride coating
  - **SB**: black oxide (not available on anti-corrosion type)
  - **SC**: industrial chrome plating

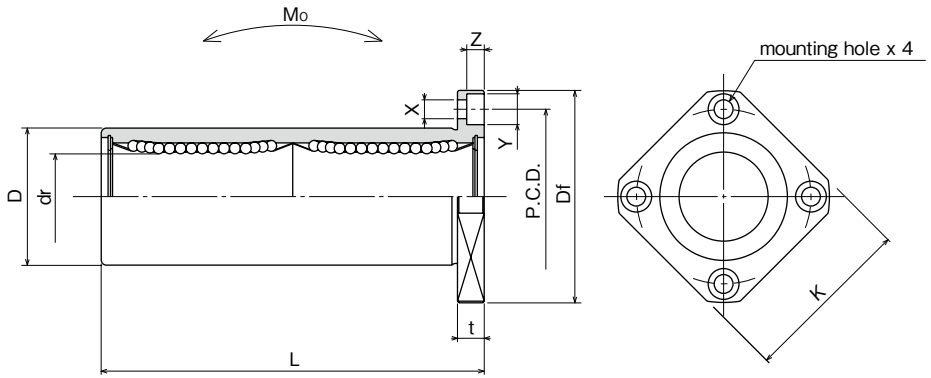

part number				number of ball circuits	major dimensions				
standard		anti-corrosion			dr		D		L
steel retainer	resin retainer	stainless retainer	resin retainer		mm	tolerance μm	mm	tolerance μm	±0.3 mm
KBK 8W	KBK 8GW	KBSK 8W	KBSK 8GW	4	8	+ 9	16	0/−13	46
KBK12W	KBK12GW	KBSK12W	KBSK12GW	4	12	− 1	22	0	61
KBK16W	KBK16GW	KBSK16W	KBSK16GW	4	16	+11	26	−16	68
KBK20W	KBK20GW	KBSK20W	KBSK20GW	5	20	− 1	32	0	80
KBK25W	KBK25GW	KBSK25W	KBSK25GW	6	25	+13	40	−19	112
KBK30W	KBK30GW	KBSK30W	KBSK30GW	6	30	− 2	47		123
KBK40W	KBK40GW	KBSK40W	KBSK40GW	6	40	+16	62	0	151
KBK50W	KBK50GW	KBSK50W	KBSK50GW	6	50	− 4	75	−22	192
KBK60W	KBK60GW	KBSK60W	KBSK60GW	6	60		90	0/−25	209

flange					eccentricity	perpendicularity	basic load rating		allowable	mass	shaft diameter
							dynamic	static	static moment		
Df mm	K mm	t mm	P.C.D. mm	X×Y×Z mm	μm	μm	C N	Co N	Mo N・m	g	mm
32	25	5	24	3.5×6×3.1	15	15	421	804	4.3	51	8
42	32	6	32	4.5×7.5×4.1			813	1,570	11.7	90	12
46	35	6	36	4.5×7.5×4.1			921	1,780	14.2	135	16
54	42	8	43	5.5×9×5.1	17	17	1,370	2,740	25.0	225	20
62	50	8	51	5.5×9×5.1			1,570	3,140	44.0	500	25
76	60	10	62	6.6×11×6.1			2,500	5,490	78.9	720	30
98	75	13	80	9×14×8.1	20	20	3,430	8,040	147	1,600	40
112	88	13	94	9×14×8.1			6,080	15,900	396	2,620	50
134	106	18	112	11×17×11.1	25	25	7,550	20,000	487	4,480	60

1N≒0.102kgf 1N・m≒0.102kgf・m

www.bergab.ru Берг АБ bergab@ya.ru Тел. (495)-228-06-21, факс (495) 223-3071

www.bergab.ru Берг АБ bergab@ya.ru Тел. (495)-228-06-21, факс (495) 223-3071

SWK-W TYPE (Inch Standard)

– Square Flange Double-Wide Type –

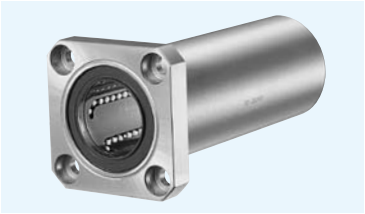

part number structure

example **SWSK 16 G W UU - SK**

- specification
  - **SWK**: standard
  - **SWSK**: anti-corrosion
- size
- retainer material
  - **blank**: standard/steel
  - anti-corrosion/stainless steel
  - **G**: resin
- double-wide type
- seal
  - **blank**: without seal
  - **UU**: seals on both sides
- outer cylinder surface treatment
  - **blank**: no surface treatment
  - **SK**: electroless nickel plating
  - **LF**: low temperature black chrome treatment with fluoride coating
  - **SB**: black oxide (not available on anti-corrosion type)
  - **SC**: industrial chrome plating

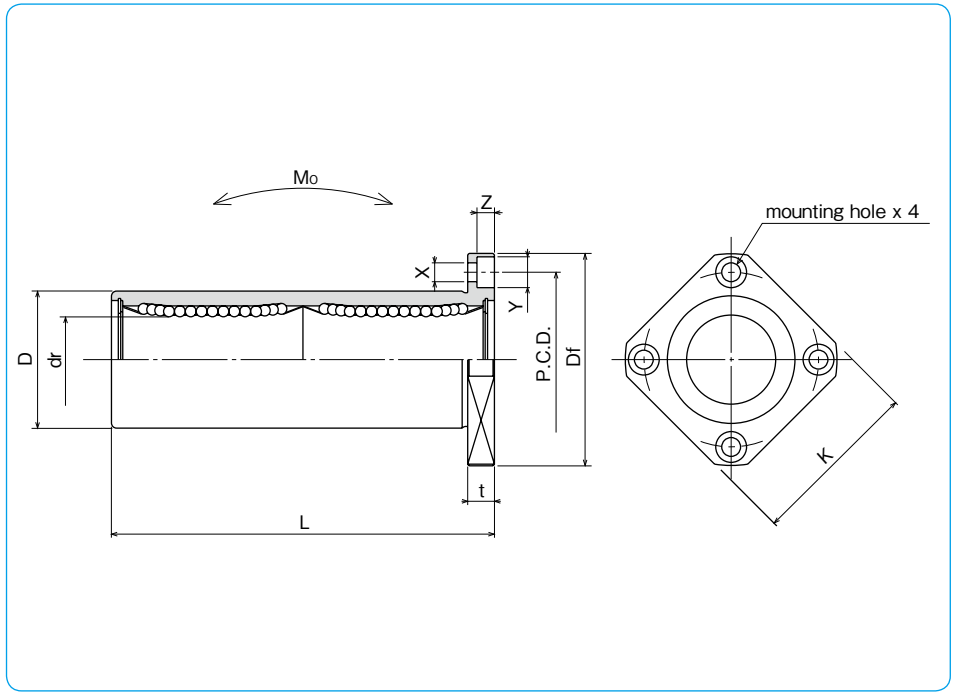

part number: standard, steel retainer	part number: standard, resin retainer	part number: anti-corrosion, stainless retainer	part number: anti-corrosion, resin retainer	number of ball circuits	dr inch (mm)	dr tolerance inch/(μm)	D inch (mm)	D tolerance inch/(μm)	L ±.012 (±0.3) inch/(mm)
SWK 4W	SWK 4GW	SWSK 4W	SWSK 4GW	4	.2500 (6.350)	0 −.00040 (−10)	.5000 (12.700)	0 −.00050 (−13)	1.3750 (34.925)
SWK 6W	SWK 6GW	SWSK 6W	SWSK 6GW	4	.3750 (9.525)		.6250 (15.875)	0 −.00065 (−16)	1.5938 (40.481)
SWK 8W	SWK 8GW	SWSK 8W	SWSK 8GW	4	.5000 (12.700)		.8750 (22.225)		2.3750 (60.325)
SWK10W	SWK10GW	SWSK10W	SWSK10GW	4	.6250 (15.875)		1.1250 (28.575)		2.8125 (71.438)
SWK12W	SWK12GW	SWSK12W	SWSK12GW	5	.7500 (19.050)	0 −.00050 (−12)	1.2500 (31.750)	0 −.00075 (−19)	3.0937 (78.581)
SWK16W	SWK16GW	SWSK16W	SWSK16GW	6	1.0000 (25.400)		1.5625 (39.688)		4.2813 (108.744)
SWK20W	SWK20GW	SWSK20W	SWSK20GW	6	1.2500 (31.750)	0 −.00060 (−15)	2.0000 (50.800)	0 −.00090 (−22)	5.0000 (127.000)
SWK24W	SWK24GW	SWSK24W	SWSK24GW	6	1.5000 (38.100)		2.3750 (60.325)		5.6875 (144.463)
SWK32W	SWK32GW	SWSK32W	SWSK32GW	6	2.0000 (50.800)		3.0000 (76.200)	0 −.00100 (−25)	7.7500 (196.850)

flange Df inch/(mm)	flange K inch/(mm)	flange t inch/(mm)	flange P.C.D. inch/(mm)	flange X×Y×Z inch/(mm)	eccentricity inch (μm)	perpendicularity inch (μm)	basic load rating dynamic C N	basic load rating static Co N	allowable static moment Mo N・m	mass g	shaft diameter inch/(mm)
1.2500 (31.750)	1.0000 (25.400)	.2188 (5.556)	.8750 (22.225)	.1563×.2500×.1406 (3.969×6.350×3.572)	.0006 (15)	.0006 (15)	323	530	2.0	33	1/4 (6.350)
1.5000 (38.100)	1.2500 (31.750)	.2500 (6.350)	1.0625 (26.988)	.1875×.2969×.1719 (4.763×7.541×4.366)			353	630	2.7	45	3/8 (9.525)
1.7500 (44.450)	1.3750 (34.925)	.2500 (6.350)	1.3125 (33.338)	.1875×.2969×.1719 (4.763×7.541×4.366)			813	1,570	11.5	106	1/2 (12.700)
2.0000 (50.800)	1.5000 (38.100)	.2500 (6.350)	1.5625 (39.688)	.1875×.2969×.1719 (4.763×7.541×4.366)			1,230	2,350	20.0	200	5/8 (15.875)
2.1875 (55.563)	1.6875 (42.863)	.3125 (7.938)	1.7188 (43.656)	.2188×.3438×.2031 (5.556×8.731×5.159)	.0008 (20)	.0008 (20)	1,370	2,740	26.5	240	3/4 (19.050)
2.5000 (63.500)	2.0000 (50.800)	.3125 (7.938)	2.0313 (51.594)	.2188×.3438×.2031 (5.556×8.731×5.159)			1,570	3,140	41.2	470	1 (25.400)
3.1250 (79.375)	2.5000 (63.500)	.3750 (9.525)	2.5625 (65.088)	.2813×.4063×.2656 (7.144×10.319×6.747)	.0010 (25)	.0010 (25)	2,500	5,490	84.8	935	1-1/4 (31.750)
3.7500 (95.250)	3.0000 (76.200)	.5000 (12.700)	3.0625 (77.788)	.3437×.5000×.3281 (8.731×12.700×8.334)			3,430	8,040	143	1,460	1-1/2 (38.100)
4.3750 (111.125)	3.5000 (88.900)	.5000 (12.700)	3.6875 (93.662)	.3437×.5000×.3281 (8.731×12.700×8.334)	.0012 (30)	.0012 (30)	6,080	15,900	399	2,620	2 (50.800)

1N≒0.225lbf 1N・m≒0.738lb・ft
1kg≒2.205lbs

www.bergab.ru Берг АБ bergab@ya.ru Тел. (495)-228-06-21, факс (495) 223-3071

www.bergab.ru Берг АБ bergab@ya.ru Тел. (495)-228-06-21, факс (495) 223-3071

SMT-W TYPE

— Two Side Cut Double-Wide Flange Type —

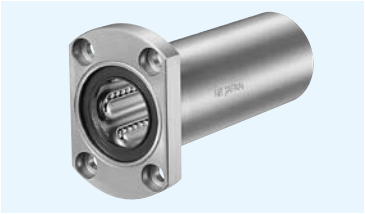

part number structure

example **SMST 25 G W UU - SK**

- **SMST**: specification
  - **SMT**: standard
  - **SMST**: anti-corrosion
- **25**: inner contact diameter (dr)
- **G**: retainer material
  - **blank**: standard/steel
  - anti-corrosion/stainless steel
  - **G**: resin
- **W**: double-wide type
- **UU**: seals on both sides
- **SK**: outer cylinder surface treatment
  - **blank**: no surface treatment
  - **SK**: electroless nickel plating
  - **LF**: low temperature black chrome treatment with fluoride coating
  - **SB**: black oxide (not available on anti-corrosion type)
  - **SC**: industrial chrome plating

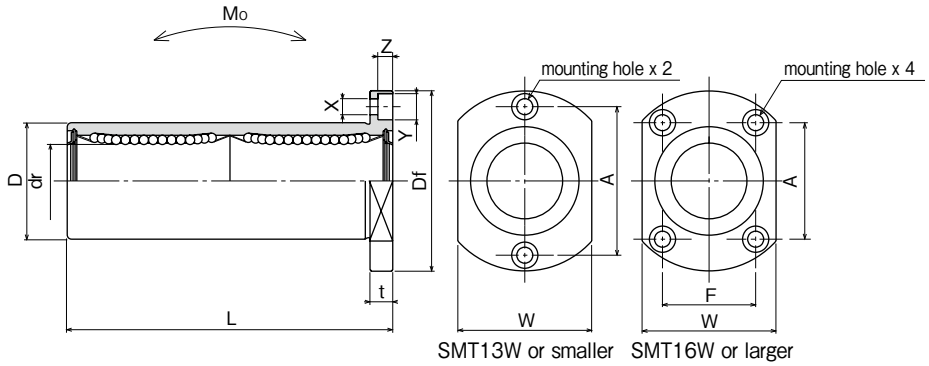

part number* standard steel retainer	standard resin retainer	anti-corrosion stainless retainer	anti-corrosion resin retainer	number of ball circuits	dr mm	dr tolerance μm	D mm	D tolerance μm	L ±0.3 mm
SMT 6WUU	SMT 6GWUU	SMST 6WUU	SMST 6GWUU	4	6	0 −10	12	0 −13	35
SMT 8WUU	SMT 8GWUU	SMST 8WUU	SMST 8GWUU	4	8		15		45
SMT10WUU	SMT10GWUU	SMST10WUU	SMST10GWUU	4	10		19	0 −16	55
SMT12WUU	SMT12GWUU	SMST12WUU	SMST12GWUU	4	12		21		57
SMT13WUU	SMT13GWUU	SMST13WUU	SMST13GWUU	4	13		23		61
SMT16WUU	SMT16GWUU	SMST16WUU	SMST16GWUU	4	16		28		70
SMT20WUU	SMT20GWUU	SMST20WUU	SMST20GWUU	5	20	0 −12	32	0 −19	80
SMT25WUU	SMT25GWUU	SMST25WUU	SMST25GWUU	6	25		40		112
SMT30WUU	SMT30GWUU	SMST30WUU	SMST30GWUU	6	30		45		123

* UU type is standard.

Df mm	W mm	t mm	flange A mm	F mm	X×Y×Z mm	eccentricity μm	perpendicularity μm	basic load rating dynamic C N	static Co N	allowable static moment Mo N・m	mass g	shaft diameter mm
28	18	5	20	—	3.5×6×3.1	15	15	323	530	2.18	28	6
32	21	5	24	—	3.5×6×3.1			431	784	4.31	47	8
40	25	6	29	—	4.5×7.5×4.1			588	1,100	7.24	90	10
42	27	6	32	—	4.5×7.5×4.1			813	1,570	10.9	102	12
43	29	6	33	—	4.5×7.5×4.1			813	1,570	11.6	123	13
48	34	6	31	22	4.5×7.5×4.1			1,230	2,350	19.7	182	16
54	38	8	36	24	5.5×9×5.1	20	20	1,400	2,740	26.8	247	20
62	46	8	40	32	5.5×9×5.1			1,560	3,140	43.4	525	25
74	51	10	49	35	6.6×11×6.1			2,490	5,490	82.8	645	30

1N≒0.102kgf 1N・m≒0.102kgf・m

www.bergab.ru Берг АБ bergab@ya.ru Тел. (495)-228-06-21, факс (495) 223-3071

www.bergab.ru Берг АБ bergab@ya.ru Тел. (495)-228-06-21, факс (495) 223-3071

SMFC TYPE

– Center Mount Round Flange Type –

part number structure

example **SMSFC 25 G UU - SK**

specification
SMFC: standard
SMSFC: anti-corrosion

inner contact diameter (dr)

retainer material
blank: standard/steel
anti-corrosion/stainless steel
G: resin

seal
blank: without seal
UU: seals on both sides

outer cylinder
surface treatment
blank: no surface treatment
SK: electroless nickel plating
LF: low temperature black chrome treatment with fluoride coating
SB: black oxide (not available on anti-corrosion type)
SC: industrial chrome plating

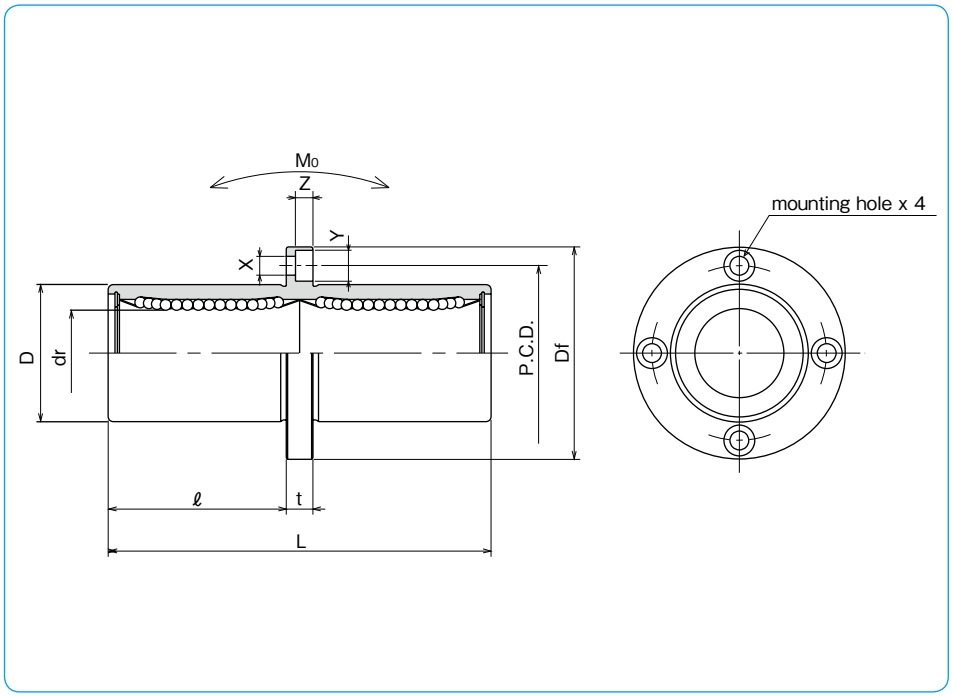

part number standard steel retainer	part number standard resin retainer	part number anti-corrosion stainless retainer	part number anti-corrosion resin retainer	number of ball circuits	dr mm	dr tolerance μm	D mm	D tolerance μm	L ±0.3 mm
SMFC 6	SMFC 6G	SMSFC 6	SMSFC 6G	4	6	0 −10	12	0 −13	35
SMFC 8	SMFC 8G	SMSFC 8	SMSFC 8G	4	8		15		45
SMFC10	SMFC10G	SMSFC10	SMSFC10G	4	10		19	0 −16	55
SMFC12	SMFC12G	SMSFC12	SMSFC12G	4	12		21		57
SMFC13	SMFC13G	SMSFC13	SMSFC13G	4	13		23		61
SMFC16	SMFC16G	SMSFC16	SMSFC16G	4	16		28		70
SMFC20	SMFC20G	SMSFC20	SMSFC20G	5	20	0 −12	32	0 −19	80
SMFC25	SMFC25G	SMSFC25	SMSFC25G	6	25		40		112
SMFC30	SMFC30G	SMSFC30	SMSFC30G	6	30		45		123
SMFC35	SMFC35G	SMSFC35	SMSFC35G	6	35	0 −15	52	0 −22	135
SMFC40	SMFC40G	SMSFC40	SMSFC40G	6	40		60		151
SMFC50	SMFC50G	SMSFC50	SMSFC50G	6	50		80		192
SMFC60	SMFC60G	SMSFC60	SMSFC60G	6	60	0/−20	90	0/−25	209

flange ℓ mm	flange Df mm	flange t mm	flange P.C.D. mm	flange X×Y×Z mm	eccentricity μm	perpendicularity μm	basic load rating dynamic C N	basic load rating static Co N	allowable static moment Mo N・m	mass g	shaft diameter mm
15	28	5	20	3.5×6×3.1	15	15	323	530	2.18	31	6
20	32	5	24	3.5×6×3.1			431	784	4.31	51	8
24.5	40	6	29	4.5×7.5×4.1			588	1,100	7.24	98	10
25.5	42	6	32	4.5×7.5×4.1			813	1,570	10.9	110	12
27.5	43	6	33	4.5×7.5×4.1			813	1,570	11.6	130	13
32	48	6	38	4.5×7.5×4.1			1,230	2,350	19.7	190	16
36	54	8	43	5.5×9×5.1	20	20	1,400	2,740	26.8	260	20
52	62	8	51	5.5×9×5.1			1,560	3,140	43.4	540	25
56.5	74	10	60	6.6×11×6.1			2,490	5,490	82.8	680	30
62.5	82	10	67	6.6×11×6.1	25	25	2,650	6,270	110	1,020	35
69	96	13	78	9×14×8.1			3,430	8,040	147	1,570	40
89.5	116	13	98	9×14×8.1			6,080	15,900	397	3,600	50
95.5	134	18	112	11×17×11.1	30	30	7,550	20,000	530	4,500	60

1N≒0.102kgf 1N・m≒0.102kgf・m

www.bergab.ru Берг АБ bergab@ya.ru Тел. (495)-228-06-21, факс (495) 223-3071

www.bergab.ru Берг АБ bergab@ya.ru Тел. (495)-228-06-21, факс (495) 223-3071

KBFC TYPE (Euro Standard)

– Center Mount Round Flange Type –

part number structure

example **KBSFC 25 G UU - SK**

specification
KBFC: standard
KBSFC: anti-corrosion

inner contact diameter (dr)

retainer material
blank: standard/steel
anti-corrosion/stainless steel
G: resin

seal
blank: without seal
UU: seals on both sides

outer cylinder
surface treatment
blank: no surface treatment
SK: electroless nickel plating
LF: low temperature black chrome treatment with fluoride coating
SB: black oxide (not available on anti-corrosion type)
SC: industrial chrome plating

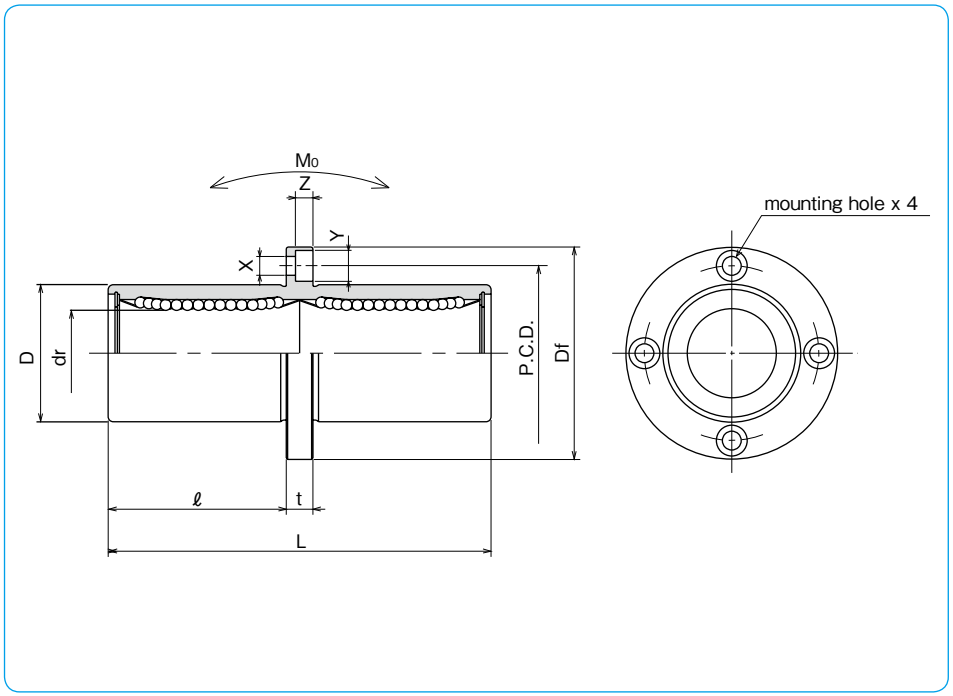

part number				number of ball circuits	major dimensions				
standard		anti-corrosion			dr		D		L
steel retainer	resin retainer	stainless retainer	resin retainer		mm	tolerance μm	mm	tolerance μm	±0.3 mm
KBFC 8	KBFC 8G	KBSFC 8	KBSFC 8G	4	8	+ 9	16	0/−13	46
KBFC12	KBFC12G	KBSFC12	KBSFC12G	4	12	− 1	22	0	61
KBFC16	KBFC16G	KBSFC16	KBSFC16G	4	16	+11	26	−16	68
KBFC20	KBFC20G	KBSFC20	KBSFC20G	5	20	− 1	32	0	80
KBFC25	KBFC25G	KBSFC25	KBSFC25G	6	25	+13	40	−19	112
KBFC30	KBFC30G	KBSFC30	KBSFC30G	6	30	− 2	47		123
KBFC40	KBFC40G	KBSFC40	KBSFC40G	6	40	+16	62	0	151
KBFC50	KBFC50G	KBSFC50	KBSFC50G	6	50	− 4	75	−22	192
KBFC60	KBFC60G	KBSFC60	KBSFC60G	6	60		90	0/−25	209

flange					eccentricity	perpendicularity	basic load rating		allowable	mass	shaft diameter
							dynamic	static	static moment		
ℓ mm	Df mm	t mm	P.C.D. mm	X×Y×Z mm	μm	μm	C N	Co N	Mo N・m	g	mm
20.5	32	5	24	3.5×6×3.1	15	15	421	804	4.3	59	8
27.5	42	6	32	4.5×7.5×4.1			813	1,570	11.7	110	12
31	46	6	36	4.5×7.5×4.1			921	1,780	14.2	160	16
36	54	8	43	5.5×9×5.1	17	17	1,370	2,740	25.0	260	20
52	62	8	51	5.5×9×5.1			1,570	3,140	44.0	540	25
56.5	76	10	62	6.6×11×6.1			2,500	5,490	78.9	815	30
69	98	13	80	9×14×8.1	20	20	3,430	8,040	147	1,805	40
89.5	112	13	94	9×14×8.1			6,080	15,900	396	2,820	50
95.5	134	18	112	11×17×11.1	25	25	7,550	20,000	487	4,920	60

1N≒0.102kgf 1N・m≒0.102kgf・m

www.bergab.ru Берг АБ bergab@ya.ru Тел. (495)-228-06-21, факс (495) 223-3071

www.bergab.ru Берг АБ bergab@ya.ru Тел. (495)-228-06-21, факс (495) 223-3071

SWFC TYPE (Inch Standard)

– Center Mount Round Flange Type –

part number structure

example **SWSFC 16 G UU - SK**

specification
SWFC: standard
SWSFC: anti-corrosion

size

retainer material
blank: standard/steel
anti-corrosion/stainless steel
G: resin

seal
blank: without seal
UU: seals on both sides

outer cylinder
surface treatment
blank: no surface treatment
SK: electroless nickel plating
LF: low temperature black chrome treatment with fluoride coating
SB: black oxide (not available on anti-corrosion type)
SC: industrial chrome plating

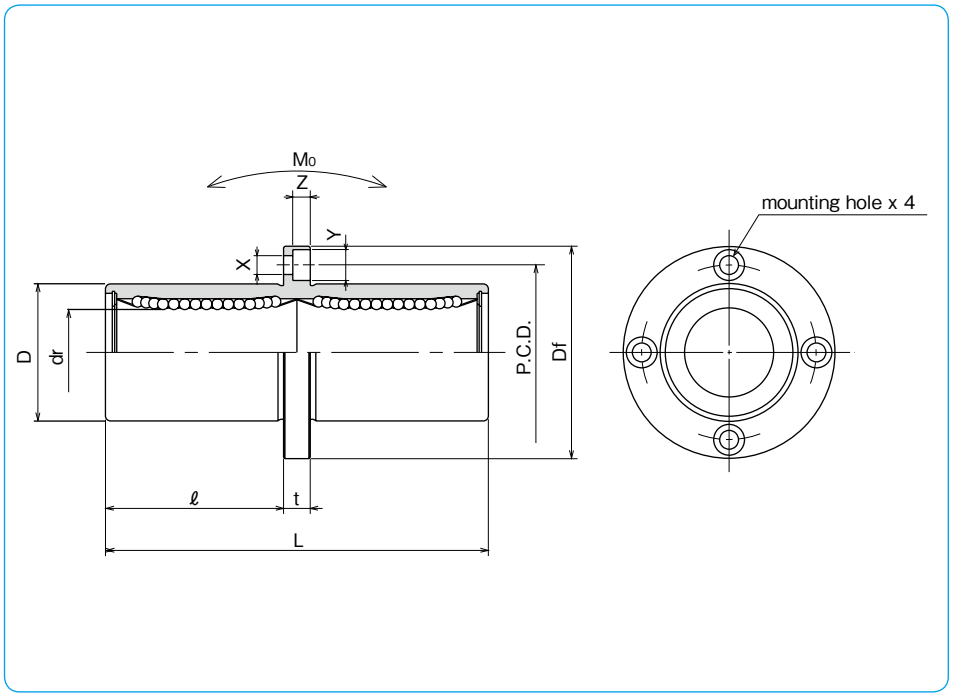

part number				number of ball circuits	major dimensions				
standard		anti-corrosion			dr		D		L
steel retainer	resin retainer	stainless retainer	resin retainer		inch (mm)	tolerance inch/(μm)	inch (mm)	tolerance inch/(μm)	±.012 (±0.3) inch/(mm)
SWFC 4	SWFC 4G	SWSFC 4	SWSFC 4G	4	.2500 (6.350)	0 −.00040 (−10)	.5000 (12.700)	0 −.00050 (−13)	1.3750 (34.925)
SWFC 6	SWFC 6G	SWSFC 6	SWSFC 6G	4	.3750 (9.525)		.6250 (15.875)	0 −.00065 (−16)	1.5938 (40.481)
SWFC 8	SWFC 8G	SWSFC 8	SWSFC 8G	4	.5000 (12.700)		.8750 (22.225)		2.3750 (60.325)
SWFC10	SWFC10G	SWSFC10	SWSFC10G	4	.6250 (15.875)		1.1250 (28.575)		2.8125 (71.438)
SWFC12	SWFC12G	SWSFC12	SWSFC12G	5	.7500 (19.050)	0 −.00050 (−12)	1.2500 (31.750)	0 −.00075 (−19)	3.0937 (78.581)
SWFC16	SWFC16G	SWSFC16	SWSFC16G	6	1.0000 (25.400)		1.5625 (39.688)		4.2813 (108.744)
SWFC20	SWFC20G	SWSFC20	SWSFC20G	6	1.2500 (31.750)	0 −.00060 (−15)	2.0000 (50.800)	0 −.00090 (−22)	5.0000 (127.000)
SWFC24	SWFC24G	SWSFC24	SWSFC24G	6	1.5000 (38.100)		2.3750 (60.325)		5.6875 (144.463)
SWFC32	SWFC32G	SWSFC32	SWSFC32G	6	2.0000 (50.800)		3.0000 (76.200)	0 −.00100 (−25)	7.7500 (196.850)

flange					eccentricity	perpendicularity	basic load rating		allowable	mass	shaft
							dynamic	static	static moment		diameter
ℓ inch/(mm)	Df inch/(mm)	t inch/(mm)	P.C.D. inch/(mm)	X×Y×Z inch/(mm)	inch (μm)	inch (μm)	C N	Co N	Mo N・m	g	inch/(mm)
.5781 (14.684)	1.2500 (31.750)	.2188 (5.556)	.8750 (22.225)	.1563×.2500×.1406 (3.969×6.350×3.572)	.0006 (15)	.0006 (15)	323	530	2.0	40	1/4 (6.350)
.6719 (17.066)	1.5000 (38.100)	.2500 (6.350)	1.0625 (26.988)	.1875×.2969×.1719 (4.763×7.541×4.366)			353	630	2.7	60	3/8 (9.525)
1.0625 (26.988)	1.7500 (44.450)	.2500 (6.350)	1.3125 (33.338)	.1875×.2969×.1719 (4.763×7.541×4.366)			813	1,570	11.5	126	1/2 (12.700)
1.2813 (32.544)	2.0000 (50.800)	.2500 (6.350)	1.5625 (39.688)	.1875×.2969×.1719 (4.763×7.541×4.366)			1,230	2,350	20.0	215	5/8 (15.875)
1.3906 (35.322)	2.1875 (55.563)	.3125 (7.938)	1.7188 (43.656)	.2188×.3438×.2031 (5.556×8.731×5.159)	.0008 (20)	.0008 (20)	1,370	2,740	26.5	280	3/4 (19.050)
1.9844 (50.403)	2.5000 (63.500)	.3125 (7.938)	2.0313 (51.594)	.2188×.3438×.2031 (5.556×8.731×5.159)			1,570	3,140	41.2	515	1 (25.400)
2.3125 (58.738)	3.1250 (79.375)	.3750 (9.525)	2.5625 (65.088)	.2813×.4063×.2656 (7.144×10.319×6.747)	.0010 (25)	.0010 (25)	2,500	5,490	84.8	1,020	1-1/4 (31.750)
2.5938 (65.882)	3.7500 (95.250)	.5000 (12.700)	3.0625 (77.788)	.3437×.5000×.3281 (8.731×12.700×8.334)			3,430	8,040	143	1,630	1-1/2 (38.100)
3.6250 (92.075)	4.3750 (111.125)	.5000 (12.700)	3.6875 (93.662)	.3437×.5000×.3281 (8.731×12.700×8.334)	.0012 (30)	.0012 (30)	6,080	15,900	399	2,800	2 (50.800)

1N≒0.225lbf 1N・m≒0.738lb・ft
1kg≒2.205lbs

www.bergab.ru Берг АБ bergab@ya.ru Тел. (495)-228-06-21, факс (495) 223-3071

www.bergab.ru Берг АБ bergab@ya.ru Тел. (495)-228-06-21, факс (495) 223-3071

SMKC TYPE

– Center Mount Square Flange Type –

part number structure

example **SMSKC 25 G UU - SK**

specification
SMKC: standard
SMSKC: anti-corrosion

inner contact diameter (dr)

retainer material
blank: standard/steel
anti-corrosion/stainless steel
G: resin

seal
blank: without seal
UU: seals on both sides

outer cylinder
surface treatment
blank: no surface treatment
SK: electroless nickel plating
LF: low temperature black chrome treatment with fluoride coating
SB: black oxide (not available on anti-corrosion type)
SC: industrial chrome plating

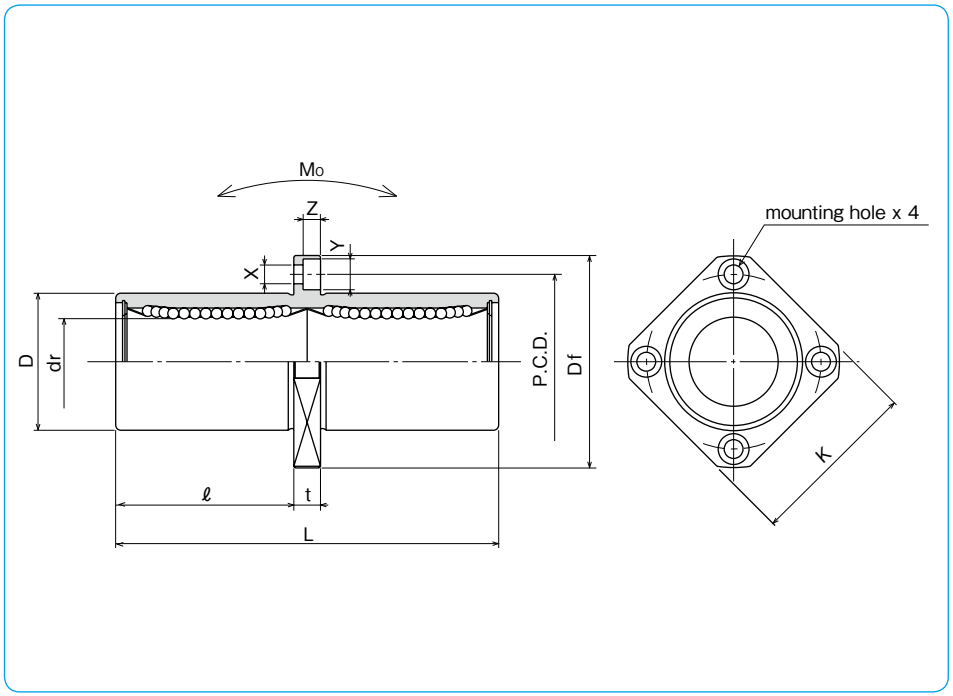

part number standard steel retainer	part number standard resin retainer	part number anti-corrosion stainless retainer	part number anti-corrosion resin retainer	number of ball circuits	major dimensions dr mm	dr tolerance μm	D mm	D tolerance μm	L ±0.3 mm
SMKC 6	SMKC 6G	SMSKC 6	SMSKC 6G	4	6	0 −10	12	0 −13	35
SMKC 8	SMKC 8G	SMSKC 8	SMSKC 8G	4	8		15		45
SMKC10	SMKC10G	SMSKC10	SMSKC10G	4	10		19	0 −16	55
SMKC12	SMKC12G	SMSKC12	SMSKC12G	4	12		21		57
SMKC13	SMKC13G	SMSKC13	SMSKC13G	4	13		23		61
SMKC16	SMKC16G	SMSKC16	SMSKC16G	4	16		28		70
SMKC20	SMKC20G	SMSKC20	SMSKC20G	5	20	0 −12	32	0 −19	80
SMKC25	SMKC25G	SMSKC25	SMSKC25G	6	25		40		112
SMKC30	SMKC30G	SMSKC30	SMSKC30G	6	30		45		123
SMKC35	SMKC35G	SMSKC35	SMSKC35G	6	35	0 −15	52	0 −22	135
SMKC40	SMKC40G	SMSKC40	SMSKC40G	6	40		60		151
SMKC50	SMKC50G	SMSKC50	SMSKC50G	6	50		80		192
SMKC60	SMKC60G	SMSKC60	SMSKC60G	6	60	0/−20	90	0/−25	209

flange ℓ mm	flange Df mm	flange K mm	flange t mm	flange P.C.D. mm	flange X×Y×Z mm	eccentricity μm	perpendicularity μm	basic load rating dynamic C N	basic load rating static Co N	allowable static moment Mo N・m	mass g	shaft diameter mm
15	28	22	5	20	3.5×6×3.1	15	15	323	530	2.18	25	6
20	32	25	5	24	3.5×6×3.1			431	784	4.31	43	8
24.5	40	30	6	29	4.5×7.5×4.1			588	1,100	7.24	78	10
25.5	42	32	6	32	4.5×7.5×4.1			813	1,570	10.9	90	12
27.5	43	34	6	33	4.5×7.5×4.1			813	1,570	11.6	108	13
32	48	37	6	38	4.5×7.5×4.1			1,230	2,350	19.7	165	16
36	54	42	8	43	5.5×9×5.1	20	20	1,400	2,740	26.8	225	20
52	62	50	8	51	5.5×9×5.1			1,560	3,140	43.4	500	25
56.5	74	58	10	60	6.6×11×6.1			2,490	5,490	82.8	590	30
62.5	82	64	10	67	6.6×11×6.1	25	25	2,650	6,270	110	930	35
69	96	75	13	78	9×14×8.1			3,430	8,040	147	1,380	40
89.5	116	92	13	98	9×14×8.1			6,080	15,900	397	3,400	50
95.5	134	106	18	112	11×17×11.1	30	30	7,550	20,000	530	4,060	60

1N≒0.102kgf 1N・m≒0.102kgf・m

www.bergab.ru Берг АБ bergab@ya.ru Тел. (495)-228-06-21, факс (495) 223-3071

www.bergab.ru Берг АБ bergab@ya.ru Тел. (495)-228-06-21, факс (495) 223-3071

KBKC TYPE (Euro Standard)

— Center Mount Square Flange Type —

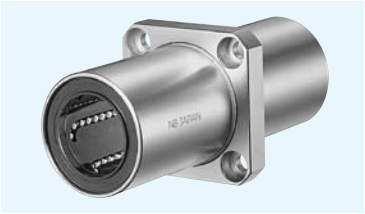

part number structure

example **KBSKC 25 G UU - SK**

specification
KBKC: standard
KBSKC: anti-corrosion

inner contact diameter (dr)

retainer material
blank: standard/steel
anti-corrosion/stainless steel
G: resin

seal
blank: without seal
UU: seals on both sides

outer cylinder
surface treatment
blank: no surface treatment
SK: electroless nickel plating
LF: low temperature black chrome treatment with fluoride coating
SB: black oxide (not available on anti-corrosion type)
SC: industrial chrome plating

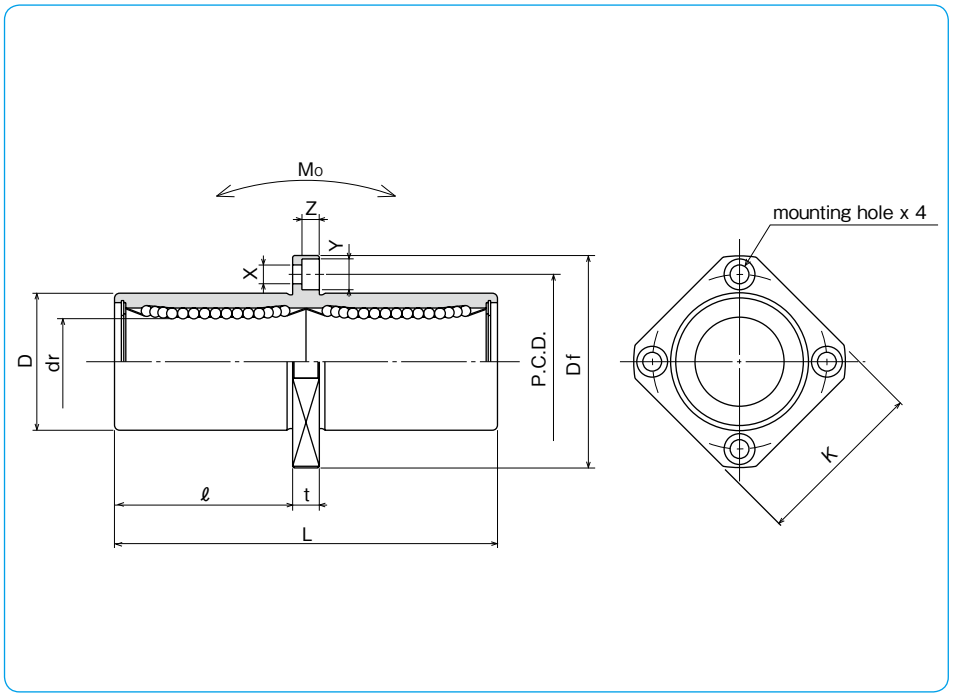

part number standard steel retainer	part number standard resin retainer	part number anti-corrosion stainless retainer	part number anti-corrosion resin retainer	number of ball circuits	major dimensions dr mm	dr tolerance μm	D mm	D tolerance μm	L ±0.3 mm
KBKC 8	KBKC 8G	KBSKC 8	KBSKC 8G	4	8	+ 9	16	0/−13	46
KBKC12	KBKC12G	KBSKC12	KBSKC12G	4	12	− 1	22	0	61
KBKC16	KBKC16G	KBSKC16	KBSKC16G	4	16	+11	26	−16	68
KBKC20	KBKC20G	KBSKC20	KBSKC20G	5	20	− 1	32	0	80
KBKC25	KBKC25G	KBSKC25	KBSKC25G	6	25	+13	40	−19	112
KBKC30	KBKC30G	KBSKC30	KBSKC30G	6	30	− 2	47		123
KBKC40	KBKC40G	KBSKC40	KBSKC40G	6	40	+16	62	0	151
KBKC50	KBKC50G	KBSKC50	KBSKC50G	6	50	− 4	75	−22	192
KBKC60	KBKC60G	KBSKC60	KBSKC60G	6	60		90	0/−25	209

flange ℓ mm	flange Df mm	flange K mm	flange t mm	flange P.C.D. mm	flange X×Y×Z mm	eccentricity μm	perpendicularity μm	basic load rating dynamic C N	basic load rating static Co N	allowable static moment Mo N・m	mass g	shaft diameter mm
20.5	32	25	5	24	3.5×6×3.1	15	15	421	804	4.3	51	8
27.5	42	32	6	32	4.5×7.5×4.1			813	1,570	11.7	90	12
31	46	35	6	36	4.5×7.5×4.1			921	1,780	14.2	135	16
36	54	42	8	43	5.5×9×5.1	17	17	1,370	2,740	25.0	225	20
52	62	50	8	51	5.5×9×5.1			1,570	3,140	44.0	500	25
56.5	76	60	10	62	6.6×11×6.1			2,500	5,490	78.9	720	30
69	98	75	13	80	9×14×8.1	20	20	3,430	8,040	147	1,600	40
89.5	112	88	13	94	9×14×8.1			6,080	15,900	396	2,620	50
95.5	134	106	18	112	11×17×11.1	25	25	7,550	20,000	487	4,480	60

1N≒0.102kgf 1N・m≒0.102kgf・m

www.bergab.ru Берг АБ bergab@ya.ru Тел. (495)-228-06-21, факс (495) 223-3071

www.bergab.ru Берг АБ bergab@ya.ru Тел. (495)-228-06-21, факс (495) 223-3071

SWKC TYPE (Inch Standard)

– Center Mount Square Flange Type –

part number structure

example **SWSKC 16 G UU-SK**

specification
SWKC: standard
SWSKC: anti-corrosion

size

retainer material
blank: standard/steel
anti-corrosion/stainless steel
G: resin

seal
blank: without seal
UU: seals on both sides

outer cylinder
surface treatment
blank: no surface treatment
SK: electroless nickel plating
LF: low temperature black chrome treatment with fluoride coating
SB: black oxide (not available on anti-corrosion type)
SC: industrial chrome plating

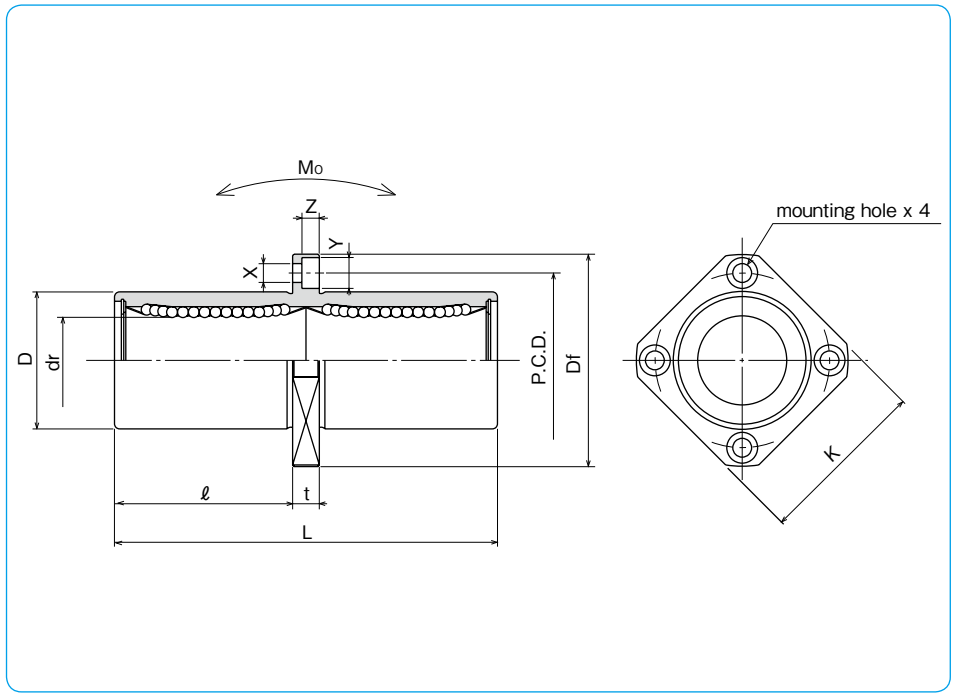

part number standard steel retainer	standard resin retainer	anti-corrosion stainless retainer	anti-corrosion resin retainer	number of ball circuits	dr inch (mm)	dr tolerance inch/(μm)	D inch (mm)	D tolerance inch/(μm)	L ±.012 (±0.3) inch/(mm)
SWKC 4	SWKC 4G	SWSKC 4	SWSKC 4G	4	.2500 (6.350)	0 −.00040 (−10)	.5000 (12.700)	0 −.00050 (−13)	1.3750 (34.925)
SWKC 6	SWKC 6G	SWSKC 6	SWSKC 6G	4	.3750 (9.525)		.6250 (15.875)	0 −.00065 (−16)	1.5938 (40.481)
SWKC 8	SWKC 8G	SWSKC 8	SWSKC 8G	4	.5000 (12.700)		.8750 (22.225)		2.3750 (60.325)
SWKC10	SWKC10G	SWSKC10	SWSKC10G	4	.6250 (15.875)		1.1250 (28.575)		2.8125 (71.438)
SWKC12	SWKC12G	SWSKC12	SWSKC12G	5	.7500 (19.050)	0 −.00050 (−12)	1.2500 (31.750)	0 −.00075 (−19)	3.0937 (78.581)
SWKC16	SWKC16G	SWSKC16	SWSKC16G	6	1.0000 (25.400)		1.5625 (39.688)		4.2813 (108.744)
SWKC20	SWKC20G	SWSKC20	SWSKC20G	6	1.2500 (31.750)	0 −.00060 (−15)	2.0000 (50.800)	0 −.00090 (−22)	5.0000 (127.000)
SWKC24	SWKC24G	SWSKC24	SWSKC24G	6	1.5000 (38.100)		2.3750 (60.325)		5.6875 (144.463)
SWKC32	SWKC32G	SWSKC32	SWSKC32G	6	2.0000 (50.800)		3.0000 (76.200)	0 −.00100 (−25)	7.7500 (196.850)

flange ℓ inch/(mm)	Df inch/(mm)	K inch/(mm)	t inch/(mm)	P.C.D. inch/(mm)	X×Y×Z inch/(mm)	eccentricity inch (μm)	perpendicularity inch (μm)	basic load rating dynamic C N	static Co N	allowable static moment Mo N・m	mass g	shaft diameter inch (mm)
.5781 (14.684)	1.2500 (31.750)	1.0000 (25.400)	.2188 (5.556)	.8750 (22.225)	.1563×.2500×.1406 (3.969×6.350×3.572)	.0006 (15)	.0006 (15)	323	530	2.0	33	1/4 (6.350)
.6719 (17.066)	1.5000 (38.100)	1.2500 (31.750)	.2500 (6.350)	1.0625 (26.988)	.1875×.2969×.1719 (4.763×7.541×4.366)			353	630	2.7	45	3/8 (9.525)
1.0625 (26.988)	1.7500 (44.450)	1.3750 (34.925)	.2500 (6.350)	1.3125 (33.338)	.1875×.2969×.1719 (4.763×7.541×4.366)			813	1,570	11.5	106	1/2 (12.700)
1.2813 (32.544)	2.0000 (50.800)	1.5000 (38.100)	.2500 (6.350)	1.5625 (39.688)	.1875×.2969×.1719 (4.763×7.541×4.366)			1,230	2,350	20.0	200	5/8 (15.875)
1.3906 (35.322)	2.1875 (55.563)	1.6875 (42.863)	.3125 (7.938)	1.7188 (43.656)	.2188×.3438×.2031 (5.556×8.731×5.159)	.0008 (20)	.0008 (20)	1,370	2,740	26.5	240	3/4 (19.050)
1.9844 (50.403)	2.5000 (63.500)	2.0000 (50.800)	.3125 (7.938)	2.0313 (51.594)	.2188×.3438×.2031 (5.556×8.731×5.159)			1,570	3,140	41.2	470	1 (25.400)
2.3125 (58.738)	3.1250 (79.375)	2.5000 (63.500)	.3750 (9.525)	2.5625 (65.088)	.2813×.4063×.2656 (7.144×10.319×6.747)	.0010 (25)	.0010 (25)	2,500	5,490	84.8	935	1-1/4 (31.750)
2.5938 (65.882)	3.7500 (95.250)	3.0000 (76.200)	.5000 (12.700)	3.0625 (77.788)	.3437×.5000×.3281 (8.731×12.700×8.334)			3,430	8,040	143	1,460	1-1/2 (38.100)
3.6250 (92.075)	4.3750 (111.125)	3.5000 (88.900)	.5000 (12.700)	3.6875 (93.662)	.3437×.5000×.3281 (8.731×12.700×8.334)	.0012 (30)	.0012 (30)	6,080	15,900	399	2,620	2 (50.800)

1N≒0.225lbf 1N・m≒0.738lb・ft
1kg≒2.205lbs

www.bergab.ru Берг АБ bergab@ya.ru Тел. (495)-228-06-21, факс (495) 223-3071

www.bergab.ru Берг АБ bergab@ya.ru Тел. (495)-228-06-21, факс (495) 223-3071

SMTC TYPE

– Two Side Cut Center Flange Type –

part number structure

example **SMSTC 25 G UU - SK**

specification
SMTC: standard
SMSTC: anti-corrosion

inner contact diameter (dr)

retainer material
blank: standard/steel
anti-corrosion/stainless steel
G: resin

seals on both sides

outer cylinder
surface treatment
blank: no surface treatment
SK: electroless nickel plating
LF: low temperature black chrome treatment with fluoride coating
SB: black oxide (not available on anti-corrosion type)
SC: industrial chrome plating

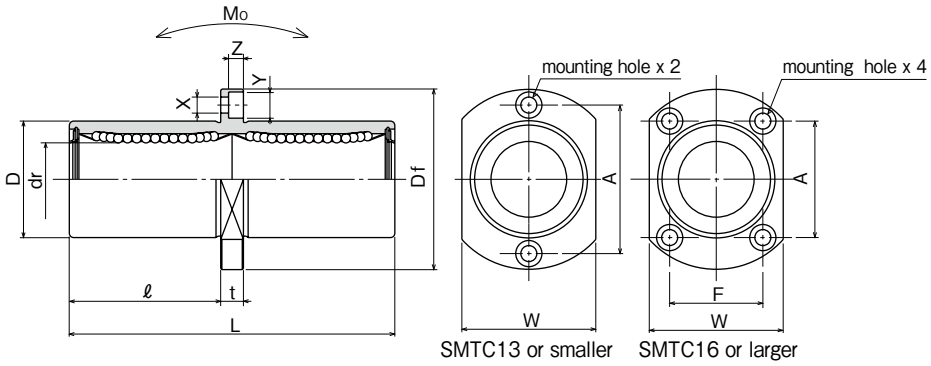

part number* standard steel retainer	standard resin retainer	anti-corrosion stainless retainer	anti-corrosion resin retainer	number of ball circuits	dr mm	dr tolerance μm	D mm	D tolerance μm	L ±0.3 mm
SMTC 6UU	SMTC 6GUU	SMSTC 6UU	SMSTC 6GUU	4	6	0 −10	12	0 −13	35
SMTC 8UU	SMTC 8GUU	SMSTC 8UU	SMSTC 8GUU	4	8		15		45
SMTC10UU	SMTC10GUU	SMSTC10UU	SMSTC10GUU	4	10		19	0 −16	55
SMTC12UU	SMTC12GUU	SMSTC12UU	SMSTC12GUU	4	12		21		57
SMTC13UU	SMTC13GUU	SMSTC13UU	SMSTC13GUU	4	13		23		61
SMTC16UU	SMTC16GUU	SMSTC16UU	SMSTC16GUU	4	16		28		70
SMTC20UU	SMTC20GUU	SMSTC20UU	SMSTC20GUU	5	20	0 −12	32	0 −19	80
SMTC25UU	SMTC25GUU	SMSTC25UU	SMSTC25GUU	6	25		40		112
SMTC30UU	SMTC30GUU	SMSTC30UU	SMSTC30GUU	6	30		45		123

* UU type is standard.

flange ℓ mm	Df mm	W mm	t mm	A mm	F mm	X×Y×Z mm	eccentricity μm	perpendicularity μm	basic load rating dynamic C N	static Co N	allowable static moment Mo N・m	mass g	shaft diameter mm
15	28	18	5	20	—	3.5×6×3.1	15	15	323	530	2.18	28	6
20	32	21	5	24	—	3.5×6×3.1			431	784	4.31	47	8
24.5	40	25	6	29	—	4.5×7.5×4.1			588	1,100	7.24	90	10
25.5	42	27	6	32	—	4.5×7.5×4.1			813	1,570	10.9	102	12
27.5	43	29	6	33	—	4.5×7.5×4.1			813	1,570	11.6	123	13
32	48	34	6	31	22	4.5×7.5×4.1			1,230	2,350	19.7	182	16
36	54	38	8	36	24	5.5×9×5.1	20	20	1,400	2,740	26.8	247	20
52	62	46	8	40	32	5.5×9×5.1			1,560	3,140	43.4	525	25
56.5	74	51	10	49	35	6.6×11×6.1			2,490	5,490	82.8	645	30

1N≒0.102kgf 1N・m≒0.102kgf・m

www.bergab.ru Берг АБ bergab@ya.ru Тел. (495)-228-06-21, факс (495) 223-3071

www.bergab.ru Берг АБ bergab@ya.ru Тел. (495)-228-06-21, факс (495) 223-3071

SMF-W-E TYPE

— Round Flange Double-Wide Pilot End Type —

part number structure

example **SMSF 25 G W UU - E - SK**

- specification
  SMF: standard
  SMSF: anti-corrosion
- inner contact diameter (dr)
- retainer material
  blank: standard/steel
  anti-corrosion/stainless steel
  G: resin
- double-wide type
- seals on both sides
- with pilot end
- outer cylinder surface treatment
  blank: no surface treatment
  SK: electroless nickel plating
  LF: low temperature black chrome treatment with fluoride coating
  SB: black oxide (not available on anti-corrosion type)
  SC: industrial chrome plating

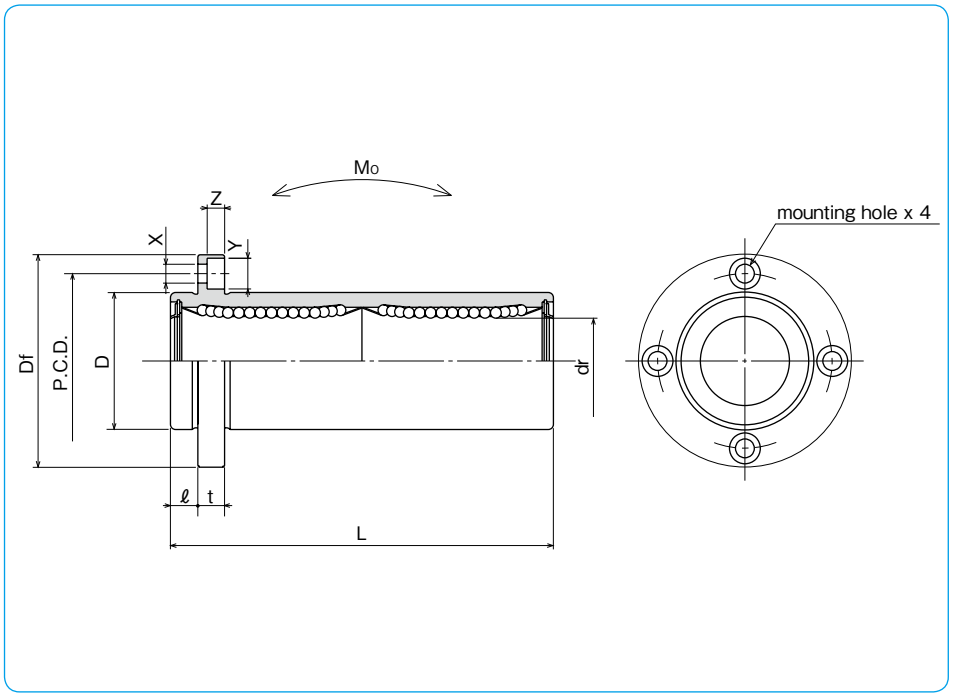

part number* standard steel retainer	standard resin retainer	anti-corrosion stainless retainer	anti-corrosion resin retainer	number of ball circuits	dr mm	dr tolerance μm	D mm	D tolerance μm	L ±0.3 mm
SMF 6WUU-E	SMF 6GWUU-E	SMSF 6WUU-E	SMSF 6GWUU-E	4	6	0 −10	12	0 −13	35
SMF 8WUU-E	SMF 8GWUU-E	SMSF 8WUU-E	SMSF 8GWUU-E	4	8		15		45
SMF10WUU-E	SMF10GWUU-E	SMSF10WUU-E	SMSF10GWUU-E	4	10		19	0 −16	55
SMF12WUU-E	SMF12GWUU-E	SMSF12WUU-E	SMSF12GWUU-E	4	12		21		57
SMF13WUU-E	SMF13GWUU-E	SMSF13WUU-E	SMSF13GWUU-E	4	13		23		61
SMF16WUU-E	SMF16GWUU-E	SMSF16WUU-E	SMSF16GWUU-E	4	16		28		70
SMF20WUU-E	SMF20GWUU-E	SMSF20WUU-E	SMSF20GWUU-E	5	20	0 −12	32	0 −19	80
SMF25WUU-E	SMF25GWUU-E	SMSF25WUU-E	SMSF25GWUU-E	6	25		40		112
SMF30WUU-E	SMF30GWUU-E	SMSF30WUU-E	SMSF30GWUU-E	6	30		45		123
SMF35WUU-E	SMF35GWUU-E	—	—	6	35	0 −15	52	0 −22	135
SMF40WUU-E	SMF40GWUU-E	—	—	6	40		60		151
SMF50WUU-E	SMF50GWUU-E	—	—	6	50		80		192
SMF60WUU-E	SMF60GWUU-E	—	—	6	60	0/−20	90	0/−25	209

* UU type is standard.

flange ℓ mm	Df mm	t mm	P.C.D. mm	X×Y×Z mm	eccentricity μm	perpendicularity μm	basic load rating dynamic C N	basic load rating static Co N	allowable static moment Mo N・m	mass g	shaft diameter mm
5	28	5	20	3.5×6×3.1	15	15	323	530	2.18	31	6
5	32	5	24	3.5×6×3.1			431	784	4.31	51	8
6	40	6	29	4.5×7.5×4.1			588	1,100	7.24	98	10
6	42	6	32	4.5×7.5×4.1			813	1,570	10.9	110	12
6	43	6	33	4.5×7.5×4.1			813	1,570	11.6	130	13
6	48	6	38	4.5×7.5×4.1			1,230	2,350	19.7	190	16
8	54	8	43	5.5×9×5.1	20	20	1,400	2,740	26.8	260	20
8	62	8	51	5.5×9×5.1			1,560	3,140	43.4	540	25
10	74	10	60	6.6×11×6.1			2,490	5,490	82.8	680	30
10	82	10	67	6.6×11×6.1	25	25	2,650	6,270	110	1,020	35
13	96	13	78	9×14×8.1			3,430	8,040	147	1,570	40
13	116	13	98	9×14×8.1			6,080	15,900	397	3,600	50
18	134	18	112	11×17×11.1	30	30	7,550	20,000	530	4,500	60

1N≒0.102kgf 1N・m≒0.102kgf・m

www.bergab.ru Берг АБ bergab@ya.ru Тел. (495)-228-06-21, факс (495) 223-3071

www.bergab.ru Берг АБ bergab@ya.ru Тел. (495)-228-06-21, факс (495) 223-3071

SMK-W-E TYPE

— Square Flange Double-Wide Pilot End Type —

part number structure

example **SMSK 25 G W UU - E - SK**

- specification
  - **SMK**: standard
  - **SMSK**: anti-corrosion
- inner contact diameter (dr)
- retainer material
  - **blank**: standard/steel
  - anti-corrosion/stainless steel
  - **G**: resin
- double-wide type
- seals on both sides
- with pilot end
- outer cylinder surface treatment
  - **blank**: no surface treatment
  - **SK**: electroless nickel plating
  - **LF**: low temperature black chrome treatment with fluoride coating
  - **SB**: black oxide (not available on anti-corrosion type)
  - **SC**: industrial chrome plating

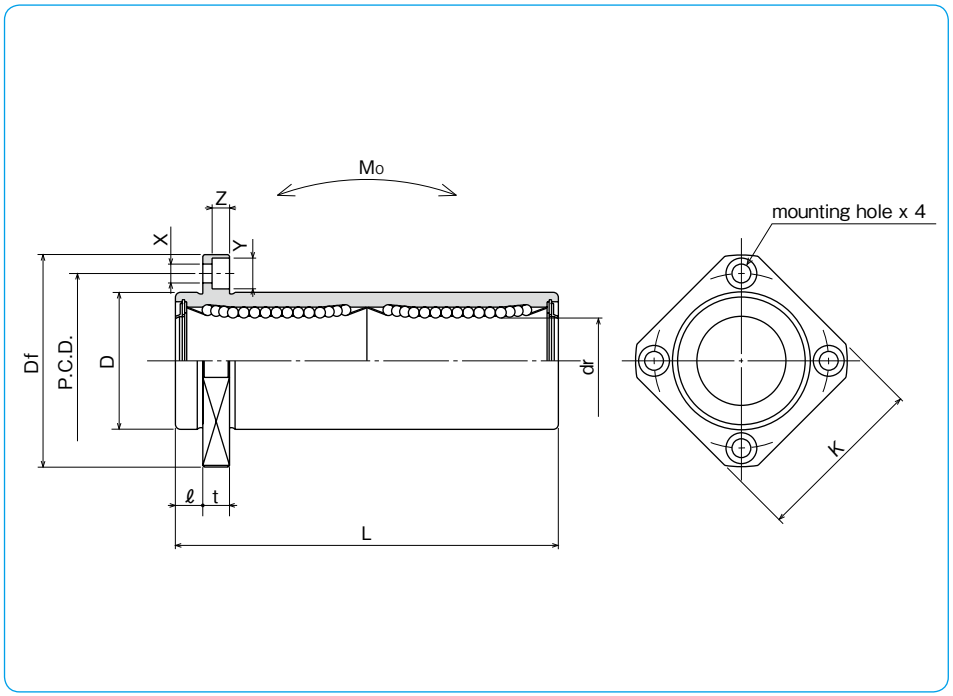

part number* standard steel retainer	standard resin retainer	anti-corrosion stainless retainer	anti-corrosion resin retainer	number of ball circuits	major dimensions dr mm	dr tolerance μm	D mm	D tolerance μm	L ±0.3 mm
SMK 6WUU-E	SMK 6GWUU-E	SMSK 6WUU-E	SMSK 6GWUU-E	4	6	0 −10	12	0 −13	35
SMK 8WUU-E	SMK 8GWUU-E	SMSK 8WUU-E	SMSK 8GWUU-E	4	8		15		45
SMK10WUU-E	SMK10GWUU-E	SMSK10WUU-E	SMSK10GWUU-E	4	10		19	0 −16	55
SMK12WUU-E	SMK12GWUU-E	SMSK12WUU-E	SMSK12GWUU-E	4	12		21		57
SMK13WUU-E	SMK13GWUU-E	SMSK13WUU-E	SMSK13GWUU-E	4	13		23		61
SMK16WUU-E	SMK16GWUU-E	SMSK16WUU-E	SMSK16GWUU-E	4	16		28		70
SMK20WUU-E	SMK20GWUU-E	SMSK20WUU-E	SMSK20GWUU-E	5	20	0 −12	32	0 −19	80
SMK25WUU-E	SMK25GWUU-E	SMSK25WUU-E	SMSK25GWUU-E	6	25		40		112
SMK30WUU-E	SMK30GWUU-E	SMSK30WUU-E	SMSK30GWUU-E	6	30		45		123
SMK35WUU-E	SMK35GWUU-E	—	—	6	35	0 −15	52	0 −22	135
SMK40WUU-E	SMK40GWUU-E	—	—	6	40		60		151
SMK50WUU-E	SMK50GWUU-E	—	—	6	50		80		192
SMK60WUU-E	SMK60GWUU-E	—	—	6	60	0/−20	90	0/−25	209

* UU type is standard.

flange ℓ mm	Df mm	K mm	t mm	P.C.D. mm	X×Y×Z mm	eccentricity μm	perpendicularity μm	basic load rating dynamic C N	basic load rating static Co N	allowable static moment Mo N・m	mass g	shaft diameter mm
5	28	22	5	20	3.5×6×3.1	15	15	323	530	2.18	25	6
5	32	25	5	24	3.5×6×3.1			431	784	4.31	43	8
6	40	30	6	29	4.5×7.5×4.1			588	1,100	7.24	78	10
6	42	32	6	32	4.5×7.5×4.1			813	1,570	10.9	90	12
6	43	34	6	33	4.5×7.5×4.1			813	1,570	11.6	108	13
6	48	37	6	38	4.5×7.5×4.1			1,230	2,350	19.7	165	16
8	54	42	8	43	5.5×9×5.1	20	20	1,400	2,740	26.8	225	20
8	62	50	8	51	5.5×9×5.1			1,560	3,140	43.4	500	25
10	74	58	10	60	6.6×11×6.1			2,490	5,490	82.8	590	30
10	82	64	10	67	6.6×11×6.1	25	25	2,650	6,270	110	930	35
13	96	75	13	78	9×14×8.1			3,430	8,040	147	1,380	40
13	116	92	13	98	9×14×8.1			6,080	15,900	397	3,400	50
18	134	106	18	112	11×17×11.1	30	30	7,550	20,000	530	4,060	60

1N≒0.102kgf 1N・m≒0.102kgf・m

www.bergab.ru Берг АБ bergab@ya.ru Тел. (495)-228-06-21, факс (495) 223-3071

www.bergab.ru Берг АБ bergab@ya.ru Тел. (495)-228-06-21, факс (495) 223-3071

SMT-W-E TYPE

— Two Side Cut Double-Wide Flange Pilot End Type —

part number structure

example **SMST 25 G W UU - E - SK**

- specification
  - **SMT**: standard
  - **SMST**: anti-corrosion
- inner contact diameter (dr)
- retainer material
  - **blank**: standard/steel
  - anti-corrosion/stainless steel
  - **G**: resin
- double-wide type
- seals on both sides
- with pilot end
- outer cylinder surface treatment
  - **blank**: no surface treatment
  - **SK**: electroless nickel plating
  - **LF**: low temperature black chrome treatment with fluoride coating
  - **SB**: black oxide (not available on anti-corrosion type)
  - **SC**: industrial chrome plating

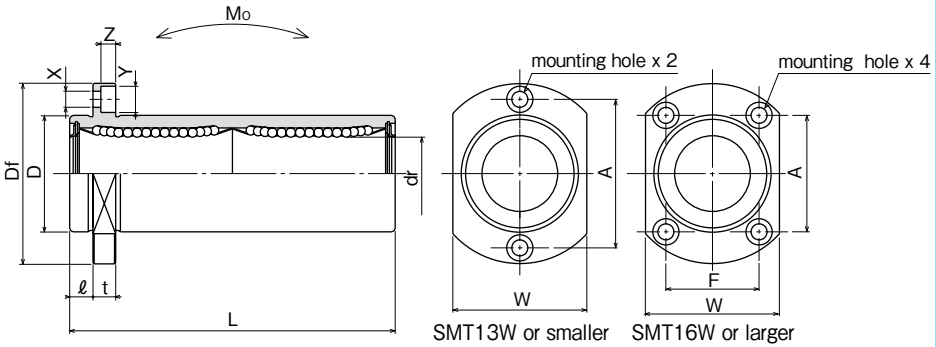

part number* standard: steel retainer	part number* standard: resin retainer	part number* anti-corrosion: stainless retainer	part number* anti-corrosion: resin retainer	number of ball circuits	dr mm	dr tolerance μm	D mm	D tolerance μm	L ±0.3 mm
SMT 6WUU-E	SMT 6GWUU-E	SMST 6WUU-E	SMST 6GWUU-E	4	6	0 −10	12	0 −13	35
SMT 8WUU-E	SMT 8GWUU-E	SMST 8WUU-E	SMST 8GWUU-E	4	8		15		45
SMT10WUU-E	SMT10GWUU-E	SMST10WUU-E	SMST10GWUU-E	4	10		19	0 −16	55
SMT12WUU-E	SMT12GWUU-E	SMST12WUU-E	SMST12GWUU-E	4	12		21		57
SMT13WUU-E	SMT13GWUU-E	SMST13WUU-E	SMST13GWUU-E	4	13		23		61
SMT16WUU-E	SMT16GWUU-E	SMST16WUU-E	SMST16GWUU-E	4	16		28		70
SMT20WUU-E	SMT20GWUU-E	SMST20WUU-E	SMST20GWUU-E	5	20	0 −12	32	0 −19	80
SMT25WUU-E	SMT25GWUU-E	SMST25WUU-E	SMST25GWUU-E	6	25		40		112
SMT30WUU-E	SMT30GWUU-E	SMST30WUU-E	SMST30GWUU-E	6	30		45		123

* UU type is standard.

ℓ mm	Df mm	W mm	t mm	A mm	F mm	X×Y×Z mm	eccentricity μm	perpendicularity μm	basic load rating dynamic C N	basic load rating static Co N	allowable static moment Mo N・m	mass g	shaft diameter mm
5	28	18	5	20	—	3.5×6×3.1	15	15	323	530	2.18	28	6
5	32	21	5	24	—	3.5×6×3.1			431	784	4.31	47	8
6	40	25	6	29	—	4.5×7.5×4.1			588	1,100	7.24	90	10
6	42	27	6	32	—	4.5×7.5×4.1			813	1,570	10.9	102	12
6	43	29	6	33	—	4.5×7.5×4.1			813	1,570	11.6	123	13
6	48	34	6	31	22	4.5×7.5×4.1			1,230	2,350	19.7	182	16
8	54	38	8	36	24	5.5×9×5.1	20	20	1,400	2,740	26.8	247	20
8	62	46	8	40	32	5.5×9×5.1			1,560	3,140	43.4	525	25
10	74	51	10	49	35	6.6×11×6.1			2,490	5,490	82.8	645	30

1N≒0.102kgf 1N・m≒0.102kgf・m

www.bergab.ru Берг АБ bergab@ya.ru Тел. (495)-228-06-21, факс (495) 223-3071

www.bergab.ru Берг АБ bergab@ya.ru Тел. (495)-228-06-21, факс (495) 223-3071

TRF TYPE

– Triple-Wide Round Flange Type –

part number structure

example **TRF 25 G UU - Q**

- TRF type
- inner contact diameter (dr)
- retainer material
  blank: steel
  G: resin
- seals on both sides
- grease fitting
  blank: without
  Q: grease fitting

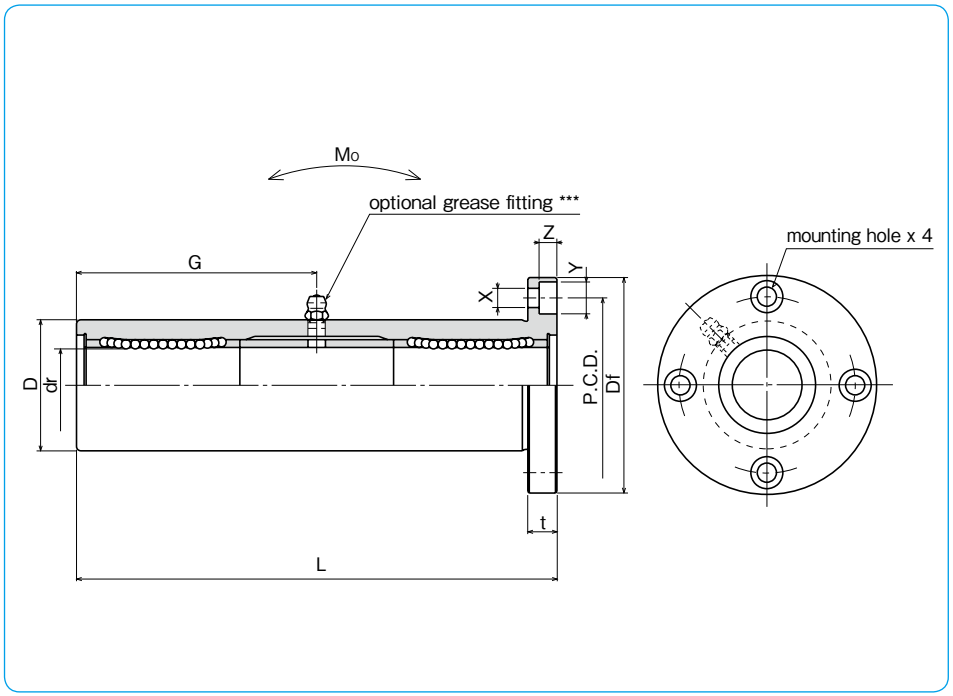

part number* steel retainer	part number* resin retainer	number of ball circuits	dr mm	dr tolerance μm	D mm	D tolerance μm	L ±0.3 mm
TRF 6UU	TRF 6GUU	4	6	0 −12	15	0/−18	51
TRF 8UU	TRF 8GUU	4	8		19	0 −21	66
TRF10UU	TRF10GUU	4	10		23		80
TRF12UU	TRF12GUU	4	12	0 −15	26		84
TRF13UU	TRF13GUU	4	13		28		90
TRF16UU	TRF16GUU	4	16		32	0 −25	103
TRF20UU	TRF20GUU	5	20	0 −18	40		118
TRF25UU	TRF25GUU	6	25		45		165
TRF30UU	TRF30GUU	6	30		52	0 −30	182
TRF35UU	TRF35GUU	6	35	0 −21	60		200
TRF40UU	TRF40GUU	6	40		65		230
TRF50UU	TRF50GUU	6	50		85	0 −35	290
TRF60UU	TRF60GUU	6	60	0/−25	100		310

* UU type is standard.
** Outer cylinder is treated with electroless nickel plating.
*** TRF6~8: A-M6x1 TRF10~30: A-M6F TRF35~60: A-R1/8

Df mm	t mm	flange P.C.D. mm	X×Y×Z mm	grease fitting G mm	eccentricity μm	perpendicularity μm	basic load rating dynamic C N	basic load rating static Co N	allowable static moment Mo N・m	mass g	shaft diameter mm
32	5	24	3.5×6×3.1	20.5	20	20	323	530	8.2	66	6
40	6	29	4.5×7.5×4.1	29			431	784	16.0	135	8
43	6	33	4.5×7.5×4.1	38			588	1,100	27.0	205	10
46	6	36	4.5×7.5×4.1	41			813	1,570	40.1	248	12
48	6	38	4.5×7.5×4.1	45			813	1,570	42.9	308	13
54	8	43	5.5×9×5.1	51	25	25	1,230	2,350	73.5	412	16
62	8	51	5.5×9×5.1	59			1,400	2,740	98.0	752	20
74	10	60	6.6×11×6.1	82.5			1,560	3,140	157	1,244	25
82	10	67	6.6×11×6.1	91			2,490	5,490	297	1,636	30
96	13	78	9×14×8.1	100	30	30	2,650	6,270	373	2,580	35
101	13	83	9×14×8.1	115			3,430	8,040	553	2,950	40
129	18	107	11×17×11.1	145			6,080	15,900	1,370	6,860	50
144	18	122	11×17×11.1	155			7,550	20,000	1,800	9,660	60

1N≒0.102kgf 1N・m≒0.102kgf・m

www.bergab.ru Берг АБ bergab@ya.ru Тел. (495)-228-06-21, факс (495) 223-3071

www.bergab.ru Берг АБ bergab@ya.ru Тел. (495)-228-06-21, факс (495) 223-3071

TRK TYPE

– Triple-Wide Square Flange Type –

part number structure

example **TRK 25 G UU - Q**

- TRK type
- inner contact diameter (dr)
- retainer material
  blank: steel
  G: resin
- seals on both sides
- grease fitting
  blank: without
  Q: grease fitting

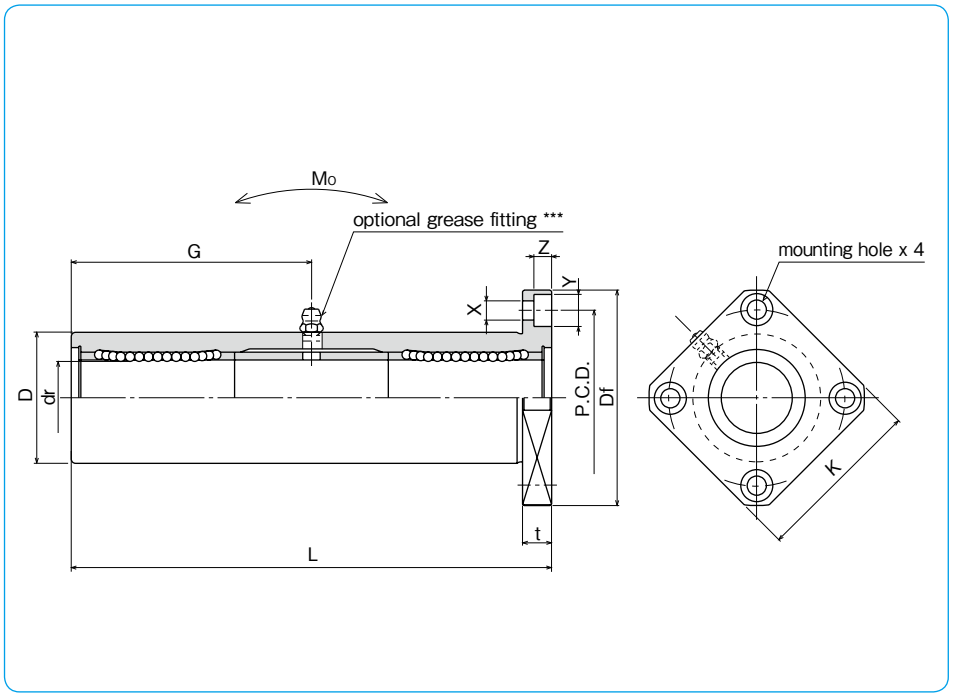

part number* steel retainer	part number* resin retainer	number of ball circuits	dr mm	dr tolerance μm	D mm	D tolerance μm	L ±0.3 mm
TRK 6UU	TRK 6GUU	4	6	0 −12	15	0/−18	51
TRK 8UU	TRK 8GUU	4	8		19	0 −21	66
TRK10UU	TRK10GUU	4	10		23		80
TRK12UU	TRK12GUU	4	12	0 −15	26		84
TRK13UU	TRK13GUU	4	13		28		90
TRK16UU	TRK16GUU	4	16		32	0 −25	103
TRK20UU	TRK20GUU	5	20	0 −18	40		118
TRK25UU	TRK25GUU	6	25		45		165
TRK30UU	TRK30GUU	6	30		52	0 −30	182
TRK35UU	TRK35GUU	6	35	0 −21	60		200
TRK40UU	TRK40GUU	6	40		65		230
TRK50UU	TRK50GUU	6	50		85	0	290
TRK60UU	TRK60GUU	6	60	0/−25	100	−35	310

* UU type is standard.
** Outer cylinder is treated with electroless nickel plating.
*** TRK6~8: A-M6x1 TRK10~30: A-M6F TRK35~60: A-R1/8

flange Df mm	flange K mm	flange t mm	flange P.C.D. mm	flange X×Y×Z mm	grease fitting G mm	eccentricity μm	perpendicularity μm	basic load rating dynamic C N	basic load rating static Co N	allowable static moment Mo N・m	mass g	shaft diameter mm
32	25	5	24	3.5×6×3.1	20.5	20	20	323	530	8.2	58	6
40	30	6	29	4.5×7.5×4.1	29			431	784	16.0	117	8
43	34	6	33	4.5×7.5×4.1	38			588	1,100	27.0	189	10
46	35	6	36	4.5×7.5×4.1	41			813	1,570	40.1	228	12
48	37	6	38	4.5×7.5×4.1	45			813	1,570	42.9	286	13
54	42	8	43	5.5×9×5.1	51	25	25	1,230	2,350	73.5	376	16
62	50	8	51	5.5×9×5.1	59			1,400	2,740	98.0	714	20
74	58	10	60	6.6×11×6.1	82.5			1,560	3,140	157	1,163	25
82	64	10	67	6.6×11×6.1	91			2,490	5,490	297	1,543	30
96	75	13	78	9×14×8.1	100	30	30	2,650	6,270	373	2,400	35
101	80	13	83	9×14×8.1	115			3,430	8,040	553	2,510	40
129	100	18	107	11×17×11.1	145			6,080	15,900	1,370	6,400	50
144	116	18	122	11×17×11.1	155			7,550	20,000	1,800	9,200	60

1N≒0.102kgf 1N・m≒0.102kgf・m

www.bergab.ru Берг АБ bergab@ya.ru Тел. (495)-228-06-21, факс (495) 223-3071

www.bergab.ru Берг АБ bergab@ya.ru Тел. (495)-228-06-21, факс (495) 223-3071

TRFC TYPE

— Triple-Wide Intermediate Position Round Flange Type —

part number structure

example **TRFC 25 G UU - Q**

- TRFC type
- inner contact diameter (dr)
- retainer material
  blank: steel
  G: resin
- seals on both sides
- grease fitting
  blank: without
  Q: grease fitting

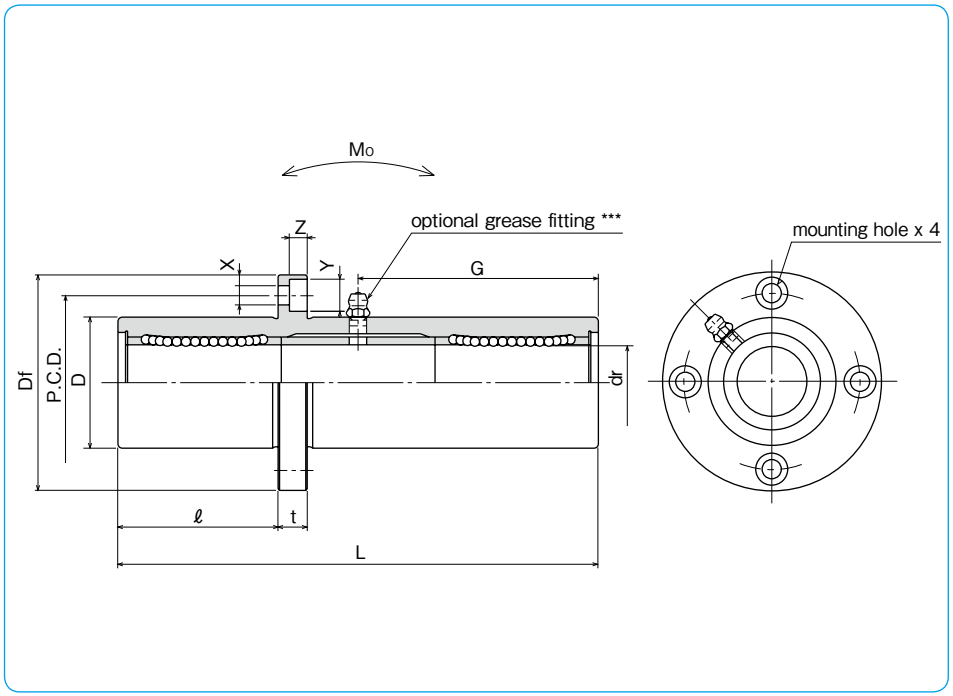

part number* steel retainer	part number* resin retainer	number of ball circuits	dr mm	dr tolerance μm	D mm	D tolerance μm	L ±0.3 mm
TRFC 6UU	TRFC 6GUU	4	6	0 −12	15	0/−18	51
TRFC 8UU	TRFC 8GUU	4	8		19	0 −21	66
TRFC10UU	TRFC10GUU	4	10		23		80
TRFC12UU	TRFC12GUU	4	12	0 −15	26		84
TRFC13UU	TRFC13GUU	4	13		28		90
TRFC16UU	TRFC16GUU	4	16		32	0 −25	103
TRFC20UU	TRFC20GUU	5	20	0 −18	40		118
TRFC25UU	TRFC25GUU	6	25		45		165
TRFC30UU	TRFC30GUU	6	30		52	0 −30	182
TRFC35UU	TRFC35GUU	6	35	0 −21	60		200
TRFC40UU	TRFC40GUU	6	40		65		230
TRFC50UU	TRFC50GUU	6	50		85	0 −35	290
TRFC60UU	TRFC60GUU	6	60	0/−25	100		310

* UU type is standard.
** Outer cylinder is treated with electroless nickel plating.
*** TRFC6~8: A-M6x1 TRFC10~30: A-M6F TRFC35~60: A-R1/8

flange ℓ mm	flange Df mm	flange t mm	flange P.C.D. mm	flange X×Y×Z mm	grease fitting G mm	eccentricity μm	perpendicularity μm	basic load rating dynamic C N	basic load rating static Co N	allowable static moment Mo N・m	mass g	shaft diameter mm
17	32	5	24	3.5×6×3.1	20.5	20	20	323	530	8.2	66	6
22	40	6	29	4.5×7.5×4.1	29			431	784	16.0	135	8
27	43	6	33	4.5×7.5×4.1	38			588	1,100	27.0	205	10
28	46	6	36	4.5×7.5×4.1	41			813	1,570	40.1	248	12
30	48	6	38	4.5×7.5×4.1	45			813	1,570	42.9	308	13
35	54	8	43	5.5×9×5.1	51	25	25	1,230	2,350	73.5	412	16
40	62	8	51	5.5×9×5.1	59			1,400	2,740	98.0	752	20
55	74	10	60	6.6×11×6.1	82.5			1,560	3,140	157	1,244	25
61	82	10	67	6.6×11×6.1	91			2,490	5,490	297	1,636	30
67	96	13	78	9×14×8.1	100	30	30	2,650	6,270	373	2,580	35
77	101	13	83	9×14×8.1	115			3,430	8,040	553	2,950	40
97	129	18	107	11×17×11.1	145			6,080	15,900	1,370	6,860	50
104	144	18	122	11×17×11.1	155			7,550	20,000	1,800	9,660	60

1N≒0.102kgf 1N・m≒0.102kgf・m

www.bergab.ru Берг АБ bergab@ya.ru Тел. (495)-228-06-21, факс (495) 223-3071

www.bergab.ru Берг АБ bergab@ya.ru Тел. (495)-228-06-21, факс (495) 223-3071

TRKC TYPE

— Triple-Wide Intermediate Position Square Flange Type —

part number structure

example **TRKC 25 G UU - Q**

- TRKC type
- inner contact diameter (dr)
- retainer material
  blank: steel
  G: resin
- seals on both sides
- grease fitting
  blank: without
  Q: grease fitting

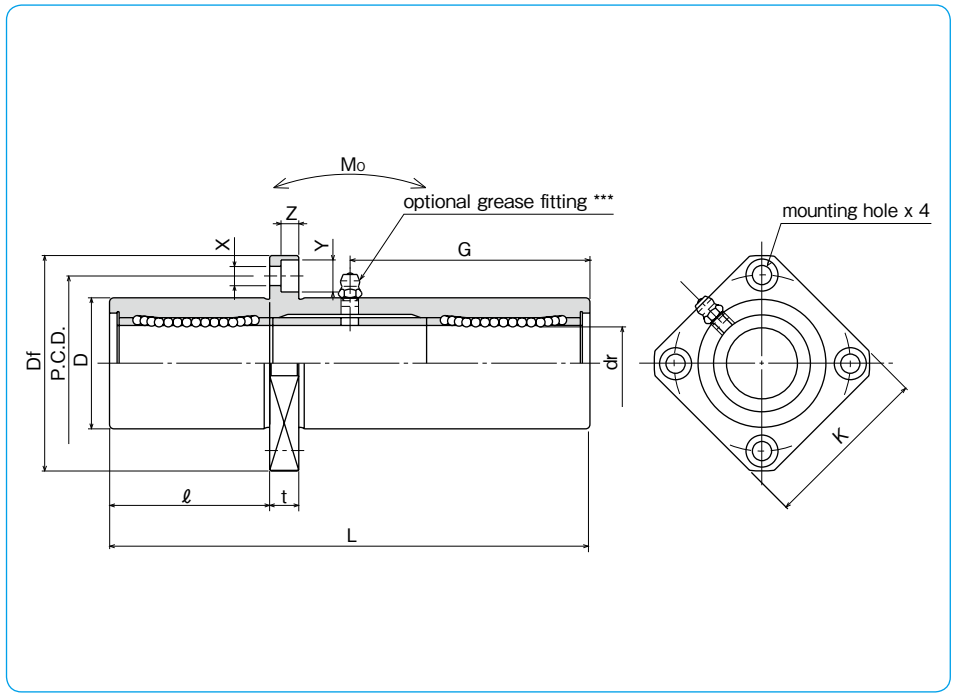

part number* steel retainer	part number* resin retainer	number of ball circuits	dr mm	dr tolerance μm	D mm	D tolerance μm	L ±0.3 mm
TRKC 6UU	TRKC 6GUU	4	6	0 −12	15	0/−18	51
TRKC 8UU	TRKC 8GUU	4	8		19	0 −21	66
TRKC10UU	TRKC10GUU	4	10		23		80
TRKC12UU	TRKC12GUU	4	12	0 −15	26		84
TRKC13UU	TRKC13GUU	4	13		28		90
TRKC16UU	TRKC16GUU	4	16		32	0 −25	103
TRKC20UU	TRKC20GUU	5	20	0 −18	40		118
TRKC25UU	TRKC25GUU	6	25		45		165
TRKC30UU	TRKC30GUU	6	30		52	0 −30	182
TRKC35UU	TRKC35GUU	6	35	0 −21	60		200
TRKC40UU	TRKC40GUU	6	40		65		230
TRKC50UU	TRKC50GUU	6	50		85	0 −35	290
TRKC60UU	TRKC60GUU	6	60	0/−25	100		310

* UU type is standard.
** Outer cylinder is treated with electroless nickel plating.
*** TRKC6~8: A-M6x1 TRKC10~30: A-M6F TRKC35~60: A-R1/8

flange ℓ mm	flange Df mm	flange K mm	flange t mm	flange P.C.D. mm	flange X×Y×Z mm	grease fitting G mm	eccentricity μm	perpendicularity μm	basic load rating dynamic C N	basic load rating static Co N	allowable static moment Mo N・m	mass g	shaft diameter mm
17	32	25	5	24	3.5×6×3.1	20.5	20	20	323	530	8.2	58	6
22	40	30	6	29	4.5×7.5×4.1	29			431	784	16.0	117	8
27	43	34	6	33	4.5×7.5×4.1	38			588	1,100	27.0	189	10
28	46	35	6	36	4.5×7.5×4.1	41			813	1,570	40.1	228	12
30	48	37	6	38	4.5×7.5×4.1	45			813	1,570	42.9	286	13
35	54	42	8	43	5.5×9×5.1	51	25	25	1,230	2,350	73.5	376	16
40	62	50	8	51	5.5×9×5.1	59			1,400	2,740	98.0	714	20
55	74	58	10	60	6.6×11×6.1	82.5			1,560	3,140	157	1,163	25
61	82	64	10	67	6.6×11×6.1	91			2,490	5,490	297	1,543	30
67	96	75	13	78	9×14×8.1	100	30	30	2,650	6,270	373	2,400	35
77	101	80	13	83	9×14×8.1	115			3,430	8,040	553	2,510	40
97	129	100	18	107	11×17×11.1	145			6,080	15,900	1,370	6,400	50
104	144	116	18	122	11×17×11.1	155			7,550	20,000	1,800	9,200	60

1N≒0.102kgf 1N・m≒0.102kgf・m

www.bergab.ru Берг АБ bergab@ya.ru Тел. (495)-228-06-21, факс (495) 223-3071

www.bergab.ru Берг АБ bergab@ya.ru Тел. (495)-228-06-21, факс (495) 223-3071

TRF-E TYPE

– Triple-Wide Round Flange Pilot End Type –

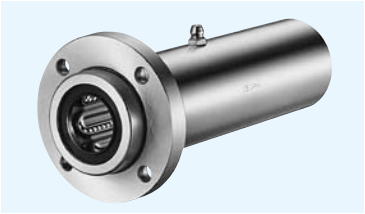

part number structure

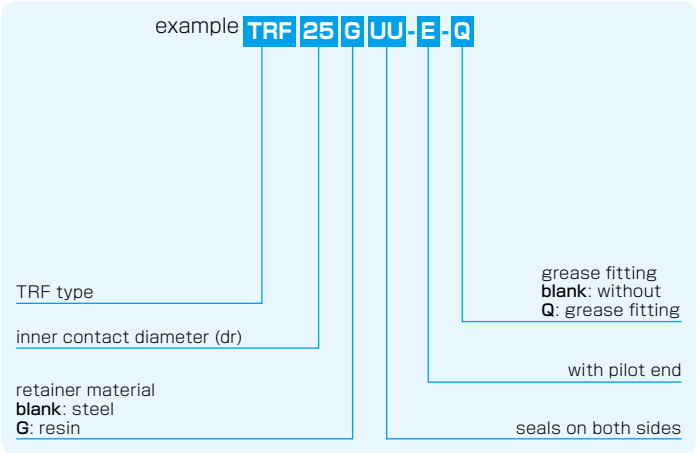

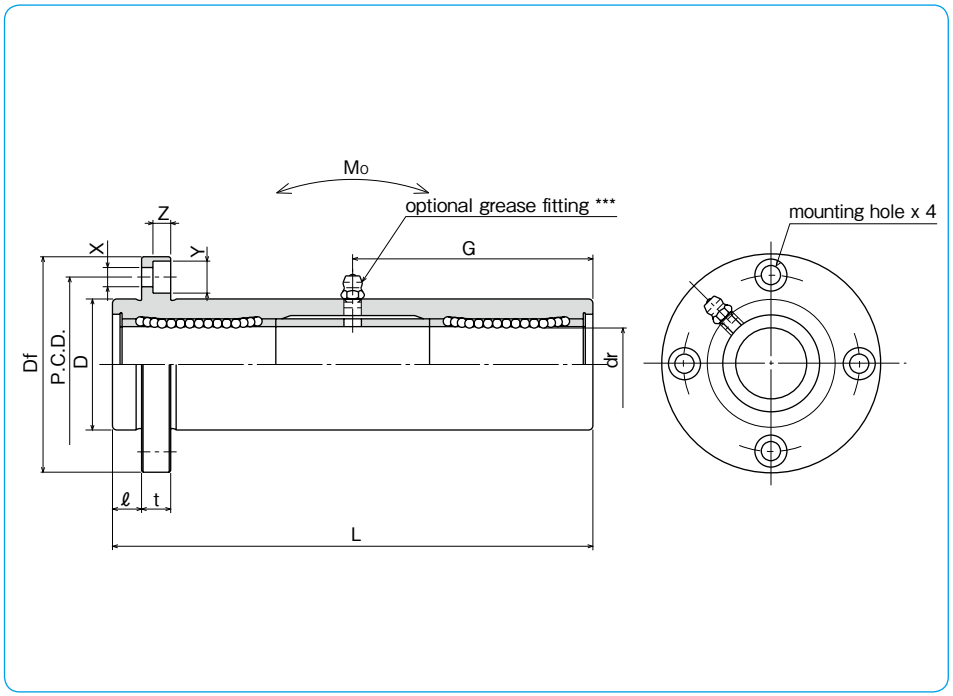

part number* steel retainer	part number* resin retainer	number of ball circuits	dr mm	dr tolerance μm	D mm	D tolerance μm	L ±0.3 mm
TRF 6UU-E	TRF 6GUU-E	4	6	0 −12	15	0/−18	51
TRF 8UU-E	TRF 8GUU-E	4	8		19	0 −21	66
TRF10UU-E	TRF10GUU-E	4	10		23		80
TRF12UU-E	TRF12GUU-E	4	12	0 −15	26		84
TRF13UU-E	TRF13GUU-E	4	13		28		90
TRF16UU-E	TRF16GUU-E	4	16		32	0 −25	103
TRF20UU-E	TRF20GUU-E	5	20	0 −18	40		118
TRF25UU-E	TRF25GUU-E	6	25		45		165
TRF30UU-E	TRF30GUU-E	6	30		52	0 −30	182
TRF35UU-E	TRF35GUU-E	6	35	0 −21	60		200
TRF40UU-E	TRF40GUU-E	6	40		65		230
TRF50UU-E	TRF50GUU-E	6	50		85	0 −35	290
TRF60UU-E	TRF60GUU-E	6	60	0/−25	100		310

* UU type is standard.
** Outer cylinder is treated with electroless nickel plating.
*** TRF6~8: A-M6x1 TRF10~30: A-M6F TRF35~60: A-R1/8

flange ℓ mm	flange Df mm	flange t mm	flange P.C.D. mm	flange X×Y×Z mm	grease fitting G mm	eccentricity μm	perpendicularity μm	basic load rating dynamic C N	basic load rating static Co N	allowable static moment Mo N・m	mass g	shaft diameter mm
5	32	5	24	3.5×6×3.1	20.5	20	20	323	530	8.2	66	6
6	40	6	29	4.5×7.5×4.1	29			431	784	16.0	135	8
6	43	6	33	4.5×7.5×4.1	38			588	1,100	27.0	205	10
6	46	6	36	4.5×7.5×4.1	41			813	1,570	40.1	248	12
6	48	6	38	4.5×7.5×4.1	45			813	1,570	42.9	308	13
8	54	8	43	5.5×9×5.1	51	25	25	1,230	2,350	73.5	412	16
8	62	8	51	5.5×9×5.1	59			1,400	2,740	98.0	752	20
10	74	10	60	6.6×11×6.1	82.5			1,560	3,140	157	1,244	25
10	82	10	67	6.6×11×6.1	91			2,490	5,490	297	1,636	30
13	96	13	78	9×14×8.1	100	30	30	2,650	6,270	373	2,580	35
13	101	13	83	9×14×8.1	115			3,430	8,040	553	2,950	40
18	129	18	107	11×17×11.1	145			6,080	15,900	1,370	6,860	50
18	144	18	122	11×17×11.1	155			7,550	20,000	1,800	9,660	60

1N≒0.102kgf 1N・m≒0.102kgf・m

www.bergab.ru Берг АБ bergab@ya.ru Тел. (495)-228-06-21, факс (495) 223-3071

www.bergab.ru Берг АБ bergab@ya.ru Тел. (495)-228-06-21, факс (495) 223-3071

TRK-E TYPE

– Triple-Wide Square Flange Pilot End Type –

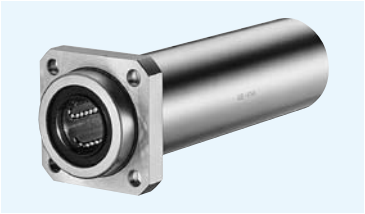

part number structure

example **TRK 25 G UU - E - Q**

- TRK type
- inner contact diameter (dr)
- retainer material
  blank: steel
  G: resin
- seals on both sides
- with pilot end
- grease fitting
  blank: without
  Q: grease fitting

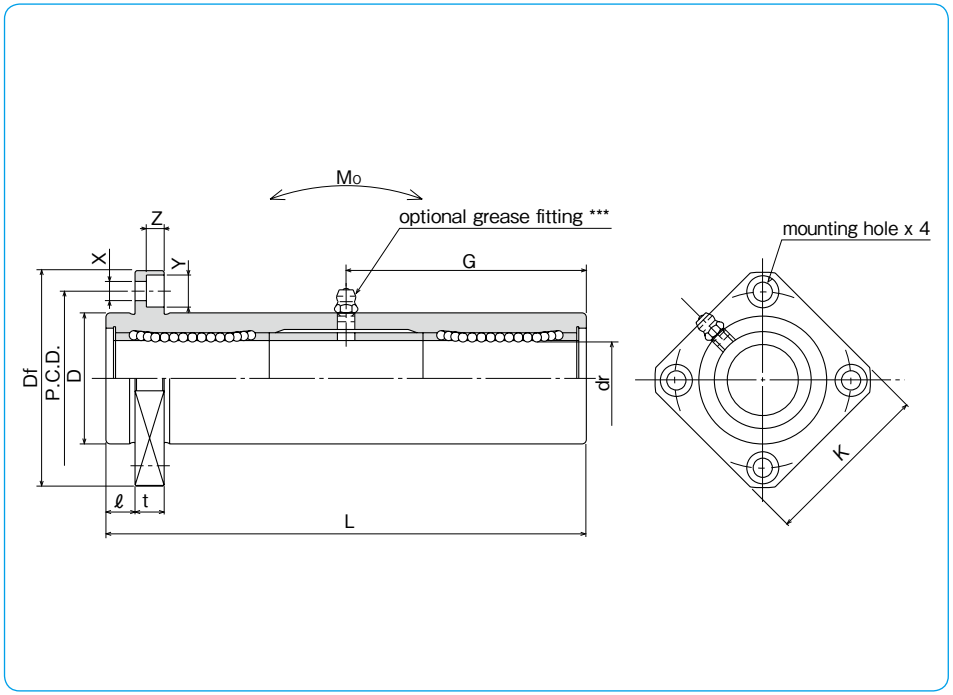

part number* steel retainer	part number* resin retainer	number of ball circuits	dr mm	dr tolerance μm	D mm	D tolerance μm	L ±0.3 mm
TRK 6UU-E	TRK 6GUU-E	4	6	0 −12	15	0/−18	51
TRK 8UU-E	TRK 8GUU-E	4	8		19	0 −21	66
TRK10UU-E	TRK10GUU-E	4	10		23		80
TRK12UU-E	TRK12GUU-E	4	12	0 −15	26		84
TRK13UU-E	TRK13GUU-E	4	13		28		90
TRK16UU-E	TRK16GUU-E	4	16		32	0 −25	103
TRK20UU-E	TRK20GUU-E	5	20	0 −18	40		118
TRK25UU-E	TRK25GUU-E	6	25		45		165
TRK30UU-E	TRK30GUU-E	6	30		52	0 −30	182
TRK35UU-E	TRK35GUU-E	6	35	0 −21	60		200
TRK40UU-E	TRK40GUU-E	6	40		65		230
TRK50UU-E	TRK50GUU-E	6	50		85	0 −35	290
TRK60UU-E	TRK60GUU-E	6	60	0/−25	100		310

* UU type is standard.
** Outer cylinder is treated with electroless nickel plating.
*** TRK6~8: A-M6x1 TRK10~30: A-M6F TRK35~60: A-R1/8

flange ℓ mm	flange Df mm	flange K mm	flange t mm	flange P.C.D. mm	flange X×Y×Z mm	grease fitting G mm	eccentricity μm	perpendicularity μm	basic load rating dynamic C N	basic load rating static Co N	allowable static moment Mo N・m	mass g	shaft diameter mm
5	32	25	5	24	3.5×6×3.1	20.5	20	20	323	530	8.2	58	6
6	40	30	6	29	4.5×7.5×4.1	29			431	784	16.0	117	8
6	43	34	6	33	4.5×7.5×4.1	38			588	1,100	27.0	189	10
6	46	35	6	36	4.5×7.5×4.1	41			813	1,570	40.1	228	12
6	48	37	6	38	4.5×7.5×4.1	45			813	1,570	42.9	286	13
8	54	42	8	43	5.5×9×5.1	51	25	25	1,230	2,350	73.5	376	16
8	62	50	8	51	5.5×9×5.1	59			1,400	2,740	98.0	714	20
10	74	58	10	60	6.6×11×6.1	82.5			1,560	3,140	157	1,163	25
10	82	64	10	67	6.6×11×6.1	91			2,490	5,490	297	1,543	30
13	96	75	13	78	9×14×8.1	100	30	30	2,650	6,270	373	2,400	35
13	101	80	13	83	9×14×8.1	115			3,430	8,040	553	2,510	40
18	129	100	18	107	11×17×11.1	145			6,080	15,900	1,370	6,400	50
18	144	116	18	122	11×17×11.1	155			7,550	20,000	1,800	9,200	60

1N≒0.102kgf 1N・m≒0.102kgf・m

www.bergab.ru Берг АБ bergab@ya.ru Тел. (495)-228-06-21, факс (495) 223-3071

www.bergab.ru Берг АБ bergab@ya.ru Тел. (495)-228-06-21, факс (495) 223-3071

GM TYPE
– Single Type –

part number structure

example **GM 25 UU**

- GM type
- inner contact diameter (dr)
- seal
  - **blank**: without seal
  - **UU**: seals on both sides

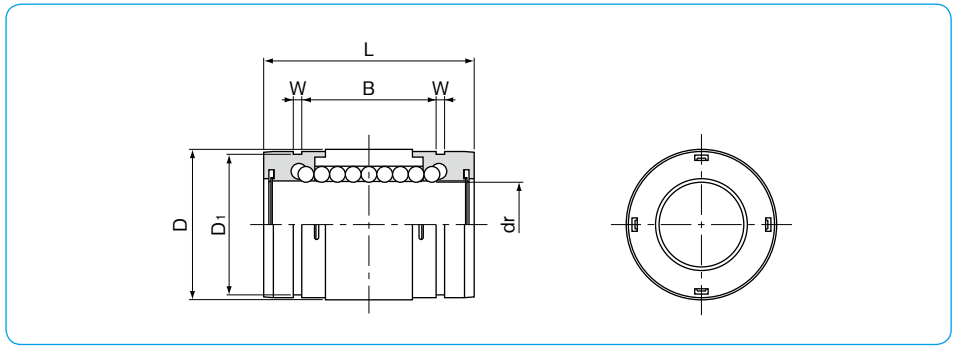

part number	number of ball circuits	dr mm	dr tolerance μm	D mm	D tolerance μm	L mm	B mm	W mm	D1 mm	basic load rating dynamic C N	basic load rating static Co N	mass g
GM 6	4	6	0 −9	12	0 −11	19	11.3	1.1	11.5	206	265	5
GM 8	4	8		15		24	15.3	1.1	14.3	274	392	10
GM10	4	10		19	0 −13	29	19.4	1.3	18	372	549	18
GM12	4	12		21		30	20.4	1.3	20	510	784	23
GM13	4	13		23		32	20.4	1.3	22	510	784	27
GM16	4	16		28		37	23.3	1.6	27	774	1,180	45
GM20	6	20	0 −10	32	0 −16	42	27.3	1.6	30.5	882	1,370	70
GM25	6	25		40		59	37.3	1.85	38	980	1,570	150
GM30	6	30		45		64	40.8	1.85	43	1,570	2,740	180

GM-AJ type (clearance adjustable type) is also manufactured. Please contact NB for details.

1N≒0.102kgf

GM-W TYPE
– Double-Wide Type –

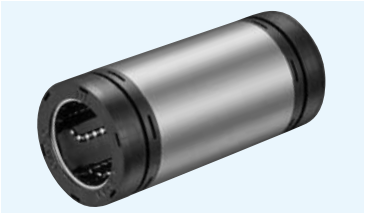

part number structure

example **GM 25 W UU**

- GM type
- inner contact diameter (dr)
- seals on both sides
- double-wide type

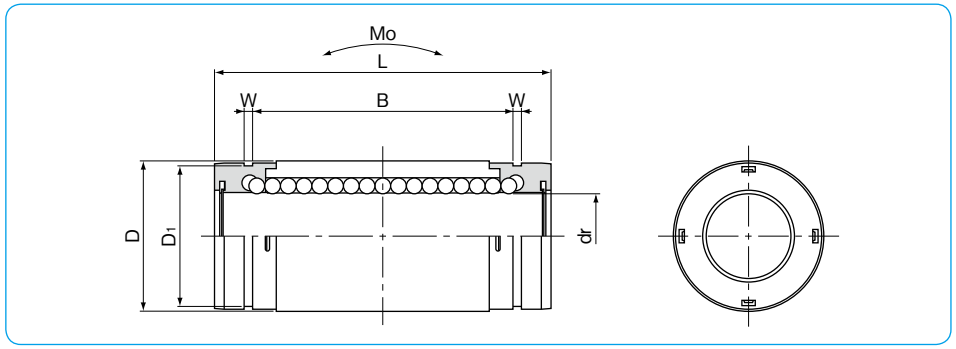

part number	number of ball circuits	dr mm	dr tolerance μm	D mm	D tolerance μm	L mm	B mm	W mm	D1 mm	basic load rating dynamic C N	basic load rating static Co N	allowable static moment Mo N・m	mass g
GM 6W UU	4	6	0 −10	12	0 −13	28	20.3	1.1	11.5	323	530	1.5	9
GM 8W UU	4	8		15		36	27.3	1.1	14.3	431	784	3.3	18
GM10W UU	4	10		19	0 −16	41	31.4	1.3	18	588	1,100	5.0	31
GM12W UU	4	12		21		46	36.4	1.3	20	813	1,570	7.6	42
GM13W UU	4	13		23		48	36.4	1.3	22	813	1,570	8.1	50
GM16W UU	4	16		28		53	39.3	1.6	27	1,230	2,350	13.8	76
GM20W UU	6	20	0 −12	32	0 −19	65	50.3	1.6	30.5	1,400	2,740	20.0	130
GM25W UU	6	25		40		91	69.3	1.85	38	1,560	3,140	34.8	280
GM30W UU	6	30		45		99	75.8	1.85	43	2,490	5,490	57.5	334

*UU type is standard.

1N≒0.102kgf 1N・m≒0.102kgf・m

www.bergab.ru Берг АБ bergab@ya.ru Тел. (495)-228-06-21, факс (495) 223-3071

www.bergab.ru Берг АБ bergab@ya.ru Тел. (495)-228-06-21, факс (495) 223-3071

GW TYPE (Inch Standard)

– Single Type –

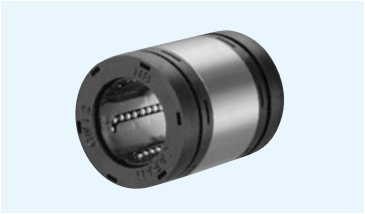

part number structure

example **GW 16 UU**

- GW type
- size
- seal
  - **blank**: without seal
  - **UU**: seals on both sides

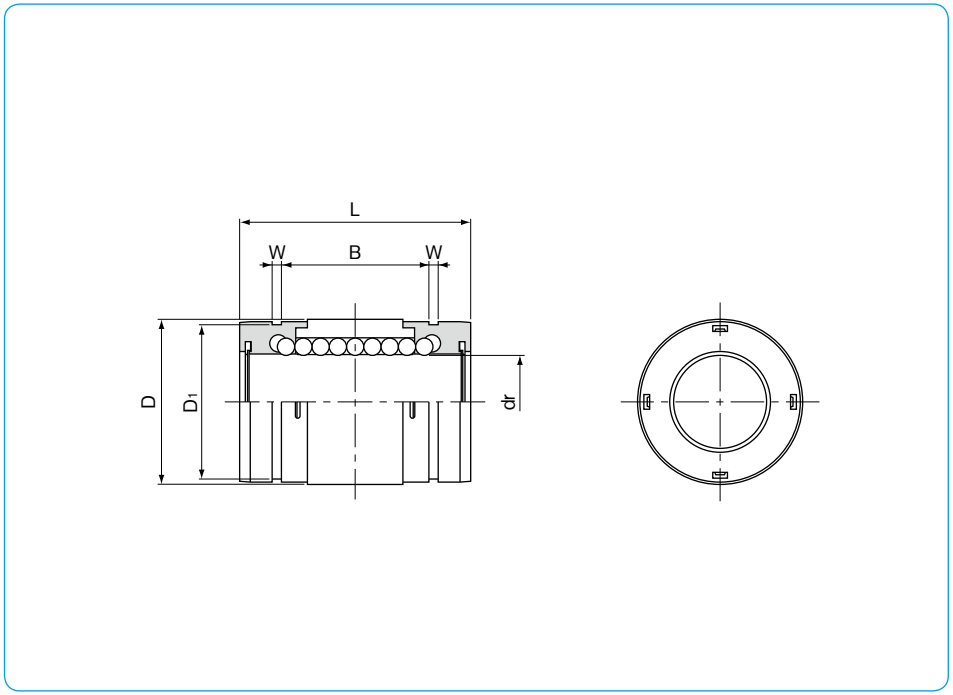

part number	number of ball circuits	dr inch/(mm)	dr tolerance inch/(μm)	D inch/(mm)	D tolerance inch/(μm)	major dimensions L inch/(mm)
GW 4	4	.2500 (6.350)	0 −.00040 (−10)	.5000 (12.700)	0 −.00045 (−11)	.7500 (19.050)
GW 6	4	3750 (9.525)		.6250 (15.875)	0 −.00050 (−13)	.8750 (22.225)
GW 8	4	.5000 (12.700)		.8750 (22.225)		1.2500 (31.750)
GW10	4	.6250 (15.875)		1.1250 (28.575)		1.5000 (38.100)
GW12	6	.7500 (19.050)		1.2500 (31.750)	0 −.00065 (−16)	1.6250 (41.275)
GW16	6	1.0000 (25.400)		1.5625 (39.688)		2.2500 (57.150)
GW20	6	1.2500 (31.750)	0 −.00050 (−12)	2.0000 (50.800)	0 −.00075 (−19)	2.6250 (66.675)

B inch/(mm)	W inch/(mm)	D1 inch/(mm)	basic load rating dynamic C N	basic load rating static Co N	mass g
.4329 (10.996)	.0390 (0.992)	.4687 (11.906)	206	265	5.4
.5577 (14.166)	.0390 (0.992)	.5880 (14.935)	225	314	7.8
.8710 (22.123)	.0459 (1.168)	.8209 (20.853)	510	784	26
.9920 (25.197)	.0559 (1.422)	1.0590 (26.899)	774	1,180	51
1.0538 (26.767)	.0559 (1.422)	1.1760 (29.870)	862	1,370	72
1.6187 (41.115)	.0679 (1.727)	1.4687 (37.306)	980	1,570	138
1.8687 (47.465)	.0679 (1.727)	1.8859 (47.904)	1,570	2,740	269

1N≒0.225lbf 1kg≒2.205lbs

www.bergab.ru Берг АБ bergab@ya.ru Тел. (495)-228-06-21, факс (495) 223-3071

www.bergab.ru Берг АБ bergab@ya.ru Тел. (495)-228-06-21, факс (495) 223-3071

GM TYPE
– Single Type –

part number structure

example **GM 25 UU**

- GM type
- inner contact diameter (dr)
- seal
  - **blank**: without seal
  - **UU**: seals on both sides

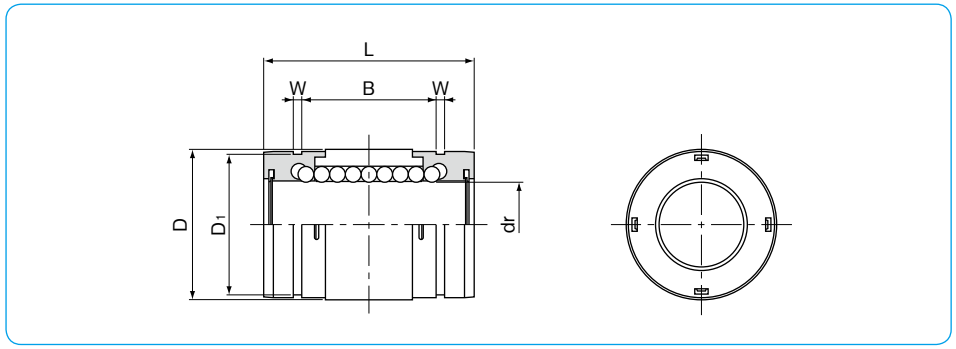

part number	number of ball circuits	dr mm	dr tolerance μm	D mm	D tolerance μm	L mm	B mm	W mm	D1 mm	basic load rating dynamic C N	basic load rating static Co N	mass g
GM 6	4	6	0 −9	12	0 −11	19	11.3	1.1	11.5	206	265	5
GM 8	4	8		15		24	15.3	1.1	14.3	274	392	10
GM10	4	10		19	0 −13	29	19.4	1.3	18	372	549	18
GM12	4	12		21		30	20.4	1.3	20	510	784	23
GM13	4	13		23		32	20.4	1.3	22	510	784	27
GM16	4	16		28		37	23.3	1.6	27	774	1,180	45
GM20	6	20	0 −10	32	0 −16	42	27.3	1.6	30.5	882	1,370	70
GM25	6	25		40		59	37.3	1.85	38	980	1,570	150
GM30	6	30		45		64	40.8	1.85	43	1,570	2,740	180

GM-AJ type (clearance adjustable type) is also manufactured. Please contact NB for details.

1N≒0.102kgf

GM-W TYPE
– Double-Wide Type –

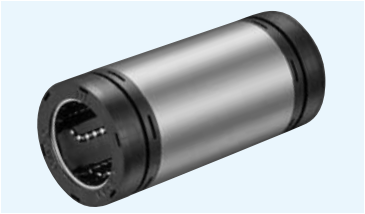

part number structure

example **GM 25 W UU**

- GM type
- inner contact diameter (dr)
- seals on both sides
- double-wide type

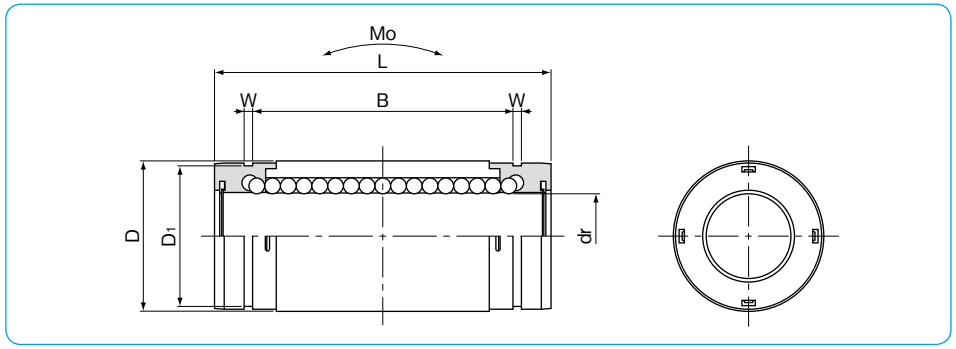

part number	number of ball circuits	dr mm	dr tolerance μm	D mm	D tolerance μm	L mm	B mm	W mm	D1 mm	basic load rating dynamic C N	basic load rating static Co N	allowable static moment Mo N・m	mass g
GM 6W UU	4	6	0 −10	12	0 −13	28	20.3	1.1	11.5	323	530	1.5	9
GM 8W UU	4	8		15		36	27.3	1.1	14.3	431	784	3.3	18
GM10W UU	4	10		19	0 −16	41	31.4	1.3	18	588	1,100	5.0	31
GM12W UU	4	12		21		46	36.4	1.3	20	813	1,570	7.6	42
GM13W UU	4	13		23		48	36.4	1.3	22	813	1,570	8.1	50
GM16W UU	4	16		28		53	39.3	1.6	27	1,230	2,350	13.8	76
GM20W UU	6	20	0 −12	32	0 −19	65	50.3	1.6	30.5	1,400	2,740	20.0	130
GM25W UU	6	25		40		91	69.3	1.85	38	1,560	3,140	34.8	280
GM30W UU	6	30		45		99	75.8	1.85	43	2,490	5,490	57.5	334

*UU type is standard.

1N≒0.102kgf 1N・m≒0.102kgf・m

www.bergab.ru Берг АБ bergab@ya.ru Тел. (495)-228-06-21, факс (495) 223-3071

www.bergab.ru Берг АБ bergab@ya.ru Тел. (495)-228-06-21, факс (495) 223-3071

GMF-W TYPE

— Round Flange Double-Wide Type —

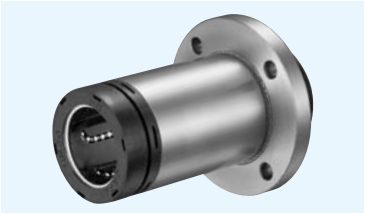

part number structure

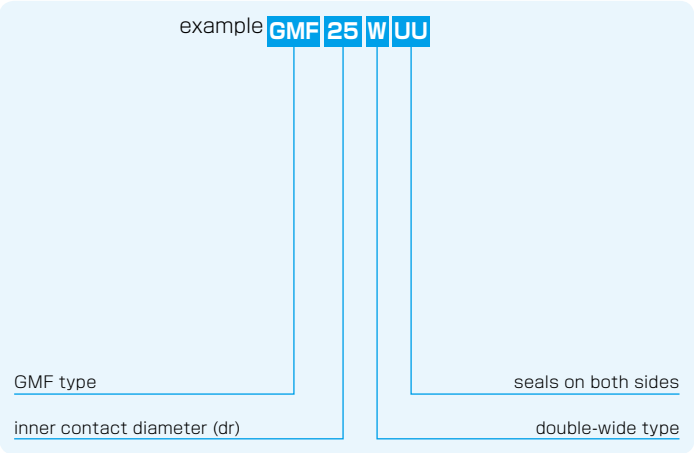

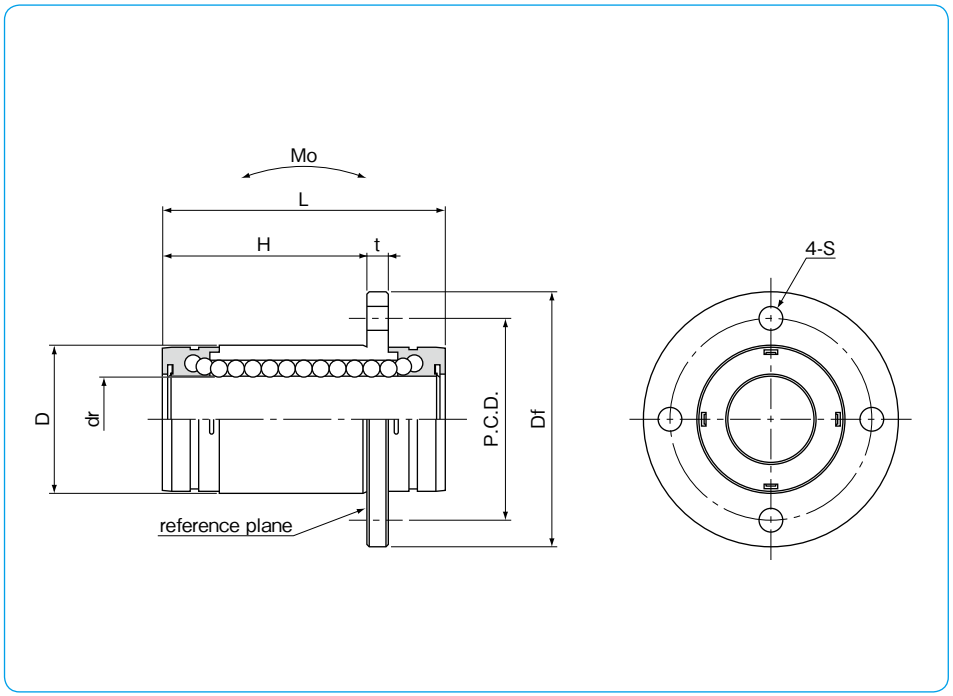

part number	number of ball circuits	dr mm	dr tolerance μm	D mm	D tolerance μm	L mm	H mm
						major dimensions	
GMF 6W UU	4	6	0 −10	12	0 −13	28	17.8
GMF 8W UU	4	8		15		36	25.1
GMF10W UU	4	10		19	0 −16	41	28.2
GMF12W UU	4	12		21		46	34.2
GMF13W UU	4	13		23		48	34.7
GMF16W UU	4	16		28		53	38.3
GMF20W UU	6	20	0 −12	32	0 −19	65	49.2
GMF25W UU	6	25		40		91	70.5
GMF30W UU	6	30		45		99	74.3

*UU type is standard.

flange Df mm	flange t mm	flange P.C.D. mm	flange S mm	perpendicularity μm	basic load rating dynamic C N	basic load rating static Co N	allowable static moment Mo N・m	mass g	shaft diameter mm
28	4	20	3.5	15	323	530	1.5	25	6
32	4	24	3.5		431	784	3.3	38	8
40	4	29	4.5		588	1,100	5.0	62	10
42	4	32	4.5		813	1,570	7.6	75	12
43	4	33	4.5		813	1,570	8.1	83	13
48	4	38	4.5		1,230	2,350	13.8	115	16
54	5	43	5.5	20	1,400	2,740	20.0	188	20
62	5	51	5.5		1,560	3,140	34.8	350	25
74	8	60	6.6		2,490	5,490	57.5	502	30

1N≒0.102kgf 1N・m≒0.102kgf・m

www.bergab.ru Берг АБ bergab@ya.ru Тел. (495)-228-06-21, факс (495) 223-3071

www.bergab.ru Берг АБ bergab@ya.ru Тел. (495)-228-06-21, факс (495) 223-3071

GMK-W TYPE

— Square Flange Double-Wide Type —

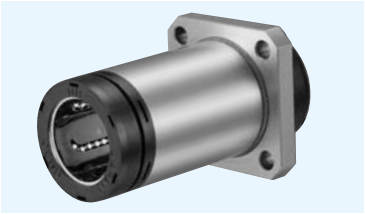

part number structure

example GMK 25 W UU

- GMK type
- inner contact diameter (dr)
- double-wide type
- seals on both sides

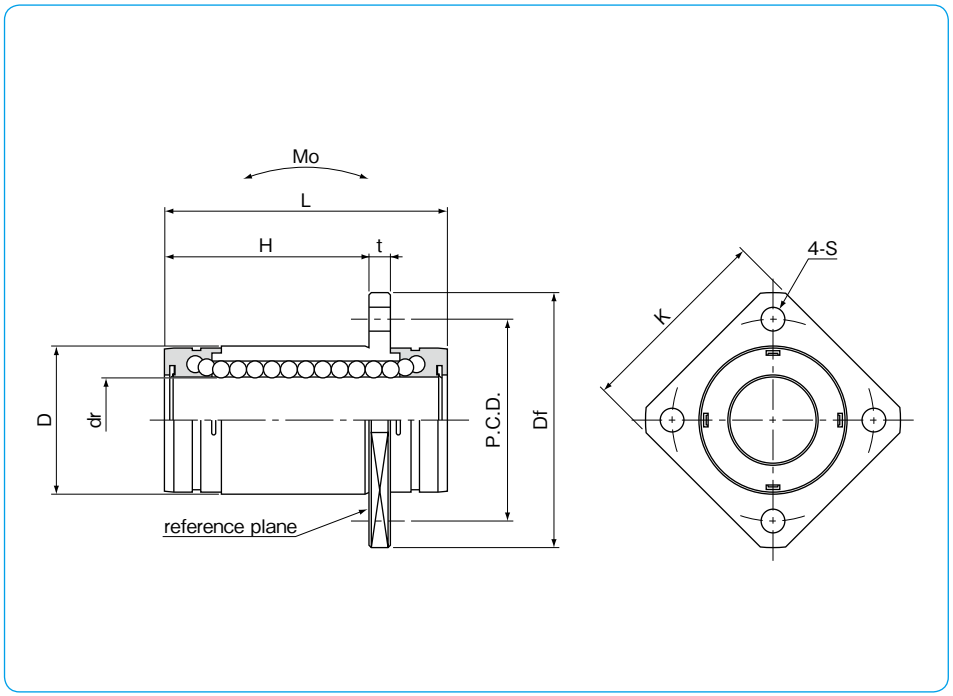

part number	number of ball circuits	dr mm	dr tolerance μm	D mm	D tolerance μm	L mm	H mm
GMK 6W UU	4	6	0 −10	12	0 −13	28	17.8
GMK 8W UU	4	8		15		36	25.1
GMK10W UU	4	10		19	0 −16	41	28.2
GMK12W UU	4	12		21		46	34.2
GMK13W UU	4	13		23		48	34.7
GMK16W UU	4	16		28		53	38.3
GMK20W UU	6	20	0 −12	32	0 −19	65	49.2
GMK25W UU	6	25		40		91	70.5
GMK30W UU	6	30		45		99	74.3

*UU type is standard.

major dimensions

Df mm	t mm	flange P.C.D. mm	K mm	S mm	perpendicularity μm	basic load rating dynamic C N	basic load rating static Co N	allowable static moment Mo N・m	mass g	shaft diameter mm
28	4	20	22	3.5	15	323	530	1.5	20	6
32	4	24	25	3.5		431	784	3.3	32	8
40	4	29	30	4.5		588	1,100	5.0	50	10
42	4	32	32	4.5		813	1,570	7.6	63	12
43	4	33	34	4.5		813	1,570	8.1	72	13
48	4	38	37	4.5		1,230	2,350	13.8	99	16
54	5	43	42	5.5	20	1,400	2,740	20.0	165	20
62	5	51	50	5.5		1,560	3,140	34.8	325	25
74	8	60	58	6.6		2,490	5,490	57.5	437	30

1N≒0.102kgf 1N・m≒0.102kgf・m

www.bergab.ru Берг АБ bergab@ya.ru Тел. (495)-228-06-21, факс (495) 223-3071

www.bergab.ru Берг АБ bergab@ya.ru Тел. (495)-228-06-21, факс (495) 223-3071

GMT-W TYPE

— Two Side Cut Double-Wide Flange Type —

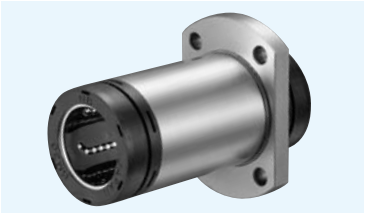

part number structure

example GMT 25 W UU

- GMT type
- inner contact diameter (dr)
- double-wide type
- seals on both sides

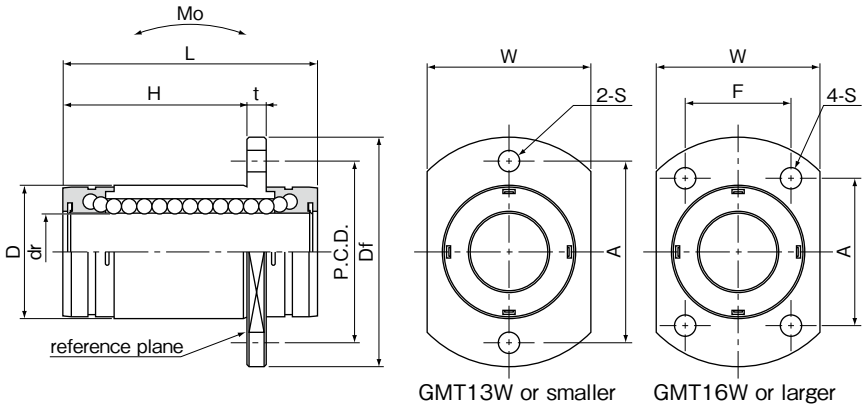

part number	number of ball circuits	dr mm	dr tolerance μm	D mm	D tolerance μm	L mm	H mm	Df mm	t mm	W mm	A mm	F mm	S mm	perpendicularity μm	basic load rating dynamic C N	basic load rating static Co N	allowable static moment Mo N・m	mass g	shaft diameter mm
GMT 6W UU	4	6	0 −10	12	0 −13	28	17.8	28	4	18	20	—	3.5	15	323	530	1.5	21	6
GMT 8W UU	4	8		15		36	25.1	32	4	21	24	—	3.5		431	784	3.3	33	8
GMT10W UU	4	10		19	0 −16	41	28.2	40	4	25	29	—	4.5		588	1,100	5.0	52	10
GMT12W UU	4	12		21		46	34.2	42	4	27	32	—	4.5		813	1,570	7.6	65	12
GMT13W UU	4	13		23		48	34.7	43	4	29	33	—	4.5		813	1,570	8.1	74	13
GMT16W UU	4	16		28		53	38.3	48	4	34	31	22	4.5		1,230	2,350	13.8	104	16
GMT20W UU	6	20	0 −12	32	0 −19	65	49.2	54	5	38	36	24	5.5	20	1,400	2,740	20.0	171	20
GMT25W UU	6	25		40		91	70.5	62	5	46	40	32	5.5		1,560	3,140	34.8	331	25
GMT30W UU	6	30		45		99	74.3	74	8	51	49	35	6.6		2,490	5,490	57.5	447	30

*UU type is standard.

1N≒0.102kgf 1N・m≒0.102kgf・m

www.bergab.ru Берг АБ bergab@ya.ru Тел. (495)-228-06-21, факс (495) 223-3071

www.bergab.ru Берг АБ bergab@ya.ru Тел. (495)-228-06-21, факс (495) 223-3071

GMF-W-E TYPE

— Round Flange Double-Wide Type with pilot end—

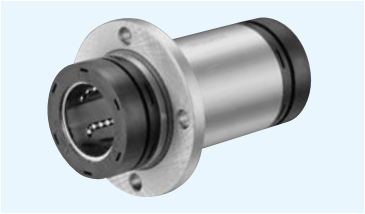

part number structure

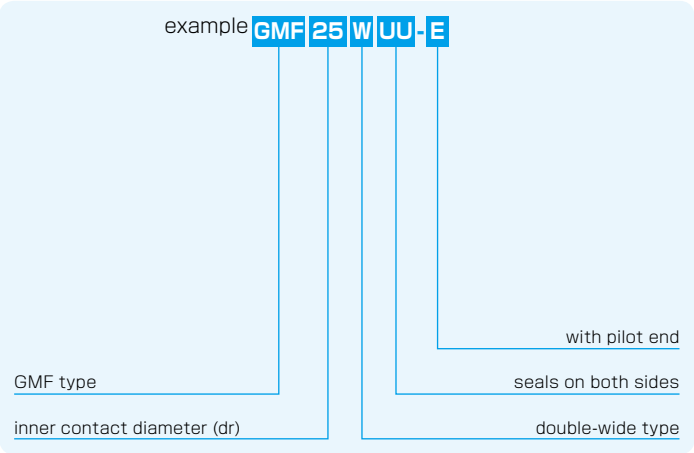

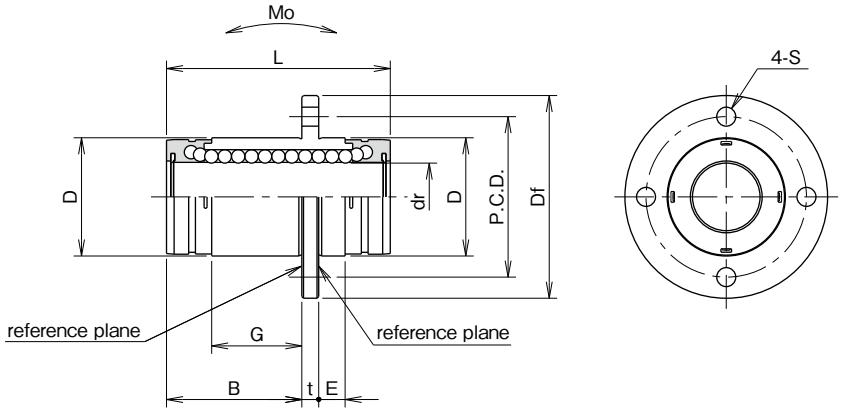

*Both sides of the flange can be used as a reference plane.

part number	number of ball circuits	dr mm	dr tolerance μm	D mm	D tolerance μm	L mm	B mm	G mm	E mm
		major dimensions							
GMF 6W UU-E	4	6	0 −10	12	0 −13	28	13.8	7.6	4
GMF 8W UU-E	4	8		15		36	21.1	14.2	4
GMF10W UU-E	4	10		19	0 −16	41	24.2	15.4	4
GMF12W UU-E	4	12		21		46	30.2	22.4	4
GMF13W UU-E	4	13		23		48	30.65	21.3	4
GMF16W UU-E	4	16		28		53	33.3	22.6	5
GMF20W UU-E	6	20	0 −12	32	0 −19	65	44.2	33.4	5
GMF25W UU-E	6	25		40		91	65.5	50.0	5
GMF30W UU-E	6	30		45		99	69.3	52.6	5

*UU type is standard.

flange Df mm	t mm	P.C.D. mm	S mm	perpendicularity μm	basic load rating dynamic C N	static Co N	allowable static moment Mo N・m	mass g	shaft diameter mm
28	4	20	3.5	15	323	530	1.5	25	6
32	4	24	3.5		431	784	3.3	38	8
40	4	29	4.5		588	1,100	5.0	62	10
42	4	32	4.5		813	1,570	7.6	75	12
43	4	33	4.5		813	1,570	8.1	83	13
48	4	38	4.5		1,230	2,350	13.8	115	16
54	5	43	5.5	20	1,400	2,740	20.0	188	20
62	5	51	5.5		1,560	3,140	34.8	350	25
74	8	60	6.6		2,490	5,490	57.5	502	30

1N≒0.102kgf 1N・m≒0.102kgf・m

www.bergab.ru Берг АБ bergab@ya.ru Тел. (495)-228-06-21, факс (495) 223-3071

www.bergab.ru Берг АБ bergab@ya.ru Тел. (495)-228-06-21, факс (495) 223-3071

GMK-W-E TYPE

— Square Flange Double-Wide Type with pilot end—

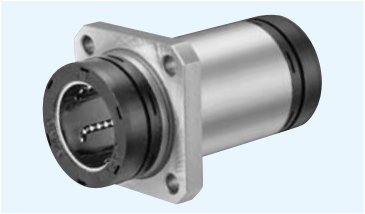

part number structure

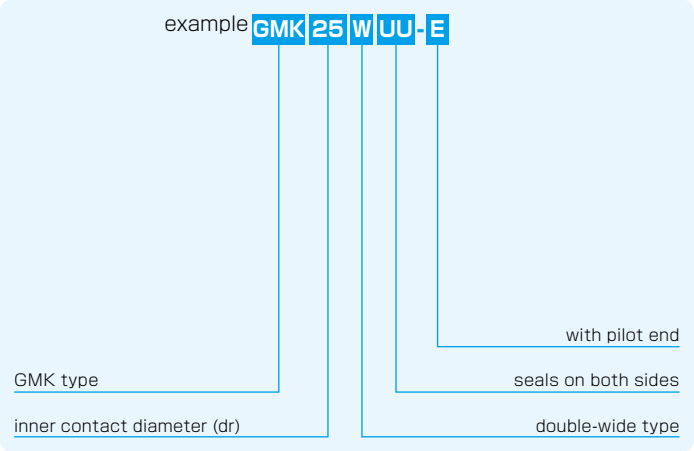

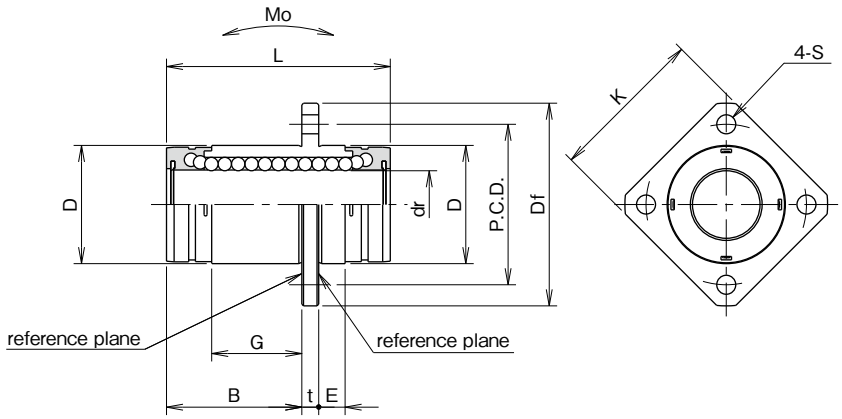

*Both sides of the flange can be used as a reference plane.

part number	number of ball circuits	dr mm	dr tolerance μm	D mm	D tolerance μm	L mm	B mm	G mm	E mm
GMK 6W UU-E	4	6	0 −10	12	0 −13	28	13.8	7.6	4
GMK 8W UU-E	4	8		15		36	21.1	14.2	4
GMK10W UU-E	4	10		19	0 −16	41	24.2	15.4	4
GMK12W UU-E	4	12		21		46	30.2	22.4	4
GMK13W UU-E	4	13		23		48	30.65	21.3	4
GMK16W UU-E	4	16		28		53	33.3	22.6	5
GMK20W UU-E	6	20	0 −12	32	0 −19	65	44.2	33.4	5
GMK25W UU-E	6	25		40		91	65.5	50.0	5
GMK30W UU-E	6	30		45		99	69.3	52.6	5

*UU type is standard.

Df mm	t mm	flange P.C.D. mm	K mm	S mm	perpendicularity μm	basic load rating dynamic C N	static Co N	allowable static moment Mo N・m	mass g	shaft diameter mm
28	4	20	22	3.5	15	323	530	1.5	20	6
32	4	24	25	3.5		431	784	3.3	32	8
40	4	29	30	4.5		588	1,100	5.0	50	10
42	4	32	32	4.5		813	1,570	7.6	63	12
43	4	33	34	4.5		813	1,570	8.1	72	13
48	4	38	37	4.5		1,230	2,350	13.8	99	16
54	5	43	42	5.5	20	1,400	2,740	20.0	165	20
62	5	51	50	5.5		1,560	3,140	34.8	325	25
74	8	60	58	6.6		2,490	5,490	57.5	437	30

1N≒0.102kgf 1N・m≒0.102kgf・m

www.bergab.ru Берг АБ bergab@ya.ru Тел. (495)-228-06-21, факс (495) 223-3071

www.bergab.ru Берг АБ bergab@ya.ru Тел. (495)-228-06-21, факс (495) 223-3071

GMT-W-E TYPE

— Two Side Cut Double-Wide Flange Type with pilot end—

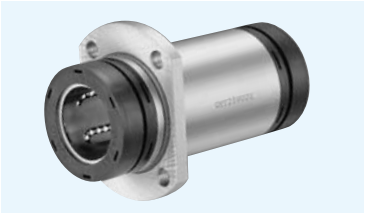

part number structure

example **GMT 25 W UU-E**

- GMT type
- inner contact diameter (dr)
- double-wide type
- seals on both sides
- with pilot end

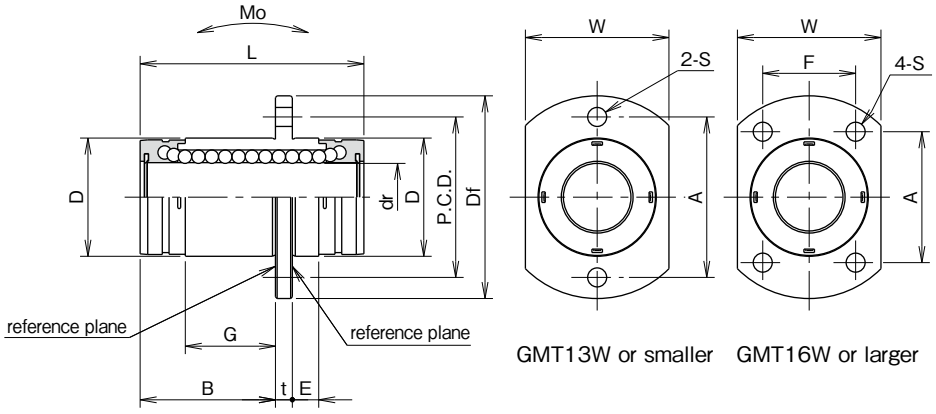

*Both sides of the flange can be used as a reference plane.

part number	number of ball circuits	dr mm	dr tolerance μm	D mm	D tolerance μm	L mm	B mm	G mm	E mm
						major dimensions			
GMT 6W UU-E	4	6	0 −10	12	0 −13	28	13.8	7.6	4
GMT 8W UU-E	4	8		15		36	21.1	14.2	4
GMT10W UU-E	4	10		19	0 −16	41	24.2	15.4	4
GMT12W UU-E	4	12		21		46	30.2	22.4	4
GMT13W UU-E	4	13		23		48	30.65	21.3	4
GMT16W UU-E	4	16		28		53	33.3	22.6	5
GMT20W UU-E	6	20	0 −12	32	0 −19	65	44.2	33.4	5
GMT25W UU-E	6	25		40		91	65.5	50.0	5
GMT30W UU-E	6	30		45		99	69.3	52.6	5

*UU type is standard.

flange Df mm	t mm	W mm	A mm	F mm	S mm	perpendicularity μm	basic load rating dynamic C N	static Co N	allowable static moment Mo N・m	mass g	shaft diameter mm
28	4	18	20	—	3.5	15	323	530	1.5	21	6
32	4	21	24	—	3.5		431	784	3.3	33	8
40	4	25	29	—	4.5		588	1,100	5.0	52	10
42	4	27	32	—	4.5		813	1,570	7.6	65	12
43	4	29	33	—	4.5		813	1,570	8.1	74	13
48	4	34	31	22	4.5		1,230	2,350	13.8	104	16
54	5	38	36	24	5.5	20	1,400	2,740	20.0	171	20
62	5	46	40	32	5.5		1,560	3,140	34.8	331	25
74	8	51	49	35	6.6		2,490	5,490	57.5	447	30

1N≒0.102kgf 1N・m≒0.102kgf・m

www.bergab.ru Берг АБ bergab@ya.ru Тел. (495)-228-06-21, факс (495) 223-3071

www.bergab.ru Берг АБ bergab@ya.ru Тел. (495)-228-06-21, факс (495) 223-3071

SMA TYPE

– Block Type –

part number structure

example **SMSA 25 G UU**

specification
SMA: standard
SMSA: anti-corrosion

inner contact diameter

retainer material
blank: standard/steel
anti-corrosion/stainless steel
G: resin

seal
blank: without seal
UU: seals on both sides

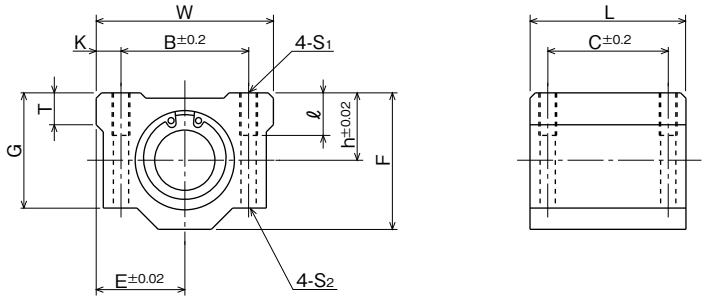

part number	inner contact diameter mm	tolerance μm	h mm	E mm	W mm	L mm	F mm	G mm	T mm
			outer dimensions					major dimensions	
SMA 3GUU	3	0 / −8	5	8	16	13	10	8	–
SMA 4GUU	4		5.5	8.5	17	15	11	9	–
SMA 5GUU	5		7	11	22	18	14	11	–
SMA 6GUU	6	0 / −9	9	15	30	25	18	15	6
SMA 8GUU	8		11	17	34	30	22	18	6
SMA10GUU	10		13	20	40	35	26	21	8
SMA12GUU	12		15	21	42	36	28	24	8
SMA13GUU	13		15	22	44	39	30	24.5	8
SMA16GUU	16		19	25	50	44	38.5	32.5	9
SMA20GUU	20	0 / −10	21	27	54	50	41	35	11
SMA25GUU	25		26	38	76	67	51.5	42	12
SMA30GUU	30		30	39	78	72	59.5	49	15
SMA35GUU	35	0 / −12	34	45	90	80	68	54	18
SMA40GUU	40		40	51	102	90	78	62	20
SMA50GUU	50		52	61	122	110	102	80	25
SMA60GUU	60	0/−15	58	66	132	122	114	94	30

part number	B mm	C mm	K mm	S_1	ℓ mm	S_2 mm	basic load rating dynamic C N	static Co N	※ mass g	shaft diameter mm
	mounting dimensions									
SMA 3GUU	11	8	2.5	M2	–	–	69	105	5	3
SMA 4GUU	12	10	2.5	M3	–	–	88	127	7	4
SMA 5GUU	16	12	3	M3	–	–	167	206	14	5
SMA 6GUU	20	15	5	M4	8	3.4	206	265	34	6
SMA 8GUU	24	18	5	M4	8	3.4	274	392	52	8
SMA10GUU	28	21	6	M5	12	4.3	372	549	92	10
SMA12GUU	30.5	26	5.75	M5	12	4.3	510	784	102	12
SMA13GUU	33	26	5.5	M5	12	4.3	510	784	120	13
SMA16GUU	36	34	7	M5	12	4.3	774	1,180	200	16
SMA20GUU	40	40	7	M6	12	5.2	882	1,370	255	20
SMA25GUU	54	50	11	M8	18	7	980	1,570	600	25
SMA30GUU	58	58	10	M8	18	7	1,570	2,740	735	30
SMA35GUU	70	60	10	M8	18	7	1,670	3,140	1,100	35
SMA40GUU	80	60	11	M10	25	8.7	2,160	4,020	1,590	40
SMA50GUU	100	80	11	M10	25	8.7	3,820	7,940	3,340	50
SMA60GUU	108	90	12	M12	25	10.7	4,700	10,000	4,270	60

* Mass of resin retainer type

1N≒0.102kgf

www.bergab.ru Берг АБ bergab@ya.ru Тел. (495)-228-06-21, факс (495) 223-3071

www.bergab.ru Берг АБ bergab@ya.ru Тел. (495)-228-06-21, факс (495) 223-3071

SMA-W TYPE

– Double-Wide Block Type –

part number structure

example **SMSA 25 G W UU**

- **SMSA**: specification — **SMA**: standard; **SMSA**: anti-corrosion
- **25**: inner contact diameter
- **G**: retainer material — **blank**: standard/steel; anti-corrosion/stainless steel; **G**: resin
- **W**: double-wide type
- **UU**: seal — **blank**: without seal; **UU**: seals on both sides

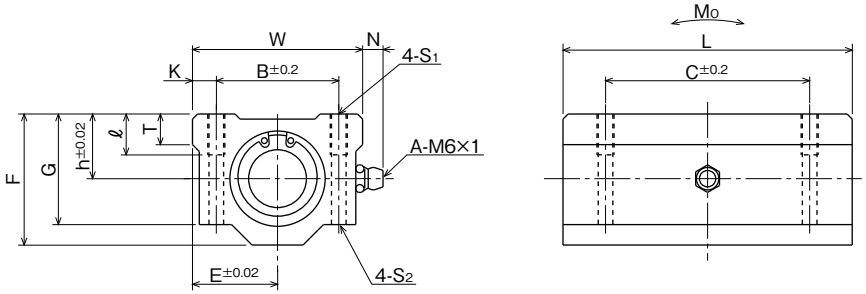

part number	inner contact diameter mm	tolerance μm	h mm	E mm	W mm	L mm	F mm	G mm	T mm	N mm
			outer dimensions						major dimensions	
SMA 3GWUU	3	0 −8	5	8	16	23	10	8	–	–
SMA 4GWUU	4		5.5	8.5	17	27	11	9	–	–
SMA 5GWUU	5		7	11	22	33	14	11	–	–
SMA 6GWUU	6	0 −9	9	15	30	48	18	15	6	7
SMA 8GWUU	8		11	17	34	58	22	18	6	7
SMA10GWUU	10		13	20	40	68	26	21	8	7
SMA12GWUU	12		15	21	42	70	28	24	8	6.5
SMA13GWUU	13		15	22	44	75	30	24.5	8	6.5
SMA16GWUU	16		19	25	50	85	38.5	32.5	9	6
SMA20GWUU	20	0 −10	21	27	54	96	41	35	11	7
SMA25GWUU	25		26	38	76	130	51.5	42	12	4
SMA30GWUU	30		30	39	78	140	59.5	49	15	5
SMA35GWUU	35	0 −12	34	45	90	155	68	54	18	5.5
SMA40GWUU	40		40	51	102	175	78	62	20	5
SMA50GWUU	50		52	61	122	215	102	80	25	5
SMA60GWUU	60	0/−15	58	66	132	240	114	94	30	5

B mm	C mm	K mm	S_1	ℓ mm	S_2 mm	basic load rating dynamic C N	static Co N	allowable static moment Mo N・m	※ mass g	shaft diameter mm
mounting dimensions										
11	16	2.5	M2	–	–	108	206	0.49	10	3
12	20	2.5	M3	–	–	137	255	0.72	13	4
16	25	3	M3	–	–	265	412	1.54	27	5
20	36	5	M4	8	3.4	323	530	2.18	63	6
24	42	5	M4	8	3.4	431	784	4.31	102	8
28	46	6	M5	12	4.3	588	1,100	7.24	180	10
30.5	50	5.75	M5	12	4.3	813	1,570	10.9	205	12
33	50	5.5	M5	12	4.3	813	1,570	11.6	240	13
36	60	7	M5	12	4.3	1,230	2,350	19.7	400	16
40	70	7	M6	12	5.2	1,400	2,740	26.8	570	20
54	100	11	M8	18	7	1,560	3,140	43.4	1,200	25
58	110	10	M8	18	7	2,490	5,490	82.8	1,480	30
70	120	10	M8	18	7	2,650	6,270	110	2,200	35
80	140	11	M10	25	8.7	3,430	8,040	147	3,200	40
100	160	11	M10	25	8.7	6,080	15,900	397	6,700	50
108	180	12	M12	25	10.7	7,550	20,000	530	8,560	60

* Mass of resin retainer type

1N≒0.102kgf 1N・m≒0.102kgf・m

www.bergab.ru Берг АБ bergab@ya.ru Тел. (495)-228-06-21, факс (495) 223-3071

www.bergab.ru Берг АБ bergab@ya.ru Тел. (495)-228-06-21, факс (495) 223-3071

AK TYPE

– Compact Block Type –

part number structure

example **AKS 25 G UU**

specification
AK: standard
AKS: anti-corrosion

inner contact diameter

retainer material
blank: standard/steel
anti-corrosion/stainless steel
G: resin

seal
blank: without seal
UU: seals on both sides

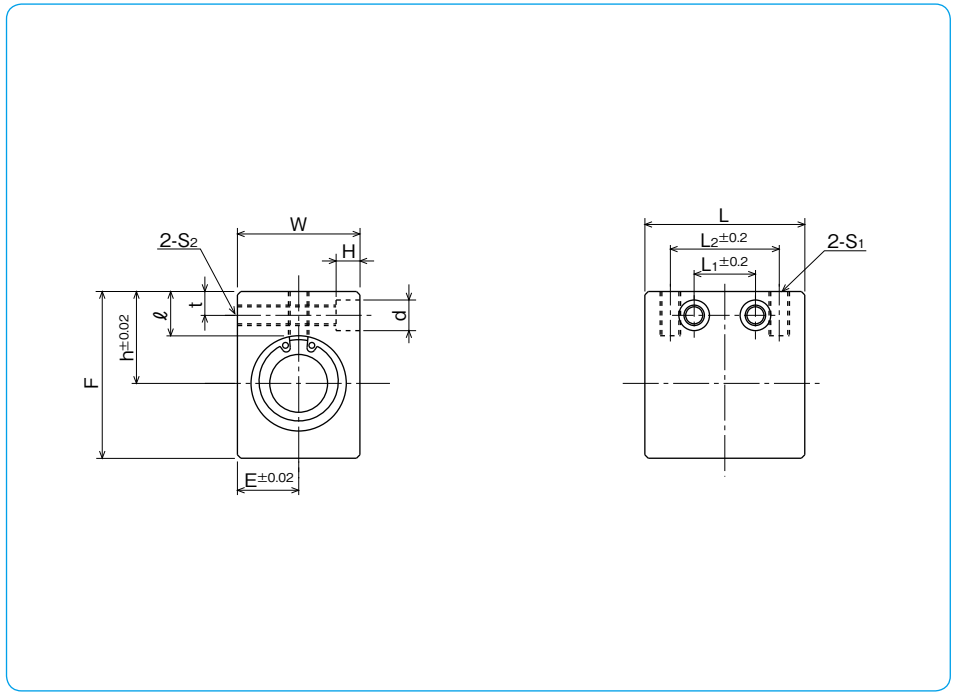

part number	inner contact diameter mm	tolerance μm	h mm	E mm	W mm	L mm	F mm	L2 mm	S1
			outer dimensions				major dimensions		
AK 6GUU	6	0 −9	14	8	16	27	22	18	M4
AK 8GUU	8		16	10	20	32	26	20	M5
AK10GUU	10		19	13	26	39	32	27	M6
AK12GUU	12		20	14	28	40	34	27	M6
AK13GUU	13		25	15	30	42	43	28	M6
AK16GUU	16		27	18	36	47	49	32	M6
AK20GUU	20	0 −10	31	21	42	52	54	36	M8
AK25GUU	25		37	26	52	69	65	42	M10
AK30GUU	30		40	29	58	74	71	44	M10

mounting dimensions ℓ mm	L1 mm	t mm	S2	d mm	H mm	basic load rating dynamic C N	static Co N	※ mass g	shaft diameter mm
8	9	5	M4	6	5	206	265	21.5	6
8.5	10	5	M4	6	5	274	392	40	8
9.5	15	6	M5	8	6	372	549	80	10
9.5	15	6	M5	8	6	510	784	90	12
13.5	16	7	M6	9	7	510	784	132	13
13	18	7	M6	9	7	774	1,180	204	16
15	18	8	M8	11	8	882	1,370	272	20
17	22	9	M10	14	10	980	1,570	574	25
17.5	22	9	M10	14	10	1,570	2,740	710	30

* Mass of resin retainer type

1N≒0.102kgf

www.bergab.ru Берг АБ bergab@ya.ru Тел. (495)-228-06-21, факс (495) 223-3071

www.bergab.ru Берг АБ bergab@ya.ru Тел. (495)-228-06-21, факс (495) 223-3071

AK-W TYPE

— Double-Wide Compact Block Type —

part number structure

example **AKS 25 G W UU**

- **AKS**: specification
  - **AK**: standard
  - **AKS**: anti-corrosion
- **25**: inner contact diameter
- **G**: retainer material
  - **blank**: standard/steel
  - anti-corrosion/stainless steel
  - **G**: resin
- **W**: double-wide type
- **UU**: seal
  - **blank**: without seal
  - **UU**: seals on both sides

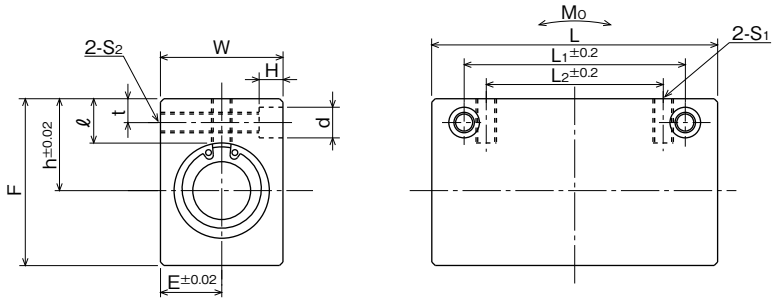

part number	inner contact diameter mm	tolerance μm	h mm	E mm	W mm	L mm	F mm	L2 mm	S1
			outer dimensions				major dimensions		
AK 6GWUU	6	0 −9	14	8	16	46	22	20	M4
AK 8GWUU	8		16	10	20	56	26	30	M5
AK10GWUU	10		19	13	26	68	32	36	M6
AK12GWUU	12		20	14	28	70	34	36	M6
AK13GWUU	13		25	15	30	74	43	42	M6
AK16GWUU	16		27	18	36	84	49	52	M6
AK20GWUU	20	0 −10	31	21	42	94	54	58	M8
AK25GWUU	25		37	26	52	128	65	80	M10
AK30GWUU	30		40	29	58	138	71	90	M10

mounting dimensions ℓ mm	L1 mm	t mm	S2	d mm	H mm	basic load rating dynamic C N	static Co N	allowable static moment Mo N・m	※ mass g	shaft diameter mm
8	30	5	M4	6	5	323	530	2.18	40	6
8.5	42	5	M4	6	5	431	784	4.31	75	8
9.5	50	6	M5	8	6	588	1,100	7.24	150	10
9.5	50	6	M5	8	6	813	1,570	10.9	168	12
13.5	55	7	M6	9	7	813	1,570	11.6	248	13
13	65	7	M6	9	7	1,230	2,350	19.7	383	16
15	70	8	M8	11	8	1,400	2,740	26.8	520	20
17	100	9	M10	14	10	1,560	3,140	43.4	1,120	25
17.5	110	9	M10	14	10	2,490	5,490	82.8	1,384	30

* Mass of resin retainer type

1N≒0.102kgf 1N・m≒0.102kgf・m

www.bergab.ru Берг АБ bergab@ya.ru Тел. (495)-228-06-21, факс (495) 223-3071

www.bergab.ru Берг АБ bergab@ya.ru Тел. (495)-228-06-21, факс (495) 223-3071

SMB TYPE

– Block Type –

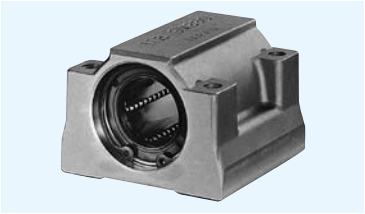

part number structure

example **SMSB 25 G UU**

specification
SMB: standard
SMSB: anti-corrosion

inner contact diameter

retainer material
blank: standard/steel
anti-corrosion/stainless steel
G: resin

seal
blank: without seal
UU: seals on both sides

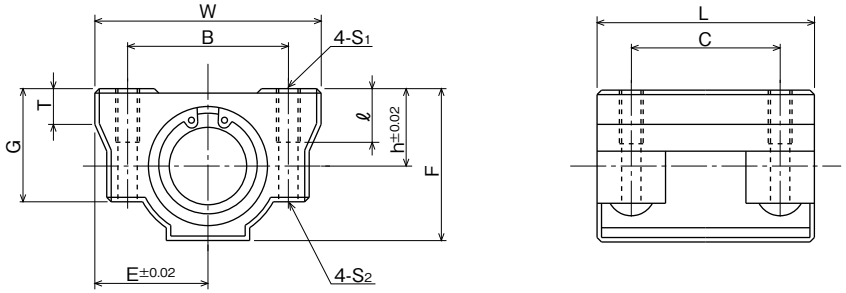

part number	inner contact diameter		major dimensions						
			outer dimensions						
		tolerance	h	E	W	L	F	G	T
	mm	μm	mm	mm	mm	mm	mm	mm	mm
SMB13GUU	13	0	16	22	44	39	31	22	8
SMB16GUU	16	− 9	19	25	50	49	37	28	9
SMB20GUU	20	0	21	27	54	55	41	31	11
SMB25GUU	25	−10	26	38	76	73	51	38	12
SMB30GUU	30		30	39	78	80	57	45	15
SMB40GUU	40	0/−12	40	51	102	96	75	59	22

mounting dimensions					basic load rating		※	shaft
					dynamic	static	mass	diameter
B	C	S_1	ℓ	S_2	C	Co		
mm	mm		mm	mm	N	N	g	mm
33	26	M5	10	4.3	510	784	120	13
36	34	M5	12	4.3	774	1,180	170	16
40	40	M6	12	5.1	882	1,370	210	20
54	50	M8	18	6.8	980	1,570	500	25
58	58	M8	18	6.8	1,570	2,740	600	30
80	60	M10	25	8.6	2,160	4,020	1,200	40

* Mass of resin retainer type

1N≒0.102kgf

www.bergab.ru Берг АБ bergab@ya.ru Тел. (495)-228-06-21, факс (495) 223-3071

www.bergab.ru Берг АБ bergab@ya.ru Тел. (495)-228-06-21, факс (495) 223-3071

SMP TYPE

— Pillow Block Type —

part number structure

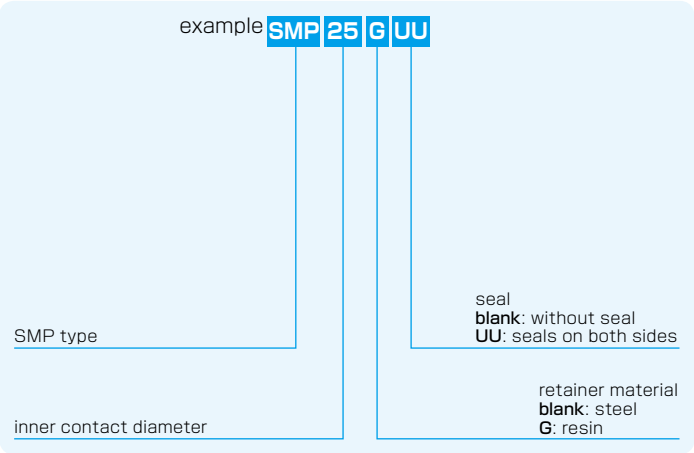

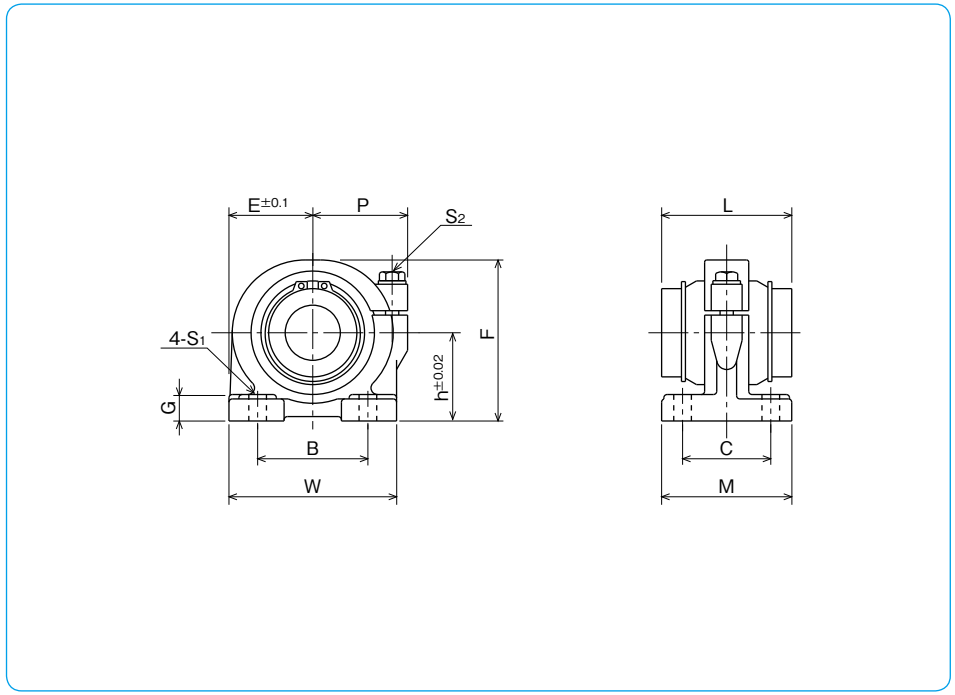

part number	inner contact diameter		outer dimensions					major dimensions	
		tolerance	h	E	W	L	F	G	M
	mm	μm	mm	mm	mm	mm	mm	mm	mm
SMP13GUU	13	0	25	25	50	32	46	8	36
SMP16GUU	16	−9	29	27.5	55	37	53	10	40
SMP20GUU	20	0	34	32.5	65	42	62	12	48
SMP25GUU	25	−10	40	38	76	59	73	12	59
SMP30GUU	30		45	42.5	85	64	84	15	69
SMP35GUU	35	0	50	49	98	70	94	15	76
SMP40GUU	40	−12	60	62	124	80	112	18	86
SMP50GUU	50		70	72	144	100	134	20	105
SMP60GUU	60	0/−15	82	84.5	169	110	154	23	115

mounting dimensions				adjustment screw size	basic load rating		※	shaft diameter
					dynamic	static	mass	
P	B	C	S1	S2	C	Co		
mm	mm	mm	mm		N	N	g	mm
30	30	26	7 (M5)	M5	510	784	270	13
32	35	29	7 (M5)	M5	774	1,180	380	16
37	40	35	8 (M6)	M6	882	1,370	680	20
43	50	40	8 (M6)	M6	980	1,570	1,000	25
49	58	46	10 (M8)	M8	1,570	2,740	1,400	30
58	62	53	12 (M10)	M10	1,670	3,140	2,100	35
68	76	64	12 (M10)	M10	2,160	4,020	3,700	40
80	100	70	14 (M12)	M12	3,820	7,940	6,100	50
88	115	80	14 (M12)	M12	4,700	10,000	8,700	60

* Mass of resin retainer type

1N≒0.102kgf

www.bergab.ru Берг АБ bergab@ya.ru Тел. (495)-228-06-21, факс (495) 223-3071

www.bergab.ru Берг АБ bergab@ya.ru Тел. (495)-228-06-21, факс (495) 223-3071

SMJ TYPE

– Clearance Adjustable Type –

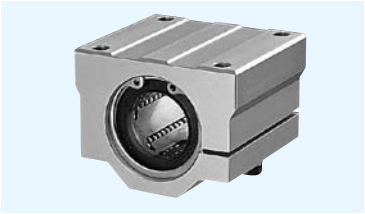

part number structure

example **SMSJ 25 G UU**

- **SMSJ**: specification
  - **SMJ**: standard
  - **SMSJ**: anti-corrosion
- **25**: inner contact diameter
- **G**: retainer material
  - **blank**: standard/steel*
  - anti-corrosion/stainless steel*
  - **G**: resin
- **UU**: seal
  - **blank**: without seal
  - **UU**: seals on both sides

*Size 10 is provided with resin retainer type only.

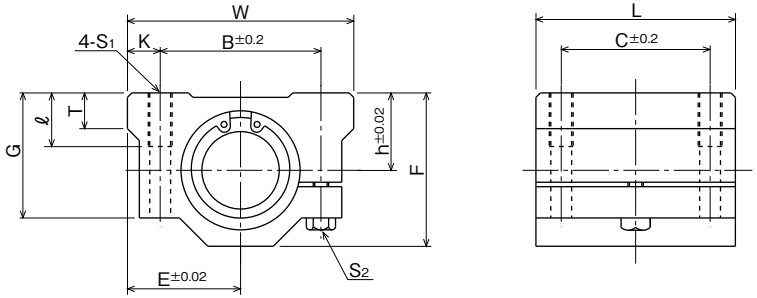

part number	inner contact diameter mm	outer dimensions h mm	E mm	W mm	L mm	F mm	G mm	major dimensions T mm	B mm
SMJ10GUU	10	13	20	40	35	26	21	8	28
SMJ12GUU	12	15	21	42	36	28	24	8	30.5
SMJ13GUU	13	15	22	44	39	30	24.5	8	33
SMJ16GUU	16	19	25	50	44	38.5	32.5	9	36
SMJ20GUU	20	21	27	54	50	41	35	11	40
SMJ25GUU	25	26	38	76	67	51.5	42	12	54
SMJ30GUU	30	30	39	78	72	59.5	49	15	58
SMJ35GUU	35	34	45	90	80	68	54	18	70
SMJ40GUU	40	40	51	102	90	78	62	20	80
SMJ50GUU	50	52	61	122	110	102	80	25	100
SMJ60GUU	60	58	66	132	122	114	94	30	108

mounting dimensions C mm	K mm	S_1	ℓ mm	adjustment screw size S_2	basic load rating dynamic C N	static Co N	※ mass g	shaft diameter mm
21	6	M5	12	M4	372	549	92	10
26	5.75	M5	12	M4	510	784	102	12
26	5.5	M5	12	M4	510	784	120	13
34	7	M5	12	M4	774	1,180	200	16
40	7	M6	12	M5	882	1,370	255	20
50	11	M8	18	M6	980	1,570	600	25
58	10	M8	18	M6	1,570	2,740	735	30
60	10	M8	18	M6	1,670	3,140	1,100	35
60	11	M10	25	M8	2,160	4,020	1,590	40
80	11	M10	25	M8	3,820	7,940	3,340	50
90	12	M12	25	M10	4,700	10,000	4,270	60

* Mass of resin retainer type

1N≒0.102kgf

www.bergab.ru Берг АБ bergab@ya.ru Тел. (495)-228-06-21, факс (495) 223-3071

www.bergab.ru Берг АБ bergab@ya.ru Тел. (495)-228-06-21, факс (495) 223-3071

SME TYPE
– Open Block Type –

part number structure

example **SMSE 25 G UU**

- **SMSE**: specification
  - **SME**: standard
  - **SMSE**: anti-corrosion
- **25**: inner contact diameter
- **G**: retainer material
  - **blank**: standard/steel*
  - anti-corrosion/stainless steel*
  - **G**: resin
- **UU**: seal
  - **blank**: without seal
  - **UU**: seals on both sides

*Size 10 is provided with resin retainer type only.

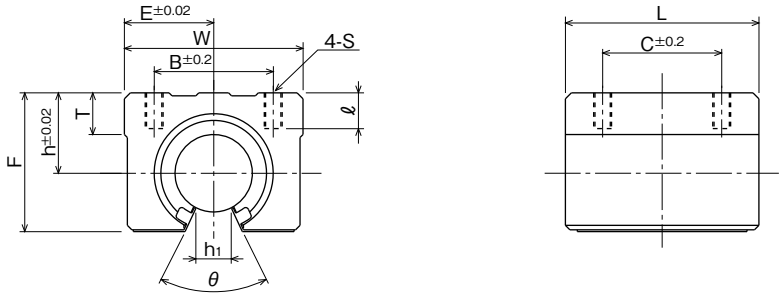

part number	inner contact diametermm	outer dimensions h mm	E mm	W mm	L mm	F mm	T mm	major dimensions h1 mm	θ
SME10GUU	10	15	18	36	32	24	7	6	80°
SME13GUU	13	17	20	40	39	28	8	8.5	80°
SME16GUU	16	20	22.5	45	45	33	9	10	80°
SME20GUU	20	23	24	48	50	39	11	10	60°
SME25GUU	25	27	30	60	65	47	14	11.5	50°
SME30GUU	30	33	35	70	70	56	15	14	50°
SME35GUU	35	37	40	80	80	63	18	16	50°
SME40GUU	40	42	45	90	90	72	20	19	50°
SME50GUU	50	53	60	120	110	92	25	23	50°

mounting dimensions B mm	C mm	S	ℓ mm	basic load rating dynamic C N	static Co N	※ mass g	shaft diameter mm
25	20	M5	10	372	549	65	10
28	26	M5	10	510	784	100	13
32	30	M5	12	774	1,180	150	16
35	35	M6	12	882	1,370	200	20
40	40	M6	12	980	1,570	450	25
50	50	M8	18	1,570	2,740	630	30
55	55	M8	18	1,670	3,140	925	35
65	65	M10	20	2,160	4,020	1,330	40
94	80	M10	20	3,820	7,940	3,000	50

* Mass of resin retainer type

1N≒0.102kgf

www.bergab.ru Берг АБ bergab@ya.ru Тел. (495)-228-06-21, факс (495) 223-3071

www.bergab.ru Берг АБ bergab@ya.ru Тел. (495)-228-06-21, факс (495) 223-3071

SME-W TYPE

– Double-wide Open Block Type –

part number structure

example **SMSE 25 G W UU**

- **SMSE**: specification
  - **SME**: standard
  - **SMSE**: anti-corrosion
- **25**: inner contact diameter
- **G**: retainer material
  - **blank**: standard/steel*
  - anti-corrosion/stainless steel*
  - **G**: resin
- **W**: double-wide type
- **UU**: seal
  - **blank**: without seal
  - **UU**: seals on both sides

*Size 10 is provided with resin retainer type only.

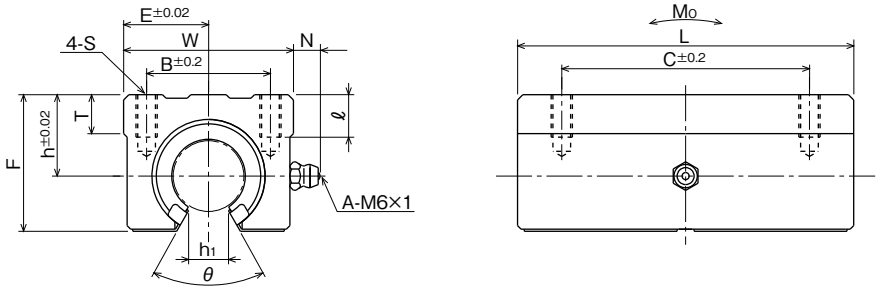

part number	inner contact diameter mm	outer dimensions h mm	E mm	W mm	L mm	F mm	T mm	N mm	major dimensions h_1 mm	θ
SME10GWUU	10	15	18	36	65	24	7	7.5	6	80°
SME13GWUU	13	17	20	40	75	28	8	7.5	8.5	80°
SME16GWUU	16	20	22.5	45	85	33	9	7.5	10	80°
SME20GWUU	20	23	24	48	95	39	11	7.5	10	60°
SME25GWUU	25	27	30	60	130	47	14	7.5	11.5	50°
SME30GWUU	30	33	35	70	140	56	15	7.5	14	50°

mounting dimensions B mm	C mm	S	ℓ mm	basic load rating dynamic C N	static Co N	allowable static moment Mo N・m	※ mass g	shaft diameter mm
25	40	M5	10	588	1,100	4.63	140	10
28	50	M5	10	813	1,570	7.42	200	13
32	60	M5	12	1,230	2,350	12.6	300	16
35	70	M6	12	1,400	2,740	14.5	400	20
40	90	M6	12	1,560	3,140	24.7	900	25
50	100	M8	18	2,490	5,490	47.2	1,260	30

* Mass of resin retainer type

1N≒0.102kgf 1N・m≒0.102kgf・m

www.bergab.ru Берг АБ bergab@ya.ru Тел. (495)-228-06-21, факс (495) 223-3071

www.bergab.ru Берг АБ bergab@ya.ru Тел. (495)-228-06-21, факс (495) 223-3071

SMD TYPE

— Open Block with Clearance Adjustable Type —

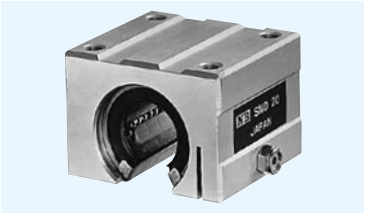

part number structure

example **SMSD 25 G UU**

- **SMSD**: specification
  - **SMD**: standard
  - **SMSD**: anti-corrosion
- **25**: inner contact diameter
- **G**: retainer material
  - **blank**: standard/steel
  - anti-corrosion/stainless steel
  - **G**: resin
- **UU**: seal
  - **blank**: without seal
  - **UU**: seals on both sides

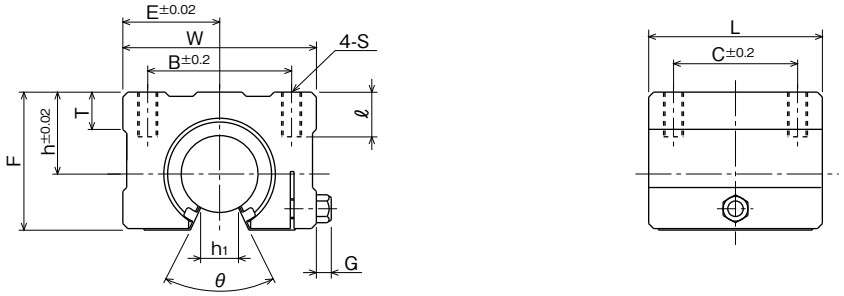

part number	inner contact diameter mm	outer dimensions h mm	E mm	W mm	L mm	F mm	T mm	G mm	major dimensions h1 mm	θ
SMD16GUU	16	20	25	50	45	33	9	6	10	80°
SMD20GUU	20	23	27	54	50	39	11	7	10	60°
SMD25GUU	25	27	38	76	65	47	14	7	11.5	50°
SMD30GUU	30	33	39	78	70	56	15	7	14	50°

mounting dimensions B mm	C mm	S	ℓ mm	basic load rating dynamic C N	static Co N	※ mass g	shaft diameter mm
36	30	M5	12	774	1,180	170	16
40	35	M6	12	882	1,370	240	20
54	40	M6	12	980	1,570	580	25
58	50	M8	18	1,570	2,740	720	30

* Mass of resin retainer type

1N≒0.102kgf

www.bergab.ru Берг АБ bergab@ya.ru Тел. (495)-228-06-21, факс (495) 223-3071

www.bergab.ru Берг АБ bergab@ya.ru Тел. (495)-228-06-21, факс (495) 223-3071

RB TYPE

– Resin Block Type –

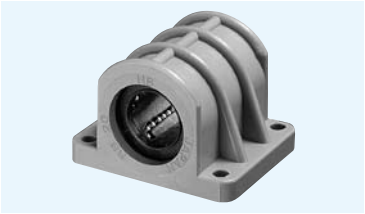

part number structure

example RB 20

RB type

inner contact diameter

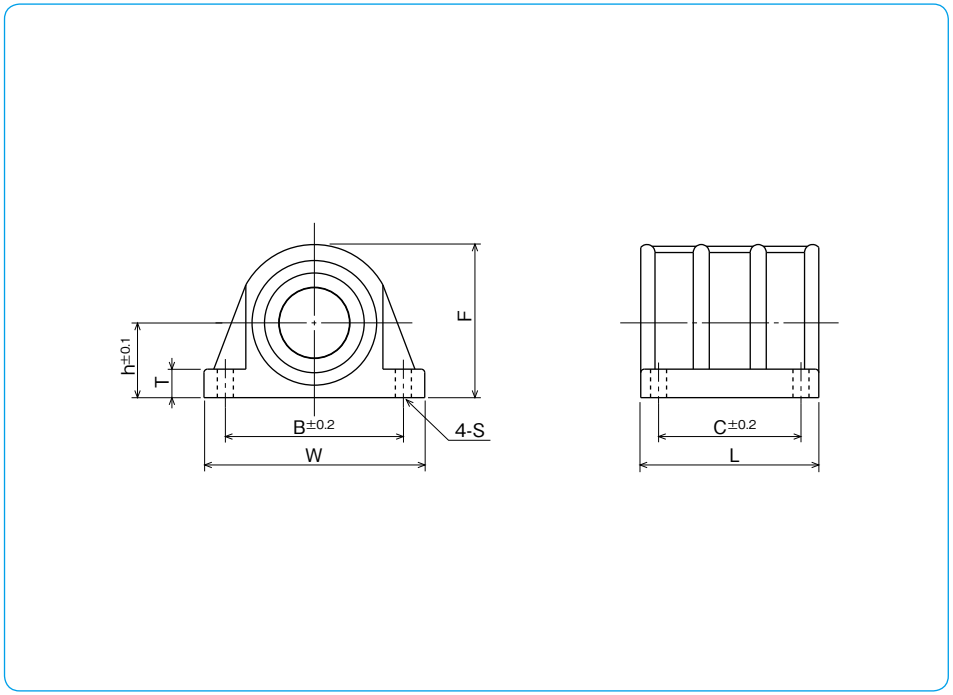

part number	inner contact diameter		major dimensions outer dimensions				mounting dimensions				basic load rating		mass	shaft diameter
		tolerance	h	W	L	F	T	B	C	S	dynamic C	static Co		
	mm	μm	mm	mm	mm	mm	mm	mm	mm	mm	N	N	g	mm
RB10	10	0 −9	13	45	35	26.5	6	35	21	4.5	372	549	43	10
RB12	12		15	50	36	30	6.5	40	26	4.5	510	784	50	12
RB13	13		15	50	39	31	6.5	40	26	4.5	510	784	63	13
RB16	16		19	56	44	38.5	7	46	34	4.5	774	1,180	99	16
RB20	20	0/−10	21	62	50	43	8	50	40	5.5	882	1,370	127	20

RB has seals as standard.

1N≒0.102kgf

www.bergab.ru Берг АБ bergab@ya.ru Тел. (495)-228-06-21, факс (495) 223-3071

www.bergab.ru Берг АБ bergab@ya.ru Тел. (495)-228-06-21, факс (495) 223-3071

RBW TYPE

(Inch Standard ／Anti-Corrosion Type)

— Resin Block Type —

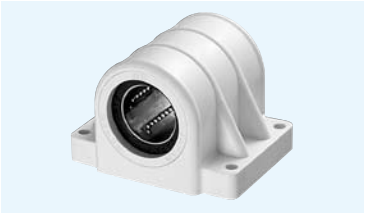

part number structure

example **RBW** **16**

RBW type — size

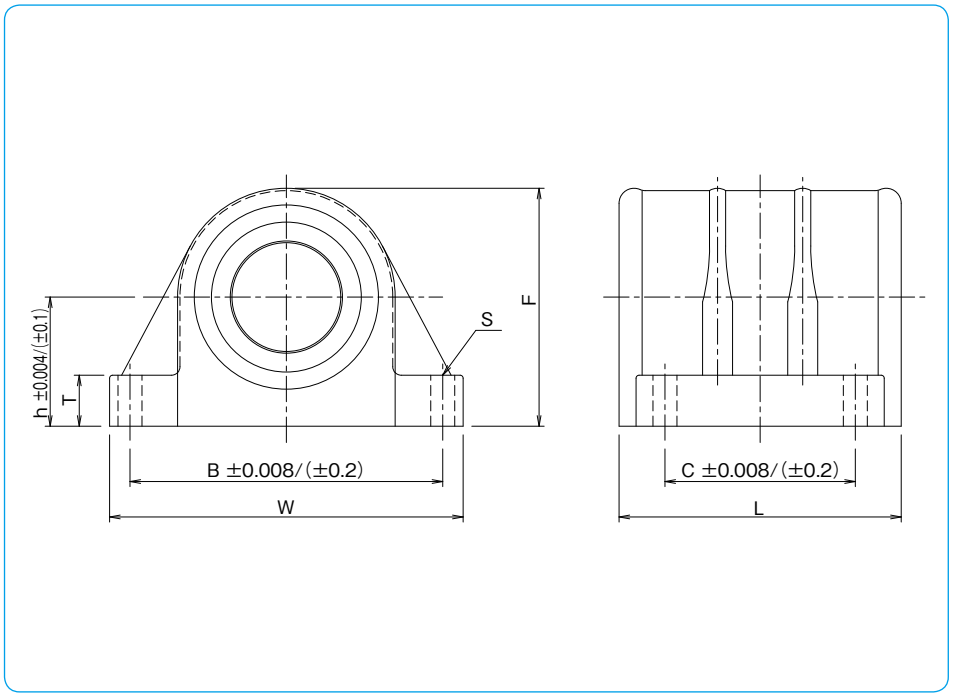

part number	inner contact diameter inch/(mm)	tolerance inch/(μm)	h inch/(mm)	W inch/(mm)	L inch/(mm)	F inch/(mm)	T inch/(mm)	B inch/(mm)	C inch/(mm)	S inch/(mm)	basic load rating dynamic C N	static Co N	mass g
			major dimensions										
			outer dimensions				mounting dimensions						
RBW 8	.5000 (12.700)	0 −0.00040 (−9)	.6870 (17.450)	2.000 (50.80)	1.5937 (40.481)	1.2500 (31.750)	.3437 (8.731)	1.688 (42.875)	1.000 (25.400)	.157 (4.0)	510	784	51
RBW 10	.6250 (15.875)		.8750 (22.225)	2.500 (63.50)	1.8437 (46.831)	1.6250 (41.275)	.3750 (9.525)	2.125 (53.975)	1.125 (28.575)	.189 (4.8)	774	1180	99
RBW 12	.7500 (19.050)	0 −0.00040 (−10)	.9370 (23.800)	2.750 (69.85)	1.9687 (50.006)	1.7500 (44.450)	.4063 (10.319)	2.375 (60.325)	1.250 (31.750)	.189 (4.8)	862	1370	129
RBW 16	1.0000 (25.400)		1.1870 (30.150)	3.250 (82.55)	2.5937 (65.881)	2.1870 (55.550)	.4687 (11.906)	2.875 (73.025)	1.750 (44.450)	.220 (5.6)	980	1570	242

※RBW type has side-seals as standard.

SI UNIT 1N≒0.225lbf
1kg≒2.205lbs

www.bergab.ru Берг АБ bergab@ya.ru Тел. (495)-228-06-21, факс (495) 223-3071

www.bergab.ru Берг АБ bergab@ya.ru Тел. (495)-228-06-21, факс (495) 223-3071

CE TYPE

– Non-Clearance Adjustable Type –

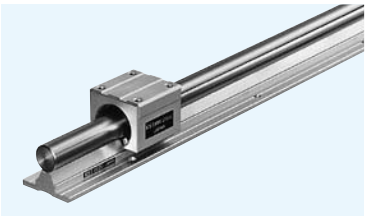

part number structure

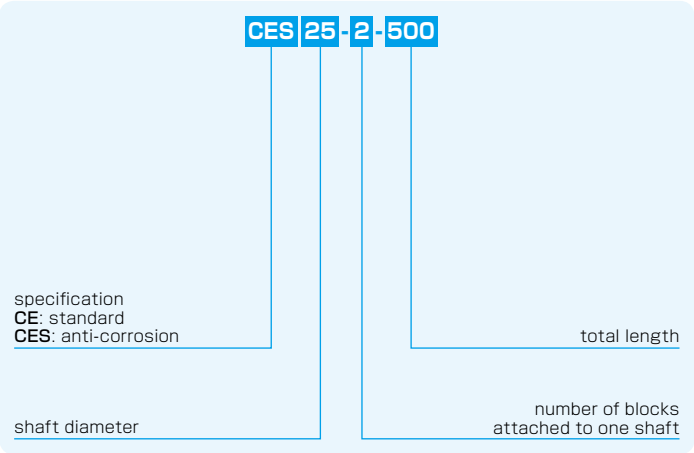

※Bush inside is a resin retainer type with seals.

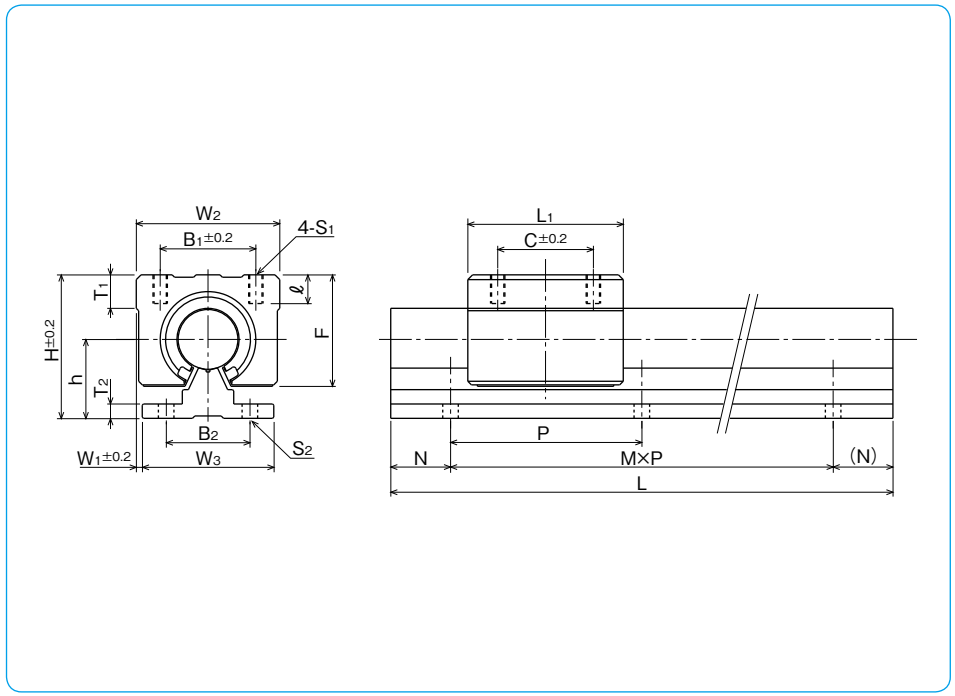

part number standard	part number anti-corrosion	shaft diameter mm	assembly dimension H mm	h mm	W1 mm	block dimension W2 mm	L1 mm	B1 mm	C mm	T1 mm	ℓ mm	S1	F mm	major dimensions W3 mm	B2 mm	T2 mm	P mm	S2 mm
CE16	**CES16**	16	45	25	2.5	45	45	32	30	9	12	M5	33	40	30	5	150	5.5
CE20	**CES20**	20	50	27	1.5	48	50	35	35	11	12	M6	39	45	30	5	150	5.5
CE25	**CES25**	25	60	33	2.5	60	65	40	40	14	12	M6	47	55	35	6	200	6.5
CE30	**CES30**	30	70	37	5	70	70	50	50	15	18	M8	56	60	40	7	200	6.5

rail dimensions L (M,N) mm				basic load rating dynamic C N	static Co N	mass block g	rail kg/m	size
300 (1,75) 1,500 (9,75)	500 (3,25) 1,800 (11,75)	800 (5,25) 2,000 (13,25)	1,000 (6,50)	774	1,180	150	2.58	**16**
300 (1,75) 1,500 (9,75)	500 (3,25) 1,800 (11,75)	800 (5,25) 2,000 (13,25)	1,000 (6,50)	882	1,370	200	3.49	**20**
300 (1,50) 1,500 (7,50)	500 (2,50) 1,800 (8,100)	800 (3,100) 2,000 (9,100)	1,000 (4,100)	980	1,570	450	5.31	**25**
300 (1,50) 1,500 (7,50)	500 (2,50) 1,800 (8,100)	800 (3,100) 2,000 (9,100)	1,000 (4,100)	1,570	2,740	630	7.39	**30**

1N≒0.102kgf

www.bergab.ru Берг АБ bergab@ya.ru Тел. (495)-228-06-21, факс (495) 223-3071

www.bergab.ru Берг АБ bergab@ya.ru Тел. (495)-228-06-21, факс (495) 223-3071

CD TYPE

– Clearance Adjustable Type –

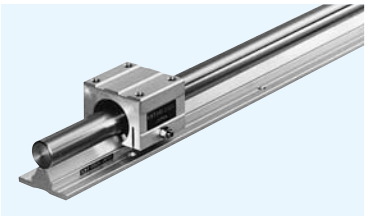

part number structure

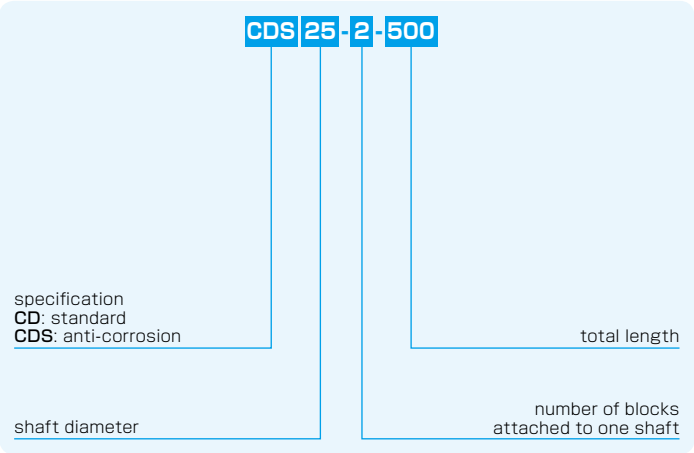

※Bush inside is a resin retainer type with seals.

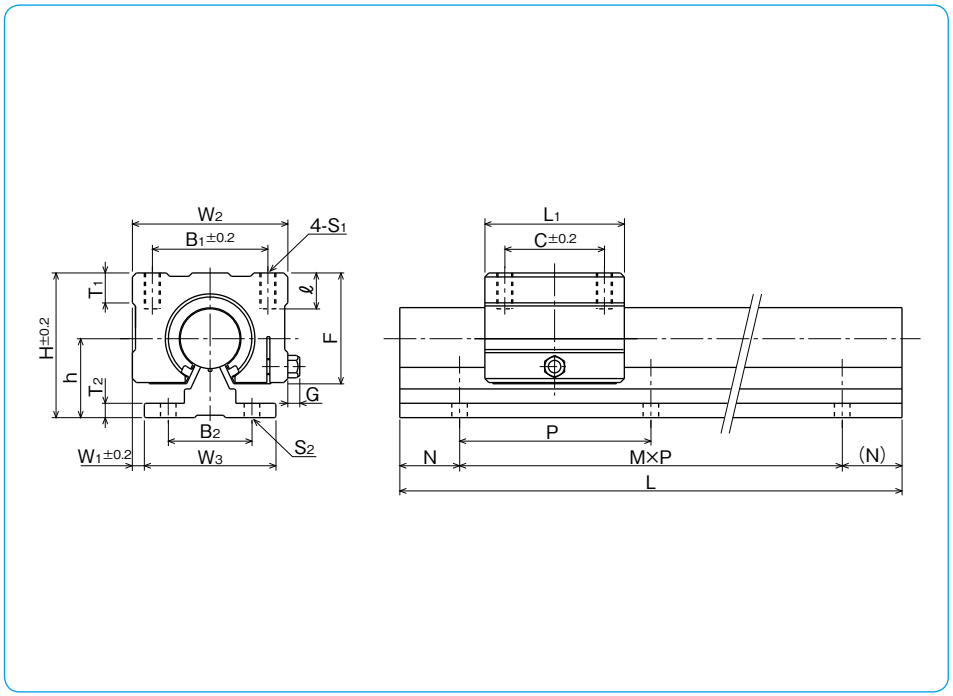

part number standard	part number anti-corrosion	shaft diameter mm	assembly dimensions H mm	h mm	W1 mm	block dimensions W2 mm	L1 mm	B1 mm	C mm	T1 mm	ℓ mm	S1	G mm	F mm	major dimensions W3 mm	B2 mm	T2 mm	P mm	S2 mm
CD16	**CDS16**	16	45	25	5	50	45	36	30	9	12	M5	6	33	40	30	5	150	5.5
CD20	**CDS20**	20	50	27	4.5	54	50	40	35	11	12	M6	7	39	45	30	5	150	5.5
CD25	**CDS25**	25	60	33	10.5	76	65	54	40	14	12	M6	7	47	55	35	6	200	6.5
CD30	**CDS30**	30	70	37	9	78	70	58	50	15	18	M8	7	56	60	40	7	200	6.5

rail dimensions L (M,N) mm	basic load rating dynamic C N	static Co N	mass block g	rail kg/m	size
300 (1,75) 500 (3,25) 800 (5,25) 1,000 (6,50) 1,500 (9,75) 1,800 (11,75) 2,000 (13,25)	774	1,180	170	2.58	**16**
300 (1,75) 500 (3,25) 800 (5,25) 1,000 (6,50) 1,500 (9,75) 1,800 (11,75) 2,000 (13,25)	882	1,370	240	3.49	**20**
300 (1,50) 500 (2,50) 800 (3,100) 1,000 (4,100) 1,500 (7,50) 1,800 (8,100) 2,000 (9,100)	980	1,570	580	5.31	**25**
300 (1,50) 500 (2,50) 800 (3,100) 1,000 (4,100) 1,500 (7,50) 1,800 (8,100) 2,000 (9,100)	1,570	2,740	720	7.39	**30**

1N≒0.102kgf

www.bergab.ru Берг АБ bergab@ya.ru Тел. (495)-228-06-21, факс (495) 223-3071

www.bergab.ru Берг АБ bergab@ya.ru Тел. (495)-228-06-21, факс (495) 223-3071

SWA TYPE (Inch Standard)

— Block Type —

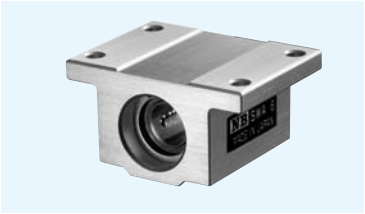

part number structure

example **SWA 20 G R UU**

specification
SWA: standard
SWSA: anti-corrosion

size

retainer material
blank: standard/steel
anti-corrosion/stainless steel
G: resin

self-aligning
(SWA-resin retainer only)

seal
blank: without seal
UU: seals on both sides

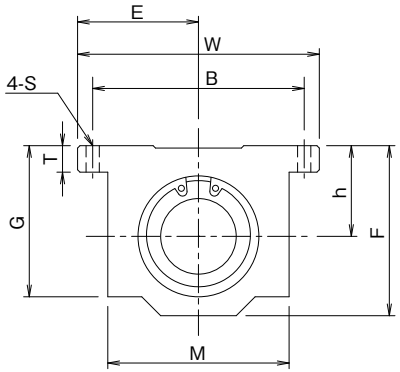

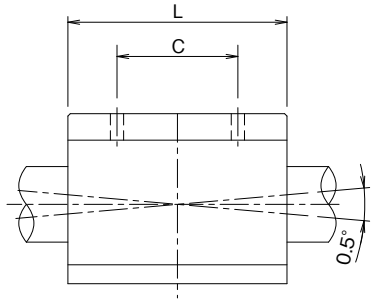

self-aligning in all directions
by using SWA···GRUU

part number	inner contact diameter inch/(mm)	tolerance inch/(μm)	h ±.001/(±0.02) inch/(mm)	E ±.001/(±0.02) inch/(mm)	W inch/(mm)	L inch/(mm)	F inch/(mm)	T inch/(mm)	G inch/(mm)	M inch/(mm)	B ±.01/(±0.2) inch/(mm)	C ±.01/(±0.2) inch/(mm)	S inch/(mm)	basic load rating dynamic C N	basic load rating static Co N	mass g
			major dimensions outer dimensions					mounting dimensions								
SWA 4GUU	.2500 (6.350)	0 −.00040 (−9)	.4370 (11.100)	.8125 (20.638)	1.625 (41.28)	1.188 (30.16)	.813 (20.64)	.188 (4.76)	.750 (19.05)	1.000 (25.40)	1.312 (33.33)	.750 (19.05)	.156 (4.0)	206	265	45
SWA 6GUU	.3750 (9.525)		.5000 (12.700)	.8750 (22.225)	1.750 (44.45)	1.313 (33.34)	.938 (23.82)	.188 (4.76)	.875 (22.23)	1.125 (28.58)	1.437 (36.50)	.875 (22.23)	.156 (4.0)	225	314	62
SWA 8GUU	.5000 (12.700)		.6870 (17.450)	1.0000 (25.400)	2.000 (50.80)	1.688 (42.86)	1.250 (31.75)	.250 (6.35)	1.125 (28.58)	1.375 (34.93)	1.688 (42.88)	1.000 (25.40)	.156 (4.0)	510	784	130
SWA 10GUU	.6250 (15.875)		.8750 (22.225)	1.2500 (31.750)	2.500 (63.50)	1.938 (49.21)	1.625 (41.28)	.281 (7.14)	1.437 (36.50)	1.750 (44.45)	2.125 (53.98)	1.125 (28.58)	.188 (4.8)	774	1,180	240
SWA 12GUU	.7500 (19.050)	0 −.00040 (−10)	.9370 (23.800)	1.3750 (34.925)	2.750 (69.85)	2.063 (52.39)	1.750 (44.45)	.313 (7.94)	1.563 (39.69)	1.875 (47.63)	2.375 (60.33)	1.250 (31.75)	.188 (4.8)	862	1,370	290
SWA 16GUU	1.0000 (25.400)		1.1870 (30.150)	1.6250 (41.275)	3.250 (82.55)	2.813 (71.44)	2.188 (55.56)	.375 (9.53)	1.938 (49.21)	2.375 (60.33)	2.875 (73.03)	1.750 (44.45)	.219 (5.6)	980	1,570	615
SWA 20GUU	1.2500 (31.750)	0 −.00050 (−12)	1.5000 (38.100)	2.0000 (50.800)	4.000 (101.60)	3.625 (92.08)	2.813 (71.44)	.438 (11.11)	2.500 (63.50)	3.000 (76.20)	3.500 (88.90)	2.000 (50.80)	.219 (5.6)	1,570	2,740	1,300
SWA 24GUU	1.5000 (38.100)		1.7500 (44.450)	2.3750 (60.325)	4.750 (120.65)	4.000 (101.60)	3.250 (82.55)	.500 (12.70)	2.875 (73.03)	3.500 (88.90)	4.125 (104.78)	2.500 (63.50)	.281 (7.2)	2,160	4,020	1,900
SWA 32GUU	2.0000 (50.800)		2.1250 (53.975)	3.0000 (76.200)	6.000 (152.40)	5.000 (127.00)	4.063 (103.19)	.625 (15.88)	3.625 (92.08)	4.500 (114.30)	5.250 (133.35)	3.250 (82.55)	.406 (10.5)	3,820	7,940	3,600

SI UNIT 1N≒0.225lbf
1kg≒2.205lbs

www.bergab.ru Берг АБ bergab@ya.ru Тел. (495)-228-06-21, факс (495) 223-3071

www.bergab.ru Берг АБ bergab@ya.ru Тел. (495)-228-06-21, факс (495) 223-3071

SWJ TYPE (Inch Standard)

– Clearance Adjustable Block Type –

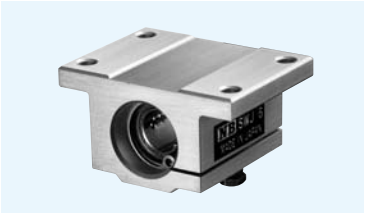

part number structure

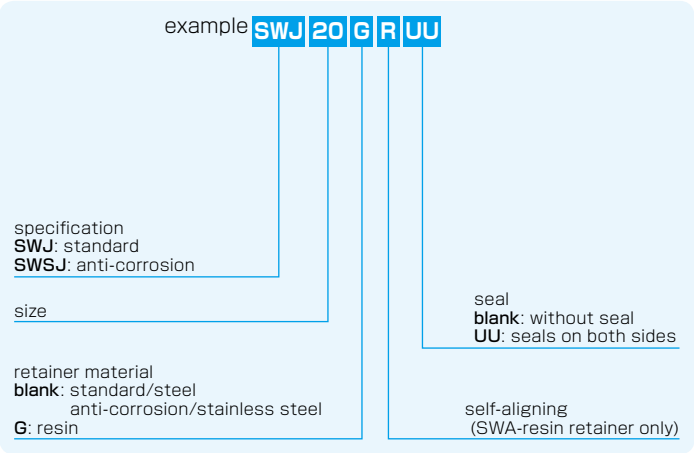

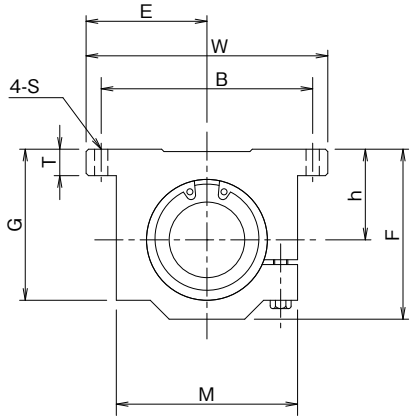

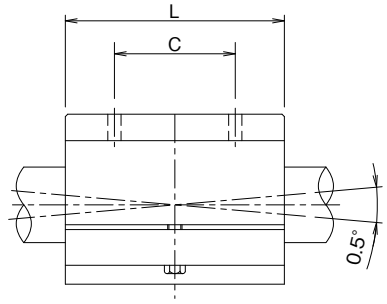

self-aligning in all directions
by using SWJ···GRUU

part number	inner contact diameter inch/(mm)	h ±.001/(±0.02) inch/(mm)	E ±.001/(±0.02) inch/(mm)	W inch/(mm)	major dimensions outer dimensions L inch/(mm)	F inch/(mm)
SWJ 4GUU	.2500 (6.350)	.4370 (11.100)	.8125 (20.638)	1.625 (41.28)	1.188 (30.16)	.813 (20.64)
SWJ 6GUU	.3750 (9.525)	.5000 (12.700)	.8750 (22.225)	1.750 (44.45)	1.313 (33.34)	.938 (23.82)
SWJ 8GUU	.5000 (12.700)	.6870 (17.450)	1.0000 (25.400)	2.000 (50.80)	1.688 (42.86)	1.250 (31.75)
SWJ 10GUU	.6250 (15.875)	.8750 (22.225)	1.2500 (31.750)	2.500 (63.50)	1.938 (49.21)	1.625 (41.28)
SWJ 12GUU	.7500 (19.050)	.9370 (23.800)	1.3750 (34.925)	2.750 (69.85)	2.063 (52.39)	1.750 (44.45)
SWJ 16GUU	1.0000 (25.400)	1.1870 (30.150)	1.6250 (41.275)	3.250 (82.55)	2.813 (71.44)	2.188 (55.56)
SWJ 20GUU	1.2500 (31.750)	1.5000 (38.100)	2.0000 (50.800)	4.000 (101.60)	3.625 (92.08)	2.813 (71.44)
SWJ 24GUU	1.5000 (38.100)	1.7500 (44.450)	2.3750 (60.325)	4.750 (120.65)	4.000 (101.60)	3.250 (82.55)
SWJ 32GUU	2.0000 (50.800)	2.1250 (53.975)	3.0000 (76.200)	6.000 (152.40)	5.000 (127.00)	4.063 (103.19)

T inch/(mm)	G inch/(mm)	M inch/(mm)	mounting dimensions B ±.01/(±0.2) inch/(mm)	C ±.01/(±0.2) inch/(mm)	S inch/(mm)	basic load rating dynamic C N	static Co N	mass g
.188 (4.76)	.750 (19.05)	1.000 (25.40)	1.312 (33.33)	.750 (19.05)	.156 (4.0)	206	265	45
.188 (4.76)	.875 (22.23)	1.125 (28.58)	1.437 (36.50)	.875 (22.23)	.156 (4.0)	225	315	62
.250 (6.35)	1.125 (28.58)	1.375 (34.93)	1.688 (42.88)	1.000 (25.40)	.156 (4.0)	510	784	130
.281 (7.14)	1.437 (36.50)	1.750 (44.45)	2.125 (53.98)	1.125 (28.58)	.188 (4.8)	774	1,180	240
.313 (7.94)	1.563 (39.69)	1.875 (47.63)	2.375 (60.33)	1.250 (31.75)	.188 (4.8)	862	1,370	290
.375 (9.53)	1.938 (49.21)	2.375 (60.33)	2.875 (73.03)	1.750 (44.45)	.219 (5.6)	980	1,570	615
.438 (11.11)	2.500 (63.50)	3.000 (76.20)	3.500 (88.90)	2.000 (50.80)	.219 (5.6)	1,570	2,740	1,300
.500 (12.70)	2.875 (73.03)	3.500 (88.90)	4.125 (104.78)	2.500 (50.80)	.281 (7.2)	2,160	4,020	1,900
.625 (15.88)	3.625 (92.08)	4.500 (114.30)	5.250 (133.35)	3.250 (82.55)	.406 (10.5)	3,820	7,940	3,600

SI UNIT 1N≒0.225lbf
1kg≒2.205lbs

www.bergab.ru Берг АБ bergab@ya.ru Тел. (495)-228-06-21, факс (495) 223-3071

www.bergab.ru Берг АБ bergab@ya.ru Тел. (495)-228-06-21, факс (495) 223-3071

SWD TYPE (Inch Standard)

– Open Block Type –

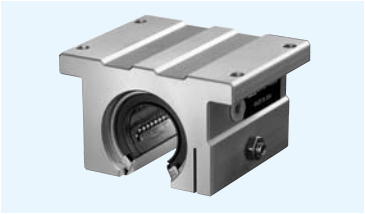

part number structure

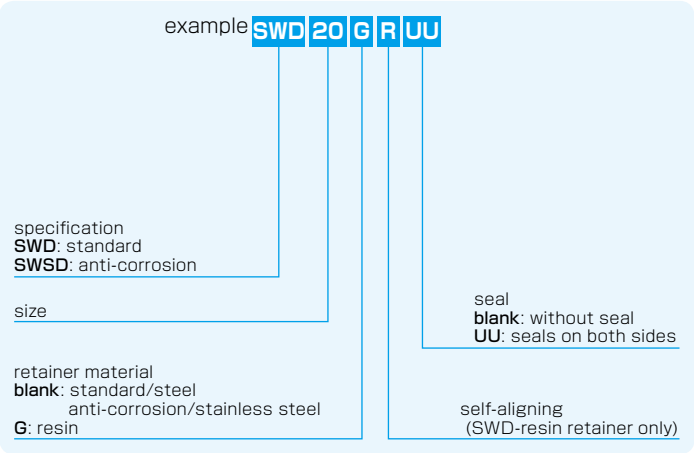

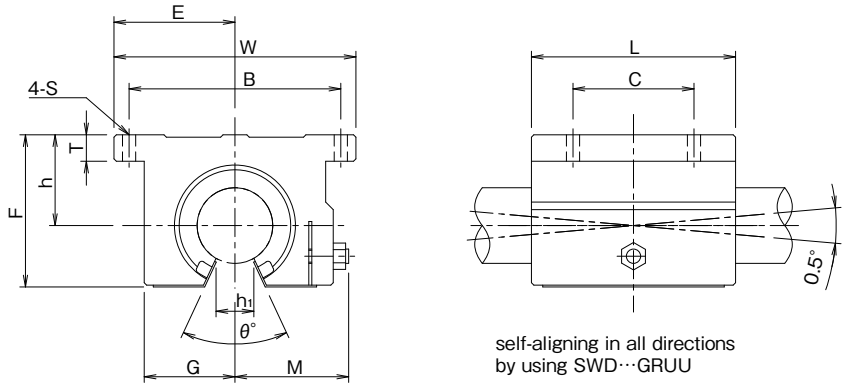

self-aligning in all directions
by using SWD···GRUU

part number	inner contact diameter inch/(mm)	h ±.001/(±0.02) inch/(mm)	E ±.001/(±0.02) inch/(mm)	W inch/(mm)	L inch/(mm)	F inch/(mm)	T inch/(mm)	G inch/(mm)
							major dimensions outer dimensions	
SWD 8GUU	.5000 (12.700)	.6870 (17.450)	1.0000 (25.400)	2.000 (50.80)	1.500 (38.10)	1.100 (27.94)	.250 (6.35)	.688 (17.5)
SWD 10GUU	.6250 (15.875)	.8750 (22.225)	1.2500 (31.750)	2.500 (63.50)	1.750 (44.45)	1.375 (34.93)	.281 (7.14)	.875 (22.23)
SWD 12GUU	.7500 (19.050)	.9370 (23.800)	1.3750 (34.950)	2.750 (69.85)	1.875 (47.63)	1.535 (39.00)	.315 (8.00)	.937 (23.80)
SWD 16GUU	1.0000 (25.400)	1.1870 (30.150)	1.6250 (41.300)	3.250 (82.55)	2.625 (66.68)	1.975 (50.17)	.375 (9.53)	1.188 (30.18)
SWD 20GUU	1.2500 (31.750)	1.5000 (38.100)	2.0000 (50.800)	4.000 (101.60)	3.375 (85.73)	2.485 (63.12)	.437 (11.10)	1.500 (38.10)
SWD 24GUU	1.5000 (38.100)	1.7500 (44.450)	2.3750 (60.325)	4.750 (120.65)	3.750 (95.25)	2.910 (73.90)	.500 (12.70)	1.750 (44.45)
SWD 32GUU	2.0000 (50.800)	2.1250 (53.975)	3.0000 (76.200)	6.000 (152.4)	4.750 (120.65)	3.660 (92.90)	.625 (15.88)	2.250 (57.15)

M inch/(mm)	h_1 inch/(mm)	θ	mounting dimensions B ±.01/(±0.2) inch/(mm)	C ±.01/(±0.2) inch/(mm)	S inch/(mm)	basic load rating dynamic C N	static Co N	mass g
.98 (24.89)	.3425 (8.70)	80°	1.688 (42.88)	1.000 (25.40)	.156 (4.0)	510	784	98
1.15 (29.21)	.375 (9.53)	80°	2.125 (53.98)	1.125 (28.58)	.188 (4.8)	774	1,180	185
1.23 (31.24)	.4375 (11.11)	60°	2.375 (60.33)	1.250 (31.75)	.188 (4.8)	862	1,370	235
1.48 (37.59)	.5625 (14.29)	50°	2.875 (73.03)	1.750 (44.45)	218 (5.6)	980	1,570	530
1.88 (47.75)	.625 (15.88)	50°	3.500 (88.90)	2.000 (50.80)	.218 (5.6)	1,570	2,740	1,080
2.12 (53.85)	.750 (19.05)	50°	4.125 (104.78)	2.500 (63.50)	.281 (7.4)	2,160	4,020	1,620
2.70 (68.58)	1.00 (25.40)	50°	5.250 (133.35)	3.250 (82.55)	.406 (10.5)	3,820	7,940	3,100

SI UNIT 1N≒0.225lbf
1kg≒2.205lbs

www.bergab.ru Берг АБ bergab@ya.ru Тел. (495)-228-06-21, факс (495) 223-3071

www.bergab.ru Берг АБ bergab@ya.ru Тел. (495)-228-06-21, факс (495) 223-3071

TOPBALL®

www.bergab.ru Берг АБ bergab@ya.ru Тел. (495)-228-06-21, факс (495) 223-3071

www.bergab.ru Берг АБ bergab@ya.ru Тел. (495)-228-06-21, факс (495) 223-3071

TOPBALL®

The NB TOPBALL is a linear motion mechanism utilizing the rotational motion of ball elements. NB's self-aligning TOPBALL can be designed into many different applications such as factory automated equipment, machine tools, industrial machines, electrical equipment, optical and measuring instruments.

STRUCTURE AND ADVANTAGES

Higher Load Capacity and Longer Travel life

NB's uniquely designed load plate provides circular arch contact to the ball element resulting in a greater dispersion of the load, enabling TOPBALL to provide up to three times the load capacity therefore 27 times the travel life of conventional slide bushings.

Self Aligning Capability

Load plates are thinner at the ends to provide a pivot point at the center of the plate. The center acts as a fulcrum to compensate for any slight misalignment between the shaft and the housing bore that might be caused by inaccurate machining, mounting errors or shaft deflection.

Floating Seal

NB's unique floating seal design allows for self-alignment while maintaining equal and constant contact to the shaft. Seals do not add to the overall length of the bushing allowing for more compact designs.

High Speed

TOPBALL meets high speed requirements. The maximum speed is 180m/min.

Clearance Adjustable

TOPBALL load plates are designed to "float" in the outer sleeve which allows for clearance between the ball elements and shaft to best suit application requirements.

TOPBALL Unit

This is a TOPBALL with a housing. The housing has the most appropriate bore tolerance that optimizes TOPBALL's performance.

Figure D-1 Circular Arch Design and Ground Surface Raceway

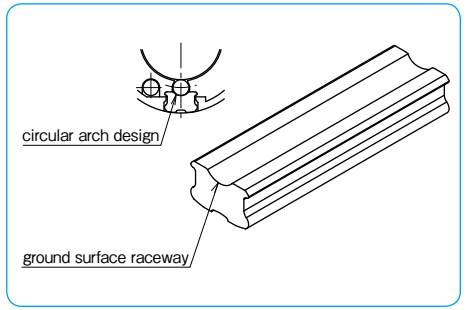

Figure D-2 Floating Seal and Self-aligning Feature

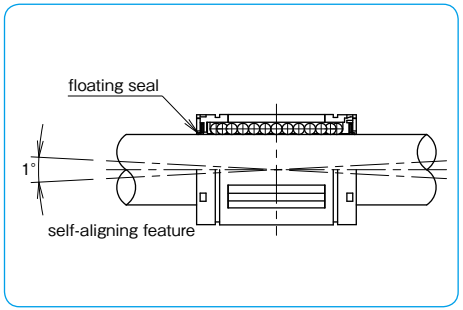

TYPES

Table D-1 Types

		Metric Series		Inch Series	
TOPBALL	closed type	TK P.D-6		TW P.D-8	
TOPBALL	open type	TK-OP P.D-6		TW-OP P.D-8	
TOPBALL Unit	closed type	TKA P.D-10	TKA-W P.D-11	TWA P.D-16	TWA-W P.D-17
TOPBALL Unit	adjustable type			TWJ P.D-18	TWJ-W P.D-19
TOPBALL Unit	open type	TKE P.D-12	TKE-W P.D-13		
TOPBALL Unit	adjustable-open type	TKD P.D-14	TKD-W P.D-15	TWD P.D-20	TWD-W P.D-21

www.bergab.ru Берг АБ bergab@ya.ru Тел. (495)-228-06-21, факс (495) 223-3071

www.bergab.ru Берг АБ bergab@ya.ru Тел. (495)-228-06-21, факс (495) 223-3071

LIFE CALCULATION

Since ball elements are used as the rolling element in the NB TOPBALL, the following equation is used to calculate the rated life.

$$L=\left(\frac{f_H \cdot f_T \cdot f_C}{f_W} \cdot \frac{C}{P}\right)^3 \cdot 50$$

L: rated life (km) f_H: hardness coefficient
f_T: temperature coefficient f_C: contact coefficient
f_W: applied load coefficient (Table D-2)
C: basic dynamic load rating (N) P: applied load (N)
*Refer to page Eng-5 for the coefficients.

Applied Load Coefficient (f_W)

When calculating the applied load, the weight of the mass, inertial force, moment resulting from the motion, and the variation with time should be accurately estimated. However, it is very difficult to accurately estimate the applied load due to the existence of numerous variables, including the start/stop conditions of the reciprocating motion and of the shock/vibration. Estimation is simplified by using the values given in Table D-2.

If the stroke and number of cycles per unit time are constant, the life time is calculated using the following equation.

$$L_h=\frac{L \cdot 10^3}{2 \cdot \ell_s \cdot n_1 \cdot 60}$$

L_h: life time (hr) ℓ_s: stroke length (m)
L: rated life (km) n_1: number of cycles per minute (cpm)

Table D-2 Applied Load Coefficient

operating conditions	applied load coefficient f_W
no shock/vibration 15 m/min or less	1.0~1.5
low shock/vibration 60 m/min or less	1.5~2.0
high shock/vibration 90 m/min or less	2.0~3.5
high shock/vibration 180 m/min or less	3.5 or more

Relation Between Ball Circuits and Load Rating

The load rating of a slide bush varies according to the loaded positin on the circumference.
The value in the dimension table indicates the lowest load rating with the load placed on top of one ball circuit.
If the slide bush is used with two ball circuits loaded uniformly, the value will be greater.
Table D-3 shows the load ratio for the number of ball circuits in each case.

Table D-3 Optional Load Positions

number of rows	4	5	6
C (load rating specified on the table)			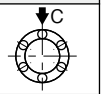
Cmax (maximum load rating)			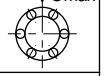
load ratio Cmax/C	1.414	1.463	1.280

MOUNTING

Clearance and Fit

An appropriate clearance between TOPBALL and shaft is required in TOPBALL operation. Inadequate clearance may cause early failure and/or poor, rough movement. Proper clearance is determined by shaft diameter and housing bore. Table D-4 and D-5 show recommended tolerances of the shaft and housing bore.

Shaft and Housing

To optimize NB TOPBALL performance, high precision shafts and housings are required.

1. Shaft: Dimensional tolerance, surface roughness and hardness greatly affect the traveling performance of the TOPBALL.
   The shaft must be manufactured to the following tolerances.
   A. Surface roughness of 0.4Ra or less.
   B. Hardness of 60 HRC or more (refer to page Eng-5).
   C. The proper tolerance of the shaft diameter is recommended on Table D-4 and D-5.

The NB Shaft is an ideal component manufactured to meet these specifications. Please see pages F-1 ~ for details.

2. Housing: There are a wide range of designs and manufacturing techniques for housings. NB TOPBALL Units are available as standard products. When housings are prepared separately please refer to Table D-4 and D-5 for a proper fit.

Table D-4: Recommended Tolerance for Shaft Dia. and Housing Bore

part number	shaft dia. dr mm	tol. (h6) μm	housing bore D mm	tol. (H7) μm
TK 8	8	0 −9	16	+18/0
TK10	10		19	+21 0
TK12	12	0 −11	22	
TK16	16		26	
TK20	20	0 −13	32	+25 0
TK25	25		40	
TK30	30		47	
TK40	40	0 −16	62	+30 0
TK50	50		75	

Table D-5: Recommended Tolerance for Shaft Dia. and Housing Bore

part number	shaft dia. dr inch	tol. (g6) inch	housing bore D inch	tol. (H7) inch
TW 3	.1875	−.0002 −.0006	.3750	+.0005/0
TW 4	.2500		.5000	+.0007 0
TW 6	.3750		.6250	
TW 8	.5000	−.0002	.8750	+.0008 0
TW10	.6250	−.0007	1.1250	
TW12	.7500	−.0003	1.2500	+.0010 0
TW16	1.0000	−.0008	1.5625	
TW20	1.2500	−.0004	2.0000	+.0012 0
TW24	1.5000	−.0010	2.3750	
TW32	2.0000	−.0004/−.0012	3.0000	

Mounting

TK type TOPBALL is designed to be press fitted into the housing bore. When inserting bushing, however, don't apply excess force nor shock load which may cause permanent damage. For TW type TOPBALL, examples of mouting are shown in Figures D-3~6 and D-8.

Examples of Mounting

Figures D-3 to D-8 illustrate mounting methods as example.

Figure D-3 Use of Holding Plates

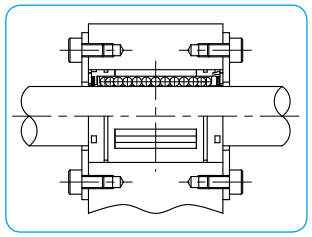

Figure D-4 Clearance Adjustable Type

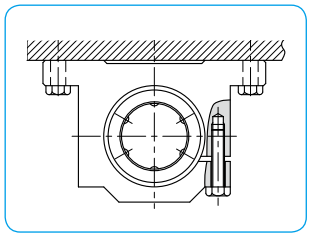

Figure D-5 Use of Retaining Rings

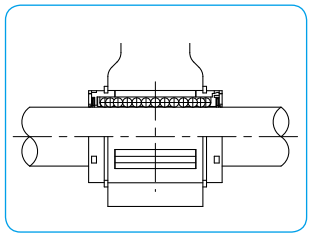

Figure D-6 Open Type

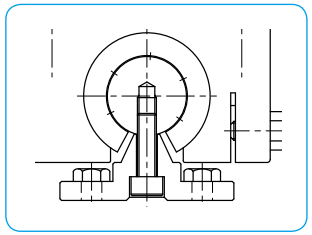

Figure D-7 Press Fit (TK type)

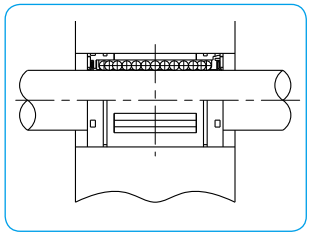

Figure D-8 Pin Fixing

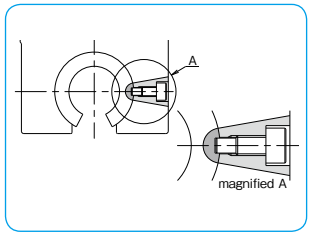

* SA type support rails are not compatible with the TOPBALL units.

* Please fix by the pin for open type housing .

SPECIFICATION

Anti-Corrosive Type

A special TOPBALL is also available for anti-corrosive requirements. Please specify with a suffix "-SK" for either TOPBALL or TOPBALL Unit part number. The load plates are electroless nickel plated and balls are made of stainless steel.

www.bergab.ru Берг АБ bergab@ya.ru Тел. (495)-228-06-21, факс (495) 223-3071

www.bergab.ru Берг АБ bergab@ya.ru Тел. (495)-228-06-21, факс (495) 223-3071

TK TYPE
– TOPBALL Metric Type –

TK type

TK-OP type

part number structure

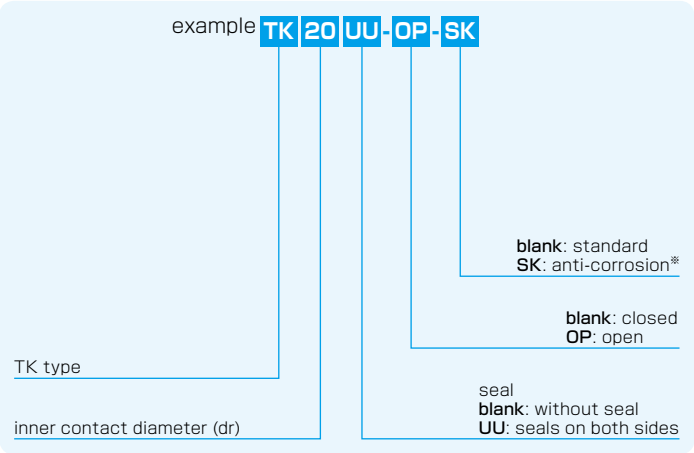

※For anti-corrosion the load plates are electroless nickel plated with stainless steel balls.

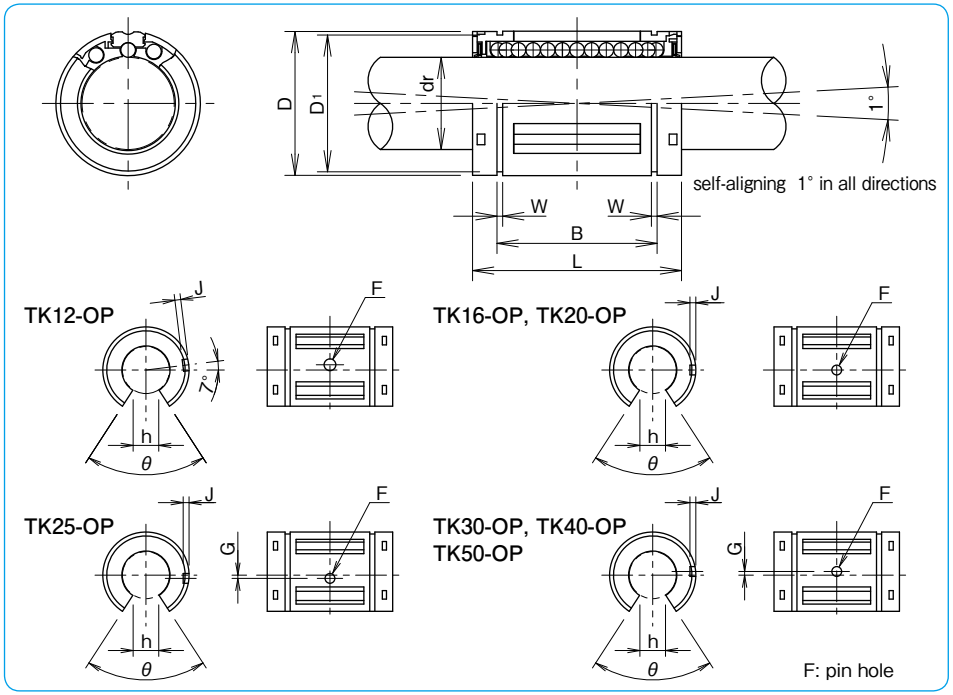

part number						major dimensions				
closed type			open type			dr*		D	L	
	number of ball circuits	mass g		number of ball circuits	mass g	mm	tolerance μm	mm	mm	tolerance mm
TK 8	4	7.3	–	–	–	8	+8 0	16	25	±0.2
TK10	5	14	–	–	–	10		19	29	
TK12	5	21	TK12-OP	4	17	12		22	32	
TK16	5	43	TK16-OP	4	35	16	+9 −1	26	36	
TK20	6	58	TK20-OP	5	48	20		32	45	
TK25	6	123	TK25-OP	5	103	25	+11 −1	40	58	
TK30	6	216	TK30-OP	5	177	30		47	68	
TK40	6	333	TK40-OP	5	275	40	+13 −2	62	80	
TK50	6	618	TK50-OP	5	520	50		75	100	

* Based on nominal housing bore

** One-sided seal is also available. Please contact NB for details.

B		W	D1	open type					basic load rating		shaft diameter
mm	tolerance mm	mm	mm	h mm	θ	F H11 mm	G mm	J mm	dynamic C N	static Co N	mm
16.5	0 −0.2	1.1	15.2	–	–	–	–	–	423	534	8
22.0		1.3	18	–	–	–	–	–	750	935	10
22.9		1.3	21	6.5	66°	3	–	0.7	1,020	1,290	12
24.9		1.3	24.9	9	68°		–	1.0	1,250	1,550	16
31.5		1.6	30.3	9	55°		–	1.0	2,090	2,630	20
44.1	0 −0.3	1.85	37.5	11.5	57°		1.5	1.5	3,780	4,720	25
52.1		1.85	44.5	14	57°		2	1.7	5,470	6,810	30
60.6		2.15	59	19.5	56°		1.5	2.4	6,590	8,230	40
77.6		2.65	72	22.5	54°	5	2.5	2.7	10,800	13,500	50

1N≒0.102kgf

www.bergab.ru Берг АБ bergab@ya.ru Тел. (495)-228-06-21, факс (495) 223-3071

www.bergab.ru Берг АБ bergab@ya.ru Тел. (495)-228-06-21, факс (495) 223-3071

TW TYPE

– TOPBALL Inch Type –

TW type

TW-OP type

part number structure

example **TW 20 UU - OP - SK**

- TW type
- size
- seal
  - blank: without seal
  - UU: seals on both sides
- blank: closed
  - OP: open
- blank: standard
  - SK: anti-corrosion※

※For anti-corrosion the load plates are electroless nickel plated with stainless steel balls.

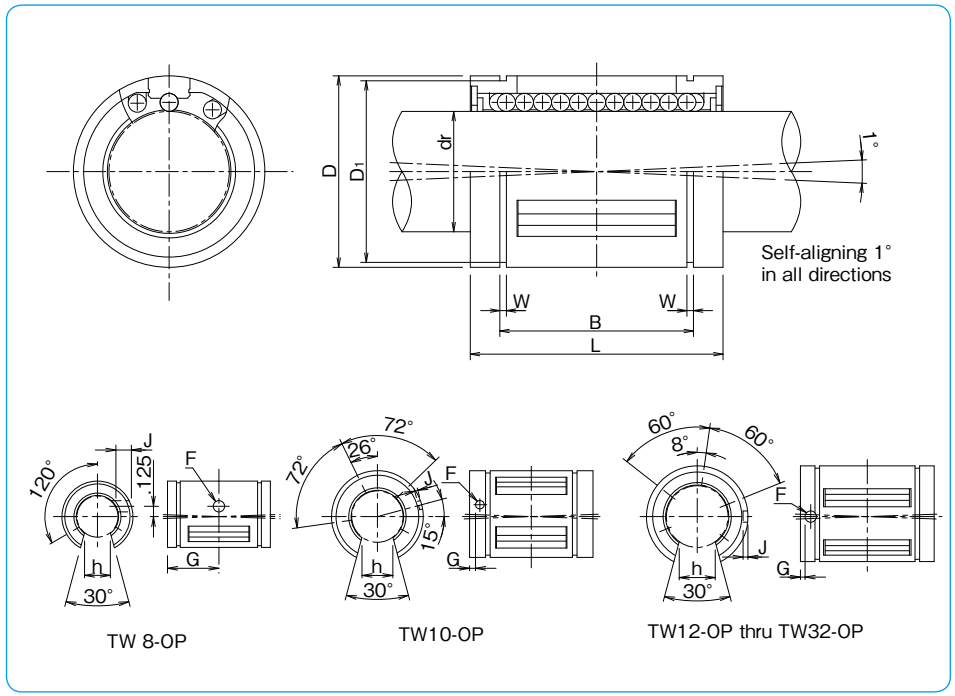

part number						major dimensions				
closed type			open type			dr*		D	L	
	number of ball circuits	mass lbs		number of ball circuits	mass lbs	inch	tolerance inch	inch	inch	tolerance inch
TW 3	4	.004	–	–	–	.1875	0 -.0005	.3750	.562	±.008
TW 4	4	.009	–	–	–	.2500		.5000	.750	0 -.015
TW 6	4	.014	–	–	–	.3750		.6250	.875	
TW 8	4	.043	TW 8-OP	3	.033	.5000		.8750	1.250	0 -020
TW 10	5	.103	TW 10-OP	4	.083	.6250		1.1250	1.500	
TW 12	6	.123	TW 12-OP	5	.102	.7500		1.2500	1.625	
TW 16	6	.265	TW 16-OP	5	.220	1.0000		1.5625	2.250	
TW 20	6	.485	TW 20-OP	5	.419	1.2500	0 -.0006	2.0000	2.625	0/-.025
TW 24	6	.750	TW 24-OP	5	.639	1.5000		2.3750	3.000	0/-.030
TW 32	6	1.411	TW 32-OP	5	1.168	2.0000	0/-.0008	3.0000	4.000	0/-.040

B		W	D1	open type				basic load rating		nominal
								dynamic	static	shaft diameter
inch	tolerance inch	inch	inch	h inch	F inch	G inch	J inch	C lbf	Co lbf	inch
–	–	–	–	–	–	–	–	35	47	3/16
.515	0 -.015	.0390	.4687	–	–	–	–	60	80	1/4
.703		.0390	.5880	–	–	–	–	95	120	3/8
1.032	0 -.020	.0459	.8209	.313	.136	.6250	through	230	290	1/2
1.112		.0559	1.0590	.375	.105	.1250	.0390	400	500	5/8
1.272		.0559	1.1760	.438	.136	.1250	.0590	470	590	3/4
1.886		.0679	1.4687	.563	.136	.1250	.0470	850	1,060	1
2.011	0/-.025	.0679	1.8859	.625	.201	.1875	.0900	1,230	1,530	1-1/4
2.422	0/-.030	.0859	2.2389	.750	.201	.1875	.0900	1,480	1,850	1-1/2
3.206	0/-.040	.1029	2.8379	1.000	.265	.3125	through	2,430	3,040	2

* Based on nominal housing bore
** Seals are not available on TW3.
*** One-sided seal is also available. Please contact NB for details.

1inch=25.4mm
1lbs≒0.454kg
1lbf≒4.448N

www.bergab.ru Берг АБ bergab@ya.ru Тел. (495)-228-06-21, факс (495) 223-3071

www.bergab.ru Берг АБ bergab@ya.ru Тел. (495)-228-06-21, факс (495) 223-3071

TKA TYPE (Euro Standard)

– Block Type –

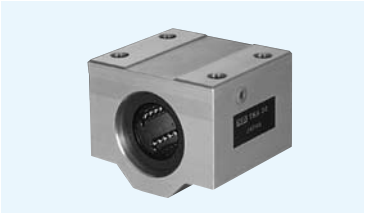

part number structure

example **TKA 30 UU - SK**

- TKA type
- inner contact diameter
- seal
  - **blank**: without seal
  - **UU**: seals on both sides
- **blank**: standard
- **SK**: anti-corrosion※

※For anti-corrosion the load plates are electroless nickel plated with stainless steel balls.

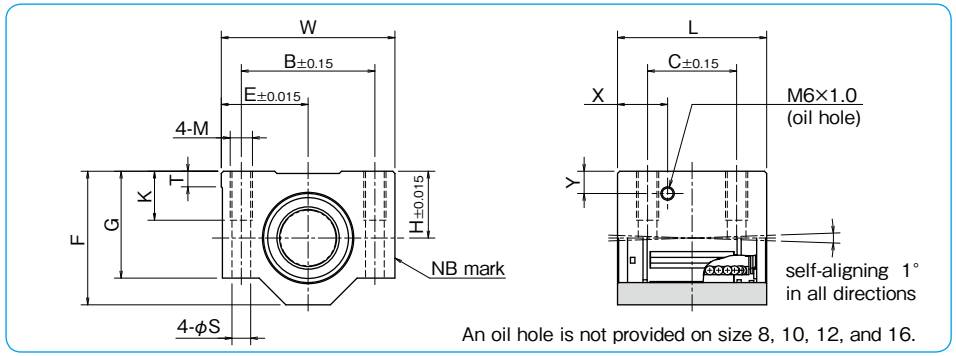

part number	inner contact diameter	major dimensions									mounting dimensions					basic load rating		mass
		H	E	W	L	F	G	T	X	Y	B	C	M	K	S	dynamic C	static Co	
	mm	mm	mm	mm	mm	mm	mm	mm	mm	mm	mm	mm		mm	mm	N	N	g
TKA 8UU	8	15	17.5	35	32	28	22	5	–	–	25	20	M4	9	3.3	423	534	59
TKA10UU	10	16	20	40	36	31.5	25	5	–	–	29	20	M5	11	4.3	750	935	90
TKA12UU	12	18	21.5	43	39	35	28	5	–	–	32	23	M5	11	4.3	1,020	1,290	116
TKA16UU	16	22	26.5	53	43	42	35	5	–	–	40	26	M6	13	5.3	1,250	1,550	205
TKA20UU	20	25	30	60	54	50	42	5	19	9	45	32	M8	18	6.6	2,090	2,630	326
TKA25UU	25	30	39	78	67	60	48	7	22.5	10	60	40	M10	22	8.4	3,780	4,720	624
TKA30UU	30	35	43.5	87	79	70	58	8	26	11.5	68	45	M10	22	8.4	5,470	6,810	980
TKA40UU	40	45	54	108	91	90	72	10	26.5	14	86	58	M12	26	10.5	6,590	8,230	1,670

1N≒0.102kgf

TKA-W TYPE (Euro Standard)

– Double-Wide Block Type –

part number structure

example **TKA 30 W UU - SK**

- TKA type
- inner contact diameter
- double-wide type
- seal
  - **blank**: without seal
  - **UU**: seals on both sides
- **blank**: standard
- **SK**: anti-corrosion※

※For anti-corrosion the load plates are electroless nickel plated with stainless steel balls.

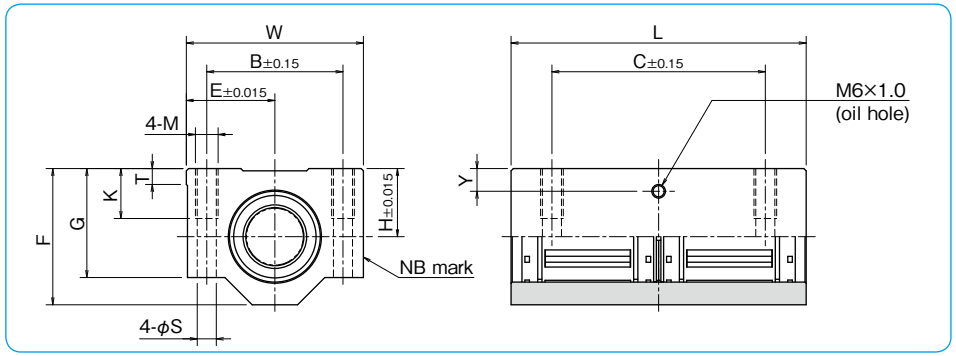

part number	inner contact diameter	major dimensions								mounting dimensions					basic load rating		mass
		H	E	W	L	F	G	T	Y	B	C	M	K	S	dynamic C	static Co	
	mm	mm	mm	mm	mm	mm	mm	mm	mm	mm	mm		mm	mm	N	N	g
TKA 8WUU	8	15	17.5	35	62	28	22	5	6.5	25	50	M4	9	3.3	685	1,068	119
TKA10WUU	10	16	20	40	70	31.5	25	5	7	29	52	M5	11	4.3	1,215	1,870	175
TKA12WUU	12	18	21.5	43	76	35	28	5	7.5	32	56	M5	11	4.3	1,652	2,580	227
TKA16WUU	16	22	26.5	53	84	42	35	5	9.5	40	64	M6	13	5.3	2,025	3,100	390
TKA20WUU	20	25	30	60	104	50	42	5	9	45	76	M8	18	6.6	3,390	5,260	630
TKA25WUU	25	30	39	78	130	60	48	7	10	60	94	M10	22	8.4	6,120	9,440	1,210
TKA30WUU	30	35	43.5	87	152	70	58	8	11.5	68	106	M10	22	8.4	8,860	13,620	1,880
TKA40WUU	40	45	54	108	176	90	72	10	14	86	124	M12	26	10.5	10,680	16,460	3,280

1N≒0.102kgf

www.bergab.ru Берг АБ bergab@ya.ru Тел. (495)-228-06-21, факс (495) 223-3071

www.bergab.ru Берг АБ bergab@ya.ru Тел. (495)-228-06-21, факс (495) 223-3071

TKE TYPE (Euro Standard)

– Open Block Type –

part number structure

example **TKE 30 UU - SK**

- TKE type
- inner contact diameter
- seal
  - **blank**: without seal
  - **UU**: seals on both sides
- **blank**: standard
- **SK**: anti-corrosion※

※For anti-corrosion the load plates are electroless nickel plated with stainless steel balls.

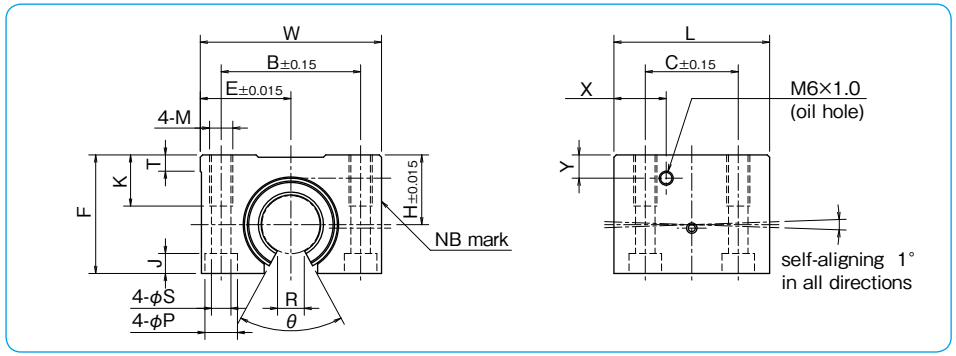

part number	inner contact diameter	major dimensions										mounting dimensions							basic load rating		mass
		H	E	W	L	F	T	R	θ	X	Y	B	C	M	K	S	P	J	dynamic C	static Co	
	mm	mm	mm	mm	mm	mm	mm	mm		mm	mm	mm	mm		mm	mm	mm	mm	N	N	g
TKE12UU	12	18	21.5	43	39	28	5	6.5	66°	14.5	7.5	32	23	M5	11	4.3	8	4.5	1,020	1,290	99
TKE16UU	16	22	26.5	53	43	35	5	9	68°	15.5	9.5	40	26	M6	13	5.3	9.5	5.5	1,250	1,550	175
TKE20UU	20	25	30	60	54	42	5	9	55°	19	9	45	32	M8	18	6.6	11	6.5	2,090	2,630	275
TKE25UU	25	30	39	78	67	51	7	11.5	57°	22.5	10	60	40	M10	22	8.4	14	8.6	3,780	4,720	558
TKE30UU	30	35	43.5	87	79	60	8	14	57°	26	11.5	68	45	M10	22	8.4	14	8.6	5,470	6,810	860
TKE40UU	40	45	54	108	91	77	10	19.5	56°	26.5	14	86	58	M12	26	10.5	17.5	10.8	6,590	8,230	1,490

1N≒0.102kgf

TKE-W TYPE (Euro Standard)

– Double-Wide Open Block Type –

part number structure

example **TKE 30 W UU - SK**

- TKE type
- inner contact diameter
- double-wide type
- seal
  - **blank**: without seal
  - **UU**: seals on both sides
- **blank**: standard
- **SK**: anti-corrosion※

※For anti-corrosion the load plates are electroless nickel plated with stainless steel balls.

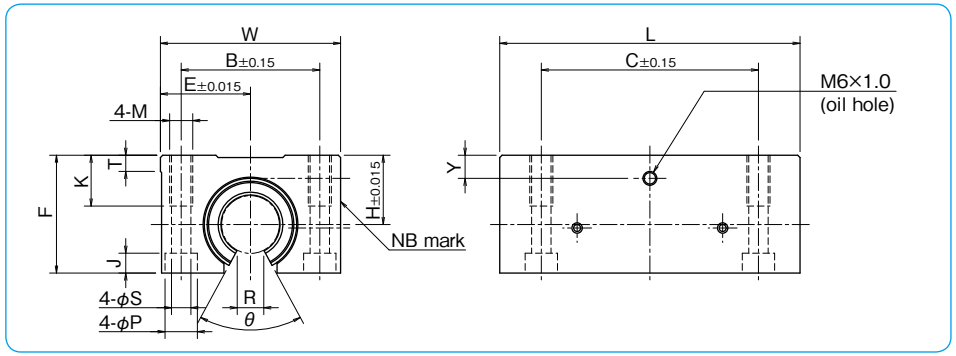

part number	inner contact diameter	major dimensions									mounting dimensions							basic load rating		mass
		H	E	W	L	F	T	R	θ	Y	B	C	M	K	S	P	J	dynamic C	static Co	
	mm	mm	mm	mm	mm	mm	mm	mm		mm	mm	mm		mm	mm	mm	mm	N	N	g
TKE12WUU	12	18	21.5	43	76	28	5	6.5	66°	7.5	32	56	M5	11	4.3	8	4.5	1,652	2,580	190
TKE16WUU	16	22	26.5	53	84	35	5	9	68°	9.5	40	64	M6	13	5.3	9.5	5.5	2,025	3,100	312
TKE20WUU	20	25	30	60	104	42	5	9	55°	9	45	76	M8	18	6.6	11	6.5	3,390	5,260	505
TKE25WUU	25	30	39	78	130	51	7	11.5	57°	10	60	94	M10	22	8.4	14	8.6	6,120	9,440	1,050
TKE30WUU	30	35	43.5	87	152	60	8	14	57°	11.5	68	106	M10	22	8.4	14	8.6	8,860	13,620	1,630
TKE40WUU	40	45	54	108	176	77	10	19.5	56°	14	86	124	M12	26	10.5	17.5	10.8	10,680	16,460	2,880

1N≒0.102kgf

www.bergab.ru Берг АБ bergab@ya.ru Тел. (495)-228-06-21, факс (495) 223-3071

www.bergab.ru Берг АБ bergab@ya.ru Тел. (495)-228-06-21, факс (495) 223-3071

TKD TYPE (Euro Standard)

– Clearance Adjustable Open Block Type –

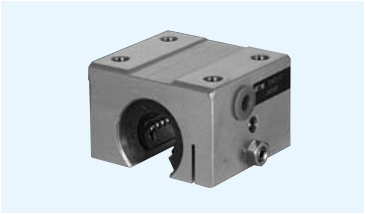

part number structure

example **TKD 30 UU - SK**

- TKD type
- inner contact diameter
- seal: **blank**: without seal; **UU**: seals on both sides
- **blank**: standard; **SK**: anti-corrosion※

※For anti-corrosion the load plates are electroless nickel plated with stainless steel balls.

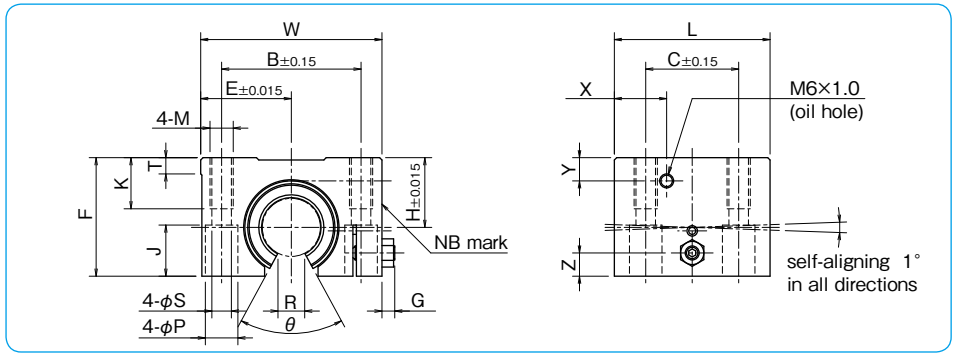

part number	inner contact diameter	major dimensions												mounting dimensions							basic load rating		mass
		H	E	W	L	F	G	Z	T	R	θ	X	Y	B	C	M	K	S	P	J	dynamic C	static Co	
	mm	mm	mm	mm	mm	mm	mm	mm	mm	mm		mm	mm	mm	mm		mm	mm	mm	mm	N	N	g
TKD12UU	12	18	21.5	43	39	28	3.2	5	5	6.5	66°	14.5	7.5	32	23	M5	11	4.3	8	11.5	1,020	1,290	99
TKD16UU	16	22	26.5	53	43	35	3.2	6	5	9	68°	15.5	9.5	40	26	M6	13	5.3	9.5	14	1,250	1,550	175
TKD20UU	20	25	30	60	54	42	4	8	5	9	55°	19	9	45	32	M8	18	6.6	11	18	2,090	2,630	275
TKD25UU	25	30	39	78	67	51	5.5	10	7	11.5	57°	22.5	10	60	40	M10	22	8.4	14	22	3,780	4,720	558
TKD30UU	30	35	43.5	87	79	60	5.5	12	8	14	57°	26	11.5	68	45	M10	22	8.4	14	26	5,470	6,810	860
TKD40UU	40	45	54	108	91	77	5	15	10	19.5	56°	26.5	14	86	58	M12	26	10.5	17.5	33	6,590	8,230	1,490

1N≒0.102kgf

TKD-W TYPE (Euro Standard)

– Clearance Adjustable Double-Wide Open Block Type –

part number structure

example **TKD 30 W UU - SK**

- TKD type
- inner contact diameter
- double-wide type
- seal: **blank**: without seal; **UU**: seals on both sides
- **blank**: standard; **SK**: anti-corrosion※

※For anti-corrosion the load plates are electroless nickel plated with stainless steel balls.

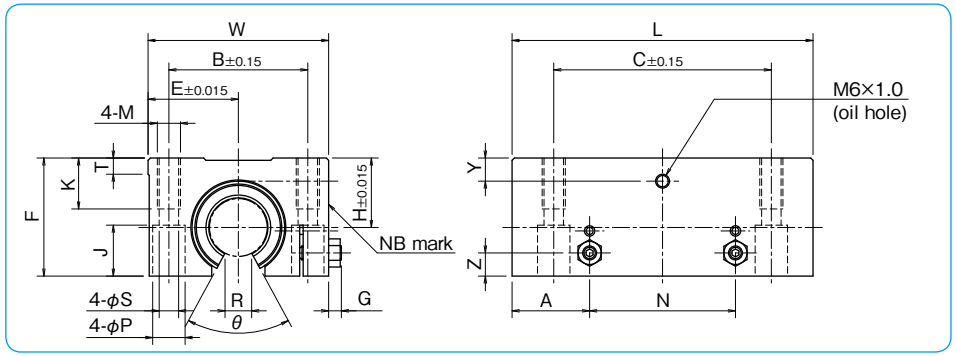

part number	inner contact diameter	major dimensions													mounting dimensions							basic load rating		mass
		H	E	W	L	F	G	Z	A	N	T	R	θ	Y	B	C	M	K	S	P	J	dynamic C	static Co	
	mm	mm	mm	mm	mm	mm	mm	mm	mm	mm	mm	mm		mm	mm	mm		mm	mm	mm	mm	N	N	g
TKD12WUU	12	18	21.5	43	76	28	3.2	5	19.5	37	5	6.5	66°	7.5	32	56	M5	11	4.3	8	11.5	1,652	2,580	190
TKD16WUU	16	22	26.5	53	84	35	3.2	6	21.5	41	5	9	68°	9.5	40	64	M6	13	5.3	9.5	14	2,025	3,100	312
TKD20WUU	20	25	30	60	104	42	4	8	27	50	5	9	55°	9	45	76	M8	18	6.6	11	18	3,390	5,260	505
TKD25WUU	25	30	39	78	130	51	5.5	10	33.5	63	7	11.5	57°	10	60	94	M10	22	8.4	14	22	6,120	9,440	1,050
TKD30WUU	30	35	43.5	87	152	60	5.5	12	39.5	73	8	14	57°	11.5	68	106	M10	22	8.4	14	26	8,860	13,620	1,630
TKD40WUU	40	45	54	108	176	77	5	15	45.5	85	10	19.5	56°	14	86	124	M12	26	10.5	17.5	33	10,680	16,460	2,880

1N≒0.102kgf

www.bergab.ru Берг АБ bergab@ya.ru Тел. (495)-228-06-21, факс (495) 223-3071

www.bergab.ru Берг АБ bergab@ya.ru Тел. (495)-228-06-21, факс (495) 223-3071

TWA TYPE (Inch Standard)

– Block Type –

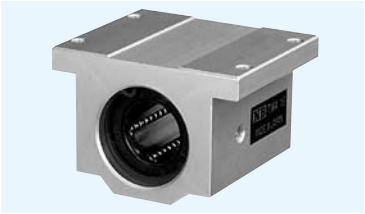

part number structure

example **TWA 20 UU - SK**

- TWA type
- size
- seal: **blank**: without seal; **UU**: seals on both sides
- **blank**: standard; **SK**: anti-corrosion※

※For anti-corrosion the load plates are electroless nickel plated with stainless steel balls.

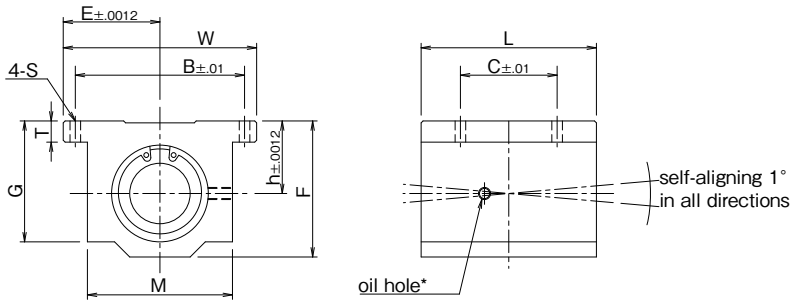

part number	nom. shaft dia.	major dimensions								mounting dimensions			basic load rating		mass
		h	E	W	L	F	T	G	M	B	C	S	dynamic C	static Co	
	inch	inch	inch	inch	inch	inch	inch	inch	inch	inch	inch	inch	lbf	lbf	lbs
TWA 4UU	1/4	.4370	.8125	1.625	1.188	.813	.188	.750	1.000	1.312	.750	.156	60	80	.090
TWA 6UU	3/8	.5000	.8750	1.750	1.313	.938	.188	.875	1.125	1.437	.875	.156	95	120	.120
TWA 8UU	1/2	.6870	1.0000	2.000	1.688	1.250	.250	1.125	1.375	1.688	1.000	.156	230	290	.248
TWA 10UU	5/8	.8750	1.2500	2.500	1.938	1.625	.281	1.437	1.750	2.125	1.125	.188	400	500	.465
TWA 12UU	3/4	.9370	1.3750	2.750	2.063	1.750	.313	1.563	1.875	2.375	1.250	.188	470	590	.553
TWA 16UU	1	1.1870	1.6250	3.250	2.813	2.188	.375	1.938	2.375	2.875	1.750	.219	850	1060	1.200
TWA 20UU	1-1/4	1.5000	2.0000	4.000	3.625	2.813	.438	2.500	3.000	3.500	2.000	.219	1230	1530	2.380
TWA 24UU	1-1/2	1.7500	2.3750	4.750	4.000	3.250	.500	2.875	3.500	4.125	2.500	.281	1480	1850	3.460
TWA 32UU	2	2.1250	3.0000	6.000	5.000	4.063	.625	3.625	4.500	5.250	3.250	.406	2430	3040	6.830

* Provided with push-in oil fitting for 1/4" to 1/2" sizes. Sizes from 5/8" to 2" offer a 1/4-28 tapped hole with a plug for adding a fitting if desired.

1inch=25.4mm
1lbs≒0.454kg
1lbf≒4.448N

TWA-W TYPE (Inch Standard)

– Double-Wide Block Type –

part number structure

example **TWA 20 W UU - SK**

- TWA type
- size
- double-wide type
- seal: **blank**: without seal; **UU**: seals on both sides
- **blank**: standard; **SK**: anti-corrosion※

※For anti-corrosion the load plates are electroless nickel plated with stainless steel balls.

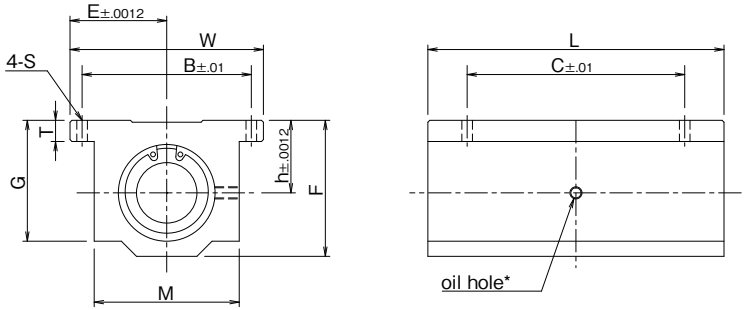

part number	nom. shaft dia.	major dimensions								mounting dimensions			basic load rating		mass
		h	E	W	L	F	T	G	M	B	C	S	dynamic C	static Co	
	inch	inch	inch	inch	inch	inch	inch	inch	inch	inch	inch	inch	lbf	lbf	lbs
TWA 4WUU	1/4	.4370	.8125	1.625	2.500	.813	.188	.750	1.000	1.312	2.000	.156	96	160	.190
TWA 6WUU	3/8	.5000	.8750	1.750	2.750	.938	.188	.875	1.125	1.437	2.250	.156	150	240	.250
TWA 8WUU	1/2	.6870	1.0000	2.000	3.500	1.250	.250	1.125	1.375	1.688	2.500	.156	370	580	.510
TWA 10WUU	5/8	.8750	1.2500	2.500	4.000	1.625	.281	1.437	1.750	2.125	3.000	.188	640	1000	1.000
TWA 12WUU	3/4	.9370	1.3750	2.750	4.500	1.750	.313	1.563	1.875	2.375	3.500	.188	750	1180	1.200
TWA 16WUU	1	1.1870	1.6250	3.250	6.000	2.188	.375	1.938	2.375	2.875	4.500	.219	1360	2120	2.400
TWA 20WUU	1-1/4	1.5000	2.0000	4.000	7.500	2.813	.438	2.500	3.000	3.500	5.500	.219	1970	3060	5.000
TWA 24WUU	1-1/2	1.7500	2.3750	4.750	9.000	3.250	.500	2.875	3.500	4.125	6.500	.281	2370	3700	7.800

* Provided with push-in oil fitting for 1/4" to 1/2" sizes. Sizes from 5/8" to 1-1/2" offer a 1/4-28 tapped hole with a plug for adding a fitting if desired.

1inch=25.4mm
1lbs≒0.454kg
1lbf≒4.448N

www.bergab.ru Берг АБ bergab@ya.ru Тел. (495)-228-06-21, факс (495) 223-3071

www.bergab.ru Берг АБ bergab@ya.ru Тел. (495)-228-06-21, факс (495) 223-3071

TWJ TYPE (Inch Standard)

— Clearance Adjustable Block Type —

part number structure

example **TWJ 20 UU - SK**

- TWJ type
- size
- seal: **blank**: without seal; **UU**: seals on both sides
- **blank**: standard; **SK**: anti-corrosion※

※For anti-corrosion the load plates are electroless nickel plated with stainless steel balls.

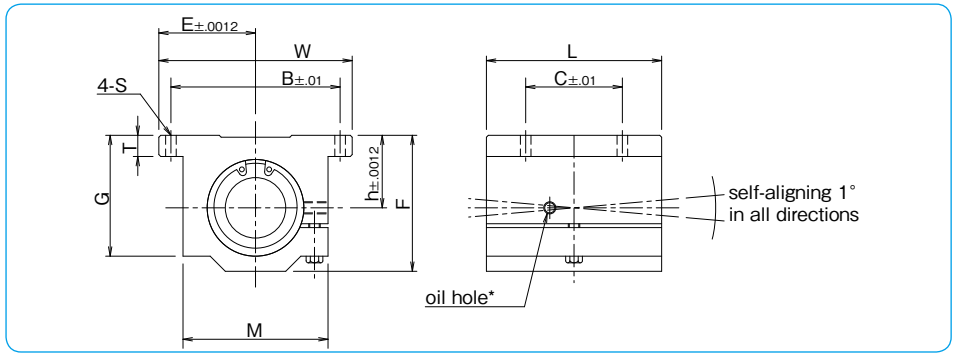

part number	nom. shaft dia.	major dimensions h	E	W	L	F	T	G	M	mounting dimensions B	C	S	basic load rating dynamic C	static Co	mass
	inch	inch	inch	inch	inch	inch	inch	inch	inch	inch	inch	inch	lbf	lbf	lbs
TWJ 4UU	1/4	.4370	.8125	1.625	1.188	.813	.188	.750	1.000	1.312	.750	.156	60	80	.090
TWJ 6UU	3/8	.5000	.8750	1.750	1.313	.938	.188	.875	1.125	1.437	.875	.156	95	120	.120
TWJ 8UU	1/2	.6870	1.0000	2.000	1.688	1.250	.250	1.125	1.375	1.688	1.000	.156	230	290	.248
TWJ 10UU	5/8	.8750	1.2500	2.500	1.938	1.625	.281	1.437	1.750	2.125	1.125	.188	400	500	.465
TWJ 12UU	3/4	.9370	1.3750	2.750	2.063	1.750	.313	1.563	1.875	2.375	1.250	.188	470	590	.553
TWJ 16UU	1	1.1870	1.6250	3.250	2.813	2.188	.375	1.938	2.375	2.875	1.750	.219	850	1060	1.200
TWJ 20UU	1-1/4	1.5000	2.0000	4.000	3.625	2.813	.438	2.500	3.000	3.500	2.000	.219	1230	1530	2.380
TWJ 24UU	1-1/2	1.7500	2.3750	4.750	4.000	3.250	.500	2.875	3.500	4.125	2.500	.281	1480	1850	3.460
TWJ 32UU	2	2.1250	3.0000	6.000	5.000	4.063	.625	3.625	4.500	5.250	3.250	.406	2430	3040	6.830

* Provided with push-in oil fitting for 1/4" to 1/2" size. Sizes from 5/8" to 2" offer a 1/4-28 tapped hole with a plug for adding a fitting if desired.

1inch=25.4mm
1lbs≒0.454kg
1lbf≒4.448N

TWJ-W TYPE (Inch Standard)

— Clearance Adjustable Double-Wide Block Type —

part number structure

example **TWJ 20 W UU - SK**

- TWJ type
- size
- double-wide type
- seal: **blank**: without seal; **UU**: seals on both sides
- **blank**: standard; **SK**: anti-corrosion※

※For anti-corrosion the load plates are electroless nickel plated with stainless steel balls.

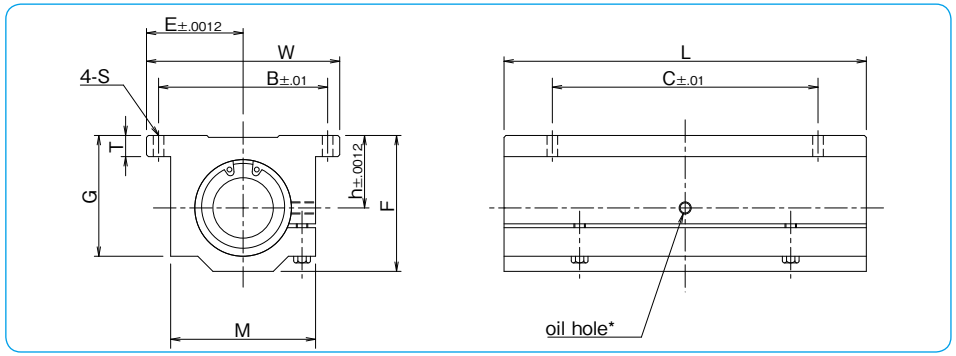

part number	nom. shaft dia.	major dimensions h	E	W	L	F	T	G	M	mounting dimensions B	C	S	basic load rating dynamic C	static Co	mass
	inch	inch	inch	inch	inch	inch	inch	inch	inch	inch	inch	inch	lbf	lbf	lbs
TWJ 4WUU	1/4	.4370	.8125	1.625	2.500	.813	.188	.750	1.000	1.312	2.000	.156	96	160	.190
TWJ 6WUU	3/8	.5000	.8750	1.750	2.750	.938	.188	.875	1.125	1.437	2.250	.156	150	240	.250
TWJ 8WUU	1/2	.6870	1.0000	2.000	3.500	1.250	.250	1.125	1.375	1.688	2.500	.156	370	580	.510
TWJ 10WUU	5/8	.8750	1.2500	2.500	4.000	1.625	.281	1.437	1.750	2.125	3.000	.188	640	1000	1.000
TWJ 12WUU	3/4	.9370	1.3750	2.750	4.500	1.750	.313	1.563	1.875	2.375	3.500	.188	750	1180	1.200
TWJ 16WUU	1	1.1870	1.6250	3.250	6.000	2.188	.375	1.938	2.375	2.875	4.500	.219	1360	2120	2.400
TWJ 20WUU	1-1/4	1.5000	2.0000	4.000	7.500	2.813	.438	2.500	3.000	3.500	5.500	.219	1970	3060	5.000
TWJ 24WUU	1-1/2	1.7500	2.3750	4.750	9.000	3.250	.500	2.875	3.500	4.125	6.500	.281	2370	3700	7.800

* Provided with push-in oil fitting for 1/4" to 1/2" size. Sizes from 5/8" to 2" offer a 1/4-28 tapped hole with a plug for adding a fitting if desired.

1inch=25.4mm
1lbs≒0.454kg
1lbf≒4.448N

www.bergab.ru Берг АБ bergab@ya.ru Тел. (495)-228-06-21, факс (495) 223-3071

www.bergab.ru Берг АБ bergab@ya.ru Тел. (495)-228-06-21, факс (495) 223-3071

TWD TYPE (Inch Standard)

— Open Block Type —

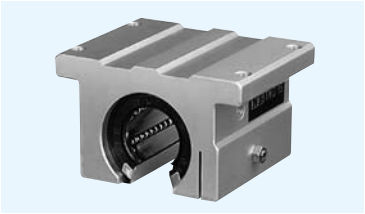

part number structure

example **TWD 20 UU - SK**

- TWD type
- size
- seal
  - **blank**: without seal
  - **UU**: seals on both sides
- **blank**: standard
- **SK**: anti-corrosion※

※For anti-corrosion the load plates are electroless nickel plated with stainless steel balls.

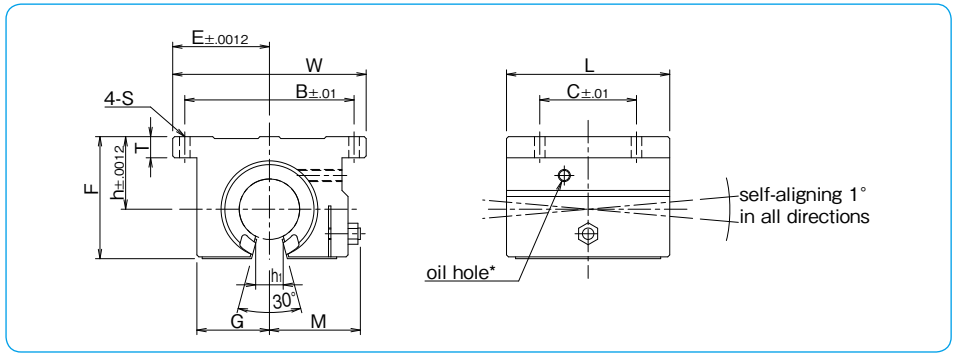

part number	nom. shaft dia. inch	major dimensions h inch	E inch	W inch	L inch	F inch	T inch	G inch	M inch	h1 inch	mounting dimensions B inch	C inch	S inch	basic load rating dynamic C lbf	static Co lbf	mass lbs
TWD 8UU	1/2	.6870	1.000	2.000	1.500	1.100	.250	.688	.86	.260	1.688	1.000	.156	230	290	.188
TWD 10UU	5/8	.8750	1.2500	2.500	1.750	1.405	.281	.875	1.06	.319	2.125	1.125	.188	400	500	.365
TWD 12UU	3/4	.9370	1.3750	2.750	1.875	1.535	.315	.937	1.12	.386	2.375	1.250	.188	470	590	.452
TWD 16UU	1	1.1870	1.6250	3.250	2.625	1.975	.375	1.188	1.40	.512	2.875	1.750	.218	850	1060	1.010
TWD 20UU	1-1/4	1.5000	2.0000	4.000	3.375	2.485	.437	1.500	1.88	.596	3.500	2.000	.218	1230	1530	1.980
TWD 24UU	1-1/2	1.7500	2.3750	4.750	3.750	2.910	.500	1.750	2.12	.681	4.125	2.500	.281	1480	1850	2.950
TWD 32UU	2	2.1250	3.0000	6.000	4.750	3.660	.625	2.250	2.70	.933	5.250	3.250	.406	2430	3040	5.840

* Provided with push-in oil fitting for 1/4" to 1/2" size. Sizes from 5/8" to 2" offer a 1/4-28 tapped hole with a plug for adding a fitting if desired.

1inch=25.4mm
1lbs≒0.454kg
1lbf≒4.448N

TWD-W TYPE (Inch Standard)

— Double-Wide Open Block Type —

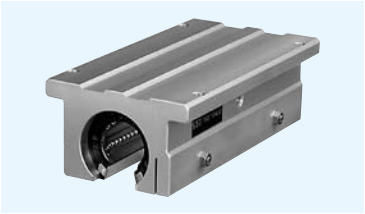

part number structure

example **TWD 20 W UU - SK**

- TWD type
- size
- double-wide type
- seal
  - **blank**: without seal
  - **UU**: seals on both sides
- **blank**: standard
- **SK**: anti-corrosion※

※For anti-corrosion the load plates are electroless nickel plated with stainless steel balls.

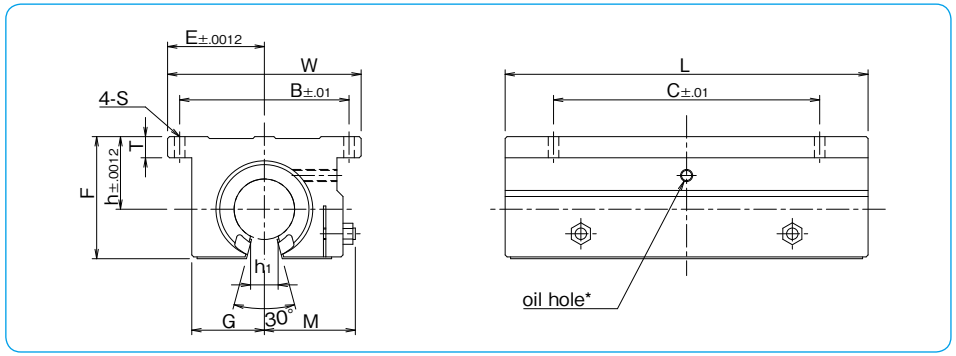

part number	nom. shaft dia. inch	major dimensions h inch	E inch	W inch	L inch	F inch	T inch	G inch	M inch	h1 inch	mounting dimensions B inch	C inch	S inch	basic load rating dynamic C lbf	static Co lbf	mass lbs
TWD 8WUU	1/2	.6870	1.000	2.000	3.500	1.100	.250	.688	.86	.260	1.688	2.500	.156	370	580	.400
TWD 10WUU	5/8	.8750	1.2500	2.500	4.000	1.405	.281	.875	1.06	.319	2.125	3.000	.188	640	1000	.800
TWD 12WUU	3/4	.9370	1.3750	2.750	4.500	1.535	.315	.937	1.12	.386	2.375	3.500	.188	750	1180	1.000
TWD 16WUU	1	1.1870	1.6250	3.250	6.000	1.975	.375	1.188	1.40	.512	2.875	4.500	.218	1360	2120	2.000
TWD 20WUU	1-1/4	1.5000	2.0000	4.000	7.500	2.485	.437	1.500	1.88	.569	3.500	5.500	.218	1970	3060	4.200
TWD 24WUU	1-1/2	1.7500	2.3750	4.750	9.000	2.910	.500	1.750	2.12	.681	4.125	6.500	.281	2370	3700	6.700

* Provided with push-in oil fitting for 1/4" to 1/2" size. Sizes from 5/8" to 2" offer a 1/4-28 tapped hole with a plug for adding a fitting if desired.

1inch=25.4mm
1lbs≒0.454kg
1lbf≒4.448N

www.bergab.ru Берг АБ bergab@ya.ru Тел. (495)-228-06-21, факс (495) 223-3071

www.bergab.ru Берг АБ bergab@ya.ru Тел. (495)-228-06-21, факс (495) 223-3071

TK TYPE
– TOPBALL Metric Type –

TK type

TK-OP type

part number structure

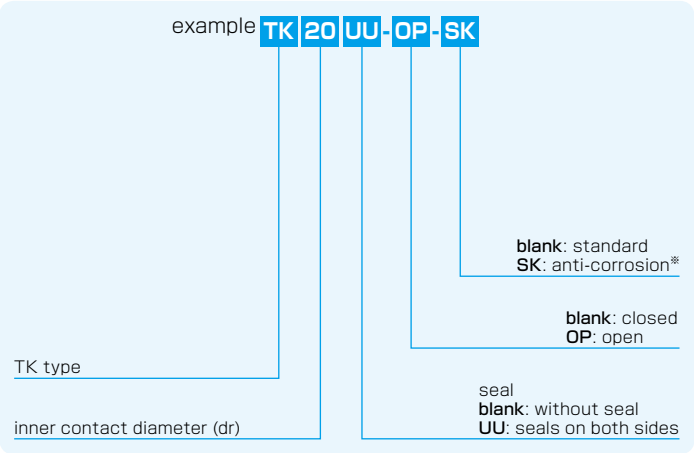

※For anti-corrosion the load plates are electroless nickel plated with stainless steel balls.

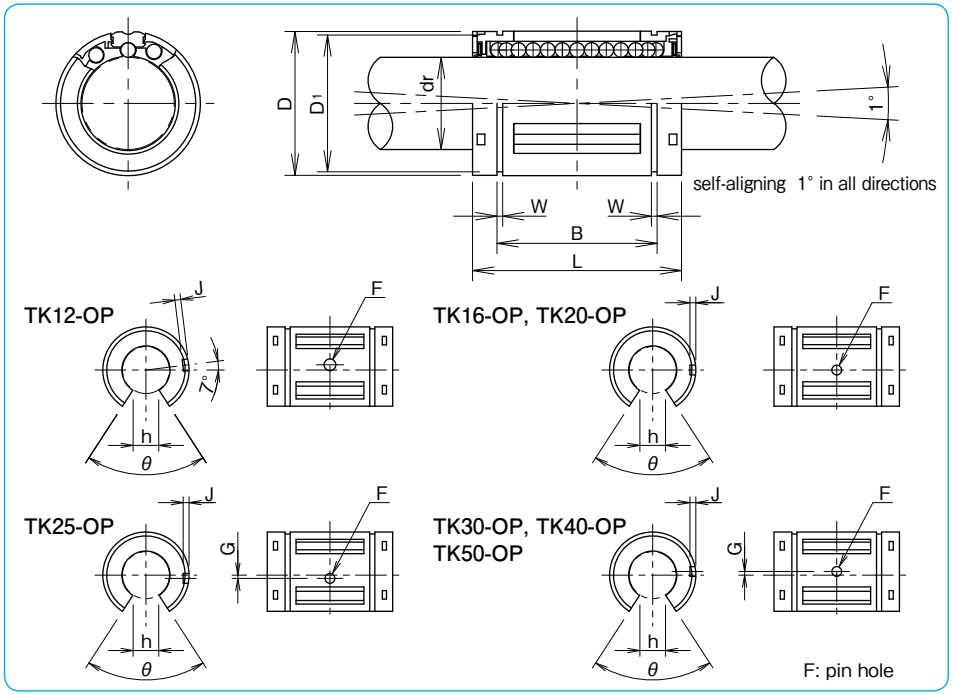

part number						major dimensions				
closed type			open type			dr*		D	L	
	number of ball circuits	mass g		number of ball circuits	mass g	mm	tolerance μm	mm	mm	tolerance mm
TK 8	4	7.3	–	–	–	8	+8 0	16	25	±0.2
TK10	5	14	–	–	–	10		19	29	
TK12	5	21	TK12-OP	4	17	12		22	32	
TK16	5	43	TK16-OP	4	35	16	+9 −1	26	36	
TK20	6	58	TK20-OP	5	48	20		32	45	
TK25	6	123	TK25-OP	5	103	25	+11 −1	40	58	
TK30	6	216	TK30-OP	5	177	30		47	68	
TK40	6	333	TK40-OP	5	275	40	+13 −2	62	80	
TK50	6	618	TK50-OP	5	520	50		75	100	

* Based on nominal housing bore

** One-sided seal is also available. Please contact NB for details.

B		W	D1	open type					basic load rating		shaft diameter
mm	tolerance mm	mm	mm	h mm	θ	F H11 mm	G mm	J mm	dynamic C N	static Co N	mm
16.5	0 −0.2	1.1	15.2	–	–	–	–	–	423	534	8
22.0		1.3	18	–	–	–	–	–	750	935	10
22.9		1.3	21	6.5	66°	3	–	0.7	1,020	1,290	12
24.9		1.3	24.9	9	68°		–	1.0	1,250	1,550	16
31.5		1.6	30.3	9	55°		–	1.0	2,090	2,630	20
44.1	0 −0.3	1.85	37.5	11.5	57°		1.5	1.5	3,780	4,720	25
52.1		1.85	44.5	14	57°		2	1.7	5,470	6,810	30
60.6		2.15	59	19.5	56°		1.5	2.4	6,590	8,230	40
77.6		2.65	72	22.5	54°	5	2.5	2.7	10,800	13,500	50

1N≒0.102kgf

www.bergab.ru Берг АБ bergab@ya.ru Тел. (495)-228-06-21, факс (495) 223-3071

www.bergab.ru Берг АБ bergab@ya.ru Тел. (495)-228-06-21, факс (495) 223-3071

TW TYPE

– TOPBALL Inch Type –

TW type

TW-OP type

part number structure

example **TW 20 UU - OP - SK**

- TW type
- size
- seal
  - blank: without seal
  - UU: seals on both sides
- blank: closed
  - OP: open
- blank: standard
  - SK: anti-corrosion※

※For anti-corrosion the load plates are electroless nickel plated with stainless steel balls.

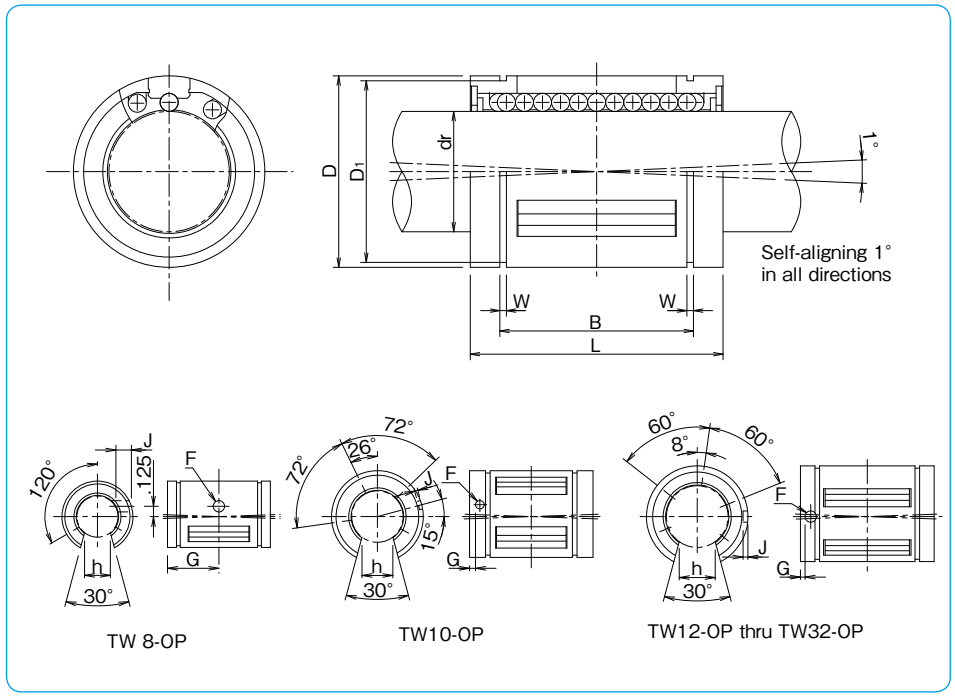

part number						major dimensions				
closed type			open type			dr*		D	L	
	number of ball circuits	mass lbs		number of ball circuits	mass lbs	inch	tolerance inch	inch	inch	tolerance inch
TW 3	4	.004	–	–	–	.1875	0 -.0005	.3750	.562	±.008
TW 4	4	.009	–	–	–	.2500		.5000	.750	0 -.015
TW 6	4	.014	–	–	–	.3750		.6250	.875	
TW 8	4	.043	TW 8-OP	3	.033	.5000		.8750	1.250	0 -020
TW 10	5	.103	TW 10-OP	4	.083	.6250		1.1250	1.500	
TW 12	6	.123	TW 12-OP	5	.102	.7500		1.2500	1.625	
TW 16	6	.265	TW 16-OP	5	.220	1.0000		1.5625	2.250	
TW 20	6	.485	TW 20-OP	5	.419	1.2500	0 -.0006	2.0000	2.625	0/-.025
TW 24	6	.750	TW 24-OP	5	.639	1.5000		2.3750	3.000	0/-.030
TW 32	6	1.411	TW 32-OP	5	1.168	2.0000	0/-.0008	3.0000	4.000	0/-.040

B		W	D1	open type				basic load rating		nominal
								dynamic	static	shaft diameter
inch	tolerance inch	inch	inch	h inch	F inch	G inch	J inch	C lbf	Co lbf	inch
–	–	–	–	–	–	–	–	35	47	3/16
.515	0 -.015	.0390	.4687	–	–	–	–	60	80	1/4
.703		.0390	.5880	–	–	–	–	95	120	3/8
1.032	0 -.020	.0459	.8209	.313	.136	.6250	through	230	290	1/2
1.112		.0559	1.0590	.375	.105	.1250	.0390	400	500	5/8
1.272		.0559	1.1760	.438	.136	.1250	.0590	470	590	3/4
1.886		.0679	1.4687	.563	.136	.1250	.0470	850	1,060	1
2.011	0/-.025	.0679	1.8859	.625	.201	.1875	.0900	1,230	1,530	1-1/4
2.422	0/-.030	.0859	2.2389	.750	.201	.1875	.0900	1,480	1,850	1-1/2
3.206	0/-.040	.1029	2.8379	1.000	.265	.3125	through	2,430	3,040	2

* Based on nominal housing bore
** Seals are not available on TW3.
*** One-sided seal is also available. Please contact NB for details.

1inch=25.4mm
1lbs≒0.454kg
1lbf≒4.448N

www.bergab.ru Берг АБ bergab@ya.ru Тел. (495)-228-06-21, факс (495) 223-3071

www.bergab.ru Берг АБ bergab@ya.ru Тел. (495)-228-06-21, факс (495) 223-3071

TKA TYPE (Euro Standard)

– Block Type –

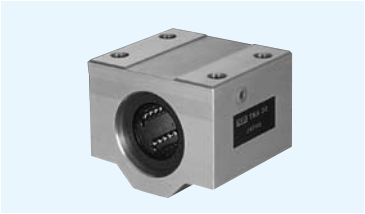

part number structure

example **TKA 30 UU - SK**

- TKA type
- inner contact diameter
- seal
  - **blank**: without seal
  - **UU**: seals on both sides
- **blank**: standard
- **SK**: anti-corrosion※

※For anti-corrosion the load plates are electroless nickel plated with stainless steel balls.

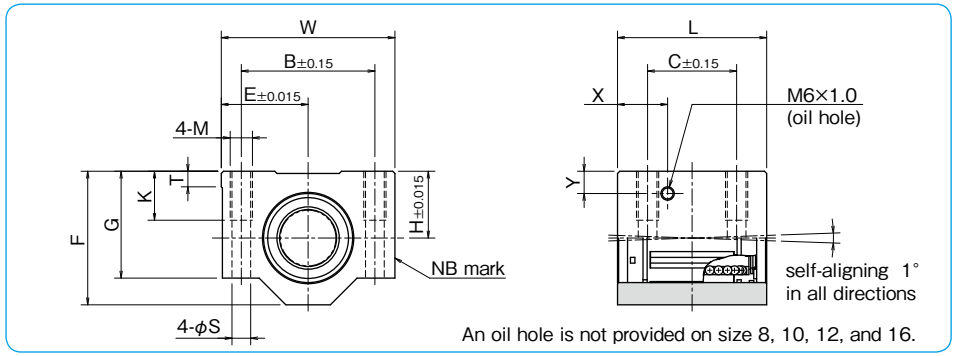

part number	inner contact diameter	major dimensions									mounting dimensions					basic load rating		mass
		H	E	W	L	F	G	T	X	Y	B	C	M	K	S	dynamic C	static Co	
	mm	mm	mm	mm	mm	mm	mm	mm	mm	mm	mm	mm		mm	mm	N	N	g
TKA 8UU	8	15	17.5	35	32	28	22	5	–	–	25	20	M4	9	3.3	423	534	59
TKA10UU	10	16	20	40	36	31.5	25	5	–	–	29	20	M5	11	4.3	750	935	90
TKA12UU	12	18	21.5	43	39	35	28	5	–	–	32	23	M5	11	4.3	1,020	1,290	116
TKA16UU	16	22	26.5	53	43	42	35	5	–	–	40	26	M6	13	5.3	1,250	1,550	205
TKA20UU	20	25	30	60	54	50	42	5	19	9	45	32	M8	18	6.6	2,090	2,630	326
TKA25UU	25	30	39	78	67	60	48	7	22.5	10	60	40	M10	22	8.4	3,780	4,720	624
TKA30UU	30	35	43.5	87	79	70	58	8	26	11.5	68	45	M10	22	8.4	5,470	6,810	980
TKA40UU	40	45	54	108	91	90	72	10	26.5	14	86	58	M12	26	10.5	6,590	8,230	1,670

1N≒0.102kgf

TKA-W TYPE (Euro Standard)

– Double-Wide Block Type –

part number structure

example **TKA 30 W UU - SK**

- TKA type
- inner contact diameter
- double-wide type
- seal
  - **blank**: without seal
  - **UU**: seals on both sides
- **blank**: standard
- **SK**: anti-corrosion※

※For anti-corrosion the load plates are electroless nickel plated with stainless steel balls.

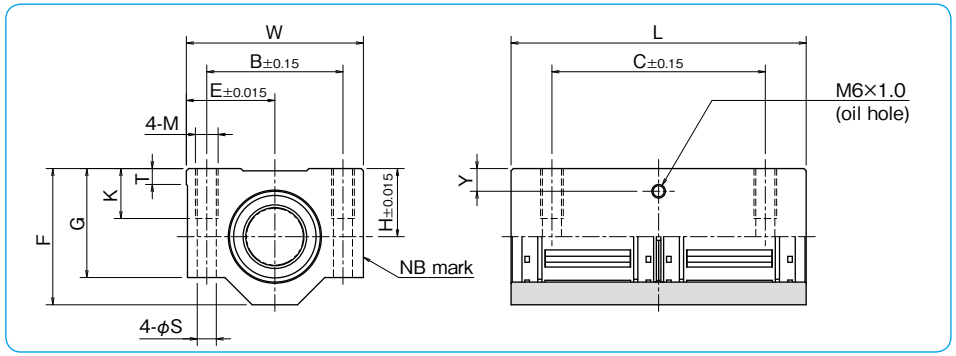

part number	inner contact diameter	major dimensions								mounting dimensions					basic load rating		mass
		H	E	W	L	F	G	T	Y	B	C	M	K	S	dynamic C	static Co	
	mm	mm	mm	mm	mm	mm	mm	mm	mm	mm	mm		mm	mm	N	N	g
TKA 8WUU	8	15	17.5	35	62	28	22	5	6.5	25	50	M4	9	3.3	685	1,068	119
TKA10WUU	10	16	20	40	70	31.5	25	5	7	29	52	M5	11	4.3	1,215	1,870	175
TKA12WUU	12	18	21.5	43	76	35	28	5	7.5	32	56	M5	11	4.3	1,652	2,580	227
TKA16WUU	16	22	26.5	53	84	42	35	5	9.5	40	64	M6	13	5.3	2,025	3,100	390
TKA20WUU	20	25	30	60	104	50	42	5	9	45	76	M8	18	6.6	3,390	5,260	630
TKA25WUU	25	30	39	78	130	60	48	7	10	60	94	M10	22	8.4	6,120	9,440	1,210
TKA30WUU	30	35	43.5	87	152	70	58	8	11.5	68	106	M10	22	8.4	8,860	13,620	1,880
TKA40WUU	40	45	54	108	176	90	72	10	14	86	124	M12	26	10.5	10,680	16,460	3,280

1N≒0.102kgf

www.bergab.ru Берг АБ bergab@ya.ru Тел. (495)-228-06-21, факс (495) 223-3071

www.bergab.ru Берг АБ bergab@ya.ru Тел. (495)-228-06-21, факс (495) 223-3071

TKE TYPE (Euro Standard)

– Open Block Type –

part number structure

example **TKE 30 UU - SK**

- TKE type
- inner contact diameter
- seal
  - **blank**: without seal
  - **UU**: seals on both sides
- **blank**: standard
- **SK**: anti-corrosion※

※For anti-corrosion the load plates are electroless nickel plated with stainless steel balls.

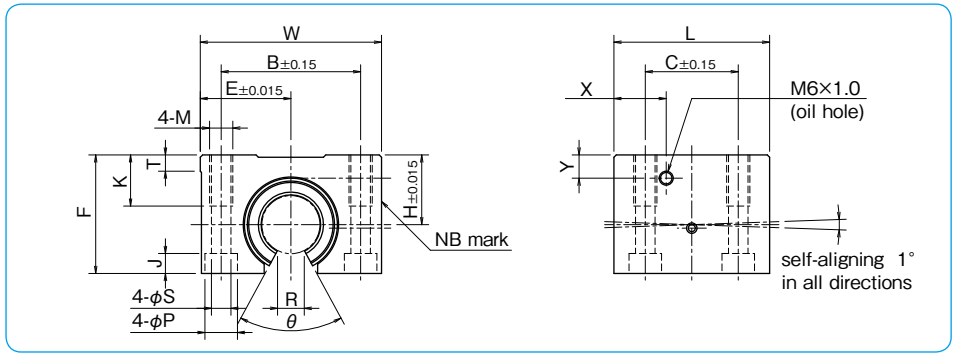

part number	inner contact diameter	major dimensions										mounting dimensions							basic load rating		mass
		H	E	W	L	F	T	R	θ	X	Y	B	C	M	K	S	P	J	dynamic C	static Co	
	mm	mm	mm	mm	mm	mm	mm	mm		mm	mm	mm	mm		mm	mm	mm	mm	N	N	g
TKE12UU	12	18	21.5	43	39	28	5	6.5	66°	14.5	7.5	32	23	M5	11	4.3	8	4.5	1,020	1,290	99
TKE16UU	16	22	26.5	53	43	35	5	9	68°	15.5	9.5	40	26	M6	13	5.3	9.5	5.5	1,250	1,550	175
TKE20UU	20	25	30	60	54	42	5	9	55°	19	9	45	32	M8	18	6.6	11	6.5	2,090	2,630	275
TKE25UU	25	30	39	78	67	51	7	11.5	57°	22.5	10	60	40	M10	22	8.4	14	8.6	3,780	4,720	558
TKE30UU	30	35	43.5	87	79	60	8	14	57°	26	11.5	68	45	M10	22	8.4	14	8.6	5,470	6,810	860
TKE40UU	40	45	54	108	91	77	10	19.5	56°	26.5	14	86	58	M12	26	10.5	17.5	10.8	6,590	8,230	1,490

1N≒0.102kgf

TKE-W TYPE (Euro Standard)

– Double-Wide Open Block Type –

part number structure

example **TKE 30 W UU - SK**

- TKE type
- inner contact diameter
- double-wide type
- seal
  - **blank**: without seal
  - **UU**: seals on both sides
- **blank**: standard
- **SK**: anti-corrosion※

※For anti-corrosion the load plates are electroless nickel plated with stainless steel balls.

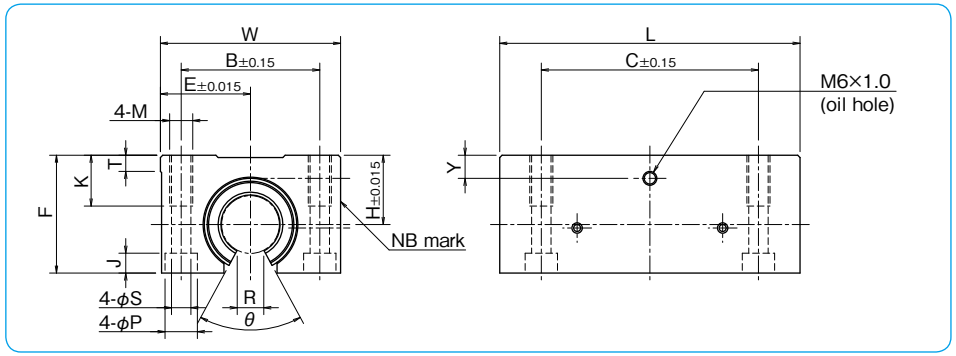

part number	inner contact diameter	major dimensions									mounting dimensions							basic load rating		mass
		H	E	W	L	F	T	R	θ	Y	B	C	M	K	S	P	J	dynamic C	static Co	
	mm	mm	mm	mm	mm	mm	mm	mm		mm	mm	mm		mm	mm	mm	mm	N	N	g
TKE12WUU	12	18	21.5	43	76	28	5	6.5	66°	7.5	32	56	M5	11	4.3	8	4.5	1,652	2,580	190
TKE16WUU	16	22	26.5	53	84	35	5	9	68°	9.5	40	64	M6	13	5.3	9.5	5.5	2,025	3,100	312
TKE20WUU	20	25	30	60	104	42	5	9	55°	9	45	76	M8	18	6.6	11	6.5	3,390	5,260	505
TKE25WUU	25	30	39	78	130	51	7	11.5	57°	10	60	94	M10	22	8.4	14	8.6	6,120	9,440	1,050
TKE30WUU	30	35	43.5	87	152	60	8	14	57°	11.5	68	106	M10	22	8.4	14	8.6	8,860	13,620	1,630
TKE40WUU	40	45	54	108	176	77	10	19.5	56°	14	86	124	M12	26	10.5	17.5	10.8	10,680	16,460	2,880

1N≒0.102kgf

www.bergab.ru Берг АБ bergab@ya.ru Тел. (495)-228-06-21, факс (495) 223-3071

www.bergab.ru Берг АБ bergab@ya.ru Тел. (495)-228-06-21, факс (495) 223-3071

TKD TYPE (Euro Standard)

– Clearance Adjustable Open Block Type –

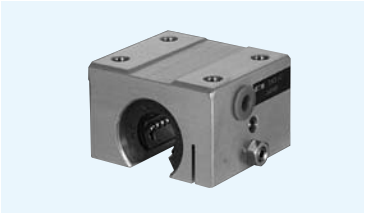

part number structure

example **TKD 30 UU - SK**

- TKD type
- inner contact diameter
- seal: **blank**: without seal; **UU**: seals on both sides
- **blank**: standard; **SK**: anti-corrosion※

※For anti-corrosion the load plates are electroless nickel plated with stainless steel balls.

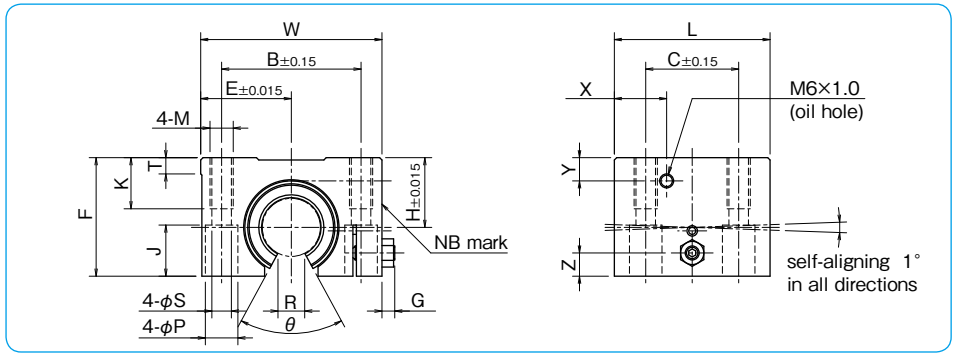

part number	inner contact diameter	major dimensions												mounting dimensions							basic load rating		mass
		H	E	W	L	F	G	Z	T	R	θ	X	Y	B	C	M	K	S	P	J	dynamic C	static Co	
	mm	mm	mm	mm	mm	mm	mm	mm	mm	mm		mm	mm	mm	mm		mm	mm	mm	mm	N	N	g
TKD12UU	12	18	21.5	43	39	28	3.2	5	5	6.5	66°	14.5	7.5	32	23	M5	11	4.3	8	11.5	1,020	1,290	99
TKD16UU	16	22	26.5	53	43	35	3.2	6	5	9	68°	15.5	9.5	40	26	M6	13	5.3	9.5	14	1,250	1,550	175
TKD20UU	20	25	30	60	54	42	4	8	5	9	55°	19	9	45	32	M8	18	6.6	11	18	2,090	2,630	275
TKD25UU	25	30	39	78	67	51	5.5	10	7	11.5	57°	22.5	10	60	40	M10	22	8.4	14	22	3,780	4,720	558
TKD30UU	30	35	43.5	87	79	60	5.5	12	8	14	57°	26	11.5	68	45	M10	22	8.4	14	26	5,470	6,810	860
TKD40UU	40	45	54	108	91	77	5	15	10	19.5	56°	26.5	14	86	58	M12	26	10.5	17.5	33	6,590	8,230	1,490

1N≒0.102kgf

TKD-W TYPE (Euro Standard)

– Clearance Adjustable Double-Wide Open Block Type –

part number structure

example **TKD 30 W UU - SK**

- TKD type
- inner contact diameter
- double-wide type
- seal: **blank**: without seal; **UU**: seals on both sides
- **blank**: standard; **SK**: anti-corrosion※

※For anti-corrosion the load plates are electroless nickel plated with stainless steel balls.

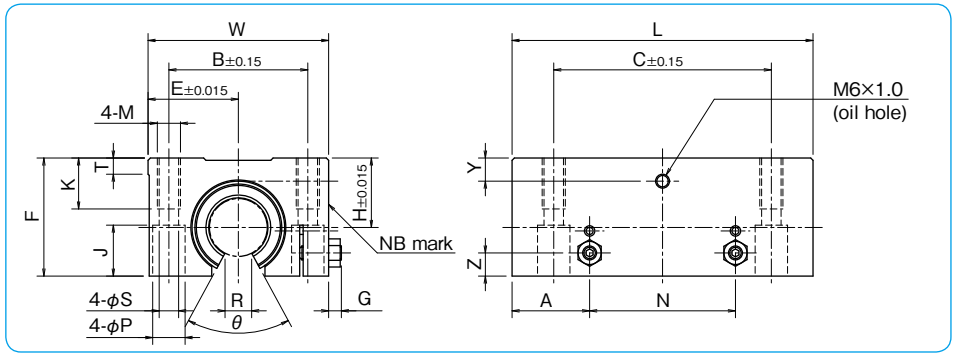

part number	inner contact diameter	major dimensions													mounting dimensions							basic load rating		mass
		H	E	W	L	F	G	Z	A	N	T	R	θ	Y	B	C	M	K	S	P	J	dynamic C	static Co	
	mm	mm	mm	mm	mm	mm	mm	mm	mm	mm	mm	mm		mm	mm	mm		mm	mm	mm	mm	N	N	g
TKD12WUU	12	18	21.5	43	76	28	3.2	5	19.5	37	5	6.5	66°	7.5	32	56	M5	11	4.3	8	11.5	1,652	2,580	190
TKD16WUU	16	22	26.5	53	84	35	3.2	6	21.5	41	5	9	68°	9.5	40	64	M6	13	5.3	9.5	14	2,025	3,100	312
TKD20WUU	20	25	30	60	104	42	4	8	27	50	5	9	55°	9	45	76	M8	18	6.6	11	18	3,390	5,260	505
TKD25WUU	25	30	39	78	130	51	5.5	10	33.5	63	7	11.5	57°	10	60	94	M10	22	8.4	14	22	6,120	9,440	1,050
TKD30WUU	30	35	43.5	87	152	60	5.5	12	39.5	73	8	14	57°	11.5	68	106	M10	22	8.4	14	26	8,860	13,620	1,630
TKD40WUU	40	45	54	108	176	77	5	15	45.5	85	10	19.5	56°	14	86	124	M12	26	10.5	17.5	33	10,680	16,460	2,880

1N≒0.102kgf

www.bergab.ru Берг АБ bergab@ya.ru Тел. (495)-228-06-21, факс (495) 223-3071

www.bergab.ru Берг АБ bergab@ya.ru Тел. (495)-228-06-21, факс (495) 223-3071

TWA TYPE (Inch Standard)

– Block Type –

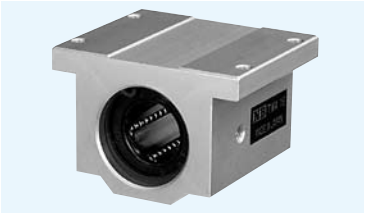

part number structure

example **TWA 20 UU - SK**

- TWA type
- size
- seal: **blank**: without seal; **UU**: seals on both sides
- **blank**: standard; **SK**: anti-corrosion※

※For anti-corrosion the load plates are electroless nickel plated with stainless steel balls.

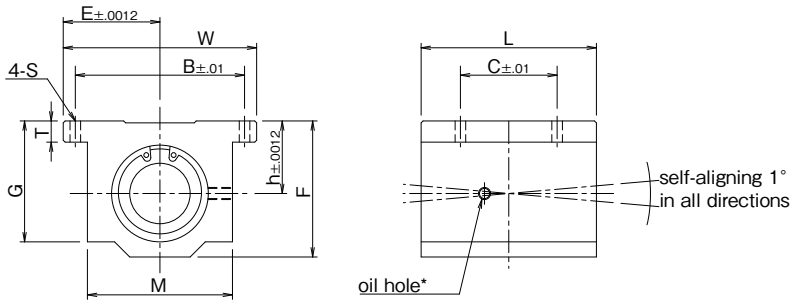

part number	nom. shaft dia.	major dimensions								mounting dimensions			basic load rating		mass
		h	E	W	L	F	T	G	M	B	C	S	dynamic C	static Co	
	inch	inch	inch	inch	inch	inch	inch	inch	inch	inch	inch	inch	lbf	lbf	lbs
TWA 4UU	1/4	.4370	.8125	1.625	1.188	.813	.188	.750	1.000	1.312	.750	.156	60	80	.090
TWA 6UU	3/8	.5000	.8750	1.750	1.313	.938	.188	.875	1.125	1.437	.875	.156	95	120	.120
TWA 8UU	1/2	.6870	1.0000	2.000	1.688	1.250	.250	1.125	1.375	1.688	1.000	.156	230	290	.248
TWA 10UU	5/8	.8750	1.2500	2.500	1.938	1.625	.281	1.437	1.750	2.125	1.125	.188	400	500	.465
TWA 12UU	3/4	.9370	1.3750	2.750	2.063	1.750	.313	1.563	1.875	2.375	1.250	.188	470	590	.553
TWA 16UU	1	1.1870	1.6250	3.250	2.813	2.188	.375	1.938	2.375	2.875	1.750	.219	850	1060	1.200
TWA 20UU	1-1/4	1.5000	2.0000	4.000	3.625	2.813	.438	2.500	3.000	3.500	2.000	.219	1230	1530	2.380
TWA 24UU	1-1/2	1.7500	2.3750	4.750	4.000	3.250	.500	2.875	3.500	4.125	2.500	.281	1480	1850	3.460
TWA 32UU	2	2.1250	3.0000	6.000	5.000	4.063	.625	3.625	4.500	5.250	3.250	.406	2430	3040	6.830

* Provided with push-in oil fitting for 1/4" to 1/2" sizes. Sizes from 5/8" to 2" offer a 1/4-28 tapped hole with a plug for adding a fitting if desired.

1inch=25.4mm
1lbs≒0.454kg
1lbf≒4.448N

TWA-W TYPE (Inch Standard)

– Double-Wide Block Type –

part number structure

example **TWA 20 W UU - SK**

- TWA type
- size
- double-wide type
- seal: **blank**: without seal; **UU**: seals on both sides
- **blank**: standard; **SK**: anti-corrosion※

※For anti-corrosion the load plates are electroless nickel plated with stainless steel balls.

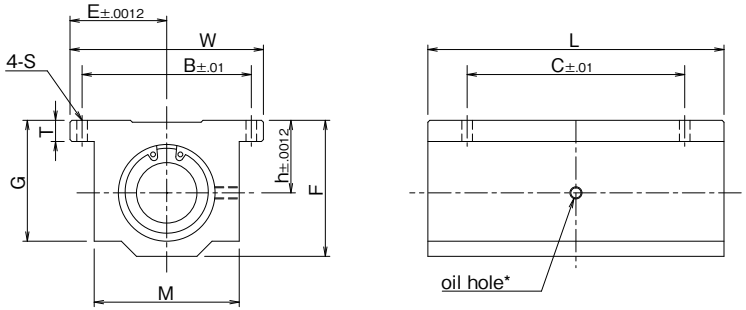

part number	nom. shaft dia.	major dimensions								mounting dimensions			basic load rating		mass
		h	E	W	L	F	T	G	M	B	C	S	dynamic C	static Co	
	inch	inch	inch	inch	inch	inch	inch	inch	inch	inch	inch	inch	lbf	lbf	lbs
TWA 4WUU	1/4	.4370	.8125	1.625	2.500	.813	.188	.750	1.000	1.312	2.000	.156	96	160	.190
TWA 6WUU	3/8	.5000	.8750	1.750	2.750	.938	.188	.875	1.125	1.437	2.250	.156	150	240	.250
TWA 8WUU	1/2	.6870	1.0000	2.000	3.500	1.250	.250	1.125	1.375	1.688	2.500	.156	370	580	.510
TWA 10WUU	5/8	.8750	1.2500	2.500	4.000	1.625	.281	1.437	1.750	2.125	3.000	.188	640	1000	1.000
TWA 12WUU	3/4	.9370	1.3750	2.750	4.500	1.750	.313	1.563	1.875	2.375	3.500	.188	750	1180	1.200
TWA 16WUU	1	1.1870	1.6250	3.250	6.000	2.188	.375	1.938	2.375	2.875	4.500	.219	1360	2120	2.400
TWA 20WUU	1-1/4	1.5000	2.0000	4.000	7.500	2.813	.438	2.500	3.000	3.500	5.500	.219	1970	3060	5.000
TWA 24WUU	1-1/2	1.7500	2.3750	4.750	9.000	3.250	.500	2.875	3.500	4.125	6.500	.281	2370	3700	7.800

* Provided with push-in oil fitting for 1/4" to 1/2" sizes. Sizes from 5/8" to 1-1/2" offer a 1/4-28 tapped hole with a plug for adding a fitting if desired.

1inch=25.4mm
1lbs≒0.454kg
1lbf≒4.448N

www.bergab.ru Берг АБ bergab@ya.ru Тел. (495)-228-06-21, факс (495) 223-3071

www.bergab.ru Берг АБ bergab@ya.ru Тел. (495)-228-06-21, факс (495) 223-3071

TWJ TYPE (Inch Standard)

— Clearance Adjustable Block Type —

part number structure

example **TWJ 20 UU - SK**

- TWJ type
- size
- seal: **blank**: without seal; **UU**: seals on both sides
- **blank**: standard; **SK**: anti-corrosion※

※For anti-corrosion the load plates are electroless nickel plated with stainless steel balls.

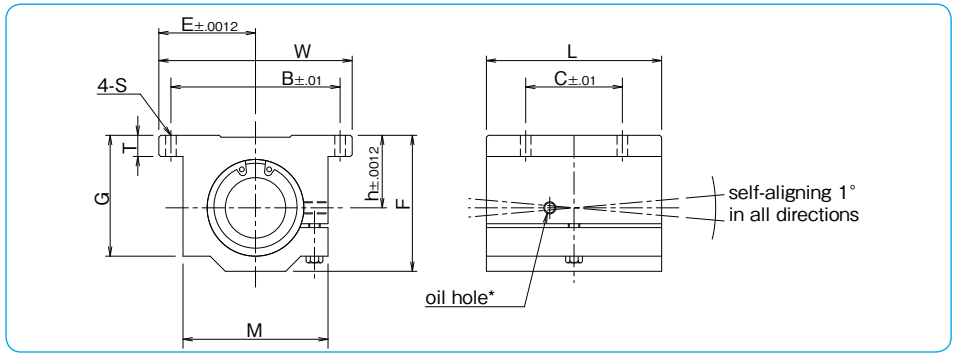

part number	nom. shaft dia.	major dimensions h	E	W	L	F	T	G	M	mounting dimensions B	C	S	basic load rating dynamic C	static Co	mass
	inch	inch	inch	inch	inch	inch	inch	inch	inch	inch	inch	inch	lbf	lbf	lbs
TWJ 4UU	1/4	.4370	.8125	1.625	1.188	.813	.188	.750	1.000	1.312	.750	.156	60	80	.090
TWJ 6UU	3/8	.5000	.8750	1.750	1.313	.938	.188	.875	1.125	1.437	.875	.156	95	120	.120
TWJ 8UU	1/2	.6870	1.0000	2.000	1.688	1.250	.250	1.125	1.375	1.688	1.000	.156	230	290	.248
TWJ 10UU	5/8	.8750	1.2500	2.500	1.938	1.625	.281	1.437	1.750	2.125	1.125	.188	400	500	.465
TWJ 12UU	3/4	.9370	1.3750	2.750	2.063	1.750	.313	1.563	1.875	2.375	1.250	.188	470	590	.553
TWJ 16UU	1	1.1870	1.6250	3.250	2.813	2.188	.375	1.938	2.375	2.875	1.750	.219	850	1060	1.200
TWJ 20UU	1-1/4	1.5000	2.0000	4.000	3.625	2.813	.438	2.500	3.000	3.500	2.000	.219	1230	1530	2.380
TWJ 24UU	1-1/2	1.7500	2.3750	4.750	4.000	3.250	.500	2.875	3.500	4.125	2.500	.281	1480	1850	3.460
TWJ 32UU	2	2.1250	3.0000	6.000	5.000	4.063	.625	3.625	4.500	5.250	3.250	.406	2430	3040	6.830

* Provided with push-in oil fitting for 1/4" to 1/2" size. Sizes from 5/8" to 2" offer a 1/4-28 tapped hole with a plug for adding a fitting if desired.

1inch=25.4mm
1lbs≒0.454kg
1lbf≒4.448N

TWJ-W TYPE (Inch Standard)

— Clearance Adjustable Double-Wide Block Type —

part number structure

example **TWJ 20 W UU - SK**

- TWJ type
- size
- double-wide type
- seal: **blank**: without seal; **UU**: seals on both sides
- **blank**: standard; **SK**: anti-corrosion※

※For anti-corrosion the load plates are electroless nickel plated with stainless steel balls.

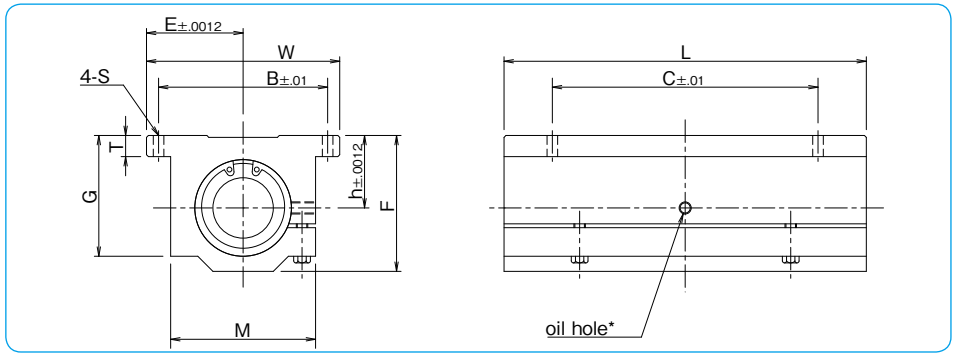

part number	nom. shaft dia.	major dimensions h	E	W	L	F	T	G	M	mounting dimensions B	C	S	basic load rating dynamic C	static Co	mass
	inch	inch	inch	inch	inch	inch	inch	inch	inch	inch	inch	inch	lbf	lbf	lbs
TWJ 4WUU	1/4	.4370	.8125	1.625	2.500	.813	.188	.750	1.000	1.312	2.000	.156	96	160	.190
TWJ 6WUU	3/8	.5000	.8750	1.750	2.750	.938	.188	.875	1.125	1.437	2.250	.156	150	240	.250
TWJ 8WUU	1/2	.6870	1.0000	2.000	3.500	1.250	.250	1.125	1.375	1.688	2.500	.156	370	580	.510
TWJ 10WUU	5/8	.8750	1.2500	2.500	4.000	1.625	.281	1.437	1.750	2.125	3.000	.188	640	1000	1.000
TWJ 12WUU	3/4	.9370	1.3750	2.750	4.500	1.750	.313	1.563	1.875	2.375	3.500	.188	750	1180	1.200
TWJ 16WUU	1	1.1870	1.6250	3.250	6.000	2.188	.375	1.938	2.375	2.875	4.500	.219	1360	2120	2.400
TWJ 20WUU	1-1/4	1.5000	2.0000	4.000	7.500	2.813	.438	2.500	3.000	3.500	5.500	.219	1970	3060	5.000
TWJ 24WUU	1-1/2	1.7500	2.3750	4.750	9.000	3.250	.500	2.875	3.500	4.125	6.500	.281	2370	3700	7.800

* Provided with push-in oil fitting for 1/4" to 1/2" size. Sizes from 5/8" to 2" offer a 1/4-28 tapped hole with a plug for adding a fitting if desired.

1inch=25.4mm
1lbs≒0.454kg
1lbf≒4.448N

www.bergab.ru Берг АБ bergab@ya.ru Тел. (495)-228-06-21, факс (495) 223-3071

www.bergab.ru Берг АБ bergab@ya.ru Тел. (495)-228-06-21, факс (495) 223-3071

TWD TYPE (Inch Standard)

— Open Block Type —

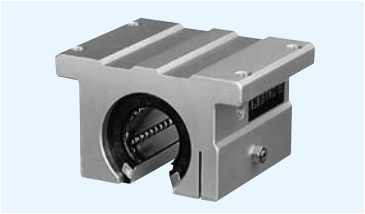

part number structure

example **TWD 20 UU - SK**

- TWD type
- size
- seal
  - **blank**: without seal
  - **UU**: seals on both sides
- **blank**: standard
- **SK**: anti-corrosion※

※For anti-corrosion the load plates are electroless nickel plated with stainless steel balls.

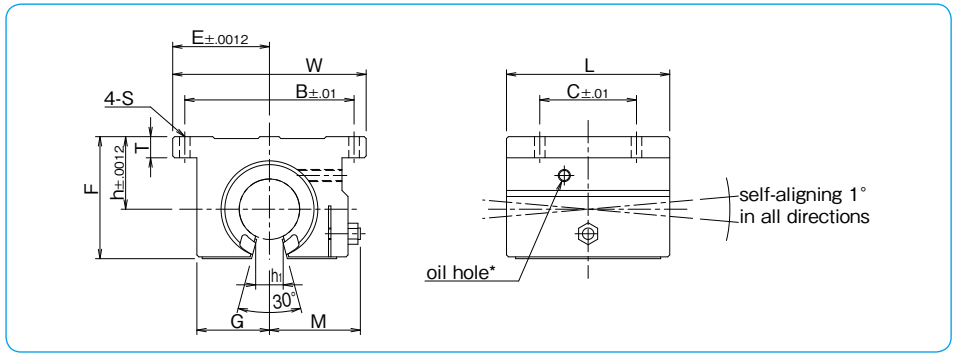

part number	nom. shaft dia. inch	major dimensions h inch	E inch	W inch	L inch	F inch	T inch	G inch	M inch	h1 inch	mounting dimensions B inch	C inch	S inch	basic load rating dynamic C lbf	static Co lbf	mass lbs
TWD 8UU	1/2	.6870	1.000	2.000	1.500	1.100	.250	.688	.86	.260	1.688	1.000	.156	230	290	.188
TWD 10UU	5/8	.8750	1.2500	2.500	1.750	1.405	.281	.875	1.06	.319	2.125	1.125	.188	400	500	.365
TWD 12UU	3/4	.9370	1.3750	2.750	1.875	1.535	.315	.937	1.12	.386	2.375	1.250	.188	470	590	.452
TWD 16UU	1	1.1870	1.6250	3.250	2.625	1.975	.375	1.188	1.40	.512	2.875	1.750	.218	850	1060	1.010
TWD 20UU	1-1/4	1.5000	2.0000	4.000	3.375	2.485	.437	1.500	1.88	.596	3.500	2.000	.218	1230	1530	1.980
TWD 24UU	1-1/2	1.7500	2.3750	4.750	3.750	2.910	.500	1.750	2.12	.681	4.125	2.500	.281	1480	1850	2.950
TWD 32UU	2	2.1250	3.0000	6.000	4.750	3.660	.625	2.250	2.70	.933	5.250	3.250	.406	2430	3040	5.840

* Provided with push-in oil fitting for 1/4" to 1/2" size. Sizes from 5/8" to 2" offer a 1/4-28 tapped hole with a plug for adding a fitting if desired.

1inch=25.4mm
1lbs≒0.454kg
1lbf≒4.448N

TWD-W TYPE (Inch Standard)

— Double-Wide Open Block Type —

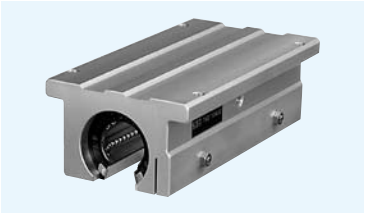

part number structure

example **TWD 20 W UU - SK**

- TWD type
- size
- double-wide type
- seal
  - **blank**: without seal
  - **UU**: seals on both sides
- **blank**: standard
- **SK**: anti-corrosion※

※For anti-corrosion the load plates are electroless nickel plated with stainless steel balls.

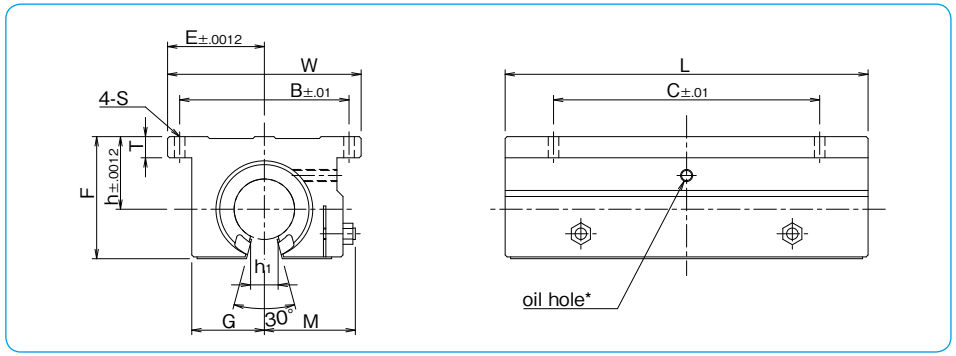

part number	nom. shaft dia. inch	major dimensions h inch	E inch	W inch	L inch	F inch	T inch	G inch	M inch	h1 inch	mounting dimensions B inch	C inch	S inch	basic load rating dynamic C lbf	static Co lbf	mass lbs
TWD 8WUU	1/2	.6870	1.000	2.000	3.500	1.100	.250	.688	.86	.260	1.688	2.500	.156	370	580	.400
TWD 10WUU	5/8	.8750	1.2500	2.500	4.000	1.405	.281	.875	1.06	.319	2.125	3.000	.188	640	1000	.800
TWD 12WUU	3/4	.9370	1.3750	2.750	4.500	1.535	.315	.937	1.12	.386	2.375	3.500	.188	750	1180	1.000
TWD 16WUU	1	1.1870	1.6250	3.250	6.000	1.975	.375	1.188	1.40	.512	2.875	4.500	.218	1360	2120	2.000
TWD 20WUU	1-1/4	1.5000	2.0000	4.000	7.500	2.485	.437	1.500	1.88	.569	3.500	5.500	.218	1970	3060	4.200
TWD 24WUU	1-1/2	1.7500	2.3750	4.750	9.000	2.910	.500	1.750	2.12	.681	4.125	6.500	.281	2370	3700	6.700

* Provided with push-in oil fitting for 1/4" to 1/2" size. Sizes from 5/8" to 2" offer a 1/4-28 tapped hole with a plug for adding a fitting if desired.

1inch=25.4mm
1lbs≒0.454kg
1lbf≒4.448N

www.bergab.ru Берг АБ bergab@ya.ru Тел. (495)-228-06-21, факс (495) 223-3071

www.bergab.ru Берг АБ bergab@ya.ru Тел. (495)-228-06-21, факс (495) 223-3071

STROKE BUSH

SLIDE ROTARY BUSH

www.bergab.ru Берг АБ bergab@ya.ru Тел. (495)-228-06-21, факс (495) 223-3071

www.bergab.ru Берг АБ bergab@ya.ru Тел. (495)-228-06-21, факс (495) 223-3071

STROKE BUSH

The NB stroke bush is a linear and rotational motion mechanism utilizing the rotational motion of ball elements between an outer cylinder and a shaft. It is compact and can withstand high loading. The retainer is made of a light metal alloy with high wear resistance. Smooth motion is achieved under high-speed and high-acceleration conditions.
Although the linear motion is limited to a specific stroke length, the combined rotation and stroke motion is achieved with very little frictional resistance. The NB stroke bush can be conveniently used in a variety of applications.

STRUCTURE AND ADVANTAGES

The retainer in the NB stroke bush positions the ball elements in a zigzag arrangement. The inner surface of the outer cylinder is finished by precision grinding, resulting in smooth motion of the ball elements. Each of the ball elements is held in a separate hole and smooth motion is achieved for both rotational motion and linear motion. The retainer moves half the length of the linear motion, therefore, the stroke length is limited to approximately twice the length the retainer can travel within the outer cylinder. The actual stroke should be limited to 80% of the maximum stroke as listed in the dimension tables.

● High Precision

High-carbon chromium bearing steel is used for the outer cylinder. It is heat treated and ground to achieve high rigidity and accuracy.

● Ease of Mounting and Replacement

The highly accurate fabrication of the NB stroke bush results in uniform dimensions, facilitating parts replacement and housing fabrication.

● Light Weight and Space Saving

The use of an aluminum alloy for the retainer and the thin-wall outer cylinder makes the NB stroke bush light weight and compact.

● Lubrication

One lubrication hole is provided on each oil groove of the outer cylinder, making it easy to lubricate the SR stroke bush.

Figure E-1 Structure of SR Stroke Bush

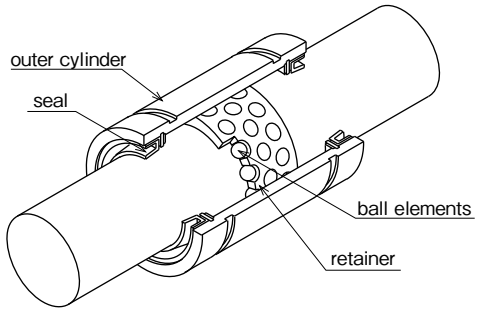

ACCURACY

The accuracies of the SR stroke bush are stated in the dimension tables. Since the outer cylinder deforms due to tension from the retaining ring, the dimension of the outer cylinder is an average value at points P, where calculated using the following equation:

$$W=4+L/8$$

W: the distance from the end of the outer cylinder to measurement point P
L: the length of the outer cylinder

Figure E-2 Outer Cylinder Measurement Points

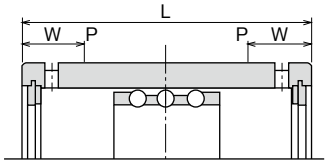

FIT

The fits generally used between the shaft and the housing are listed in Table E-1. The inner contact diameters of the SR stroke bush are listed in the dimension tables. The shaft diameter tolerance should be selected to achieve the desired amount of radial clearance (see Table E-2). Please pay attention that high-speed linear motion can cause the retainer to slip due to inertial force.

Table E-1

normal operating condition		vertical use or highly accurate case	
shaft	housing	shaft	housing
k5,m5	H6,H7	n5,p6	J6,J7

Table E-2 Radial Clearance Negative Limit

part number	limit (μm)
6	− 2
8~10	− 3
12~16	− 4
20~30	− 5
35~50	− 6
60~80	− 8
100	−10

RATED LOAD AND RATED LIFE

The relationship between the rated load and life of the stroke bush is expressed as follows:

$$L=\left(\frac{f_H \cdot f_T \cdot f_C}{f_W} \cdot \frac{C}{P}\right)^3$$

L: rated life (10^6 rotations) f_H: hardness coefficient
f_T: temperature coefficient f_C: contact coefficient
f_W: applied load coefficient
C: basic dynamic load rating (N)
P: applied load (N)
※Refer to page Eng-5 for the coefficients.

●For combined rotation and stroke motion

$$L_h=\frac{10^6 \cdot L}{60\sqrt{(dm \cdot n)^2+(10 \cdot S \cdot n_1)^2}/dm}$$

●For stroke motion

$$L_h=\frac{10^6 \cdot L}{600 \cdot S \cdot n_1/(\pi \cdot dm)}$$

L_h: life time (hr) S: stroke length (mm)
n: revolutions per min. (rpm)
n_1: number of cycles per minute (cpm)
dm: ball pitch diameter (mm) ≒ 1.15 dr

ALLOWABLE SPEED FOR COMBINED ROTATION AND STROKE MOTION

The allowable speed for combined rotation and stroke motion is obtained from the following equation:

$$DN \geqq dm \cdot n+10 \cdot S \cdot n_1$$

The value of DN is given as follows depending on the lubrication method.

for oil lubrication	DN=600,000
for grease lubrication	DN=300,000

note……$n \leqq 5{,}000$ $S \cdot n_1 \leqq 50{,}000$

www.bergab.ru Берг АБ bergab@ya.ru Тел. (495)-228-06-21, факс (495) 223-3071

www.bergab.ru Берг АБ bergab@ya.ru Тел. (495)-228-06-21, факс (495) 223-3071

SR TYPE

part number structure

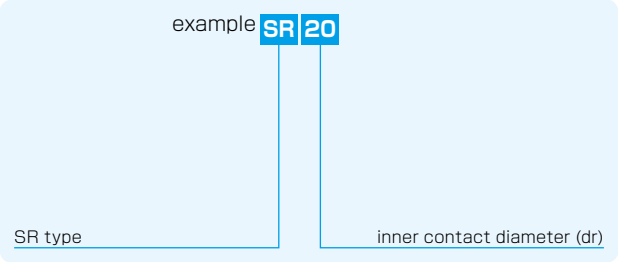

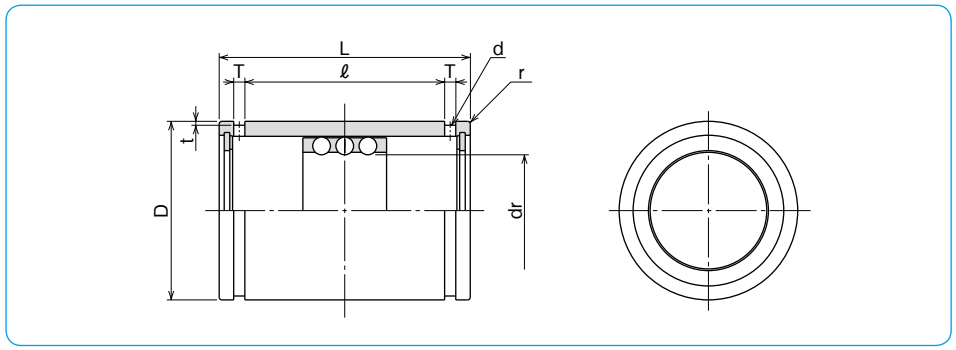

part number	maximum stroke	number of rows	dr		D		L		ℓ	T	t	d	r	basic load rating dynamic C	static Co	mass
	mm		mm	tolerance μm	mm	tolerance μm	mm	tolerance mm	mm	mm	mm	mm	mm	N	N	g
SR 6	20	3	6	+22 +13	12	0 −11	20	0 −0.2	11.3	1.1	0.5	1	0.5	216	147	8.9
SR 8	24	3	8		15		24		17.1	1.5	0.5	1.2	0.5	343	245	15.6
SR 10	30	3	10	+27	19	0 −13	30		22.7	1.5	0.5	1.2	0.5	637	461	28.8
SR 12	32	3	12		23		32		24.5	1.5	0.5	1.2	0.5	1,070	813	42
SR 16	40	3	16	+16	28		37		29.1	1.5	0.7	1.3	0.5	1,180	990	71
SR 20	50	3	20	+33 +20	32	0 −16	45		35.8	2	0.7	1.5	0.5	1,260	1,170	99
SR 25	50	3	25		37		45	0 −0.3	35.8	2	0.7	1.6	1	1,330	1,330	117
SR 30	82	3	30		45		65		53.5	2.5	1	2	1	2,990	3,140	205
SR 35	92	3	35	+41 +25	52	0 −19	70		58.5	2.5	1	2	1.5	3,140	3,530	329
SR 40	108	3	40		60		80		68.3	2.5	1	2	1.5	4,120	4,800	516
SR 50	138	3	50		72		100		86.4	3	1	2.5	1.5	5,540	6,910	827
SR 60	138	3	60	+49	85	0 −22	100		86.4	3	1	2.5	2	5,980	8,230	1,240
SR 80	132	3	80	+30	110		100	0 −0.4	86	3	1.5	2.5	2	7,840	12,200	2,050
SR100	132	3	100	+58/+36	130	0/−25	100		86	3	1.5	2.5	2	8,430	14,700	2,440

1N≒0.102kgf

SR-UU TYPE

part number structure

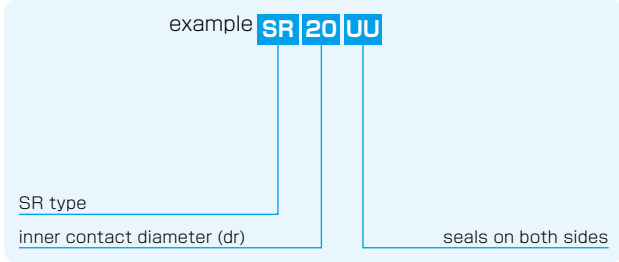

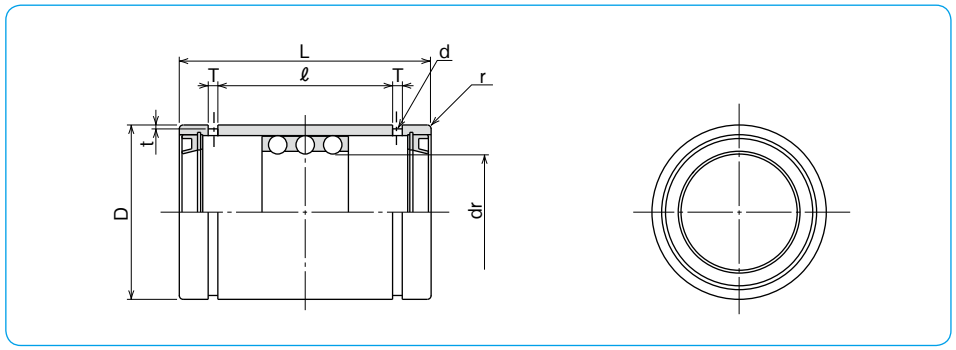

part number	maximum stroke	number of rows	dr		D		L		ℓ	T	t	d	r	basic load rating dynamic C	static Co	mass
	mm		mm	tolerance μm	mm	tolerance μm	mm	tolerance mm	mm	mm	mm	mm	mm	N	N	g
SR 8UU	14	3	8	+22	15	0/−11	24	0 −0.2	12.3	1.5	0.5	1.2	0.5	343	245	15.6
SR 10UU	16	3	10	+13	19	0 −13	30		15.5	1.5	0.5	1.2	0.5	637	461	28.8
SR 12UU	17	3	12	+27	23		32		17.1	1.5	0.5	1.2	0.5	1,070	813	42
SR 16UU	24	3	16	+16	28		37		21.1	1.5	0.7	1.3	0.5	1,180	990	71
SR 20UU	32	3	20	+33 +20	32	0 −16	45		26.8	2	0.7	1.5	0.5	1,260	1,170	99
SR 25UU	32	3	25		37		45	0 −0.3	26.8	2	0.7	1.6	1	1,330	1,330	117
SR 30UU	65	3	30		45		65		45.1	2.5	1	2	1	2,990	3,140	205
SR 35UU	75	3	35	+41 +25	52	0 −19	70		50.1	2.5	1	2	1.5	3,140	3,530	329
SR 40UU	91	3	40		60		80		59.9	2.5	1	2	1.5	4,120	4,800	516
SR 50UU	120	3	50		72		100		77.4	3	1	2.5	1.5	5,540	6,910	827
SR 60UU	120	3	60	+49	85	0	100		77.4	3	1	2.5	2	5,980	8,230	1,240
SR 80UU	114	3	80	+30	110	−22	100	0 −0.4	77	3	1.5	2.5	2	7,840	12,200	2,050
SR100UU	114	3	100	+58/+36	130	0/−25	100		77	3	1.5	2.5	2	8,430	14,700	2,440

1N≒0.102kgf

www.bergab.ru Берг АБ bergab@ya.ru Тел. (495)-228-06-21, факс (495) 223-3071

www.bergab.ru Берг АБ bergab@ya.ru Тел. (495)-228-06-21, факс (495) 223-3071

SR-B TYPE

part number structure

example **SR 20 B**

- SR type
- inner contact diameter (dr)
- double retainer

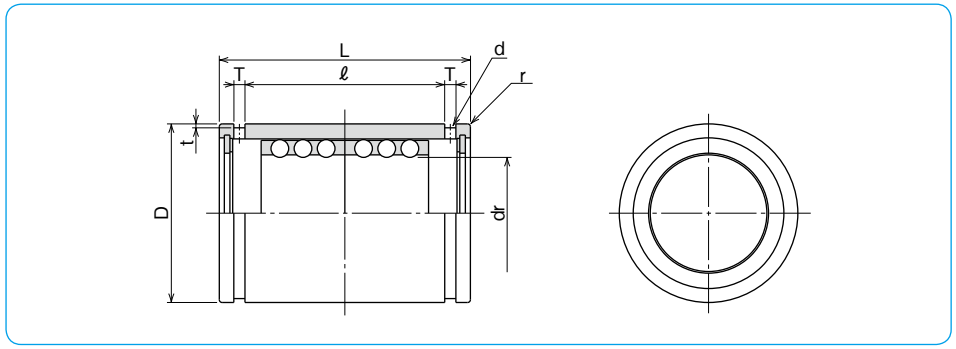

part number	maximum stroke	number of rows	dr		D		L		ℓ	T	t	d	r	basic load rating dynamic C	static Co	mass
	mm		mm	tolerance μm	mm	tolerance μm	mm	tolerance mm	mm	mm	mm	mm	mm	N	N	g
SR 8B	8	6	8	+22	15	0/−11	24	0 −0.2	17.1	1.5	0.5	1.2	0.5	549	490	16.8
SR 10B	8	6	10	+13	19	0 −13	30		22.7	1.5	0.5	1.2	0.5	1,030	931	31.2
SR 12B	8	6	12	+27	23		32		24.5	1.5	0.5	1.2	0.5	1,720	1,630	46
SR 16B	16	6	16	+16	28		37		29.1	1.5	0.7	1.3	0.5	1,910	1,980	75
SR 20B	20	6	20	+33 +20	32	0 −16	45		35.8	2	0.7	1.5	0.5	2,060	2,320	106
SR 25B	20	6	25		37		45	0 −0.3	35.8	2	0.7	1.6	1	2,170	2,670	125
SR 30B	44	6	30		45		65		53.5	2.5	1	2	1	4,800	6,270	220
SR 35B	54	6	35	+41 +25	52	0 −19	70		58.5	2.5	1	2	1.5	5,050	7,060	346
SR 40B	66	6	40		60		80		68.3	2.5	1	2	1.5	6,710	9,560	540
SR 50B	88	6	50		72		100		86.4	3	1	2.5	1.5	8,970	13,800	862
SR 60B	88	6	60	+49	85	0	100		86.4	3	1	2.5	2	9,700	16,500	1,290
SR 80B	76	6	80	+30	110	−22	100	0 −0.4	86	3	1.5	2.5	2	12,700	24,300	2,110
SR100B	76	6	100	+58/+36	130	0/−25	100		86	3	1.5	2.5	2	13,700	29,400	2,520

1N≒0.102kgf

SR-BUU TYPE

part number structure

example **SR 30 B UU**

- SR type
- inner contact diameter (dr)
- double retainer
- seals on both sides

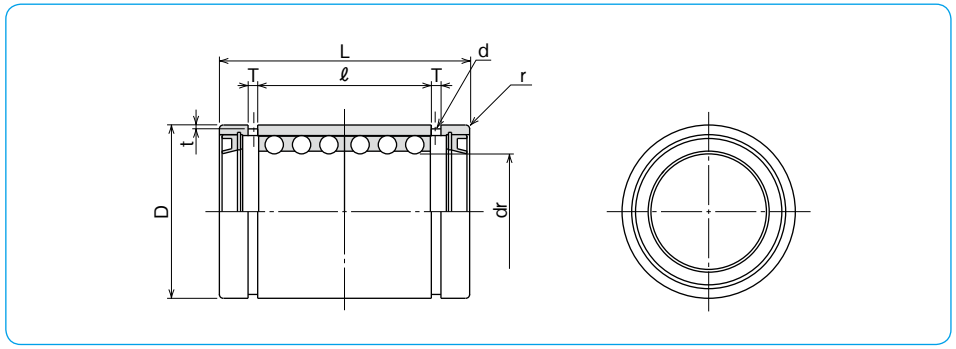

part number	maximum stroke	number of rows	dr		D		L		ℓ	T	t	d	r	basic load rating dynamic C	static Co	mass
	mm		mm	tolerance μm	mm	tolerance μm	mm	tolerance mm	mm	mm	mm	mm	mm	N	N	g
SR 30BUU	27	6	30	+33/+20	45	0/−16	65	0 −0.3	45.1	2.5	1	2	1	4,800	6,270	220
SR 35BUU	37	6	35	+41 +25	52	0 −19	70		50.1	2.5	1	2	1.5	5,050	7,060	346
SR 40BUU	49	6	40		60		80		59.9	2.5	1	2	1.5	6,710	9,560	540
SR 50BUU	70	6	50		72		100		77.4	3	1	2.5	1.5	8,970	13,800	862
SR 60BUU	70	6	60	+49	85	0	100		77.4	3	1	2.5	2	9,700	16,500	1,290
SR 80BUU	58	6	80	+30	110	−22	100	0 −0.4	77	3	1.5	2.5	2	12,700	24,300	2,110
SR100BUU	58	6	100	+58/+36	130	0/−25	100		77	3	1.5	2.5	2	13,700	29,400	2,520

1N≒0.102kgf

www.bergab.ru Берг АБ bergab@ya.ru Тел. (495)-228-06-21, факс (495) 223-3071

www.bergab.ru Берг АБ bergab@ya.ru Тел. (495)-228-06-21, факс (495) 223-3071

SLIDE ROTARY BUSH SRE SERIES

The NB Slide Rotary Bush SRE Series provides rotary and linear motion functions. Linear motion with unlimited stroke and rotary motion are merged into a single bush resulting in great space saving compared with a combination of any conventional bearings. There are three types; standard, flange, and unit type with sizes ranging from 6 to 40.

STRUCTURE AND ADVANTAGES

NB Slide Rotary Bush features a special retainer fitted into cylindrical steel outer cylinder and is designed to guide steel balls for smooth circulation in its retainer. The retainer is also designed to rotate freely towards radial direction and offers smooth linear and rotary motions.

●Smooth Operation

The inner surface of the outer cylinder allows smooth operation of linear and rotary motions while maintaining a uniform load distribution.

●High Load Capacity

The use of comparatively large diameter steel balls enhances the load capacity.

●Smooth Rotation

The positioning of the steel balls in a cylindrical formation inside the retainer enables a smooth rotational motion regardless of the installation direction.

●Complete Interchangeability

NB Slide Rotary series is completely interchangeable with SM type Slide Bush, SMK type Flanged Slide Bush and SMA(W) type, AK(W) type and SMP type.

Figure E-3 Structure of Slide Rotary Bush SRE type

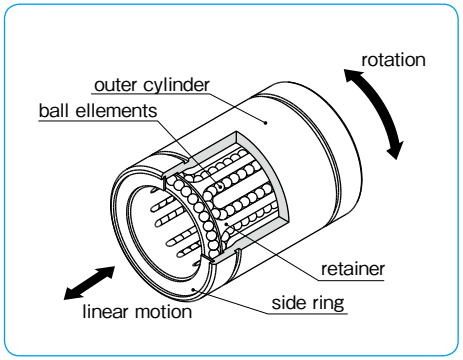

RATED LIFE AND LOAD RATING

The rated life and load rating are defined as follows.

●Rated Life

When a group of slide rotary bearings of the same type are used under the same conditions, the rated life is defined as the total number of rotations made without causing flaking by 90% of the bearings.

●Basic Dynamic Load Rating

The basic dynamic load rating is defined as the load with a constant magnitude and direction at which a rated life of 10^6 rotations can be achieved.

●Basic Static Load Rating

The basic static load rating is defined as the load with a constant direction that would result in a certain contact stress at the mid-point of the rolling element and tracking surface that are experiencing the maximum stress.

Equation (1) gives the relation between the applied load and the rated life of the slide rotary bush.

$$L=\left(\frac{f_H \cdot f_T \cdot f_C}{f_W} \cdot \frac{C}{P}\right)^3 \quad \cdots\cdots (1)$$

L: rated life (10^6 rotations) f_H: hardness coefficient
f_T: temperature coefficient f_C: contact coefficient
f_W: applied load coefficient C: basic dynamic load rating (N)
P: applied load (N)
※Refer to page Eng-5 for the coefficients.

Since the slide rotary bush is used in applications with combined linear and rotary motions, the life time is obtained using Equations (2) and (3) .

●When linear and rotary motions are combined

$$L_h=\frac{10^6 \cdot L}{60\sqrt{(dm \cdot n)^2+(10 \cdot S \cdot n_1)^2}/dm} \cdots (2)$$

●When only linear motion is involved

$$L_h=\frac{10^6 \cdot L}{600 \cdot S \cdot n_1/(\pi \cdot dm)} \quad \cdots\cdots (3)$$

L_h: life time (hr) S: stroke length (mm) n: revolutions per minute (rpm) n_1: number of cycles per minute (cpm)
dm: ball pitch diameter (mm)≒1.15dr (dr is the inner contact diameter of the SRE series)

Calculation Example

The life of SRE20 type NB slide rotary bush is calculated based on the following conditions.

●Conditions

Motion: Linear and rotational combined Load: P=30N Stroke: S=200mm
Revolutions per minute: n=15rpm Number of cycles per minute: n_1=10cpm
Shaft surface hardness: greater than 58 HRC
Operating temperature: room temperature Other: single shaft with single bush

●Calculation

Basic dynamic load rating: C=647 N
Based on the above conditions, the life is calculated using the following coefficient values.
Hardness coefficient f_H=1, Temperature coefficient f_T=1, Contact coefficient f_C=1
Applied load coefficient, f_W=1.5

Rated life

$$L=\left(\frac{f_H \cdot f_T \cdot f_C}{f_W} \cdot \frac{C}{P}\right)^3$$

$$=\left(\frac{1\times1\times1}{1.5} \cdot \frac{647}{30}\right)^3 = 2{,}972 \ (10^6 \text{ rotations})$$

Life (in hours)

$$L_h=\frac{10^6 \cdot L}{60\sqrt{(dm \cdot n)^2+(10 \cdot S \cdot n_1)^2}/dm}$$

$$=\frac{10^6\times2{,}975}{60\sqrt{(1.15\times20\times15)^2+(10\times200\times10)^2}/(1.15\times20)}$$

$$=56{,}900 \ (h)$$

www.bergab.ru Берг АБ bergab@ya.ru Тел. (495)-228-06-21, факс (495) 223-3071

www.bergab.ru Берг АБ bergab@ya.ru Тел. (495)-228-06-21, факс (495) 223-3071

APPLICATION EXAMPLES

Application Example 1 Vertical Shaft Robot Arm

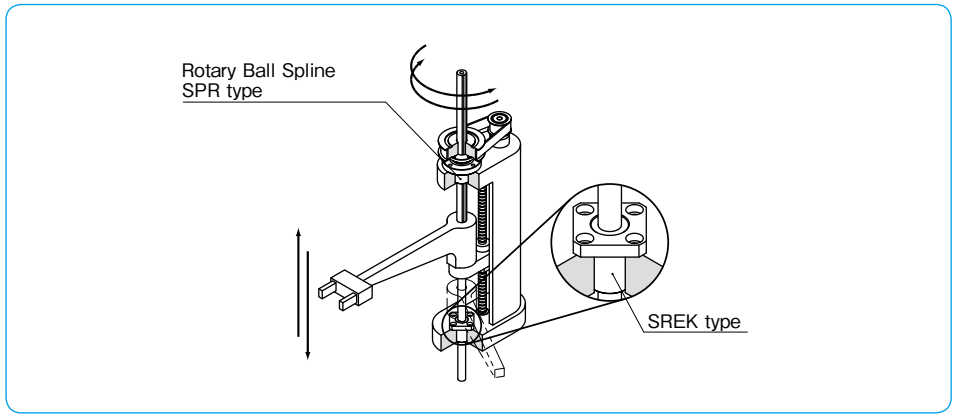

Application Example 2 Multiple Gearing Idler

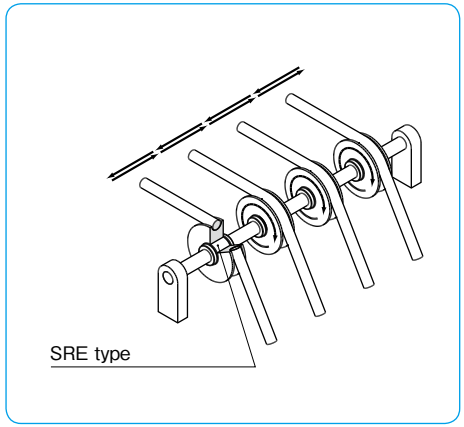

Application Example 3 Tool Changer

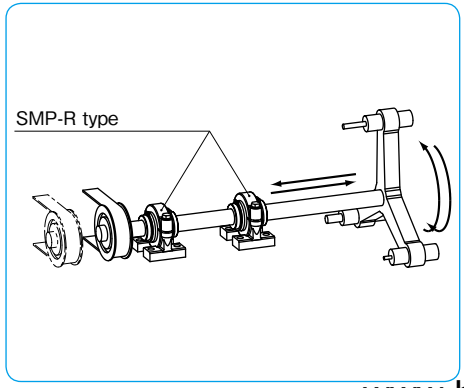

Application Example 4 Turntable

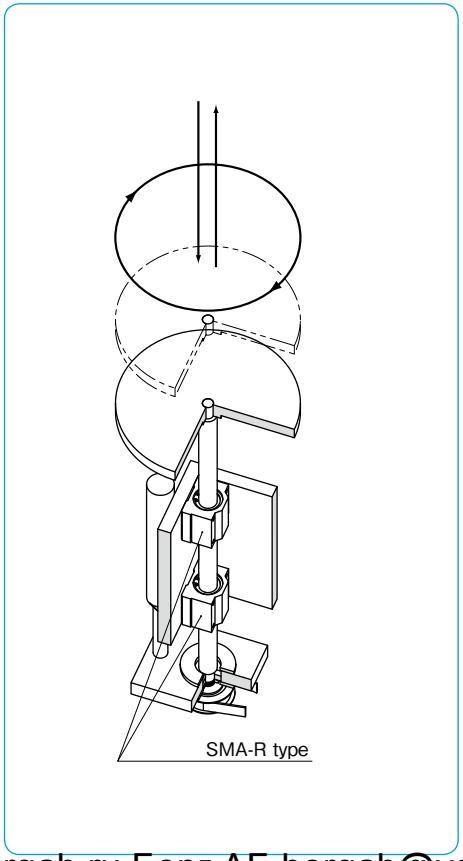

USE AND HANDLING PRECAUTIONS

●Shaft

Since the ball elements rotate on the shaft surface in the SRE type slide rotary bush, the accuracy and hardness of the shaft are important factors.

Outer Diameter: A tolerance of g6 is recommended for smooth operation.

Hardness: A hardness of greater than 58HRC is recommended for long life. If the hardness is less than 58 HRC, the life is calibrated using the hardness coefficient.

Surface Roughness: A roughness of less than 0.4Ra is recommended.

●Housing

An inner diameter tolerance of H7 is recommended for housing.

●Lubrication

Lubrication is needed (1) to prevent heat fusing by reducing friction between the rolling elements and the tracking surface, (2) to reduce wear of the structural elements, and (3) to prevent rusting.

Lubrication affects both the performance and life of the bush. A lubrication method and a lubrication agent appropriate to the operating conditions should be selected. For oil lubrication, turbine oil (ISO standard VG32-68) is recommended. For grease lubrication, lithium soap based grease No. 2 is recommended. The replenishment interval depends on the operating conditions.

●Dust Prevention

Dust and other contaminants affect the bush's lifetime and accuracy. Appropriate prevention methods are thus important.

●Operating Temperature Range

The operating temperature is ranging from −20℃ to 110℃. In case of operation at a temperature outside this range, please contact NB.

●Retainer Material

The standard material of SRE Retainer is copper alloy. When requiring other material, please contact NB.

FELT SEAL

A felt seal FLM strengthens lubrication characteristics and extends relubrication period of the slide rotary bush.

Figure E-4 Felt Seal

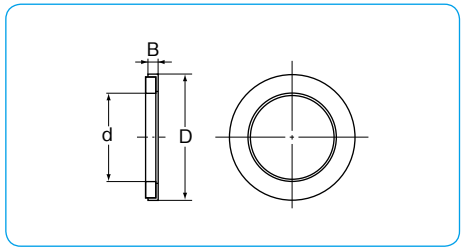

Table E-3 Felt Seal Dimensions

part number	major dimensions (mm)			applicable slide rotary bush
	d	D	B	
FLM 6	6	12	2	SRE 6
FLM 8	8	15	2	SRE 8
FLM 10	10	19	3	SRE 10
FLM 12	12	21	3	SRE 12
FLM 13	13	23	3	SRE 13
FLM 16	16	28	4	SRE 16
FLM 20	20	32	4	SRE 20
FLM 25	25	40	5	SRE 25
FLM 30	30	45	5	SRE 30
FLM 40	40	60	5	SRE 40

Installation

The felt seal does not work as a retaining ring. Figure E-5 shows how to install the felt seal.

Figure E-5 Example of Installation

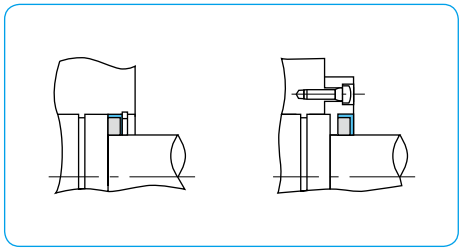

www.bergab.ru Берг АБ bergab@ya.ru Тел. (495)-228-06-21, факс (495) 223-3071

www.bergab.ru Берг АБ bergab@ya.ru Тел. (495)-228-06-21, факс (495) 223-3071

SRE TYPE

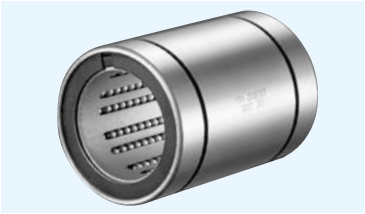

part number structure

example **SRE** **25**

SRE type

inner contact diameter (dr)

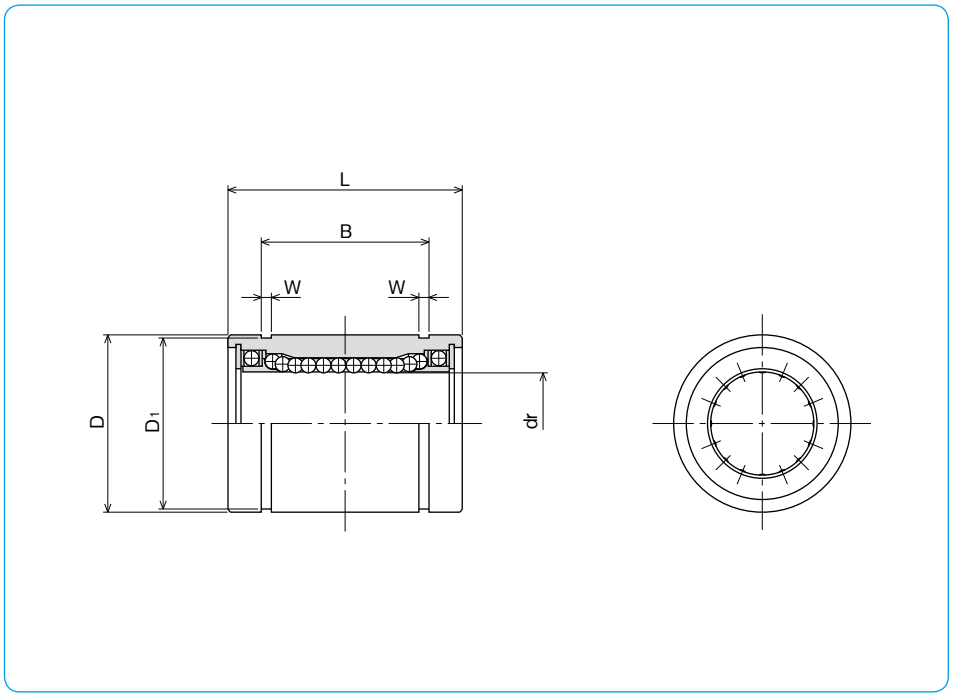

part number	major dimensions dr mm	dr tolerance μm	D mm	D tolerance μm	L mm	L tolerance mm	B mm	B tolerance mm
SRE 6	6	+4 −5	12	0 −11	19	0 −0.2	13.5	0 −0.2
SRE 8	8		15		24		17.5	
SRE10	10		19	0 −13	29		22	
SRE12	12	+3 −6	21		30		23	
SRE13	13		23		32		23	
SRE16	16		28		37		26.5	
SRE20	20	+3 −7	32	0 −16	42		30.5	
SRE25	25		40		59	0 −0.3	41	0 −0.3
SRE30	30		45		64		44.5	
SRE40	40	+3/−8	60	0/−19	80		60.5	

※If the inner contact diameter exceeds 40 mm, please contact NB.

W mm	D1 mm	basic load rating dynamic C N	basic load rating static Co N	allowable revolutions per minute rpm	mass g	part number
1.1	11.5	78	176	300	10	SRE 6
1.1	14.3	137	314	300	20	SRE 8
1.3	18	157	372	300	39	SRE10
1.3	20	274	588	300	42	SRE12
1.3	22	323	686	300	56	SRE13
1.6	27	451	882	250	97	SRE16
1.6	30.5	647	1,180	250	133	SRE20
1.85	38	882	1,860	250	293	SRE25
1.85	43	1,180	2,650	200	371	SRE30
2.1	57	1,960	4,020	200	778	SRE40

1N≒0.102kgf

www.bergab.ru Берг АБ bergab@ya.ru Тел. (495)-228-06-21, факс (495) 223-3071

www.bergab.ru Берг АБ bergab@ya.ru Тел. (495)-228-06-21, факс (495) 223-3071

SREK TYPE

— Square Flange type —

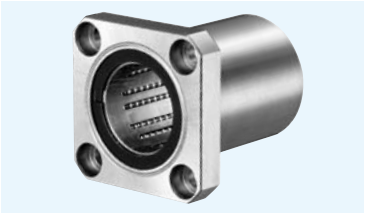

part number structure

example **SREK** **25**

SREK type

inner contact diameter (dr)

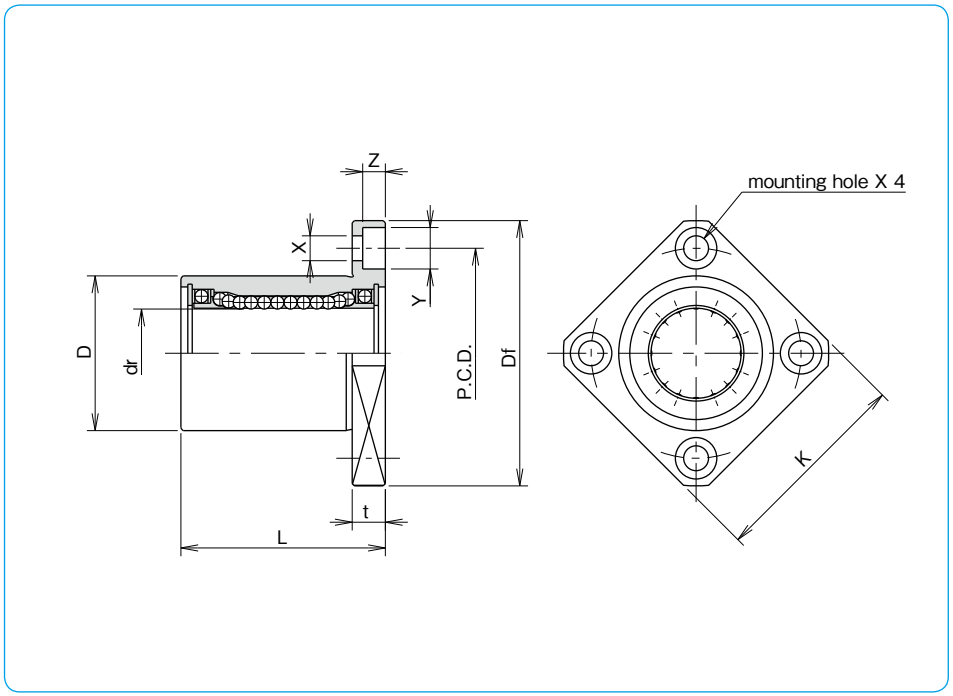

part number	major dimensions dr mm	dr tolerance μm	D mm	D tolerance μm	L ±0.3 mm	Df mm	K mm	flange t mm
SREK 6	6	+4 −5	12	0 −13	19	28	22	5
SREK 8	8		15		24	32	25	5
SREK10	10		19	0 −16	29	40	30	6
SREK12	12	+3 −6	21		30	42	32	6
SREK13	13		23		32	43	34	6
SREK16	16		28		37	48	37	6
SREK20	20	+3 −7	32	0 −19	42	54	42	8
SREK25	25		40		59	62	50	8
SREK30	30		45		64	74	58	10

P.C.D. mm	X×Y×Z mm	perpendicularity μm	basic load rating dynamic C N	basic load rating static Co N	allowable revolutions per minute rpm	mass g	part number
20	3.5×6×3.1	12	78	176	300	21	SREK 6
24	3.5×6×3.1		137	314	300	33	SREK 8
29	4.5×7.5×4.1		157	372	300	61	SREK10
32	4.5×7.5×4.1		274	588	300	67	SREK12
33	4.5×7.5×4.1		323	686	300	83	SREK13
38	4.5×7.5×4.1		451	882	250	126	SREK16
43	5.5×9×5.1	15	647	1,180	250	178	SREK20
51	5.5×9×5.1		882	1,860	250	355	SREK25
60	6.6×11×6.1		1,180	2,650	200	483	SREK30

1N≒0.102kgf

www.bergab.ru Берг АБ bergab@ya.ru Тел. (495)-228-06-21, факс (495) 223-3071

www.bergab.ru Берг АБ bergab@ya.ru Тел. (495)-228-06-21, факс (495) 223-3071

SMA-R TYPE
—Block type—

part number structure

example **SMA 25 R**

SMA-R type

inner contact diameter

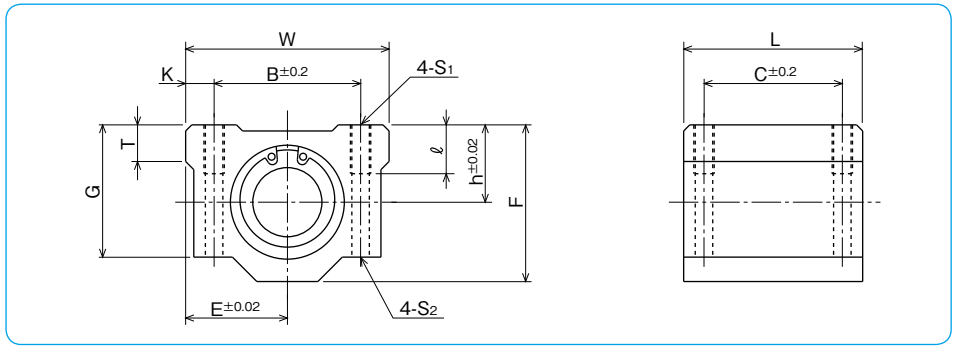

part number	inner contact diameter	tolerance	h	E	W	L	F	G	T	B	C	K	S_1	ℓ	S_2	basic load rating dynamic C	basic load rating static Co	allowable revolutions per minute	mass
	mm	μm	mm	mm	mm	mm	mm	mm	mm	mm	mm	mm		mm	mm	N	N	rpm	g
SMA 6R	6	+4 −5	9	15	30	25	18	15	6	20	15	5	M4	8	3.4	78	176	300	33
SMA 8R	8		11	17	34	30	22	18	6	24	18	5	M4	8	3.4	137	314	300	55
SMA10R	10		13	20	40	35	26	21	8	28	21	6	M5	12	4.3	157	372	300	93
SMA12R	12	+3 −6	15	21	42	36	28	24	8	30.5	26	5.75	M5	12	4.3	274	588	300	104
SMA13R	13		15	22	44	39	30	24.5	8	33	26	5.5	M5	12	4.3	323	686	300	128
SMA16R	16		19	25	50	44	38.5	32.5	9	36	34	7	M5	12	4.3	451	882	250	216
SMA20R	20	+3 −7	21	27	54	50	41	35	11	40	40	7	M6	12	5.2	647	1,180	250	286
SMA25R	25		26	38	76	67	51.5	42	12	54	50	11	M8	18	7	882	1,860	250	645
SMA30R	30		30	39	78	72	59.5	49	15	58	58	10	M8	18	7	1,180	2,650	200	824
SMA40R	40	+3/−8	40	51	102	90	78	62	20	80	60	11	M10	25	8.7	1,960	4,020	200	1,719

1N≒0.102kgf

SMA-RW TYPE
—Double-Wide Block type—

part number structure

example **SMA 25 R W**

SMA-R type

double type

inner contact diameter

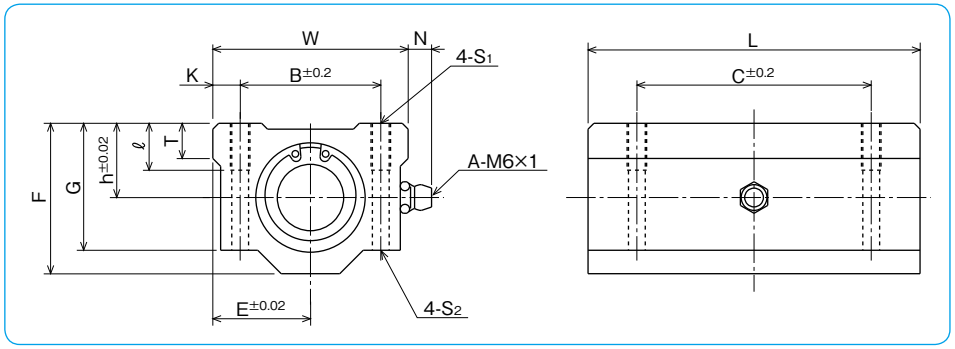

part number	inner contact diameter	tolerance	h	E	W	L	F	G	T	N	B	C	K	S_1	ℓ	S_2	basic load rating dynamic C	basic load rating static Co	allowable revolutions per minute	mass
	mm	μm	mm	mm	mm	mm	mm	mm	mm	mm	mm	mm	mm		mm	mm	N	N	rpm	g
SMA 6RW	6	+4 −5	9	15	30	48	18	15	6	7	20	36	5	M4	8	3.4	126	352	300	68
SMA 8RW	8		11	17	34	58	22	18	6	7	24	42	5	M4	8	3.4	222	628	300	113
SMA10RW	10		13	20	40	68	26	21	8	7	28	46	6	M5	12	4.3	254	744	300	188
SMA12RW	12	+3 −6	15	21	42	70	28	24	8	6.5	30.5	50	5.75	M5	12	4.3	444	1,180	300	210
SMA13RW	13		15	22	44	75	30	24.5	8	6.5	33	50	5.5	M5	12	4.3	523	1,370	300	254
SMA16RW	16		19	25	50	85	38.5	32.5	9	6	36	60	7	M5	12	4.3	731	1,760	250	431
SMA20RW	20	+3 −7	21	27	54	96	41	35	11	7	40	70	7	M6	12	5.2	1,050	2,360	250	568
SMA25RW	25		26	38	76	130	51.5	42	12	4	54	100	11	M8	18	7	1,430	3,720	250	1,282
SMA30RW	30		30	39	78	140	59.5	49	15	5	58	110	10	M8	18	7	1,910	5,300	200	1,638
SMA40RW	40	+3/−8	40	51	102	175	78	62	20	5	80	140	11	M10	25	8.7	3,180	8,040	200	3,419

1N≒0.102kgf

www.bergab.ru Берг АБ bergab@ya.ru Тел. (495)-228-06-21, факс (495) 223-3071

www.bergab.ru Берг АБ bergab@ya.ru Тел. (495)-228-06-21, факс (495) 223-3071

AK-R TYPE

−Compact Block type−

part number structure

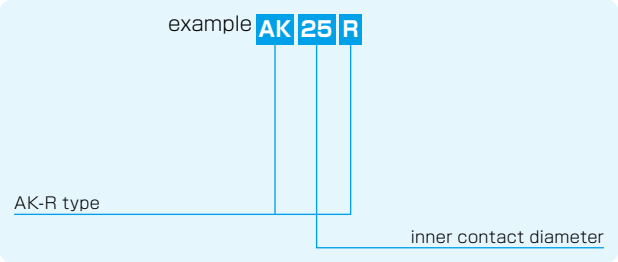

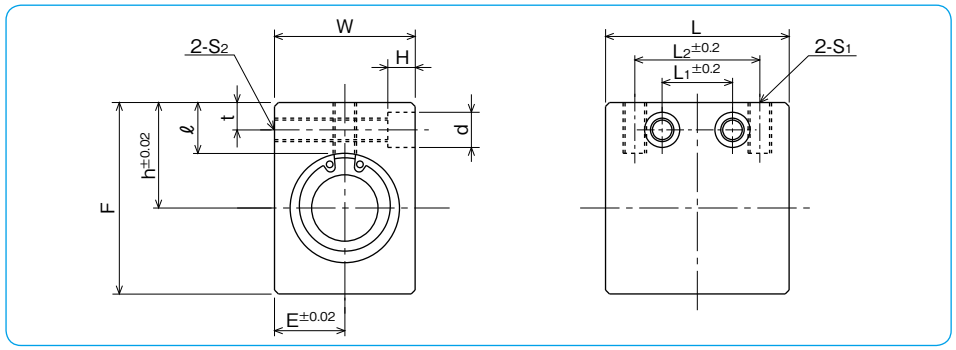

part number	inner contact diameter	tolerance	major dimensions: outer dimensions h	E	W	L	F	mounting dimensions L2	S1	ℓ	L1	t	S2	d	H	basic load rating dynamic C	static Co	allowable revolutions per minute	mass
	mm	μm	mm	mm	mm	mm	mm	mm		mm	mm	mm		mm	mm	N	N	rpm	g
AK 6R	6	+4 −5	14	8	16	27	22	18	M4	8	9	5	M4	6	5	78	176	300	27
AK 8R	8		16	10	20	32	26	20	M5	8.5	10	5	M4	6	5	137	314	300	48
AK10R	10		19	13	26	39	32	27	M6	9.5	15	6	M5	8	6	157	372	300	94
AK12R	12	+3 −6	20	14	28	40	34	27	M6	9.5	15	6	M5	8	6	274	588	300	105
AK13R	13		25	15	30	42	43	28	M6	13.5	16	7	M6	9	7	323	686	300	151
AK16R	16		27	18	36	47	49	32	M6	13	18	7	M6	9	7	451	882	250	238
AK20R	20	+3 −7	31	21	42	52	54	36	M8	15	18	8	M8	11	8	647	1,180	250	328
AK25R	25		37	26	52	69	65	42	M10	17	22	9	M10	14	10	882	1,860	250	669
AK30R	30		40	29	58	74	71	44	M10	17.5	22	9	M10	14	10	1,180	2,650	200	856

1N≒0.102kgf

AK-RW TYPE

−Double-Wide Compact Block type−

part number structure

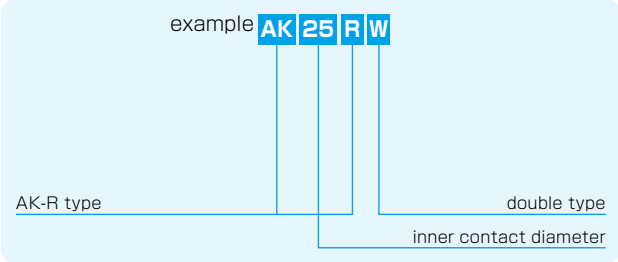

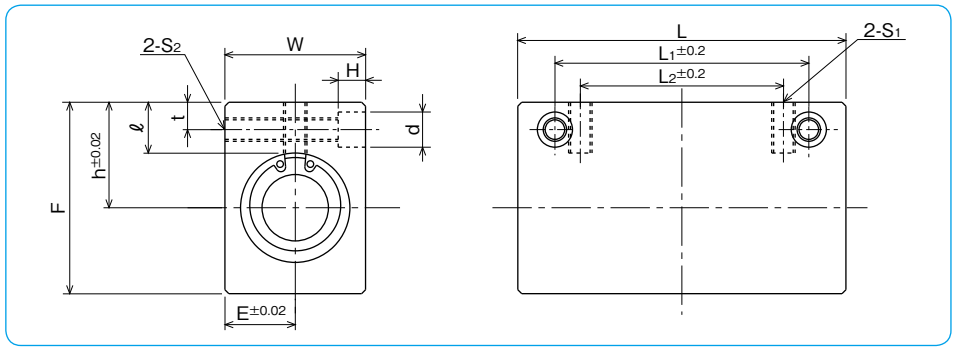

part number	inner contact diameter	tolerance	major dimensions: outer dimensions h	E	W	L	F	mounting dimensions L2	S1	ℓ	L1	t	S2	d	H	basic load rating dynamic C	static Co	allowable revolutions per minute	mass
	mm	μm	mm	mm	mm	mm	mm	mm		mm	mm	mm		mm	mm	N	N	rpm	g
AK 6RW	6	+4 −5	14	8	16	46	22	20	M4	8	30	5	M4	6	5	126	352	300	48
AK 8RW	8		16	10	20	56	26	30	M5	8.5	42	5	M4	6	5	222	628	300	89
AK10RW	10		19	13	26	68	32	36	M6	9.5	50	6	M5	8	6	254	744	300	175
AK12RW	12	+3 −6	20	14	28	70	34	36	M6	9.5	50	6	M5	8	6	444	1,180	300	196
AK13RW	13		25	15	30	74	43	42	M6	13.5	55	7	M6	9	7	523	1,370	300	281
AK16RW	16		27	18	36	84	49	52	M6	13	65	7	M6	9	7	731	1,760	250	450
AK20RW	20	+3 −7	31	21	42	94	54	58	M8	15	70	8	M8	11	8	1,050	2,360	250	626
AK25RW	25		37	26	52	128	65	80	M10	17	100	9	M10	14	10	1,430	3,720	250	1,299
AK30RW	30		40	29	58	138	71	90	M10	17.5	110	9	M10	14	10	1,910	5,300	200	1,662

1N≒0.102kgf

www.bergab.ru Берг АБ bergab@ya.ru Тел. (495)-228-06-21, факс (495) 223-3071

www.bergab.ru Берг АБ bergab@ya.ru Тел. (495)-228-06-21, факс (495) 223-3071

SMP-R TYPE

—Pillow Block type—

part number structure

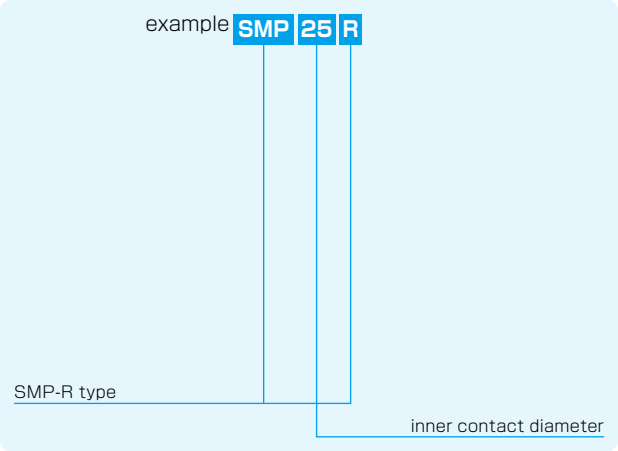

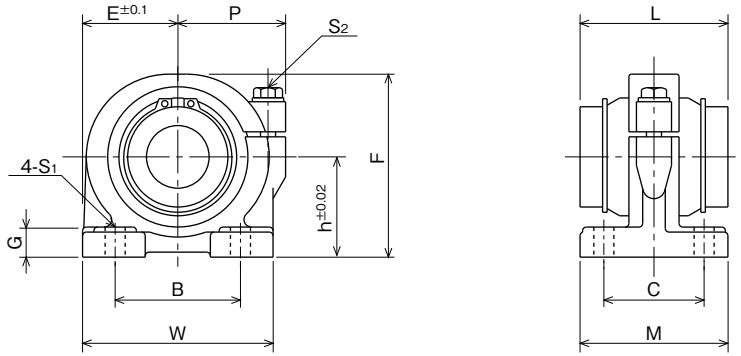

part number	inner contact diameter mm	tolerance μm	h mm	E mm	W mm	L mm	F mm	G mm	M mm
	major dimensions					outer dimensions			
SMP13R	13	+3 −6	25	25	50	32	46	8	36
SMP16R	16		29	27.5	55	37	53	10	40
SMP20R	20	+3 −7	34	32.5	65	42	62	12	48
SMP25R	25		40	38	76	59	73	12	59
SMP30R	30		45	42.5	85	64	84	15	69
SMP40R	40	+3/−8	60	62	124	80	112	18	86

P mm	mounting dimensions B mm	C mm	S1 mm	adjustment screw size S2	basic load rating dynamic C N	static Co N	allowable revolutions per minute rpm	mass g	part number
30	30	26	7 (M5)	M5	323	686	300	266	**SMP13R**
32	35	29	7 (M5)	M5	451	882	250	369	**SMP16R**
37	40	35	8 (M6)	M6	647	1,180	250	690	**SMP20R**
43	50	40	8 (M6)	M6	882	1,860	250	970	**SMP25R**
49	58	46	10 (M8)	M8	1,180	2,650	200	1,420	**SMP30R**
68	76	64	12 (M10)	M10	1,960	4,020	200	3,585	**SMP40R**

1N≒0.102kgf

www.bergab.ru Берг АБ bergab@ya.ru Тел. (495)-228-06-21, факс (495) 223-3071

www.bergab.ru Берг АБ bergab@ya.ru Тел. (495)-228-06-21, факс (495) 223-3071

SLIDE ROTARY BUSH RK TYPE

NB's RK type slide rotary bush is a highly accurate and high load capacity bearing providing smooth continuous linear and rotational motions. Its structure imposes no constraints on linear and rotational motions. It is much more compact than a standard slide bush with separate rotational bearing.

STRUCTURE AND ADVANTAGES

The RK type slide rotary bush uses a retainer similar to that used in the SR type stroke bush. This retainer gives a smooth motion in a high rotational application.
SM type slide bush is incorporated, providing the stable and smooth linear motion.
Relatively large ball elements are used for high load capacity.

1. A smooth unlimited linear and rotational motion is obtained.
2. There is no need to machine separate housing.
3. High accuracy is ensured for extended period of usage.
4. Its high compatibility eliminates replacement problems.
5. High rigidity enables it to withstand an unbalanced load and large load.

※For best performance, please select tolerance of h5 for the shaft.

Figure E-6 Structure of RK Slide Rotary Bush

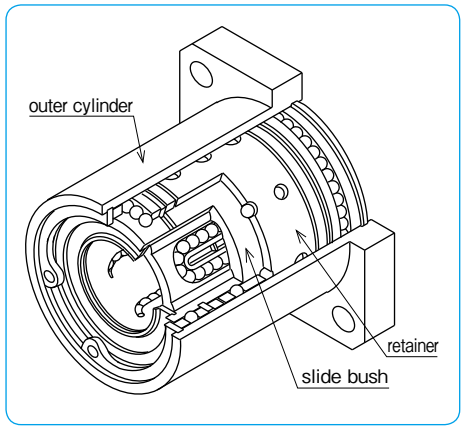

Calculation of Life:

$$L=\left(\frac{f_H \cdot f_T \cdot f_C}{f_W} \cdot \frac{C}{P}\right)^3 \times 50$$

L: rated life (km) f_H: hardness coefficient
f_T: temperature coefficient f_C: contact coefficient
f_W: applied load coefficient
C: basic dynamic load rating (N) P: applied load (N)
※Refer to page Eng-5 for the coefficients.

RK TYPE

part number structure

example RK 25 G UU-OH

- RK type
- inner contact diameter (dr)
- resin retainer
- seals on both sides
- oil hole
  blank: without oil hole
  OH: with oil hole *

*Oil hole is for rotary-portion lubrication.

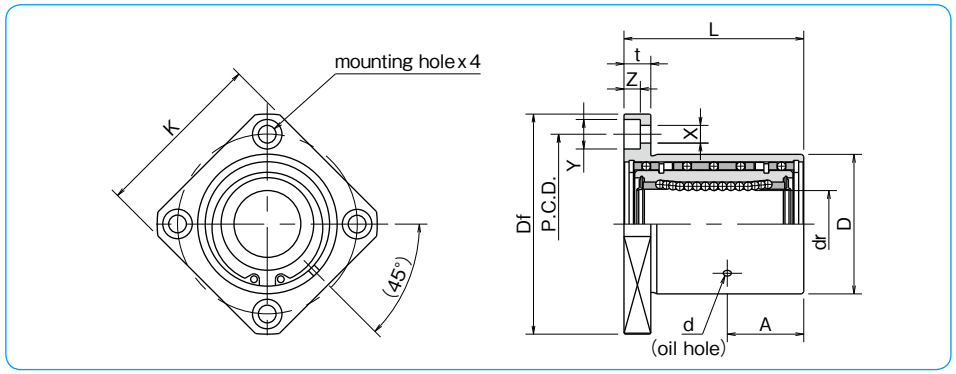

part number	major dimensions														basic load rating		allowable revolutions	mass
	dr		D		L		A	d	flange						dynamic	static	per minute	
		tolerance		tolerance		tolerance			Df	K	t	P.C.D.	X×Y×Z		C	Co		
	mm	μm	mm	μm	mm	mm	mm	mm	mm	mm	mm	mm	mm		N	N	rpm	g
RK12GUU	12	0	32	0	36		15	2	54	42	8	43	5.5×9×5.1		510	784	500	180
RK16GUU	16	−9	40	−25	45		19.5	2	62	50	8	51	5.5×9×5.1		774	1,180	500	280
RK20GUU	20	0	45		50	±0.3	21.5	3	74	58	10	60	6.6×11×6.1		882	1,370	400	420
RK25GUU	25	−10	52	0	67		28.5	3	82	64	10	67	6.6×11×6.1		980	1,570	400	680
RK30GUU	30		60	−30	74		31	3	96	75	13	78	9×14×8.1		1,570	2,740	400	990

1N≒0.102kgf

www.bergab.ru Берг АБ bergab@ya.ru Тел. (495)-228-06-21, факс (495) 223-3071

www.bergab.ru Берг АБ bergab@ya.ru Тел. (495)-228-06-21, факс (495) 223-3071

SR TYPE

part number structure

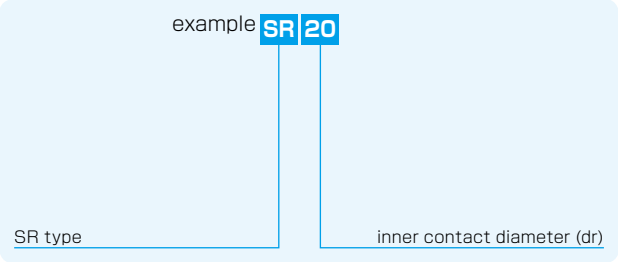

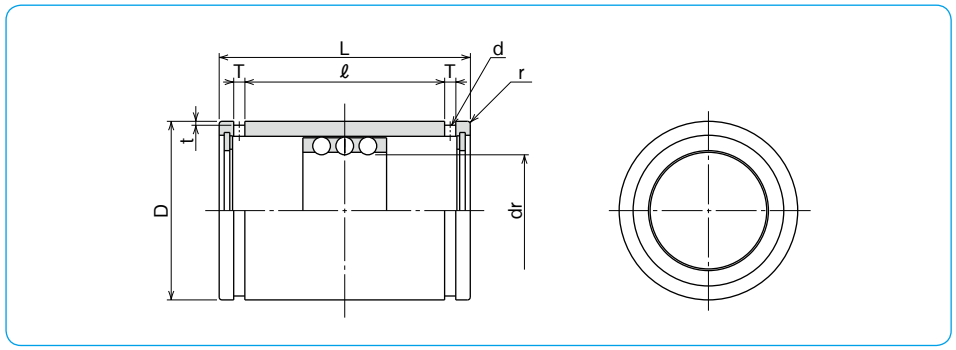

part number	maximum stroke	number of rows	dr		D		L		ℓ	T	t	d	r	basic load rating dynamic C	static Co	mass
	mm		mm	tolerance μm	mm	tolerance μm	mm	tolerance mm	mm	mm	mm	mm	mm	N	N	g
SR 6	20	3	6	+22 +13	12	0 −11	20	0 −0.2	11.3	1.1	0.5	1	0.5	216	147	8.9
SR 8	24	3	8		15		24		17.1	1.5	0.5	1.2	0.5	343	245	15.6
SR 10	30	3	10	+27	19	0 −13	30		22.7	1.5	0.5	1.2	0.5	637	461	28.8
SR 12	32	3	12		23		32		24.5	1.5	0.5	1.2	0.5	1,070	813	42
SR 16	40	3	16	+16	28		37		29.1	1.5	0.7	1.3	0.5	1,180	990	71
SR 20	50	3	20	+33 +20	32	0 −16	45		35.8	2	0.7	1.5	0.5	1,260	1,170	99
SR 25	50	3	25		37		45	0 −0.3	35.8	2	0.7	1.6	1	1,330	1,330	117
SR 30	82	3	30		45		65		53.5	2.5	1	2	1	2,990	3,140	205
SR 35	92	3	35	+41 +25	52	0 −19	70		58.5	2.5	1	2	1.5	3,140	3,530	329
SR 40	108	3	40		60		80		68.3	2.5	1	2	1.5	4,120	4,800	516
SR 50	138	3	50		72		100		86.4	3	1	2.5	1.5	5,540	6,910	827
SR 60	138	3	60	+49	85	0 −22	100		86.4	3	1	2.5	2	5,980	8,230	1,240
SR 80	132	3	80	+30	110		100	0 −0.4	86	3	1.5	2.5	2	7,840	12,200	2,050
SR100	132	3	100	+58/+36	130	0/−25	100		86	3	1.5	2.5	2	8,430	14,700	2,440

1N≒0.102kgf

SR-UU TYPE

part number structure

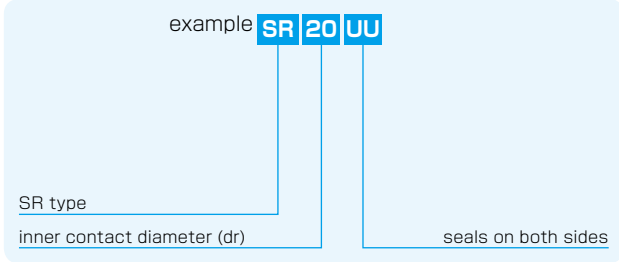

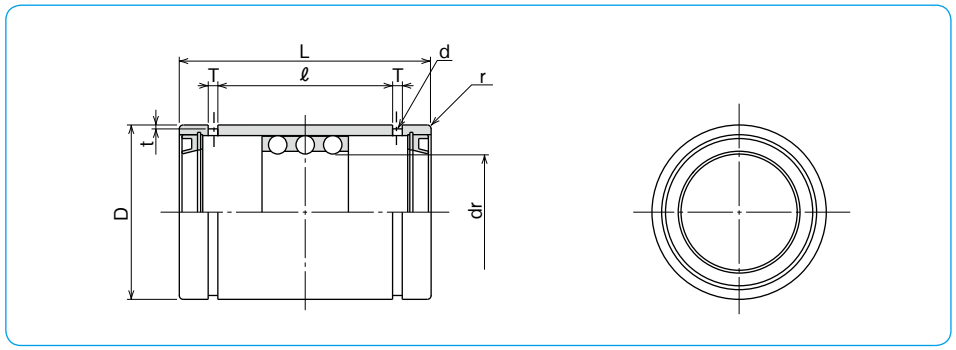

part number	maximum stroke	number of rows	dr		D		L		ℓ	T	t	d	r	basic load rating dynamic C	static Co	mass
	mm		mm	tolerance μm	mm	tolerance μm	mm	tolerance mm	mm	mm	mm	mm	mm	N	N	g
SR 8UU	14	3	8	+22	15	0/−11	24	0 −0.2	12.3	1.5	0.5	1.2	0.5	343	245	15.6
SR 10UU	16	3	10	+13	19	0 −13	30		15.5	1.5	0.5	1.2	0.5	637	461	28.8
SR 12UU	17	3	12	+27	23		32		17.1	1.5	0.5	1.2	0.5	1,070	813	42
SR 16UU	24	3	16	+16	28		37		21.1	1.5	0.7	1.3	0.5	1,180	990	71
SR 20UU	32	3	20	+33 +20	32	0 −16	45		26.8	2	0.7	1.5	0.5	1,260	1,170	99
SR 25UU	32	3	25		37		45	0 −0.3	26.8	2	0.7	1.6	1	1,330	1,330	117
SR 30UU	65	3	30		45		65		45.1	2.5	1	2	1	2,990	3,140	205
SR 35UU	75	3	35	+41 +25	52	0 −19	70		50.1	2.5	1	2	1.5	3,140	3,530	329
SR 40UU	91	3	40		60		80		59.9	2.5	1	2	1.5	4,120	4,800	516
SR 50UU	120	3	50		72		100		77.4	3	1	2.5	1.5	5,540	6,910	827
SR 60UU	120	3	60	+49	85	0	100		77.4	3	1	2.5	2	5,980	8,230	1,240
SR 80UU	114	3	80	+30	110	−22	100	0 −0.4	77	3	1.5	2.5	2	7,840	12,200	2,050
SR100UU	114	3	100	+58/+36	130	0/−25	100		77	3	1.5	2.5	2	8,430	14,700	2,440

1N≒0.102kgf

www.bergab.ru Берг АБ bergab@ya.ru Тел. (495)-228-06-21, факс (495) 223-3071

www.bergab.ru Берг АБ bergab@ya.ru Тел. (495)-228-06-21, факс (495) 223-3071

SR-B TYPE

part number structure

example **SR 20 B**

- SR type
- inner contact diameter (dr)
- double retainer

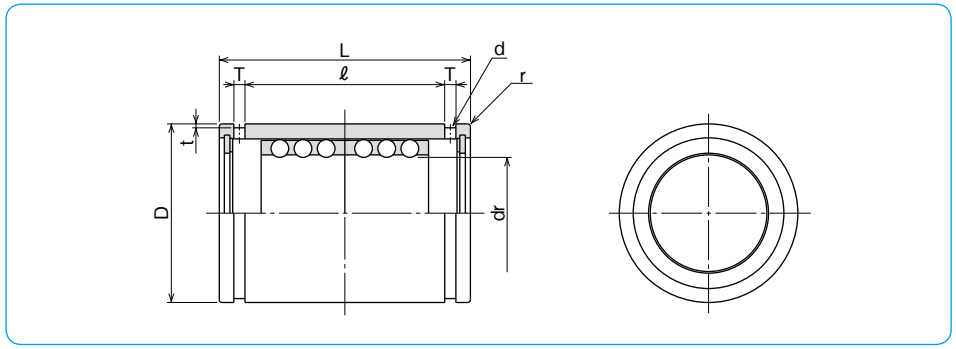

part number	maximum stroke	number of rows	dr		D		L		ℓ	T	t	d	r	basic load rating dynamic C	static Co	mass
	mm		mm	tolerance μm	mm	tolerance μm	mm	tolerance mm	mm	mm	mm	mm	mm	N	N	g
SR 8B	8	6	8	+22	15	0/−11	24	0 −0.2	17.1	1.5	0.5	1.2	0.5	549	490	16.8
SR 10B	8	6	10	+13	19	0 −13	30		22.7	1.5	0.5	1.2	0.5	1,030	931	31.2
SR 12B	8	6	12	+27	23		32		24.5	1.5	0.5	1.2	0.5	1,720	1,630	46
SR 16B	16	6	16	+16	28		37		29.1	1.5	0.7	1.3	0.5	1,910	1,980	75
SR 20B	20	6	20	+33 +20	32	0 −16	45		35.8	2	0.7	1.5	0.5	2,060	2,320	106
SR 25B	20	6	25		37		45	0 −0.3	35.8	2	0.7	1.6	1	2,170	2,670	125
SR 30B	44	6	30		45		65		53.5	2.5	1	2	1	4,800	6,270	220
SR 35B	54	6	35	+41 +25	52	0 −19	70		58.5	2.5	1	2	1.5	5,050	7,060	346
SR 40B	66	6	40		60		80		68.3	2.5	1	2	1.5	6,710	9,560	540
SR 50B	88	6	50		72		100		86.4	3	1	2.5	1.5	8,970	13,800	862
SR 60B	88	6	60	+49	85	0	100		86.4	3	1	2.5	2	9,700	16,500	1,290
SR 80B	76	6	80	+30	110	−22	100	0 −0.4	86	3	1.5	2.5	2	12,700	24,300	2,110
SR100B	76	6	100	+58/+36	130	0/−25	100		86	3	1.5	2.5	2	13,700	29,400	2,520

1N≒0.102kgf

SR-BUU TYPE

part number structure

example **SR 30 B UU**

- SR type
- inner contact diameter (dr)
- double retainer
- seals on both sides

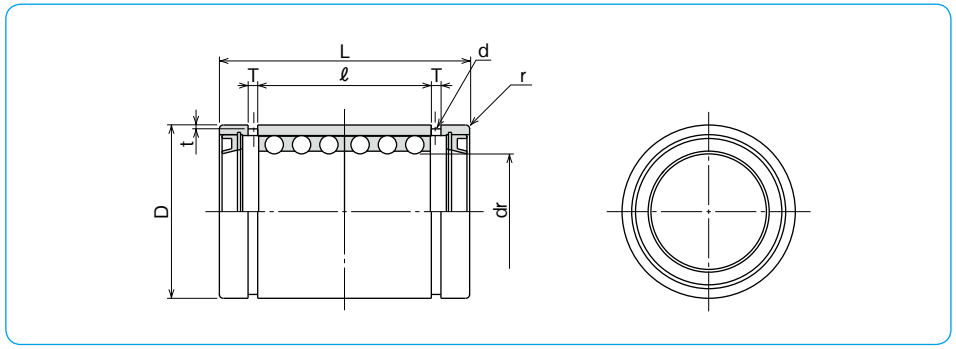

part number	maximum stroke	number of rows	dr		D		L		ℓ	T	t	d	r	basic load rating dynamic C	static Co	mass
	mm		mm	tolerance μm	mm	tolerance μm	mm	tolerance mm	mm	mm	mm	mm	mm	N	N	g
SR 30BUU	27	6	30	+33/+20	45	0/−16	65	0 −0.3	45.1	2.5	1	2	1	4,800	6,270	220
SR 35BUU	37	6	35	+41 +25	52	0 −19	70		50.1	2.5	1	2	1.5	5,050	7,060	346
SR 40BUU	49	6	40		60		80		59.9	2.5	1	2	1.5	6,710	9,560	540
SR 50BUU	70	6	50		72		100		77.4	3	1	2.5	1.5	8,970	13,800	862
SR 60BUU	70	6	60	+49	85	0	100		77.4	3	1	2.5	2	9,700	16,500	1,290
SR 80BUU	58	6	80	+30	110	−22	100	0 −0.4	77	3	1.5	2.5	2	12,700	24,300	2,110
SR100BUU	58	6	100	+58/+36	130	0/−25	100		77	3	1.5	2.5	2	13,700	29,400	2,520

1N≒0.102kgf

www.bergab.ru Берг АБ bergab@ya.ru Тел. (495)-228-06-21, факс (495) 223-3071

www.bergab.ru Берг АБ bergab@ya.ru Тел. (495)-228-06-21, факс (495) 223-3071

SRE TYPE

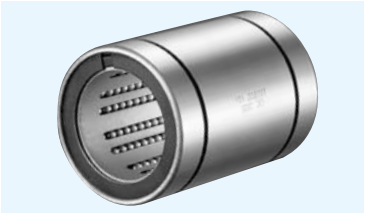

part number structure

example **SRE** **25**

SRE type

inner contact diameter (dr)

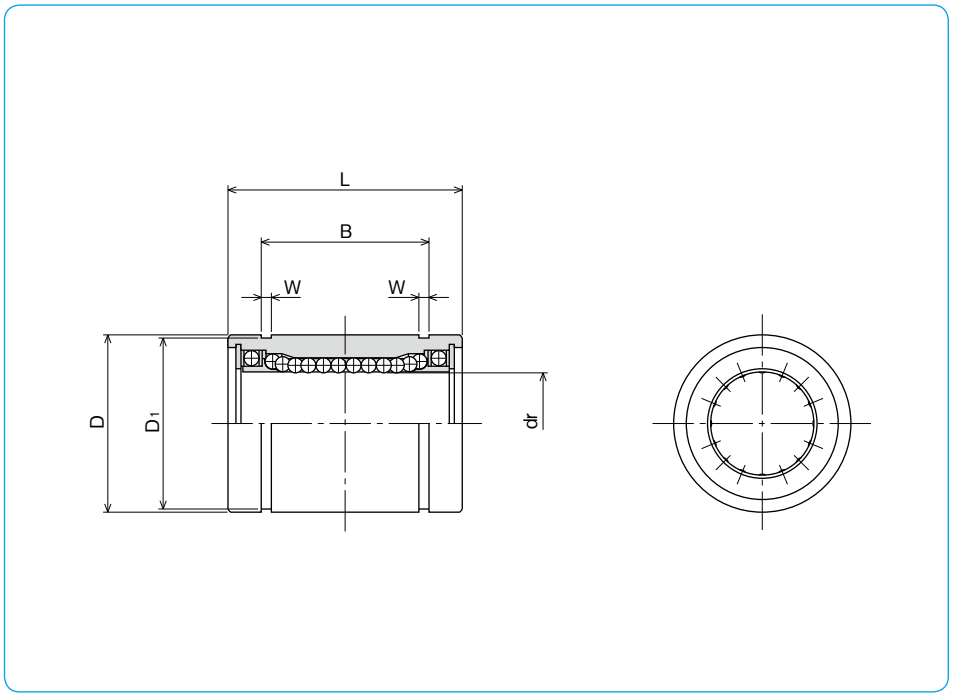

part number	major dimensions dr mm	dr tolerance μm	D mm	D tolerance μm	L mm	L tolerance mm	B mm	B tolerance mm
SRE 6	6	+4 −5	12	0 −11	19	0 −0.2	13.5	0 −0.2
SRE 8	8		15		24		17.5	
SRE10	10		19	0 −13	29		22	
SRE12	12	+3 −6	21		30		23	
SRE13	13		23		32		23	
SRE16	16		28		37		26.5	
SRE20	20	+3 −7	32	0 −16	42		30.5	
SRE25	25		40		59	0 −0.3	41	0 −0.3
SRE30	30		45		64		44.5	
SRE40	40	+3/−8	60	0/−19	80		60.5	

※If the inner contact diameter exceeds 40 mm, please contact NB.

W mm	D1 mm	basic load rating dynamic C N	basic load rating static Co N	allowable revolutions per minute rpm	mass g	part number
1.1	11.5	78	176	300	10	SRE 6
1.1	14.3	137	314	300	20	SRE 8
1.3	18	157	372	300	39	SRE10
1.3	20	274	588	300	42	SRE12
1.3	22	323	686	300	56	SRE13
1.6	27	451	882	250	97	SRE16
1.6	30.5	647	1,180	250	133	SRE20
1.85	38	882	1,860	250	293	SRE25
1.85	43	1,180	2,650	200	371	SRE30
2.1	57	1,960	4,020	200	778	SRE40

1N≒0.102kgf

www.bergab.ru Берг АБ bergab@ya.ru Тел. (495)-228-06-21, факс (495) 223-3071

www.bergab.ru Берг АБ bergab@ya.ru Тел. (495)-228-06-21, факс (495) 223-3071

SREK TYPE

— Square Flange type —

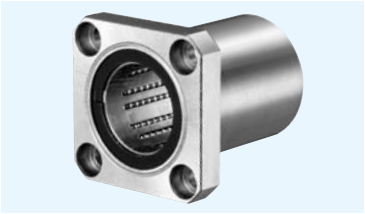

part number structure

example **SREK** **25**

SREK type

inner contact diameter (dr)

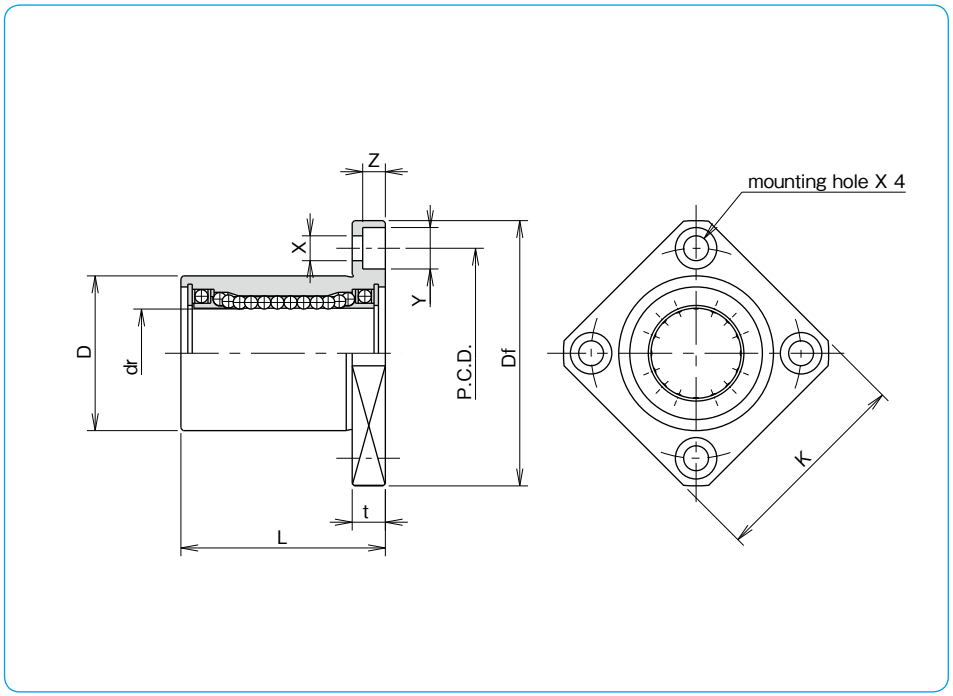

part number	major dimensions dr mm	dr tolerance μm	D mm	D tolerance μm	L ±0.3 mm	Df mm	K mm	flange t mm
SREK 6	6	+4 −5	12	0 −13	19	28	22	5
SREK 8	8		15		24	32	25	5
SREK10	10		19	0 −16	29	40	30	6
SREK12	12	+3 −6	21		30	42	32	6
SREK13	13		23		32	43	34	6
SREK16	16		28		37	48	37	6
SREK20	20	+3 −7	32	0 −19	42	54	42	8
SREK25	25		40		59	62	50	8
SREK30	30		45		64	74	58	10

P.C.D. mm	X×Y×Z mm	perpendicularity μm	basic load rating dynamic C N	basic load rating static Co N	allowable revolutions per minute rpm	mass g	part number
20	3.5×6×3.1	12	78	176	300	21	SREK 6
24	3.5×6×3.1		137	314	300	33	SREK 8
29	4.5×7.5×4.1		157	372	300	61	SREK10
32	4.5×7.5×4.1		274	588	300	67	SREK12
33	4.5×7.5×4.1		323	686	300	83	SREK13
38	4.5×7.5×4.1		451	882	250	126	SREK16
43	5.5×9×5.1	15	647	1,180	250	178	SREK20
51	5.5×9×5.1		882	1,860	250	355	SREK25
60	6.6×11×6.1		1,180	2,650	200	483	SREK30

1N≒0.102kgf

www.bergab.ru Берг АБ bergab@ya.ru Тел. (495)-228-06-21, факс (495) 223-3071

www.bergab.ru Берг АБ bergab@ya.ru Тел. (495)-228-06-21, факс (495) 223-3071

SMA-R TYPE
—Block type—

part number structure

example **SMA 25 R**

SMA-R type

inner contact diameter

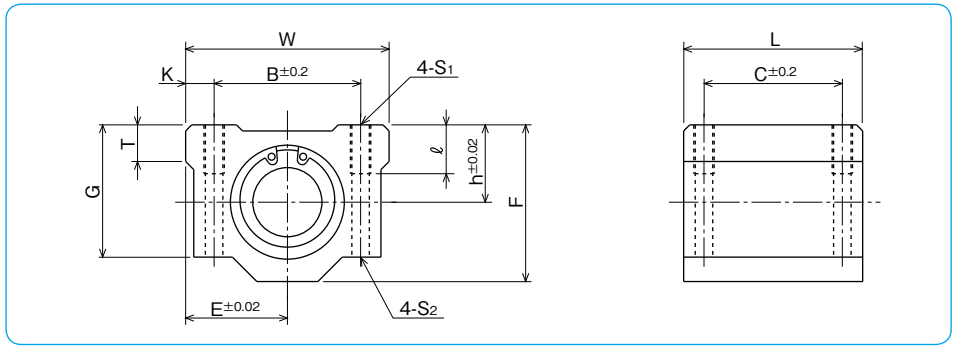

part number	inner contact diameter	tolerance	h	E	W	L	F	G	T	B	C	K	S_1	ℓ	S_2	basic load rating dynamic C	basic load rating static Co	allowable revolutions per minute	mass
	mm	μm	mm	mm	mm	mm	mm	mm	mm	mm	mm	mm		mm	mm	N	N	rpm	g
SMA 6R	6	+4 −5	9	15	30	25	18	15	6	20	15	5	M4	8	3.4	78	176	300	33
SMA 8R	8		11	17	34	30	22	18	6	24	18	5	M4	8	3.4	137	314	300	55
SMA10R	10		13	20	40	35	26	21	8	28	21	6	M5	12	4.3	157	372	300	93
SMA12R	12	+3 −6	15	21	42	36	28	24	8	30.5	26	5.75	M5	12	4.3	274	588	300	104
SMA13R	13		15	22	44	39	30	24.5	8	33	26	5.5	M5	12	4.3	323	686	300	128
SMA16R	16		19	25	50	44	38.5	32.5	9	36	34	7	M5	12	4.3	451	882	250	216
SMA20R	20	+3 −7	21	27	54	50	41	35	11	40	40	7	M6	12	5.2	647	1,180	250	286
SMA25R	25		26	38	76	67	51.5	42	12	54	50	11	M8	18	7	882	1,860	250	645
SMA30R	30		30	39	78	72	59.5	49	15	58	58	10	M8	18	7	1,180	2,650	200	824
SMA40R	40	+3/−8	40	51	102	90	78	62	20	80	60	11	M10	25	8.7	1,960	4,020	200	1,719

1N≒0.102kgf

SMA-RW TYPE
—Double-Wide Block type—

part number structure

example **SMA 25 R W**

SMA-R type

double type

inner contact diameter

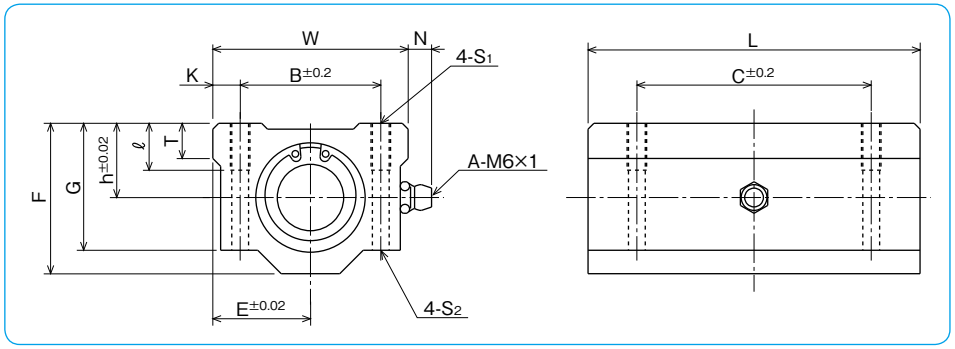

part number	inner contact diameter	tolerance	h	E	W	L	F	G	T	N	B	C	K	S_1	ℓ	S_2	basic load rating dynamic C	basic load rating static Co	allowable revolutions per minute	mass
	mm	μm	mm	mm	mm	mm	mm	mm	mm	mm	mm	mm	mm		mm	mm	N	N	rpm	g
SMA 6RW	6	+4 −5	9	15	30	48	18	15	6	7	20	36	5	M4	8	3.4	126	352	300	68
SMA 8RW	8		11	17	34	58	22	18	6	7	24	42	5	M4	8	3.4	222	628	300	113
SMA10RW	10		13	20	40	68	26	21	8	7	28	46	6	M5	12	4.3	254	744	300	188
SMA12RW	12	+3 −6	15	21	42	70	28	24	8	6.5	30.5	50	5.75	M5	12	4.3	444	1,180	300	210
SMA13RW	13		15	22	44	75	30	24.5	8	6.5	33	50	5.5	M5	12	4.3	523	1,370	300	254
SMA16RW	16		19	25	50	85	38.5	32.5	9	6	36	60	7	M5	12	4.3	731	1,760	250	431
SMA20RW	20	+3 −7	21	27	54	96	41	35	11	7	40	70	7	M6	12	5.2	1,050	2,360	250	568
SMA25RW	25		26	38	76	130	51.5	42	12	4	54	100	11	M8	18	7	1,430	3,720	250	1,282
SMA30RW	30		30	39	78	140	59.5	49	15	5	58	110	10	M8	18	7	1,910	5,300	200	1,638
SMA40RW	40	+3/−8	40	51	102	175	78	62	20	5	80	140	11	M10	25	8.7	3,180	8,040	200	3,419

1N≒0.102kgf

www.bergab.ru Берг АБ bergab@ya.ru Тел. (495)-228-06-21, факс (495) 223-3071

www.bergab.ru Берг АБ bergab@ya.ru Тел. (495)-228-06-21, факс (495) 223-3071

AK-R TYPE

−Compact Block type−

part number structure

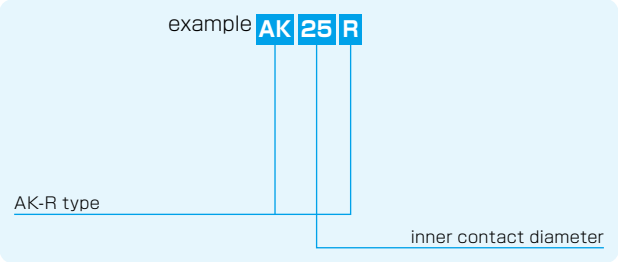

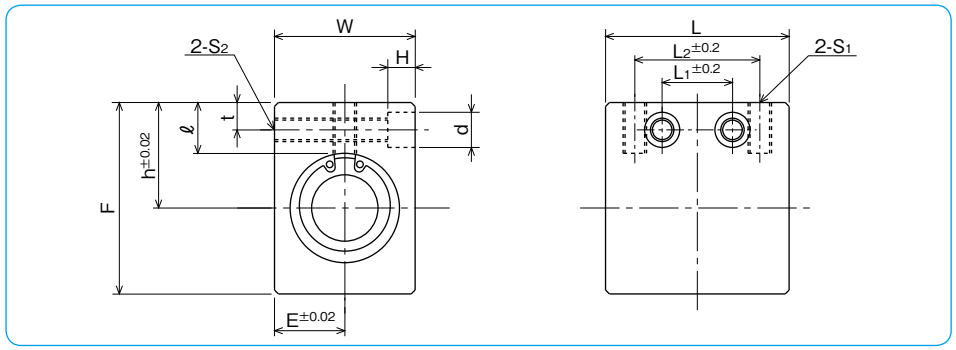

part number	inner contact diameter	tolerance	major dimensions: outer dimensions h	E	W	L	F	mounting dimensions L2	S1	ℓ	L1	t	S2	d	H	basic load rating dynamic C	static Co	allowable revolutions per minute	mass
	mm	μm	mm	mm	mm	mm	mm	mm		mm	mm	mm		mm	mm	N	N	rpm	g
AK 6R	6	+4 −5	14	8	16	27	22	18	M4	8	9	5	M4	6	5	78	176	300	27
AK 8R	8		16	10	20	32	26	20	M5	8.5	10	5	M4	6	5	137	314	300	48
AK10R	10		19	13	26	39	32	27	M6	9.5	15	6	M5	8	6	157	372	300	94
AK12R	12	+3 −6	20	14	28	40	34	27	M6	9.5	15	6	M5	8	6	274	588	300	105
AK13R	13		25	15	30	42	43	28	M6	13.5	16	7	M6	9	7	323	686	300	151
AK16R	16		27	18	36	47	49	32	M6	13	18	7	M6	9	7	451	882	250	238
AK20R	20	+3 −7	31	21	42	52	54	36	M8	15	18	8	M8	11	8	647	1,180	250	328
AK25R	25		37	26	52	69	65	42	M10	17	22	9	M10	14	10	882	1,860	250	669
AK30R	30		40	29	58	74	71	44	M10	17.5	22	9	M10	14	10	1,180	2,650	200	856

1N≒0.102kgf

AK-RW TYPE

−Double-Wide Compact Block type−

part number structure

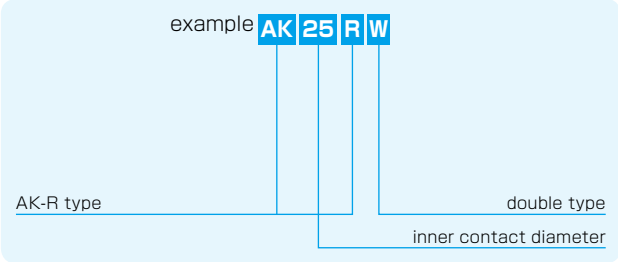

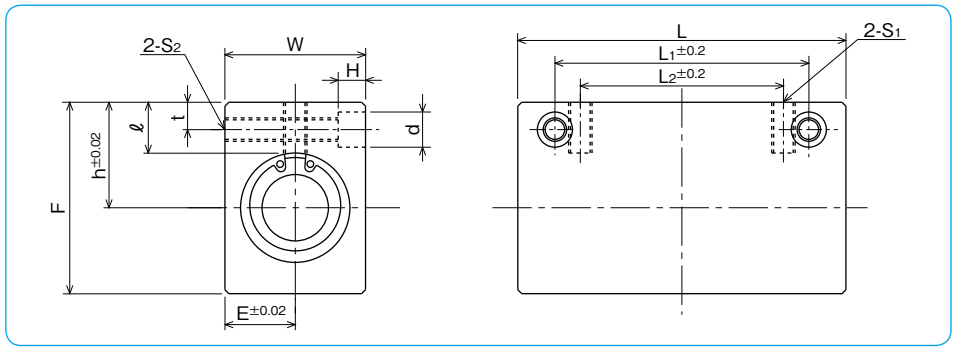

part number	inner contact diameter	tolerance	major dimensions: outer dimensions h	E	W	L	F	mounting dimensions L2	S1	ℓ	L1	t	S2	d	H	basic load rating dynamic C	static Co	allowable revolutions per minute	mass
	mm	μm	mm	mm	mm	mm	mm	mm		mm	mm	mm		mm	mm	N	N	rpm	g
AK 6RW	6	+4 −5	14	8	16	46	22	20	M4	8	30	5	M4	6	5	126	352	300	48
AK 8RW	8		16	10	20	56	26	30	M5	8.5	42	5	M4	6	5	222	628	300	89
AK10RW	10		19	13	26	68	32	36	M6	9.5	50	6	M5	8	6	254	744	300	175
AK12RW	12	+3 −6	20	14	28	70	34	36	M6	9.5	50	6	M5	8	6	444	1,180	300	196
AK13RW	13		25	15	30	74	43	42	M6	13.5	55	7	M6	9	7	523	1,370	300	281
AK16RW	16		27	18	36	84	49	52	M6	13	65	7	M6	9	7	731	1,760	250	450
AK20RW	20	+3 −7	31	21	42	94	54	58	M8	15	70	8	M8	11	8	1,050	2,360	250	626
AK25RW	25		37	26	52	128	65	80	M10	17	100	9	M10	14	10	1,430	3,720	250	1,299
AK30RW	30		40	29	58	138	71	90	M10	17.5	110	9	M10	14	10	1,910	5,300	200	1,662

1N≒0.102kgf

www.bergab.ru Берг АБ bergab@ya.ru Тел. (495)-228-06-21, факс (495) 223-3071

www.bergab.ru Берг АБ bergab@ya.ru Тел. (495)-228-06-21, факс (495) 223-3071

SMP-R TYPE

—Pillow Block type—

part number structure

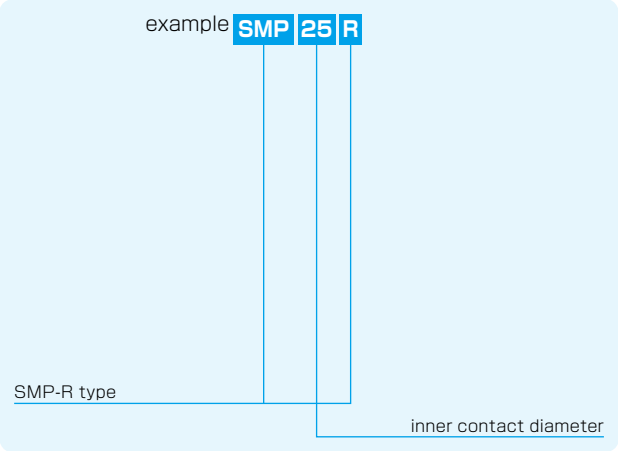

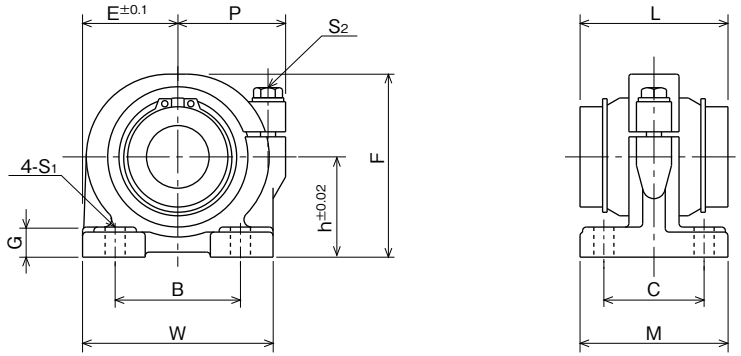

part number	inner contact diameter mm	tolerance μm	h mm	E mm	W mm	L mm	F mm	G mm	M mm
	major dimensions					outer dimensions			
SMP13R	13	+3 −6	25	25	50	32	46	8	36
SMP16R	16		29	27.5	55	37	53	10	40
SMP20R	20	+3 −7	34	32.5	65	42	62	12	48
SMP25R	25		40	38	76	59	73	12	59
SMP30R	30		45	42.5	85	64	84	15	69
SMP40R	40	+3/−8	60	62	124	80	112	18	86

P mm	mounting dimensions B mm	C mm	S1 mm	adjustment screw size S2	basic load rating dynamic C N	static Co N	allowable revolutions per minute rpm	mass g	part number
30	30	26	7 (M5)	M5	323	686	300	266	**SMP13R**
32	35	29	7 (M5)	M5	451	882	250	369	**SMP16R**
37	40	35	8 (M6)	M6	647	1,180	250	690	**SMP20R**
43	50	40	8 (M6)	M6	882	1,860	250	970	**SMP25R**
49	58	46	10 (M8)	M8	1,180	2,650	200	1,420	**SMP30R**
68	76	64	12 (M10)	M10	1,960	4,020	200	3,585	**SMP40R**

1N≒0.102kgf

www.bergab.ru Берг АБ bergab@ya.ru Тел. (495)-228-06-21, факс (495) 223-3071

www.bergab.ru Берг АБ bergab@ya.ru Тел. (495)-228-06-21, факс (495) 223-3071

SLIDE ROTARY BUSH RK TYPE

NB's RK type slide rotary bush is a highly accurate and high load capacity bearing providing smooth continuous linear and rotational motions. Its structure imposes no constraints on linear and rotational motions. It is much more compact than a standard slide bush with separate rotational bearing.

STRUCTURE AND ADVANTAGES

The RK type slide rotary bush uses a retainer similar to that used in the SR type stroke bush. This retainer gives a smooth motion in a high rotational application.
SM type slide bush is incorporated, providing the stable and smooth linear motion.
Relatively large ball elements are used for high load capacity.

1. A smooth unlimited linear and rotational motion is obtained.
2. There is no need to machine separate housing.
3. High accuracy is ensured for extended period of usage.
4. Its high compatibility eliminates replacement problems.
5. High rigidity enables it to withstand an unbalanced load and large load.

※For best performance, please select tolerance of h5 for the shaft.

Figure E-6 Structure of RK Slide Rotary Bush

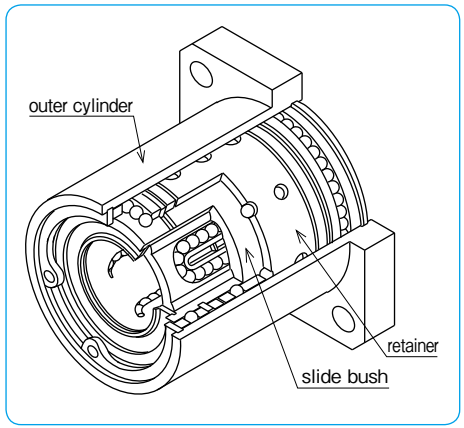

Calculation of Life:

$$L=\left(\frac{f_H \cdot f_T \cdot f_C}{f_W} \cdot \frac{C}{P}\right)^3 \times 50$$

L: rated life (km) f_H: hardness coefficient
f_T: temperature coefficient f_C: contact coefficient
f_W: applied load coefficient
C: basic dynamic load rating (N) P: applied load (N)
※Refer to page Eng-5 for the coefficients.

RK TYPE

part number structure

example RK 25 G UU-OH

- RK type
- inner contact diameter (dr)
- resin retainer
- seals on both sides
- oil hole
  blank: without oil hole
  OH: with oil hole *

*Oil hole is for rotary-portion lubrication.

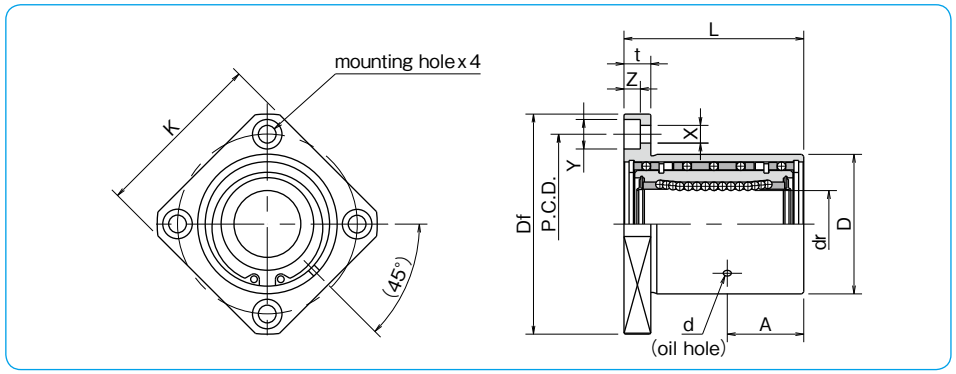

part number	major dimensions														basic load rating		allowable revolutions	mass
	dr		D		L		A	d	flange						dynamic	static	per minute	
		tolerance		tolerance		tolerance			Df	K	t	P.C.D.	X×Y×Z		C	Co		
	mm	μm	mm	μm	mm	mm	mm	mm	mm	mm	mm	mm	mm		N	N	rpm	g
RK12GUU	12	0	32	0	36		15	2	54	42	8	43	5.5×9×5.1		510	784	500	180
RK16GUU	16	−9	40	−25	45		19.5	2	62	50	8	51	5.5×9×5.1		774	1,180	500	280
RK20GUU	20	0	45		50	±0.3	21.5	3	74	58	10	60	6.6×11×6.1		882	1,370	400	420
RK25GUU	25	−10	52	0	67		28.5	3	82	64	10	67	6.6×11×6.1		980	1,570	400	680
RK30GUU	30		60	−30	74		31	3	96	75	13	78	9×14×8.1		1,570	2,740	400	990

1N≒0.102kgf

www.bergab.ru Берг АБ bergab@ya.ru Тел. (495)-228-06-21, факс (495) 223-3071

SHAFT

www.bergab.ru Берг АБ bergab@ya.ru Тел. (495)-228-06-21, факс (495) 223-3071

SHAFT

The NB shaft can be used in a wide range of applications as a mechanical component from straight shaft to spindle shaft. NB's expertise in machining and heat-treatment turns into manufacturing spindle shaft, roll shaft, and general machinery shaft for rotational motion. NB's high accuracy technology answers various shaft machining requirements.

ADVANTAGES

Advanced Machining Technology

NB performs a wide variety of highly accurate machining processes to provide custom shafting from relatively simple machining, such as tapping and shaft stepping to the more demanding high-speed rotating shafts and spindles. NB can also answer the special grinding and bore machining requirements.

Excellent Wear Resistance

Most commonly used materials are high-carbon chromium bearing steel (SUJ2) and martensite stainless steel (SUS440C or equivalent). NB's advanced heat-treatment technology gives these materials an excellent wear resistance by quenching and tempering to achieve a uniform hardened layer in the circumferential and axial directions. The cross-sectional picture below shows the hardened layer-depth of the NB shaft.

Hardened Layer
(cross section)

Surface Roughness

Precision grinding results in a surface roughness of less than 0.4 Ra.

Wide Selection of Shaft Types

SN type, SNS type, SNT type,
SNB, SNSB type (Center-lined tapped shaft)
SNW, SNWS type (Inch shaft)
SNW-PD, SNWS-PD type (Inch, pre-drilled shaft)
Spindle shaft, roll shaft

Special Requirements

Based on the customer drawings and specifications NB will answer the customer requirements in material (SCM, SKS etc.), heat-treatment, surface treatment, etc.

Shaft Supporter and Shaft Support Rail

These components ease the shaft installation and help save the design/assembling time. (refer to page F-14)

FIT Series

This series achieves the best-fit clearance adjustment between slide bush and shaft. (refer to page F-24)

Figure F-1 Radial Clearance between Slide Bush and Shaft

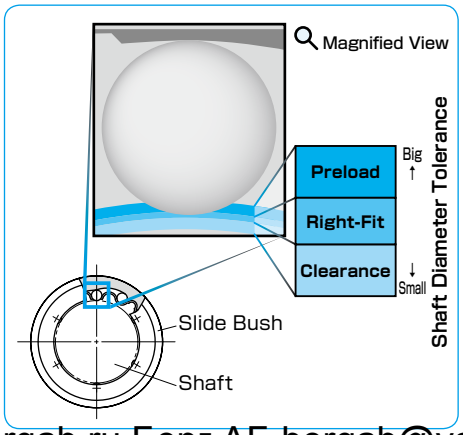

TYPES

SN/SNS/SNT type (NB Shaft)
SNW/SNWS type (Inch Shaft)

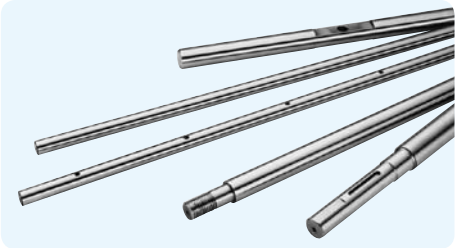

NB shaft is a high-precision shaft that can be used with slide bush or any other bearings. A wide range of machining is provided for customer drawings and requirements.

Table F-1 Specifications

type	SN type	SNS type	SNT type
material	SUJ2	equivalent to SUS440C	SUJ2 (hollow shaft)
outer diameter tolerance	g6 or to be specified		
hardness	60HRC or more	56HRC or more	60HRC or more
surface roughness	less than 0.4Ra		
page	page F-6	page F-7	page F-8

Center-lined tapped shafts are standardized series for easy selection that can be used with the SA shaft support rails. (refer to page F-18)

SNB/SNSB type (NB Center-lined Tapped Shaft)
SNW-PD/SNWS-PD type (Inch Shaft, Pre-drilled Shaft)

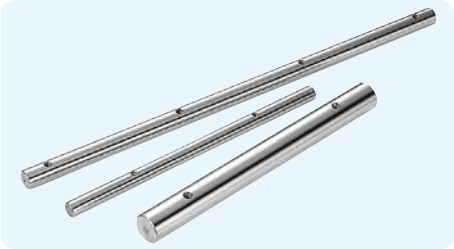

Table F-2 Specifications

type	SNB type	SNSB type
material	SUJ2	equivalent to SUS440C
outer diameter tolerance	g6 or to be specified	
hardness	60HRC or more	56HRC or more
surface roughness	less than 0.4Ra	
page	page F-9	

The SNW and SNWS types are inch dimensional shafts with the same specifications as SN/SNS type. (refer to page F-10,11) SNW-PD and SNWS-PD types are standardized series that can be used with the WA shaft support rails. (refer to page F-12,13,22)

Shaft Supporter and Shaft Support Rail

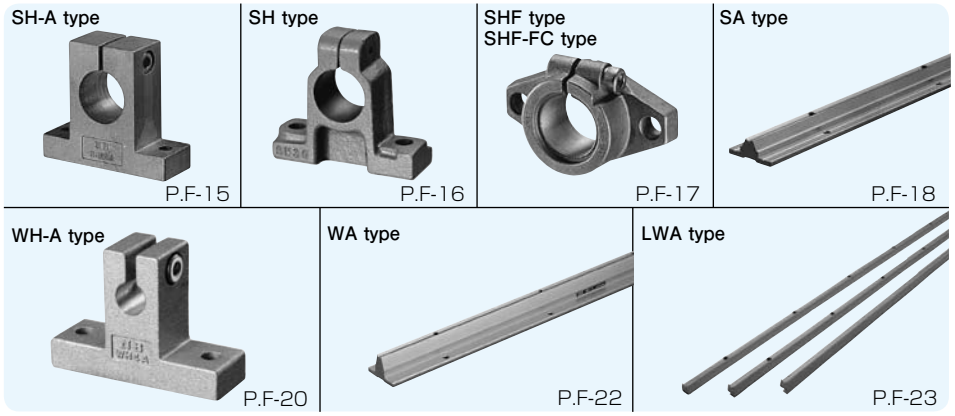

Special Specifications

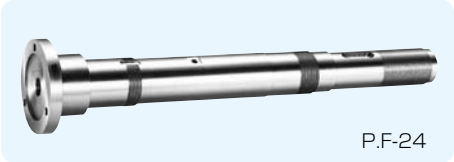

Based on drawings and specifications NB manufactures spindle shafts, roll shafts that are for the rotary motion. From material, heat-treatment (hardening/tempering), surface treatment, etc. NB meets customer requirements. Please contact NB for details.

www.bergab.ru Берг АБ bergab@ya.ru Тел. (495)-228-06-21, факс (495) 223-3071

www.bergab.ru Берг АБ bergab@ya.ru Тел. (495)-228-06-21, факс (495) 223-3071

CALCULATION OF DEFLECTION AND DEFLECTION ANGLE

The following formulas are used to obtain the deflection and its angle of the shaft. Typical conditions are listed in Table F-3.

Table F-3 Formulas for Calculating Deflection and Deflection Angle

	support method	specification	formula for deflection	formula for deflection angle
1	support | support	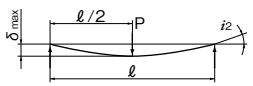	$\delta_{max}=\frac{P\ell^3}{48EI}=P\ell^3C$	$i_1=0$ $i_2=\frac{P\ell^2}{16EI}=3P\ell^2C$
2	fixed | fixed	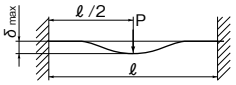	$\delta_{max}=\frac{P\ell^3}{192EI}=\frac{1}{4}P\ell^3C$	$i_1=0$ $i_2=0$
3	support | support	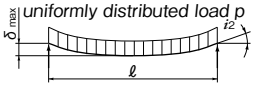	$\delta_{max}=\frac{5p\ell^4}{384EI}=\frac{5}{8}p\ell^4C$	$i_2=\frac{p\ell^3}{24EI}=2p\ell^3C$
4	fixed | fixed	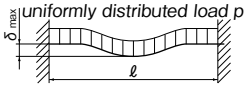	$\delta_{max}=\frac{p\ell^4}{384EI}=\frac{1}{8}p\ell^4C$	$i_2=0$
5	support | support	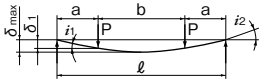	$\delta_1=\frac{Pa^3}{6EI}\left(2+\frac{3b}{a}\right)=8Pa^3\left(2+\frac{3b}{a}\right)C$ $\delta_{max}=\frac{Pa^3}{24EI}\left(\frac{3\ell^2}{a^2}-4\right)=2Pa^3\left(\frac{3\ell^2}{a^2}-4\right)C$	$i_1=\frac{Pab}{2EI}=24PabC$ $i_2=\frac{Pa(a+b)}{2EI}=24Pa(a+b)C$
6	fixed | fixed	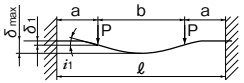	$\delta_1=\frac{Pa^3}{6EI}\left(2-\frac{3a}{\ell}\right)=8Pa^3\left(2-\frac{3a}{\ell}\right)C$ $\delta_{max}=\frac{Pa^3}{24EI}\left(2+\frac{3b}{a}\right)=2Pa^3\left(2+\frac{3b}{a}\right)C$	$i_1=\frac{Pa^2b}{2EI\ell}=\frac{24Pa^2bC}{\ell}$ $i_2=0$
7	fixed | free	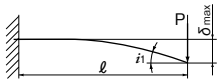	$\delta_{max}=\frac{P\ell^3}{3EI}=16P\ell^3C$	$i_1=\frac{P\ell^2}{2EI}=24P\ell^2C$ $i_2=0$
8	fixed | free	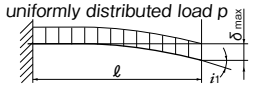	$\delta_{max}=\frac{p\ell^4}{8EI}=6p\ell^4C$	$i_1=\frac{p\ell^3}{6EI}=8p\ell^3C$ $i_2=0$
9	support | support	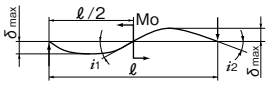	$\delta_{max}=\frac{\sqrt{3}Mo\,\ell^2}{216EI}=\frac{2\sqrt{3}}{9}=Mo\,\ell^2C$	$i_1=\frac{Mo\,\ell}{12EI}=4Mo\,\ell C$ $i_2=\frac{Mo\,\ell}{24EI}=2Mo\,\ell C$
10	fixed | fixed	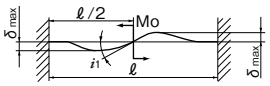	$\delta_{max}=\frac{Mo\,\ell^2}{216EI}=\frac{2}{9}=Mo\,\ell^2C$	$i_1=\frac{Mo\,\ell}{16EI}=3Mo\,\ell C$ $i_2=0$

δ_1: deflection at the concentrated load point (mm) δ_{max}: maximum deflection (mm) i_1: deflection angle at the concentrated load point (rad)
i_2: deflection angle at the support point (rad) Mo: moment (N・mm) P: concentrated load (N)
p: uniformly distributed load (N/mm) a,b: concentrated load point distance (mm) ℓ: span (mm) I: geometrical moment of inertia (mm^4)
E: modulus of direct elasticity (SUJ2) 2.06×10^5 (N/mm^2) (SUS) 2.0×10^5 (N/mm^2) C: 1/48EI (1/N・mm^2)

The Geometrical moment of inertia (I) is obtained using the following formulas:

● For solid shaft

$$I=\frac{\pi D^4}{64}$$

● For hollow shaft

$$I=\frac{\pi}{64}(D^4-d^4)$$

I: geometrical moment of inertia (mm^4)
D: outer diameter (mm) d: inner diameter (mm)

The values of the geometrical moment of inertia and C (=1/48 EI) for NB shafts are listed in Table F-4 and F-5.

Calculation Examples

1. Calculating the maximum deflection of a 30mm shaft with a 500mm span when a concentrated load of 980 N is applied at the mid-point of the shaft … (neglecting the shaft weight)

①In case the support method is support-support:
From the given conditions, P = 980 N, ℓ = 500mm
From Table F-4, C for an outer diameter of 30 mm, $C=2.54\times10^{-12}$ (N・mm^2).
Substituting these values into the corresponding formula (No. 1) in Table F-3,
$\delta max=P\ell^3C=0.31$ (mm)

② In case the support method is fixed-fixed:
Substituting the values into the corresponding formula (No. 2) given in Table F-3,
$\delta_{max}=\frac{1}{4}P\ell^3C=0.08$ (mm)

2.Calculating the maximum deflection of a 60mm shaft with an inner diameter of 32 mm and a 2,000 mm span by its own weight …

From Table F-5, C for an outer diameter of 60 mm, $C=1.73\times10^{-13}$ (N・mm^2)
The mass per unit length of a shaft with an outer diameter of 60 mm and an inner diameter of 32 mm is 15.9kg/m. Therefore, a uniformly distributed load of 0.156 N/mm is applied. Substituting these values into the formula (No. 3) given in Table F-3.
$\delta_{max}=\frac{5}{8}p\ell^4C=0.27$ (mm)

Table F-4 Solid Shaft

outer diameter D (mm)	geometrical moment of inertia I (mm^4)	C=1/48EI (1/N・mm^2)
3	3.98	2.54×10^{-8}
4	1.26×10	8.03×10^{-9}
5	3.07×10	3.29×10^{-9}
6	6.36×10	1.59×10^{-9}
8	2.01×10^2	5.03×10^{-10}
10	4.91×10^2	2.06×10^{-10}
12	1.02×10^3	9.91×10^{-11}
13	1.40×10^3	7.22×10^{-11}
15	2.49×10^3	4.06×10^{-11}
16	3.22×10^3	3.14×10^{-11}
20	7.85×10^3	1.29×10^{-11}
25	1.92×10^4	5.27×10^{-12}
30	3.98×10^4	2.54×10^{-12}
35	7.37×10^4	1.37×10^{-12}
40	1.26×10^5	8.03×10^{-13}
50	3.07×10^5	3.29×10^{-13}
60	6.36×10^5	1.59×10^{-13}
80	2.01×10^6	5.03×10^{-14}
100	4.91×10^6	2.06×10^{-14}
120	1.02×10^7	9.91×10^{-15}
150	2.49×10^7	4.06×10^{-15}

Table F-5 Hollow Shaft

outer diameter D (mm)	inner diameter d (mm)	geometrical moment of inertia I (mm^4)	C=1/48EI (1/N・mm^2)
6	2	6.28×10	1.61×10^{-9}
8	3	1.97×10^2	5.13×10^{-10}
10	4	4.78×10^2	2.11×10^{-10}
12	5	9.87×10^2	1.02×10^{-10}
13	6	1.34×10^3	7.55×10^{-11}
16	8	3.02×10^3	3.36×10^{-11}
20	10	7.36×10^3	1.37×10^{-11}
25	15	1.67×10^4	6.06×10^{-12}
30	16	3.65×10^4	2.77×10^{-12}
35	19	6.73×10^4	1.50×10^{-12}
40	20	1.18×10^5	8.57×10^{-13}
50	26	2.84×10^5	3.56×10^{-13}
60	32	5.85×10^5	1.73×10^{-13}
80	48	1.75×10^6	5.78×10^{-14}
100	60	4.27×10^6	2.37×10^{-14}

www.bergab.ru Берг АБ bergab@ya.ru Тел. (495)-228-06-21, факс (495) 223-3071

www.bergab.ru Берг АБ bergab@ya.ru Тел. (495)-228-06-21, факс (495) 223-3071

SN TYPE

– NB Shaft –

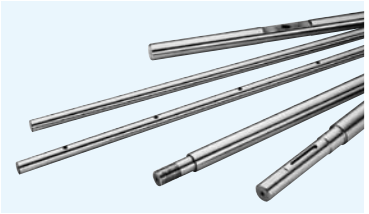

part number structure

example **SN 25 h5 × 576**

- SN type
- outer diameter (D)
- outer diameter tolerance g6 when blank
- length (L)

straight

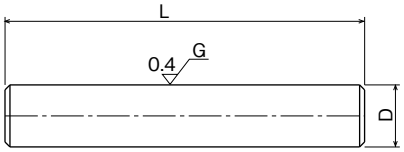

machined (example)

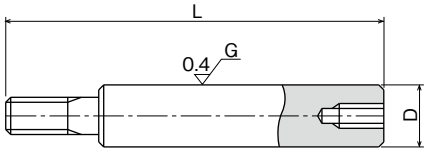

part number	outer diameter D mm	tolerance g6 μm	length L mm	mass Kg/m
SN 3	3	−2/−8	50 ↔ 400	0.06
SN 4	4	− 4 −12	100 ↔ 500	0.10
SN 5	5		100 ↔ 700	0.16
SN 6	6		100 ↔ 1000	0.23
SN 8	8	− 5 −14	200 ↔ 1500	0.40
SN 10	10		200 ↔ 2000	0.62
SN 12	12	− 6 −17	200 ↔ 3000	0.89
SN 13	13		200 ↔ 3000	1.04
SN 15	15		300 ↔ 4000	1.39
SN 16	16		300 ↔ 4000	1.58
SN 20	20	− 7 −20	300 ↔ 5000	2.47
SN 25	25		300 ↔ 6000	3.85
SN 30	30		300 ↔ 6000	5.55
SN 35	35	− 9 −25	400 ↔ 6000	7.55
SN 40	40		400 ↔ 6000	9.87
SN 50	50		500 ↔ 6000	15.4
SN 60	60	−10	600 ↔ 6000	22.2
SN 80	80	−29	800 ↔ 6000	39.5
SN100	100	−12	1000 ↔ 6000	61.7
SN120	120	−34	1500 ↔ 4500	88.8
SN150	150	−14/−39	1500 ↔ 4500	139

material: high-carbon chromium bearing steel (SUJ2) hardness: 60HRC (HV697) or more
Tolerances other than g6 are available upon request.

SNS TYPE

– NB Stainless Steel Shaft –

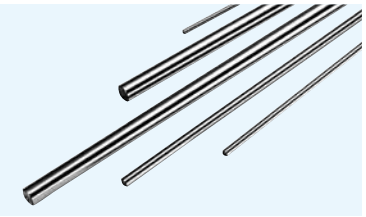

part number structure

example **SNS 25 h5 × 576**

- SNS type
- outer diameter (D)
- outer diameter tolerance g6 when blank
- length (L)

straight

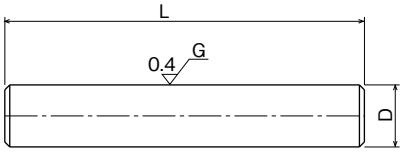

machined (example)

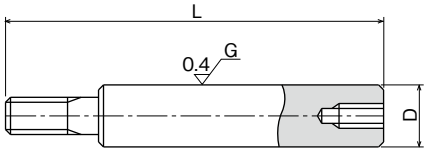

part number	outer diameter D mm	tolerance g6 μm	length L mm	mass Kg/m
SNS 3	3	−2/−8	50 ↔ 300	0.06
SNS 4	4	− 4 −12	100 ↔ 400	0.10
SNS 5	5		100 ↔ 500	0.16
SNS 6	6		100 ↔ 600	0.22
SNS 8	8	− 5 −14	200 ↔ 1000	0.39
SNS 10	10		200 ↔ 1500	0.61
SNS 12	12	− 6 −17	200 ↔ 2500	0.88
SNS 13	13		200 ↔ 3000	1.03
SNS 16	16		300 ↔ 4000	1.56
SNS 20	20	− 7 −20	300 ↔ 5000	2.43
SNS 25	25		300 ↔ 6000	3.80
SNS 30	30		300 ↔ 6000	5.48
SNS 35	35	− 9 −25	400 ↔ 6000	7.23
SNS 40	40		400 ↔ 6000	9.44
SNS 50	50		500 ↔ 6000	15.2
SNS 60	60	−10	600 ↔ 6000	21.9
SNS 80	80	−29	800 ↔ 6000	39.0
SNS100	100	−12/−34	1000 ↔ 6000	60.9

material: martensite stainless steel (equivalent to SUS440C)
hardness: 56HRC (HV613) or more
The maximum length of hardening is up to 4500mm for shafts with diameter over 80mm.
Tolerances other than g6 are available upon request.

www.bergab.ru Берг АБ bergab@ya.ru Тел. (495)-228-06-21, факс (495) 223-3071

www.bergab.ru Берг АБ bergab@ya.ru Тел. (495)-228-06-21, факс (495) 223-3071

SNT TYPE

– NB Hollow Shaft –

part number structure

example **SNT 25 h5 × 576**

- SNT type
- outer diameter (D)
- outer diameter tolerance g6 when blank
- length (L)

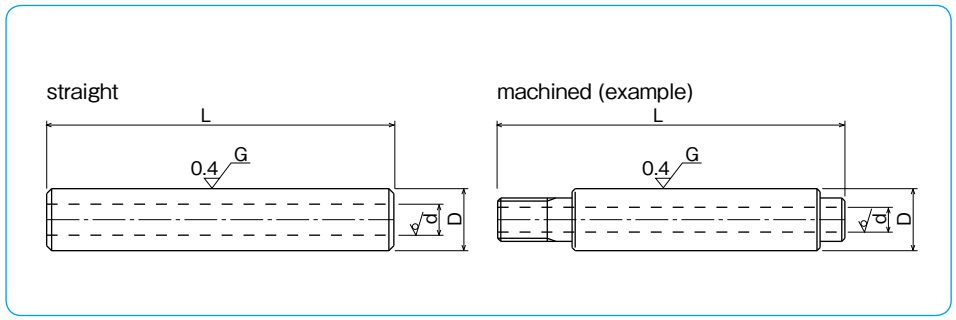

part number	outer diameter D mm	tolerance g6 μm	inner diameter d mm	length L mm	mass Kg/m
SNT 6	6	−4/−12	2	100 ↔ 400	0.20
SNT 8	8	−5 −14	3	200 ↔ 600	0.34
SNT 10	10		4	200 ↔ 1000	0.52
SNT 12	12	−6 −17	5	200 ↔ 1500	0.73
SNT 13	13		6	200 ↔ 1500	0.82
SNT 16	16		8	300 ↔ 2500	1.18
SNT 20	20	−7 −20	10	300 ↔ 4000	1.85
SNT 25	25		15	300 ↔ 4000	2.46
SNT 30	30		16	300 ↔ 4500	3.97
SNT 35	35	−9 −25	19	400 ↔ 4500	5.32
SNT 40	40		20	400 ↔ 4500	7.39
SNT 50	50		26	500 ↔ 4500	11.3
SNT 60	60	−10 −29	32	600 ↔ 4500	15.9
SNT 80	80		48	800 ↔ 4500	25.3
SNT100	100	−12/−34	60	1000 ↔ 4500	39.5

material: high-carbon chromium bearing steel (SUJ2)
hardness: 60HRC (HV697) or more
Tolerances other than g6 are available upon request.

NB CENTER-LINED TAPPED SHAFT

A larger diameter shaft can overcome problems in maintaining precision functionality when a high or unbalanced load is applied. A combination of the center-lined tapped shaft together with the SA type support rail is ideal in such cases. (see pages F-18,19) The center-lined tapped shaft is standardized to simplify shaft selection.

part number structure

example **SNSB 25 × 576**

- material
  SNB: SUJ2
  SNSB: equivalent to SUS440C
- outer diameter (D) g6 when blank
- length (L)

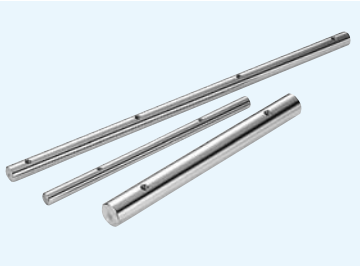

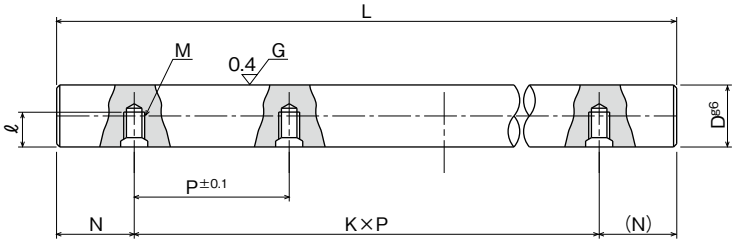

$N: \frac{L-K\times P}{2}$

K: number of pitches

NB Center-Lined Tapped Shaft

part number	outer diameter D mm	tolerance g6* μm	pitch P mm	screw size M	tap depth ℓ mm	maximum length Lmax mm
SNB10	10	−5/−14	100	M4	4.5	1,500
SNB12	12	−6 −17	100	M4	5.5	1,800
SNB13	13		100	M4	6	2,000
SNB16	16		150	M5	7	2,000
SNB20	20	−7 −20	150	M6	9	3,000
SNB25	25		200	M6	12	4,000
SNB30	30		200	M8	15	4,500
SNB35	35	−9 −25	200	M8	15	5,000
SNB40	40		300	M8	18	6,000
SNB50	50		300	M10	22	6,000

material: high-carbon chromium bearing steel (SUJ2)
hardness: 60HRC (HV697) or more
*g6 is a standard tolerance of the outer diameter.

NB Center-Lined Tapped Stainless Steel Shaft

part number	outer diameter D mm	tolerance g6* μm	pitch P mm	screw size M	tap depth ℓ mm	maximum length Lmax mm
SNSB16	16	−6/−17	150	M5	7	2,000
SNSB20	20	−7 −20	150	M6	9	3,000
SNSB25	25		200	M6	12	4,000
SNSB30	30		200	M8	15	4,500
SNSB35	35	−9 −25	200	M8	15	5,000
SNSB40	40		300	M8	18	6,000
SNSB50	50		300	M10	22	6,000

material: martensite stainless steel (equivalent to SUS440C)
hardness: 56HRC (HV613) or more
*g6 is a standard tolerance of the outer diameter.

www.bergab.ru Берг АБ bergab@ya.ru Тел. (495)-228-06-21, факс (495) 223-3071

www.bergab.ru Берг АБ bergab@ya.ru Тел. (495)-228-06-21, факс (495) 223-3071

SNW TYPE

– NB Inch Shaft –

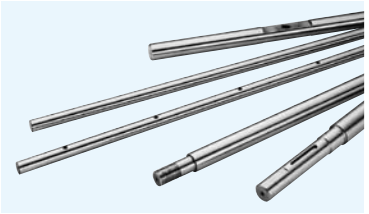

part number structure

example **SNW 24 h5 × 4000**

- SNW type
- size
- outer diameter tolerance: g6 when blank
- length (L)

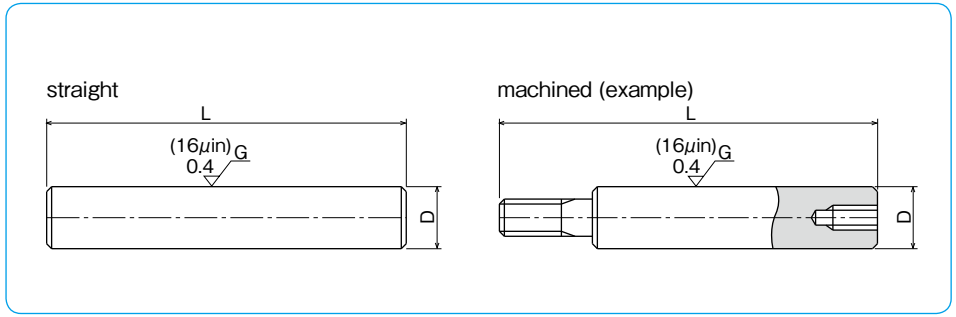

part number	outer diameter D inch / mm	tolerance g6 inch / μm	length L inch / mm	mass lbs/inch / Kg/m
SNW 4	1/4 / 6.350	−.0002 / −.0006	3.94 / 100 ↔ 39.37 / 1000	0.014 / 0.25
SNW 6	3/8 / 9.525	−5 / −14	7.84 / 200 ↔ 59.06 / 1500	0.031 / 0.56
SNW 8	1/2 / 12.700	−.0002 / −.0007	7.84 / 200 ↔ 118.11 / 3000	0.056 / 0.99
SNW10	5/8 / 15.875	−6 / −17	7.84 / 200 ↔ 157.48 / 4000	0.086 / 1.55
SNW12	3/4 / 19.050	−.0003 / −.0008	11.81 / 300 ↔ 157.48 / 4000	0.125 / 2.24
SNW16	1 / 25.400	−7 / −20	11.81 / 300 ↔ 157.48 / 4000	0.222 / 3.98
SNW20	1-1/4 / 31.750	−.0004 / −.0010	11.81 / 300 ↔ 157.48 / 4000	0.420 / 6.22
SNW24	1-1/2 / 38.100	−9 / −25	15.75 / 400 ↔ 157.48 / 4000	0.500 / 8.95
SNW32	2 / 50.800	−.0004 / −.0011	19.69 / 500 ↔ 157.48 / 4000	0.890 / 15.91
SNW40	2-1/2 / 63.500	−10 / −29	23.62 / 600 ↔ 157.48 / 4000	1.391 / 25.00
SNW48	3 / 76.200		23.62 / 600 ↔ 157.48 / 4000	2.003 / 37.92
SNW64	4 / 101.600	−.0005/−.0013 / −12/−34	39.37 / 1000 ↔ 157.48 / 4000	3.560 / 64.02

material: high-carbon chromium bearing steel (SUJ2)
hardness: 60HRC (HV697) or more
Tolerances other than g6 are available upon request.

1kg≒2.205lbs

SNWS TYPE

– NB Inch Stainless Steel Shaft –

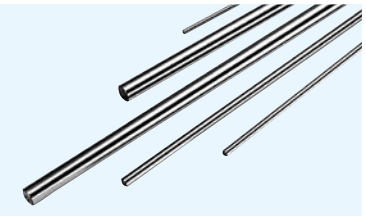

part number structure

example **SNWS 24 h5 × 4000**

- SNWS type
- size
- outer diameter tolerance: g6 when blank
- length (L)

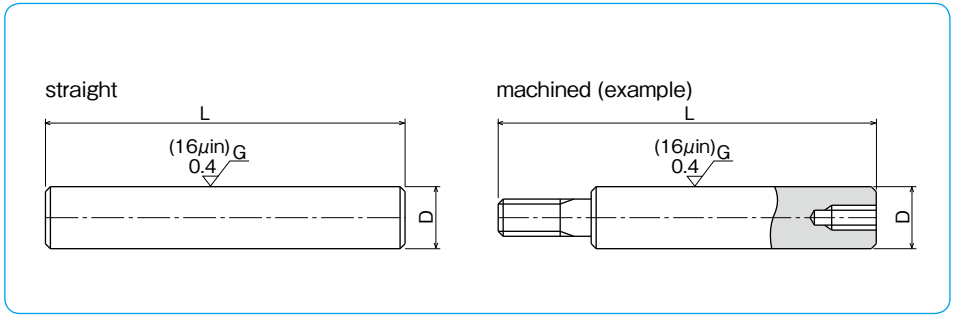

part number	outer diameter D inch / mm	tolerance g6 inch / μm	length L inch / mm	mass lbs/inch / Kg/m
SNWS 4	1/4 / 6.350	−.0002 / −.0006	3.94 / 100 ↔ 23.62 / 600	0.014 / 0.25
SNWS 6	3/8 / 9.525	−5 / −14	7.84 / 200 ↔ 39.37 / 1000	0.031 / 0.55
SNWS 8	1/2 / 12.700	−.0002 / −.0007	7.84 / 200 ↔ 98.43 / 2500	0.056 / 0.98
SNWS10	5/8 / 15.875	−6 / −17	7.84 / 200 ↔ 118.11 / 3000	0.086 / 1.54
SNWS12	3/4 / 19.050	−.0003 / −.0008	11.81 / 300 ↔ 157.48 / 4000	0.125 / 2.22
SNWS16	1 / 25.400	−7 / −20	11.81 / 300 ↔ 157.48 / 4000	0.222 / 3.95
SNWS20	1-1/4 / 31.750	−.0004 / −.0010	11.81 / 300 ↔ 157.48 / 4000	0.420 / 6.16
SNWS24	1-1/2 / 38.100	−9 / −25	15.75 / 400 ↔ 157.48 / 4000	0.500 / 8.88
SNWS32	2 / 50.800	−.0004/−.0011 / −10/−29	19.69 / 500 ↔ 157.48 / 4000	0.890 / 15.78

material: martensite stainless steel (equivalent to SUS440C)
hardness: 56HRC (HV613) or more
Tolerances other than g6 are available upon request.

1kg≒2.205lbs

www.bergab.ru Берг АБ bergab@ya.ru Тел. (495)-228-06-21, факс (495) 223-3071

www.bergab.ru Берг АБ bergab@ya.ru Тел. (495)-228-06-21, факс (495) 223-3071

SNW-PD

– NB Inch Pre-Drilled Shaft –

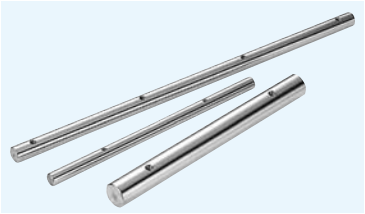

part number structure

example **SNW 24 h5 × 72 - PD**

- SNW type
- size
- outer diameter tolerance g6 when blank
- length (L in inches)
- pre-drilled shaft

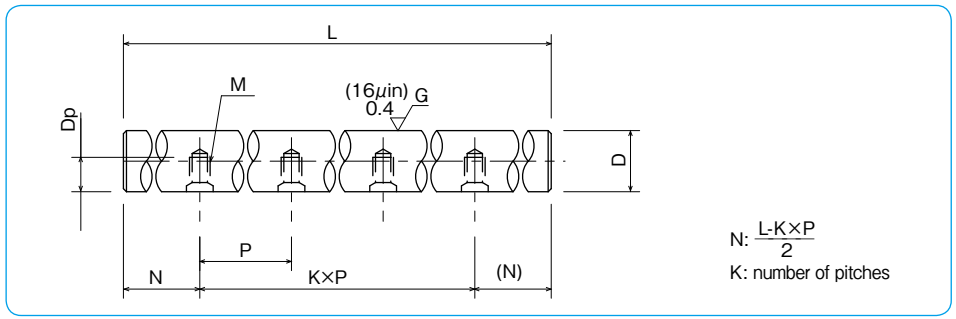

$N: \frac{L-K\times P}{2}$

K: number of pitches

part number	outer diameter D inch / mm	tolerance g6* inch/μm	pitch P inch/mm	bolt size M	tapped hole depth Dp inch/mm	maximum length L inch/mm
SNW 8-PD	1/2 12.700	−.0002 −.0007	4 101.6	# 6-32	0.280 7.1	72 1,828.8
SNW10-PD	5/8 15.875	−6 −17		# 8-32	0.350 8.9	
SNW12-PD	3/4 19.050	−.0003 −.0008	6 152.4	# 10-32	0.400 10.2	
SNW16-PD	1 25.400	−7 −20		1/4-20	0.500 12.7	
SNW20-PD	1-1/4 31.750	−.0004 −.0010		5/16-18	0.650 16.5	
SNW24-PD	1/1/2 38.100	−9 −25		3/8-16	0.700 17.8	
SNW32-PD	2 50.800	−.0004/−.0011 −10/−29	8 203.2	1/2-13	0.850 21.6	

material: high-carbon chromium bearing steel (SUJ2)
hardness: 60HRC (HV697) or more
Tolerances other than *g6 are available upon request.
Longer lengths are also available.

1kg≒2.205lbs

SNWS-PD

– NB Inch Pre-Drilled Stainless Steel Shaft –

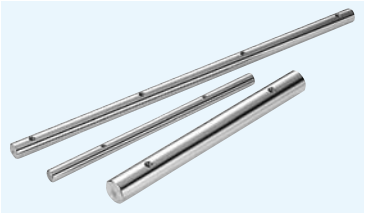

part number structure

example **SNWS 24 h5 × 72 - PD**

- SNWS type
- size
- outer diameter tolerance g6 when blank
- length (L in inches)
- pre-drilled shaft

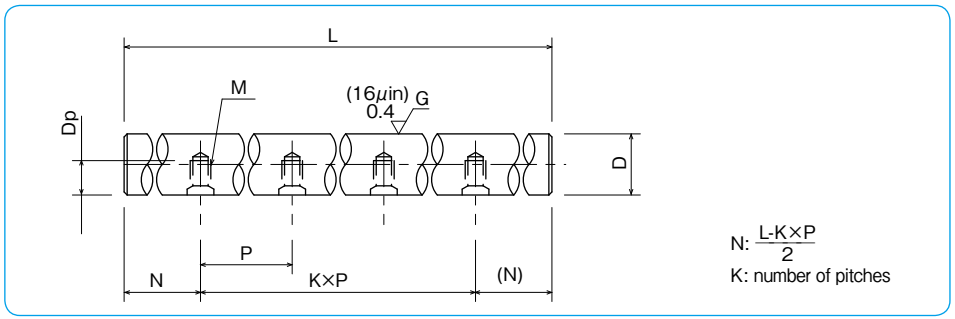

$N: \frac{L-K\times P}{2}$

K: number of pitches

part number	outer diameter D inch / mm	tolerance g6* inch/μm	pitch P inch/mm	bolt size M	tapped hole depth Dp inch/mm	maximum length L inch/mm
SNWS12-PD	3/4 19.050	−.0003 −.0008	6 152.4	#10−32	0.400 10.2	72 1,828.8
SNWS16-PD	1 25.400	−7 −20		1/4−20	0.500 12.7	
SNWS20-PD	1-1/4 31.750	−.0004 −.0010		5/16−18	0.650 16.5	
SNWS24-PD	1-1/2 38.100	−9 −25	8 203.2	3/8−16	0.700 17.8	
SNWS32-PD	2 50.800	−.0004/−.0011 −10/−29		1/2−13	0.850 21.6	

material: martensite stainless steel (equivalent to SUS440C)
hardness: 56HRC (HV613) or more
Tolerances other than *g6 are available upon request.
Longer lengths are also available.

www.bergab.ru Берг АБ bergab@ya.ru Тел. (495)-228-06-21, факс (495) 223-3071

www.bergab.ru Берг АБ bergab@ya.ru Тел. (495)-228-06-21, факс (495) 223-3071

SHAFT SUPPORTER AND SHAFT SUPPORT RAIL

These components save design/assembling time and ease shaft installation.

SH・SH-A・WH-A type

These are most commonly used compact shaft supporters. SH type is made of cast iron and SH-A/WH-A type is made of aluminum alloy.

SHF・SHF-FC type

These are flanged type shaft supporters for a compact design. SHF is made of aluminum alloy and SHF-FC (shaft diameter 35 and over) is made of cast iron.

SA・WA・LWA type (shaft support rail)

These support rails support shafts from below to avoid shaft deflection for a long-stroke/high load application. This type is made of aluminum alloy.

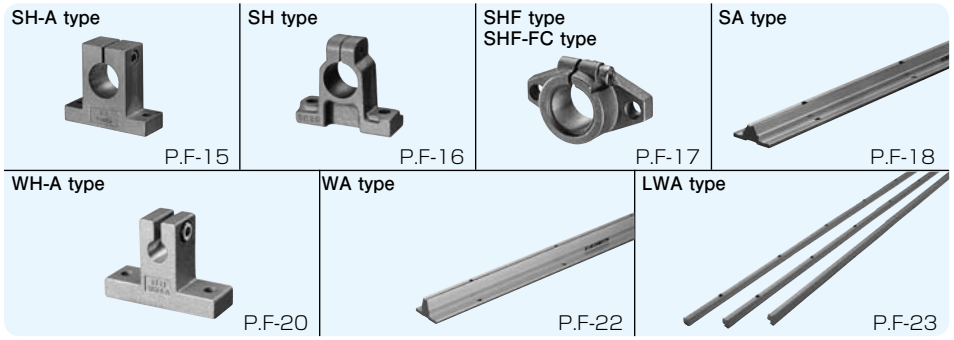

ACCURACY

The accuracy of the SA support rails are measured as shown in Figure F-2.

Figure F-2 Measurement Method

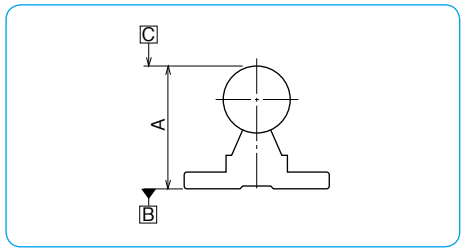

Figure F-3 Accuracy of SA type Support Rail

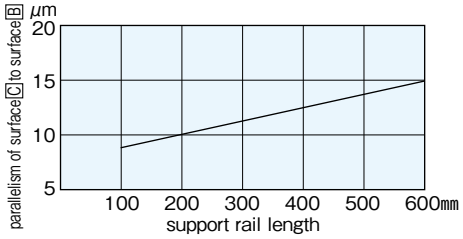

SH-A TYPE

– Shaft Supporter –

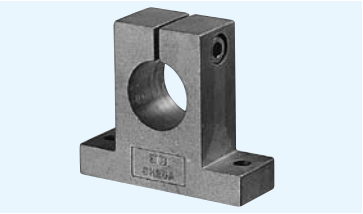

part number structure

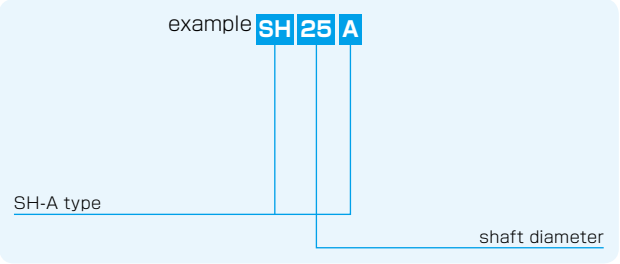

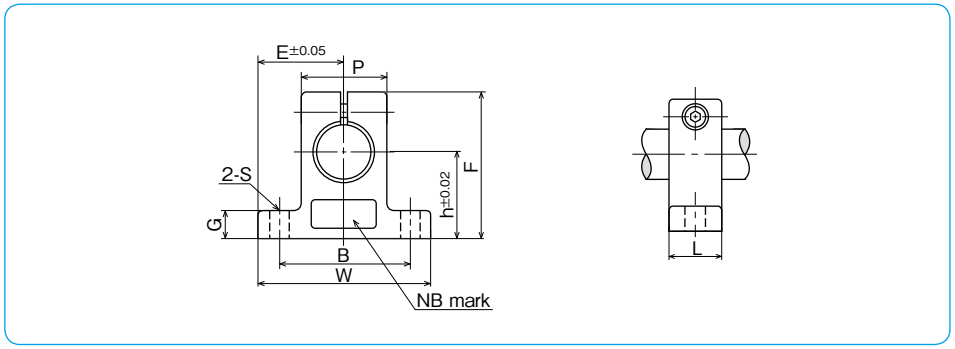

part number	shaft diameter mm	major dimensions h mm	E mm	W mm	L mm	F mm	G mm	P mm	B mm	S mm	tightening screw size	recommended torque N・m	mass g
SH 8A	8	20	21	42	14	32.8	6	18	32	5.5 (M5)	M4	2	24
SH10A	10	20	21	42	14	32.8	6	18	32	5.5 (M5)	M4	2	24
SH12A	12	23	21	42	14	37.5	6	20	32	5.5 (M5)	M4	2	30
SH13A	13	23	21	42	14	37.5	6	20	32	5.5 (M5)	M4	2	30
SH16A	16	27	24	48	16	44	8	25	38	5.5 (M5)	M4	2	40
SH20A	20	31	30	60	20	51	10	30	45	6.6 (M6)	M5	3	70
SH25A	25	35	35	70	24	60	12	38	56	6.6 (M6)	M6	5.5	130
SH30A	30	42	42	84	28	70	12	44	64	9 (M8)	M6	5.5	180
SH35A	35	50	49	98	32	82	15	50	74	11 (M10)	M8	13.5	270
SH40A	40	60	57	114	36	96	15	60	90	11 (M10)	M8	13.5	420
SH50A	50	70	63	126	40	120	18	74	100	14 (M12)	M12	29	750
SH60A	60	80	74	148	45	136	18	90	120	14 (M12)	M12	29	1,100

www.bergab.ru Берг АБ bergab@ya.ru Тел. (495)-228-06-21, факс (495) 223-3071

www.bergab.ru Берг АБ bergab@ya.ru Тел. (495)-228-06-21, факс (495) 223-3071

SH TYPE

– Shaft Supporter –

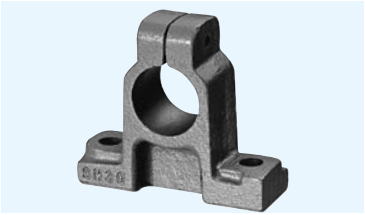

part number structure

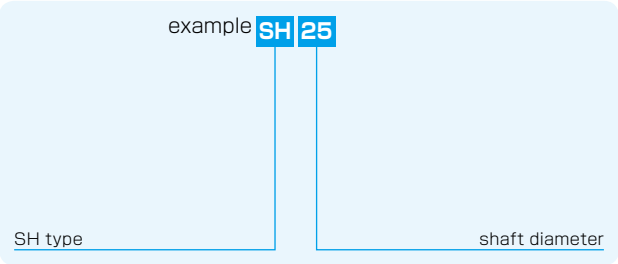

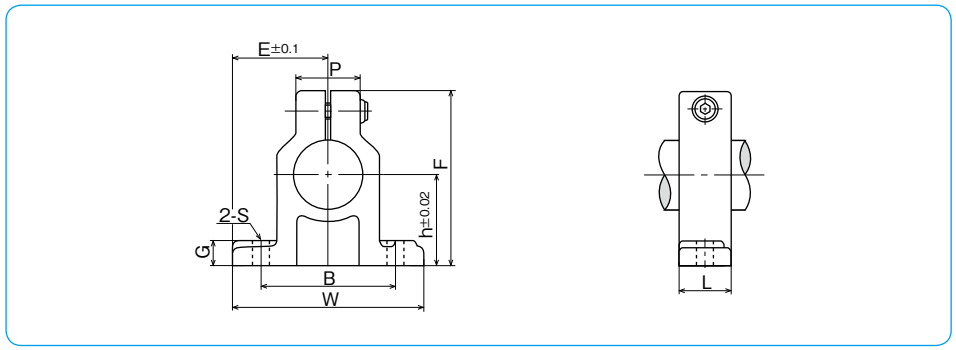

part number	shaft diameter	major dimensions									tightening screw		mass
		h	E	W	L	F	G	P	B	S	size	recommended torque	
	mm	mm	mm	mm	mm	mm	mm	mm	mm	mm		N・m	g
SH10	10	20	22	44	15	35	7	19	32	4.5 (M4)	M4	2	80
SH13	13	23	25	50	17	40	8	17	32	7 (M5)	M4	2	120
SH16	16	27	27.5	55	17	45	10	16	38	7 (M5)	M4	2	120
SH20	20	31	32.5	65	20	53	12	22	45	8 (M6)	M5	3	190
SH25	25	35	38	76	24	61	12	24	56	8 (M6)	M6	5.5	300
SH30	30	42	42.5	85	28	73	15	28	64	10 (M8)	M6	5.5	490
SH35	35	50	50	100	32	87	15	34	74	12 (M10)	M8	13.5	690
SH40	40	60	60	120	36	104	18	38	90	12 (M10)	M10	29	1,200
SH50	50	70	70	140	40	122	20	48	100	14 (M12)	M12	29	1,700
SH60	60	80	82.5	165	45	140	23	58	120	14 (M12)	M12	29	2,500

SHF TYPE

– Shaft Supporter Flange Type –

part number structure

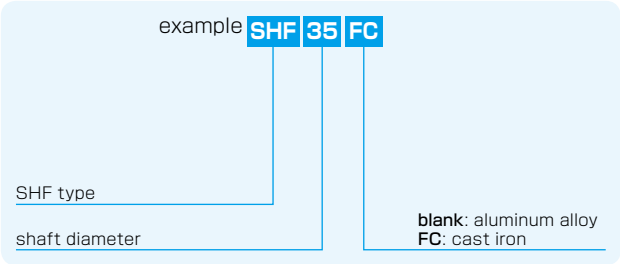

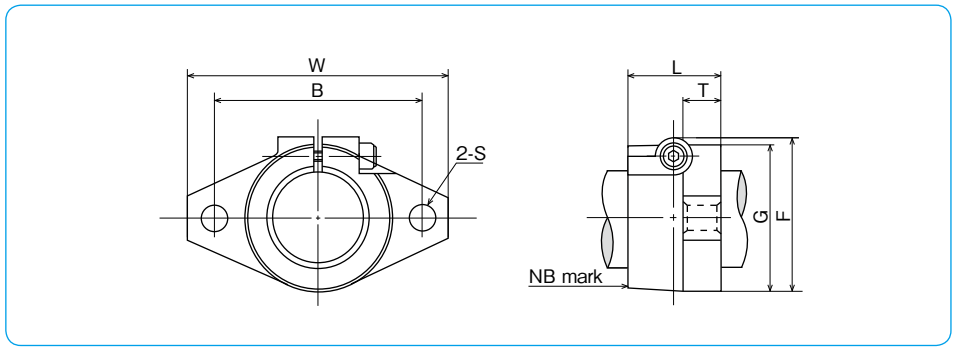

part number		shaft diameter	major dimensions							tightening screw		mass	
			W	L	T	F	G	B	S	size	recommended torque	g	
aluminum alloy	cast iron	mm	mm	mm	mm	mm	mm	mm	mm		N・m	aluminum alloy	cast iron
SHF10	–	10	43	10	5	24	20	32	5.5 (M5)	M4	2	13	–
SHF12	–	12	47	13	7	28	25	36	5.5 (M5)	M4	2	20	–
SHF13	–	13	47	13	7	28	25	36	5.5 (M5)	M4	2	20	–
SHF16	–	16	50	16	8	31	28	40	5.5 (M5)	M4	2	27	–
SHF20	–	20	60	20	8	37	34	48	7 (M6)	M5	3	40	–
SHF25	–	25	70	25	10	42	40	56	7 (M6)	M5	3	60	–
SHF30	–	30	80	30	12	50	46	64	9 (M8)	M6	5.5	110	–
SHF35	**SHF35FC**	35	92	35	14	58	50	72	12 (M10)	M8	13.5	140	380
SHF40	**SHF40FC**	40	102	40	16	67	56	80	12 (M10)	M10	29	205	510
SHF50	**SHF50FC**	50	122	50	19	83	70	96	14 (M12)	M12	29	360	890
SHF60	**SHF60FC**	60	140	60	23	95	82	112	14 (M12)	M12	29	530	1,500

www.bergab.ru Берг АБ bergab@ya.ru Тел. (495)-228-06-21, факс (495) 223-3071

www.bergab.ru Берг АБ bergab@ya.ru Тел. (495)-228-06-21, факс (495) 223-3071

SA TYPE

— Shaft Support Rail —

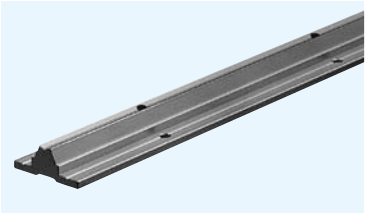

part number structure

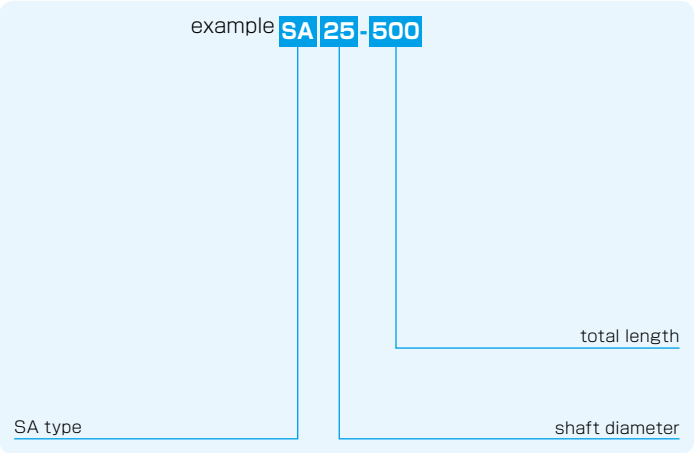

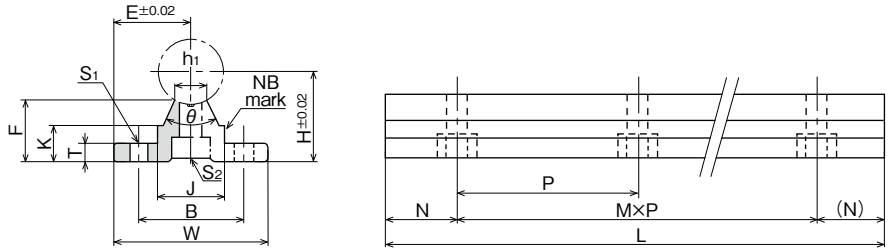

※ Mounting screws for the SN(S)B center-lined tapped shaft are included.

part number	shaft diameter mm	major dimensions H mm	E mm	W mm	L mm	F mm	T mm	K mm	J mm	h1 mm	θ	B mm	N mm	M×P mm	S1 mm	S2	mass g
SA10-200	10	18	16	32	200	13.5	4	8.9	12.4	4.7	80°	22	50	1×100	4.5	M4	110
SA10-300					300								50	2×100			160
SA10-400					400								50	3×100			220
SA10-500					500								50	4×100			270
SA10-600					600								50	5×100			330
SA13-200	13	21	17	34	200	15	4.5	9.8	15	6	80°	25	50	1×100	4.5	M4	140
SA13-300					300								50	2×100			210
SA13-400					400								50	3×100			280
SA13-500					500								50	4×100			350
SA13-600					600								50	5×100			420
SA16-200	16	25	20	40	200	17.8	5	11.7	18.5	8	80°	30	25	1×150	5.5	M5	200
SA16-300					300								75	1×150			300
SA16-400					400								50	2×150			400
SA16-500					500								25	3×150			500
SA16-600					600								75	3×150			600
SA20-200	20	27	22.5	45	200	17.7	5	10	19	8	50°	30	25	1×150	5.5	M6	200
SA20-300					300								75	1×150			300
SA20-400					400								50	2×150			400
SA20-500					500								25	3×150			510
SA20-600					600								75	3×150			610
SA25-200	25	33	27.5	55	200	21	6	12	21.5	8	50°	35	25	1×150	6.5	M6	290
SA25-300					300								50	1×200			430
SA25-400					400								100	1×200			580
SA25-500					500								50	2×200			730
SA25-600					600								100	2×200			880

part number	shaft diameter mm	major dimensions H mm	E mm	W mm	L mm	F mm	T mm	K mm	J mm	h1 mm	θ	B mm	N mm	M×P mm	S1 mm	S2	mass g
SA30-200	30	37	30	60	200	22.8	7	13	26.5	10.3	50°	40	25	1×150	6.5	M8	360
SA30-300					300								50	1×200			550
SA30-400					400								100	1×200			730
SA30-500					500								50	2×200			920
SA30-600					600								100	2×200			1,100
SA35-200	35	43	32.5	65	200	26.5	8	15.5	28	13	50°	45	25	1×150	9	M8	460
SA35-300					300								50	1×200			700
SA35-400					400								100	1×200			950
SA35-500					500								50	2×200			1,190
SA35-600					600								100	2×200			1,420
SA40-200	40	48	37.5	75	200	29.4	9	17	38	16	50°	55	25	1×150	9	M8	630
SA40-300					300								75	1×150			960
SA40-400					400								50	1×300			1,290
SA40-500					500								100	1×300			1,610
SA40-600					600								150	1×300			1,950
SA50-200	50	62	47.5	95	200	38.8	11	21	45	20	50°	70	25	1×150	11	M10	1,000
SA50-300					300								75	1×150			1,500
SA50-400					400								50	1×300			2,000
SA50-500					500								100	1×300			2,500
SA50-600					600								150	1×300			3,000

www.bergab.ru Берг АБ bergab@ya.ru Тел. (495)-228-06-21, факс (495) 223-3071

www.bergab.ru Берг АБ bergab@ya.ru Тел. (495)-228-06-21, факс (495) 223-3071

WH-A TYPE

– Shaft Supporter –

(Inch Standard)

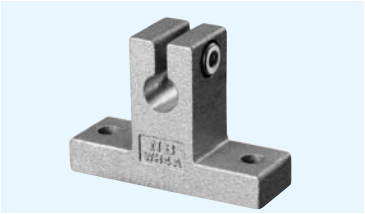

part number structure

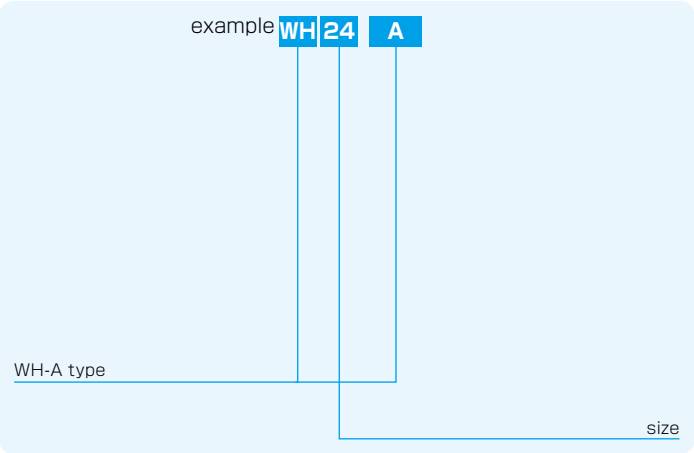

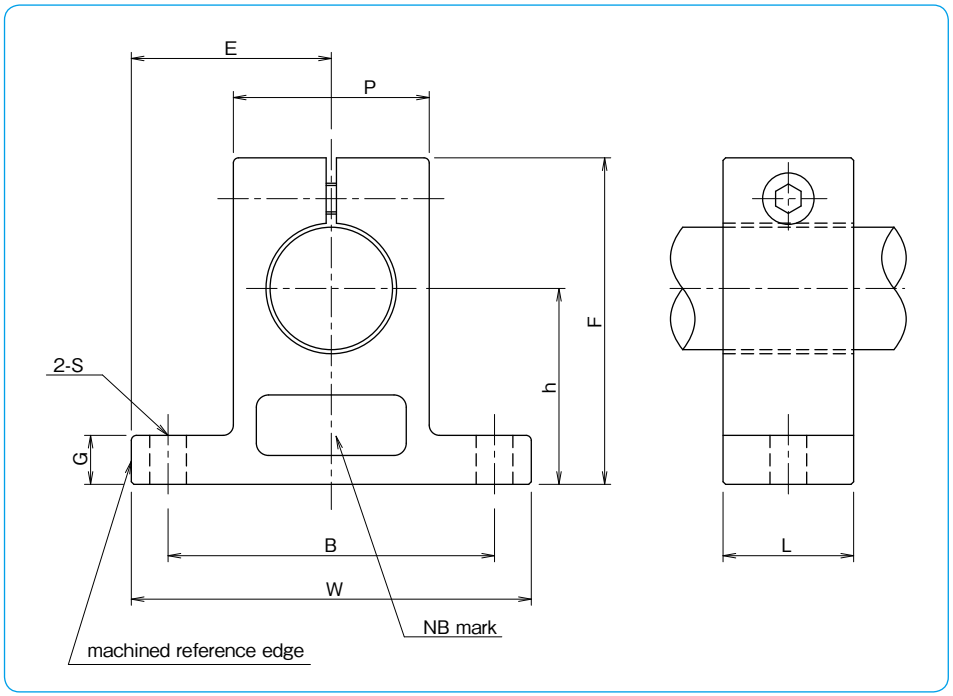

part number	shaft diameter inch	major dimensions h ±.001 inch	E ±.005 inch	W inch	L inch	F inch
WH 4A	.2500	.6875	.7500	1.500	.500	1.063
WH 6A	.3750	.7500	.8125	1.625	.563	1.187
WH 8A	.5000	1.0000	1.0000	2.000	.625	1.625
WH 10A	.6250	1.0000	1.2500	2.500	.688	1.750
WH 12A	.7500	1.2500	1.2500	2.500	.750	2.063
WH 16A	1.0000	1.5000	1.5315	3.063	1.000	2.500
WH 20A	1.2500	1.7500	1.8750	3.750	1.125	3.000
WH 24A	1.5000	2.0000	2.1875	4.375	1.250	3.437
WH 32A	2.0000	2.5000	2.7500	5.500	1.500	4.375

major dimensions G inch	P inch	B ±.01 inch	S inch	bolt# inch	mass lbs	part number
.250	.500	1.125	.156	# 6	.033	WH 4A
.250	.688	1.250	.156	# 6	.044	WH 6A
.250	.875	1.500	.188	# 8	.075	WH 8A
.313	1.000	1.875	.218	#10	.106	WH 10A
.313	1.250	2.000	.218	#10	.156	WH 12A
.375	1.500	2.500	.281	1/4	.294	WH 16A
.438	2.000	3.000	.346	5/16	.531	WH 20A
.500	2.250	3.500	.346	5/16	.725	WH 24A
.625	3.000	4.500	.406	3/8	1.400	WH 32A

1kg≒2.205lbs
1lb≒0.454kg

www.bergab.ru Берг АБ bergab@ya.ru Тел. (495)-228-06-21, факс (495) 223-3071

www.bergab.ru Берг АБ bergab@ya.ru Тел. (495)-228-06-21, факс (495) 223-3071

WA TYPE

– Shaft Support Rail –

(Inch Standard)

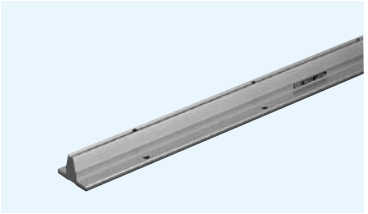

part number structure

example **WA 24-24 PD**

WA type — size — length — pre-drilled

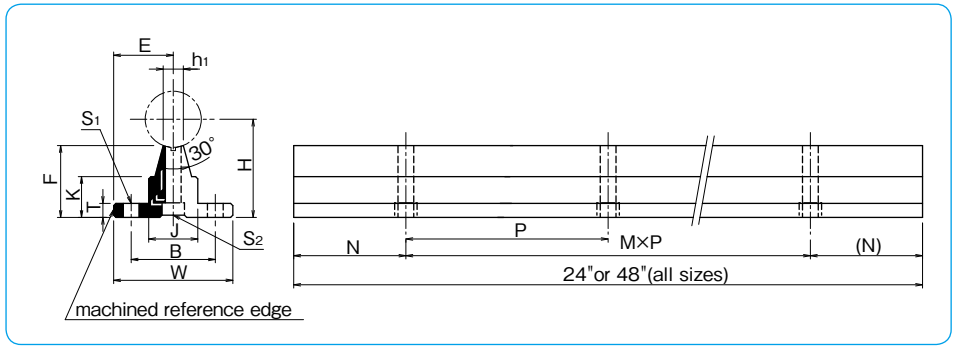

part number		shaft diameter	major dimensions H ±.001	major dimensions E ±.005	major dimensions W	major dimensions F	major dimensions T	major dimensions K	major dimensions J	major dimensions h1	mounting dimensions B ±.01	mounting dimensions N	mounting dimensions M×P	mounting dimensions S1 hole	mounting dimensions S1 bolt#	mounting dimensions S2 hole	mounting dimensions S2 bolt#	mass
		inch	inch	inch	inch	inch	inch	inch	inch	inch	inch	inch	inch	inch	inch	inch	inch	lbs
WA 8-	24PD	.5000	1.125	.7500	1.500	.903	.188	.466	.500	.255	1.000	2	5×4	.169	#6	.169	#6	1.326
	48PD												11×4					2.652
WA10-	24PD	.6250	1.125	.8125	1.625	.841	.250	.423	.500	.276	1.125	2	5×4	.193	#8	.193	#8	1.488
	48PD												11×4					2.976
WA12-	24PD	.7500	1.500	.8750	1.750	1.158	.250	.592	.625	.322	1.250	3	3×6	.221	#10	.221	#10	2.100
	48PD												7×6					4.200
WA16-	24PD	1.0000	1.750	1.0625	2.125	1.280	.250	.727	.875	.359	1.500	3	3×6	.281	1/4	.281	1/4	2.776
	48PD												7×6					5.552
WA20-	24PD	1.2500	2.125	1.2500	2.500	1.537	.313	.799	1.100	.437	1.875	3	3×6	.343	5/16	.343	5/16	4.060
	48PD												7×6					8.120
WA24-	24PD	1.5000	2.500	1.5000	3.000	1.798	.375	.922	1.375	.558	2.250	4	2×8	.343	5/16	.406	3/8	5.840
	48PD												5×8					11.680
WA32-	24PD	2.0000	3.250	1.8750	3.750	2.322	.500	1.450	1.500	.800	2.750	4	2×8	.406	3/8	.531	1/2	9.500
	48PD												5×8					19.000

All sizes are also available without pre-drilled mounting holes.
Complete shaft-rail assemblies are also available as well as custom drilling and lengths.
Please send drawings with customer specifications.

1kg≒2.205lbs
1lb≒0.454kg

LWA TYPE

– Low Shaft Support Rail –

(Inch Standard)

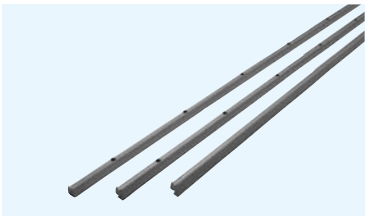

part number structure

example **LWA 24-48 PD**

LWA type — size — length — pre-drilled

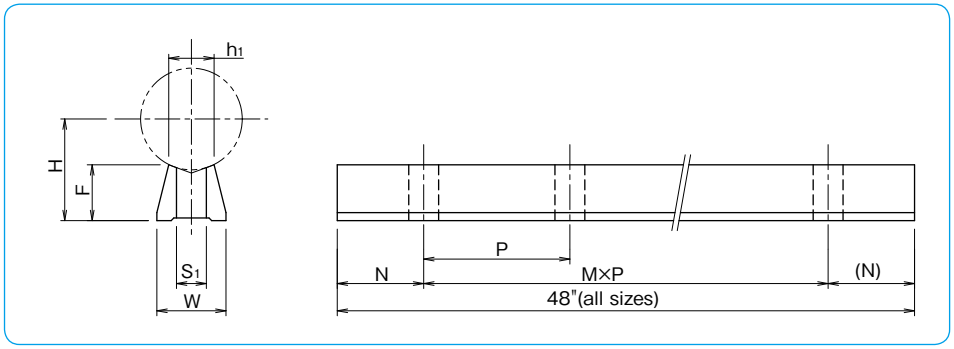

part number	shaft diameter	major dimensions H ±.002	major dimensions W	major dimensions F	major dimensions N	major dimensions M×P	major dimensions h1	major dimensions S1	mass
	inch	inch	inch	inch	inch	inch	inch	inch	lb
LWA 8-48 PD	.5000	.5625	.37	.341	2	11×4	.216	.169	0.11
LWA 10-48 PD	.6250	.6875	.45	.405	2	11×4	.269	.193	0.17
LWA 12-48 PD	.7500	.7500	.51	.409	3	7×6	.317	.224	0.20
LWA 16-48 PD	1.0000	1.0000	.69	.545	3	7×6	.422	.281	0.35
LWA 20-48 PD	1.2500	1.1875	.78	.617	3	7×6	.523	.343	0.44
LWA 24-48 PD	1.5000	1.3750	.96	.691	4	5×8	.623	.406	0.58
LWA 32-48 PD	2.0000	1.7500	1.18	.836	4	5×8	.824	.531	0.89

1kg≒2.205lbs
1lb≒0.454kg

www.bergab.ru Берг АБ bergab@ya.ru Тел. (495)-228-06-21, факс (495) 223-3071

www.bergab.ru Берг АБ bergab@ya.ru Тел. (495)-228-06-21, факс (495) 223-3071

FIT SERIES

Due to the combined tolerances of the bush's bore and the shaft's diameter, accuracy can be affected by clearance or increased dynamic friction caused by preloading.
NB's FIT Series takes advantages of the lower cost slide bush and the precision ground shaft to achieve a target clearance in order for the linear system to produce a smooth, high-accuracy performance.

part number structure

example **F– SMS25GUU ×1 / SNS25×550**

- FIT series
- slide bush part number
- number of slide bush on one shaft
- shaft part number

・Please refer to corresponding catalog pages for details.
・Please specify on the drawing about the shaft machining, radial clearance, match-marking, etc.

Recommended Radial Clearance

Depending on the type of application, the clearance range varies, please use the chart below as a guideline.

target	clearance (+) ← 0 → clearance (−)
light motion	
high accuracy	
no play	

Slide Bush, Radial Clearance (−) , Negative Limit

Negative clearance is opted to reduce backlash. Please refer to the chart below for the negative clearance limits.

size	3~8	10~13	16~25	30~35	40	50~60
radial clearance limit	−3μm	−4μm	−6μm	−8μm	−10μm	−13μm

・The off-center of the housing causes uneven loading on the slide bush, please pay special attention to the centering of the housing especially when negative clearance is a requirement.
・Please contact NB for details on the extra preloading requirement or on other part numbers like SRE, SR, etc.

RANGE AND SPECIFICATIONS OF MACHINING

NB does shaft-machining based on the customer requirements.

Machining・Grinding

Shafts can be machined and ground up to a diameter of 400mm and a length of 6000mm.

Internal Surface Grinding

The straight/tapered portion of the inner spindle can be ground.

Deep Hole Machining

Non-standard holes can be machined using a gun drill and BT machining methods. (refer to Table F-6)

Table F-6 Deep Hole Machining Range

	hole diameter (mm)	maximum length (mm)
gun drill machining	φ2 ~	850 (single-side machining)
BT machining	φ30 ~	2000 (single-side machining)

Please contact NB for the maximum length versus the hole diameter. Machining is possible up to twice the maximum length listed above for double-side machining.

Thread Grinding

Triangular and trapezoidal threading can be handled.

Compatible Parts

Special nuts compatible with a given shaft can be machined. The inner surface and outer diameter of the tapered portion can be ground.

Material and Heat Treatment

NB's non-standard material and non-standard shaped parts can be heat treated. Please specify the heat treatment method, hardness, and heat-treated area.

Gun Drill Machining

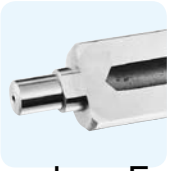

EXAMPLES OF MACHINING

THERMAL-SPRAYING CERAMIC-COATING SPECIFICATIONS

ADVANTAGES

Parts that require wear and corrosion resistance can be thermal-sprayed with a ceramic material per NB's ceramic-coating specifications. Ceramic-coating can be applied to a wide variety of materials. The pores in the coated layer result in good lubrication characteristics and can be sealed to achieve high corrosion resistance.

APPLICATION EXAMPLE

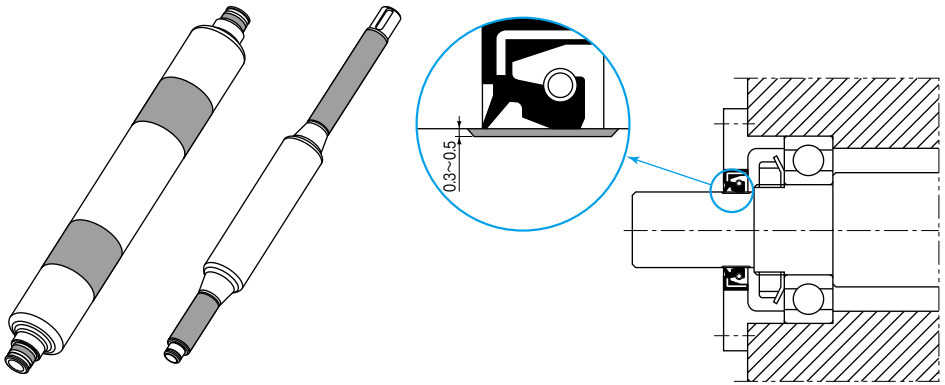

Application of a ceramic coating to oil-sealing parts, rollers, and roll shafts results in good lubrication and high wear/corrosion resistance characteristics.
Note: Ceramic coated surface cannot be used as the inner race for a slide bush.

REFERENCE

Standard Coating Materials

High-carbon chromium bearing steel (SUJ2)	Martensite stainless steel (equivalent to SUS440C)
Chrome molybdenum steel (SCM415, 435)	Austenite stainless steel (SUS303, 304)
Carbon steel for machinery (S45C)	Steel alloy for tools (SKS3, SK4)

Proper heat treatment can be done on your request. Thermal-spraying ceramic-coating is applicable to other materials as well.

Standard Ceramic for Thermal-Spraying

main component	specific gravity	hardness	characteristics
TiO_2 titanium dioxide	4.7	58HRC	max. temp. 540℃ color: black wear resistant fine coating fine surface finish

thermal-spraying layer thickness: 0.3-0.5mm
Other types of ceramic materials can be thermal-sprayed. Contact NB for more information.

Example of Ceramic Coating

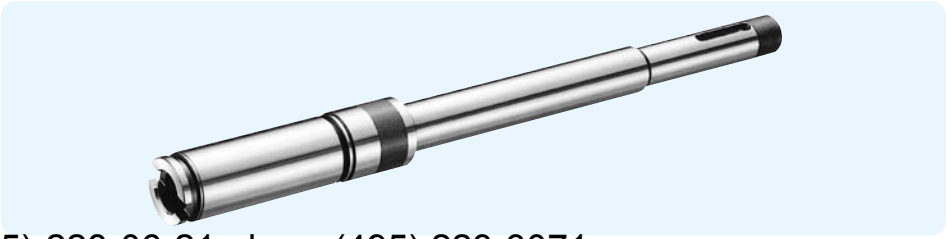

www.bergab.ru Берг АБ bergab@ya.ru Тел. (495)-228-06-21, факс (495) 223-3071

www.bergab.ru Берг АБ bergab@ya.ru Тел. (495)-228-06-21, факс (495) 223-3071

EXAMPLES OF MACHINING

Main Spindle

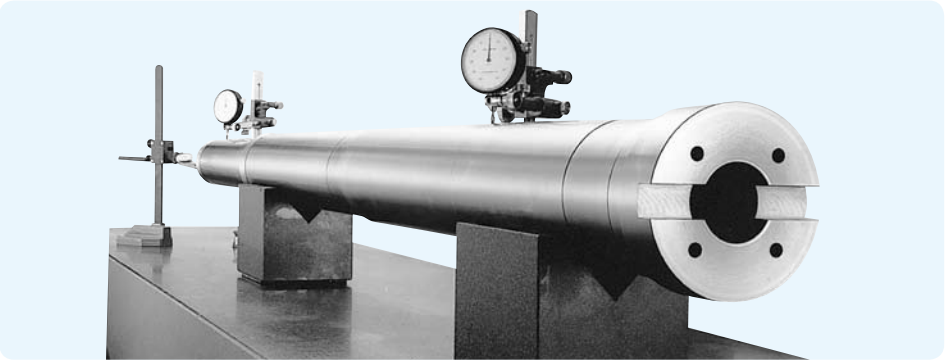

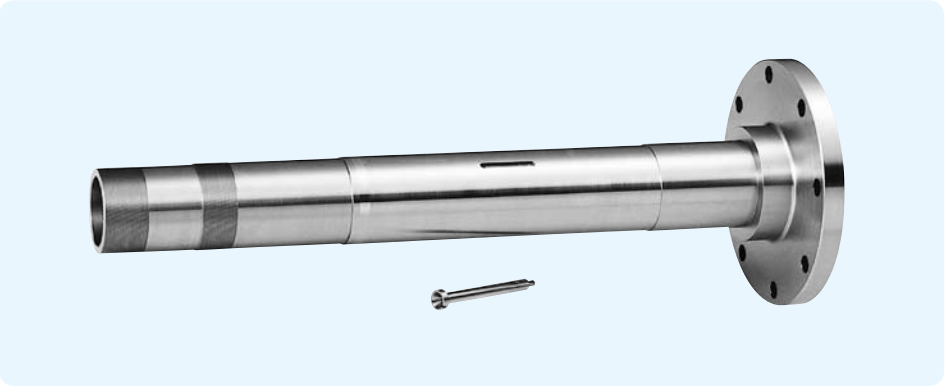

EXAMPLES OF MACHINING

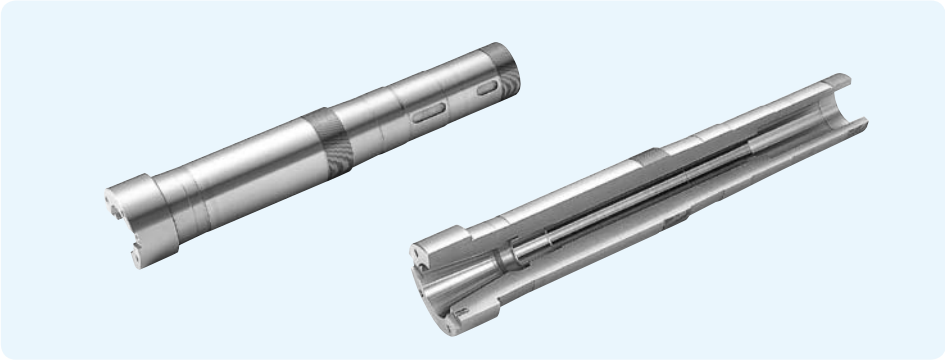

Roll Shaft

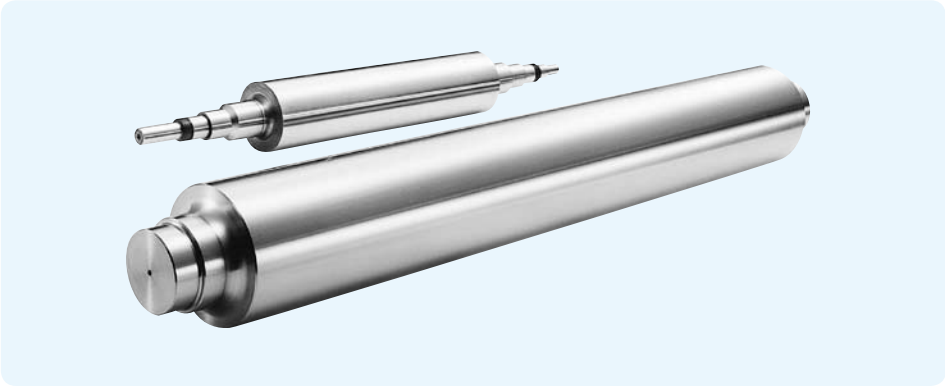

Quill Shaft

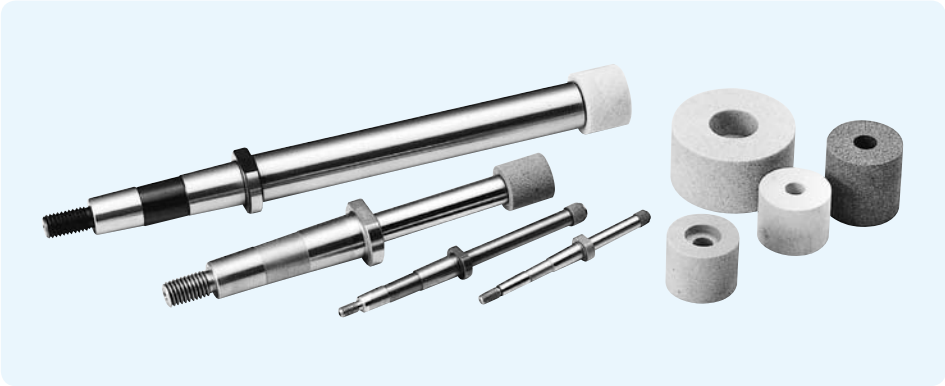

Please send drawings with customer specifications.

www.bergab.ru Берг АБ bergab@ya.ru Тел. (495)-228-06-21, факс (495) 223-3071

www.bergab.ru Берг АБ bergab@ya.ru Тел. (495)-228-06-21, факс (495) 223-3071

EXAMPLES OF MACHINING

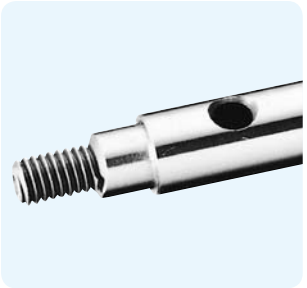
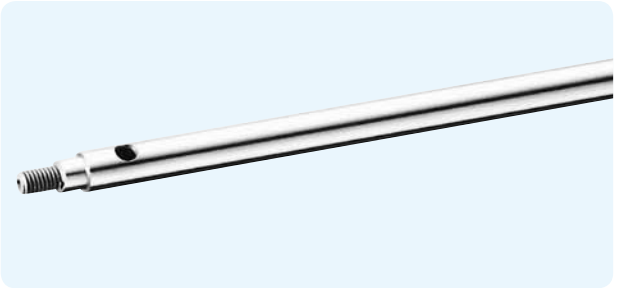
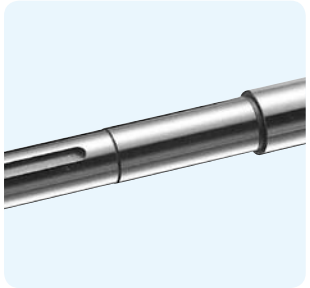
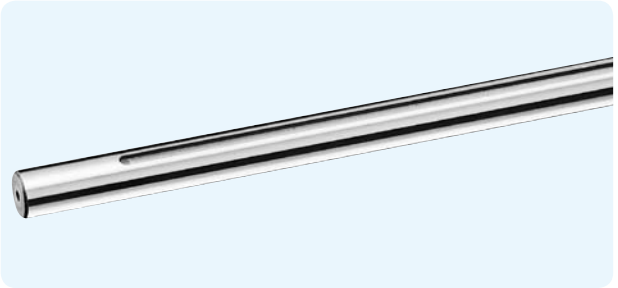
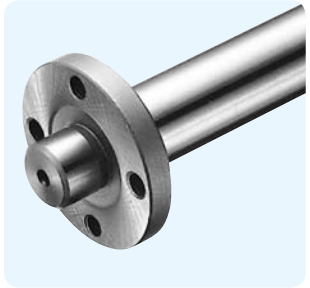
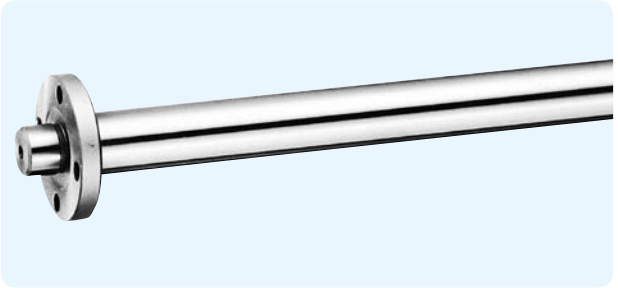
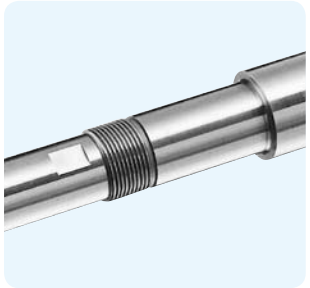
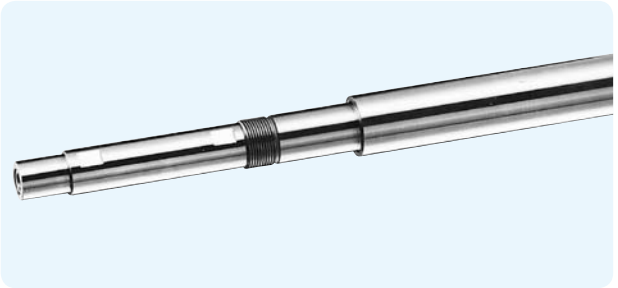

EXAMPLES OF MACHINING

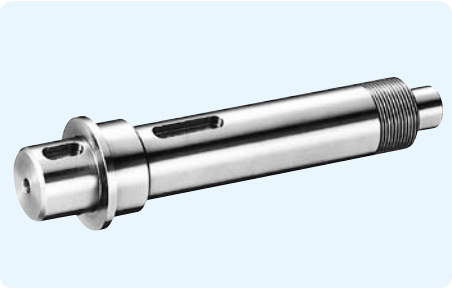
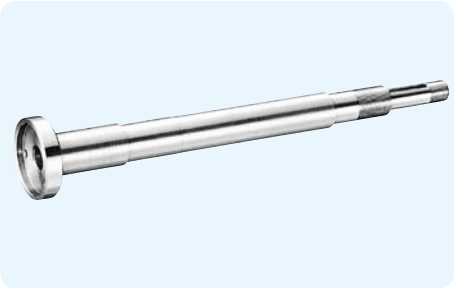
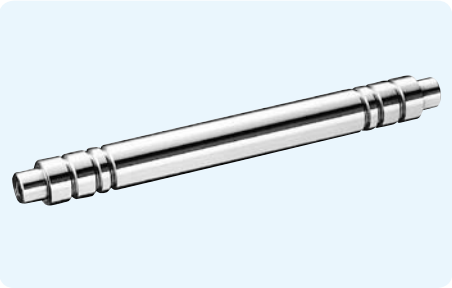
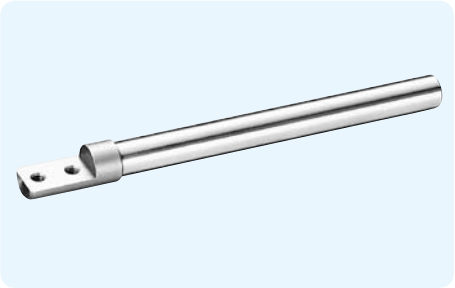
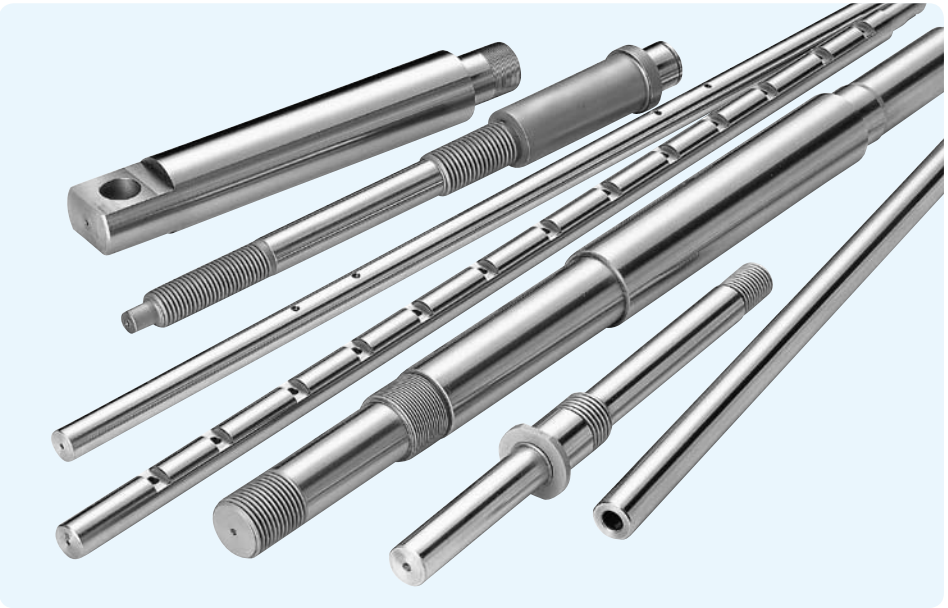

Please send drawings with customer specifications.

www.bergab.ru Берг АБ bergab@ya.ru Тел. (495)-228-06-21, факс (495) 223-3071

www.bergab.ru Берг АБ bergab@ya.ru Тел. (495)-228-06-21, факс (495) 223-3071

SN TYPE

– NB Shaft –

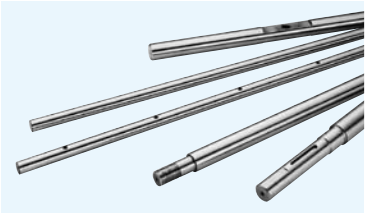

part number structure

example **SN 25 h5 × 576**

- SN type
- outer diameter (D)
- outer diameter tolerance g6 when blank
- length (L)

straight

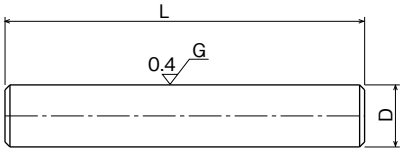

machined (example)

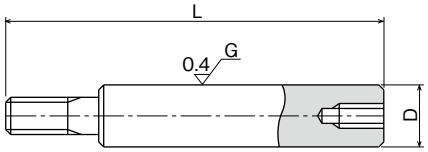

part number	outer diameter D mm	tolerance g6 μm	length L mm	mass Kg/m
SN 3	3	−2/−8	50 ↔ 400	0.06
SN 4	4	− 4 −12	100 ↔ 500	0.10
SN 5	5		100 ↔ 700	0.16
SN 6	6		100 ↔ 1000	0.23
SN 8	8	− 5 −14	200 ↔ 1500	0.40
SN 10	10		200 ↔ 2000	0.62
SN 12	12	− 6 −17	200 ↔ 3000	0.89
SN 13	13		200 ↔ 3000	1.04
SN 15	15		300 ↔ 4000	1.39
SN 16	16		300 ↔ 4000	1.58
SN 20	20	− 7 −20	300 ↔ 5000	2.47
SN 25	25		300 ↔ 6000	3.85
SN 30	30		300 ↔ 6000	5.55
SN 35	35	− 9 −25	400 ↔ 6000	7.55
SN 40	40		400 ↔ 6000	9.87
SN 50	50		500 ↔ 6000	15.4
SN 60	60	−10	600 ↔ 6000	22.2
SN 80	80	−29	800 ↔ 6000	39.5
SN100	100	−12	1000 ↔ 6000	61.7
SN120	120	−34	1500 ↔ 4500	88.8
SN150	150	−14/−39	1500 ↔ 4500	139

material: high-carbon chromium bearing steel (SUJ2) hardness: 60HRC (HV697) or more
Tolerances other than g6 are available upon request.

SNS TYPE

– NB Stainless Steel Shaft –

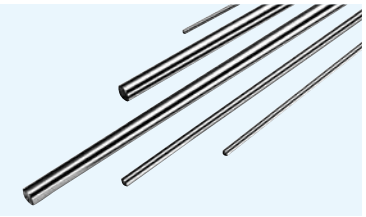

part number structure

example **SNS 25 h5 × 576**

- SNS type
- outer diameter (D)
- outer diameter tolerance g6 when blank
- length (L)

straight

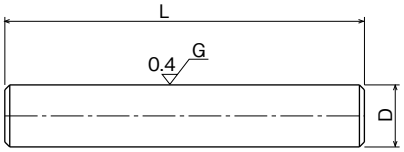

machined (example)

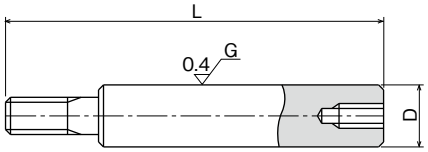

part number	outer diameter D mm	tolerance g6 μm	length L mm	mass Kg/m
SNS 3	3	−2/−8	50 ↔ 300	0.06
SNS 4	4	− 4 −12	100 ↔ 400	0.10
SNS 5	5		100 ↔ 500	0.16
SNS 6	6		100 ↔ 600	0.22
SNS 8	8	− 5 −14	200 ↔ 1000	0.39
SNS 10	10		200 ↔ 1500	0.61
SNS 12	12	− 6 −17	200 ↔ 2500	0.88
SNS 13	13		200 ↔ 3000	1.03
SNS 16	16		300 ↔ 4000	1.56
SNS 20	20	− 7 −20	300 ↔ 5000	2.43
SNS 25	25		300 ↔ 6000	3.80
SNS 30	30		300 ↔ 6000	5.48
SNS 35	35	− 9 −25	400 ↔ 6000	7.23
SNS 40	40		400 ↔ 6000	9.44
SNS 50	50		500 ↔ 6000	15.2
SNS 60	60	−10	600 ↔ 6000	21.9
SNS 80	80	−29	800 ↔ 6000	39.0
SNS100	100	−12/−34	1000 ↔ 6000	60.9

material: martensite stainless steel (equivalent to SUS440C)
hardness: 56HRC (HV613) or more
The maximum length of hardening is up to 4500mm for shafts with diameter over 80mm.
Tolerances other than g6 are available upon request.

www.bergab.ru Берг АБ bergab@ya.ru Тел. (495)-228-06-21, факс (495) 223-3071

www.bergab.ru Берг АБ bergab@ya.ru Тел. (495)-228-06-21, факс (495) 223-3071

SNW TYPE

– NB Inch Shaft –

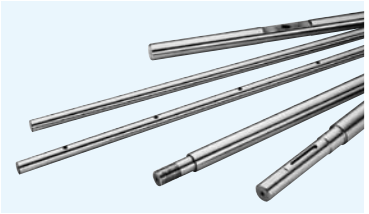

part number structure

example **SNW 24 h5 × 4000**

- SNW type
- size
- outer diameter tolerance: g6 when blank
- length (L)

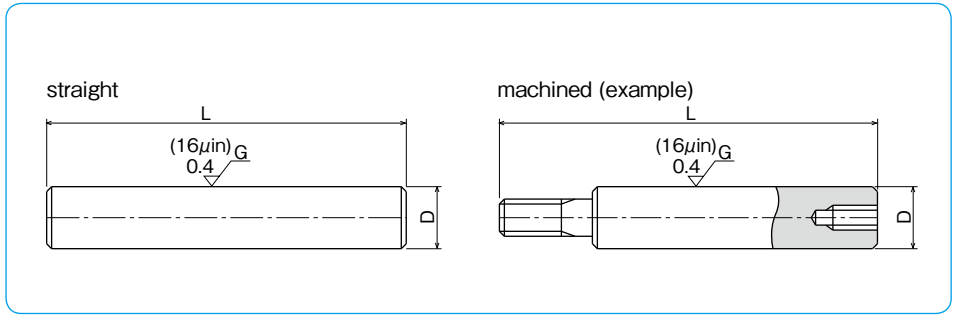

part number	outer diameter D inch / mm	tolerance g6 inch / μm	length L inch / mm	mass lbs/inch / Kg/m
SNW 4	1/4 / 6.350	−.0002 / −.0006	3.94 / 100 ↔ 39.37 / 1000	0.014 / 0.25
SNW 6	3/8 / 9.525	−5 / −14	7.84 / 200 ↔ 59.06 / 1500	0.031 / 0.56
SNW 8	1/2 / 12.700	−.0002 / −.0007	7.84 / 200 ↔ 118.11 / 3000	0.056 / 0.99
SNW10	5/8 / 15.875	−6 / −17	7.84 / 200 ↔ 157.48 / 4000	0.086 / 1.55
SNW12	3/4 / 19.050	−.0003 / −.0008	11.81 / 300 ↔ 157.48 / 4000	0.125 / 2.24
SNW16	1 / 25.400	−7 / −20	11.81 / 300 ↔ 157.48 / 4000	0.222 / 3.98
SNW20	1-1/4 / 31.750	−.0004 / −.0010	11.81 / 300 ↔ 157.48 / 4000	0.420 / 6.22
SNW24	1-1/2 / 38.100	−9 / −25	15.75 / 400 ↔ 157.48 / 4000	0.500 / 8.95
SNW32	2 / 50.800	−.0004 / −.0011	19.69 / 500 ↔ 157.48 / 4000	0.890 / 15.91
SNW40	2-1/2 / 63.500	−10 / −29	23.62 / 600 ↔ 157.48 / 4000	1.391 / 25.00
SNW48	3 / 76.200		23.62 / 600 ↔ 157.48 / 4000	2.003 / 37.92
SNW64	4 / 101.600	−.0005/−.0013 / −12/−34	39.37 / 1000 ↔ 157.48 / 4000	3.560 / 64.02

material: high-carbon chromium bearing steel (SUJ2)
hardness: 60HRC (HV697) or more
Tolerances other than g6 are available upon request.

1kg≒2.205lbs

SNWS TYPE

– NB Inch Stainless Steel Shaft –

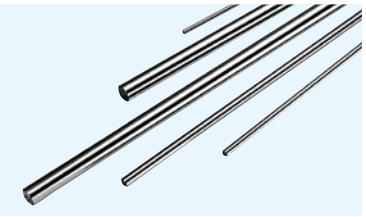

part number structure

example **SNWS 24 h5 × 4000**

- SNWS type
- size
- outer diameter tolerance: g6 when blank
- length (L)

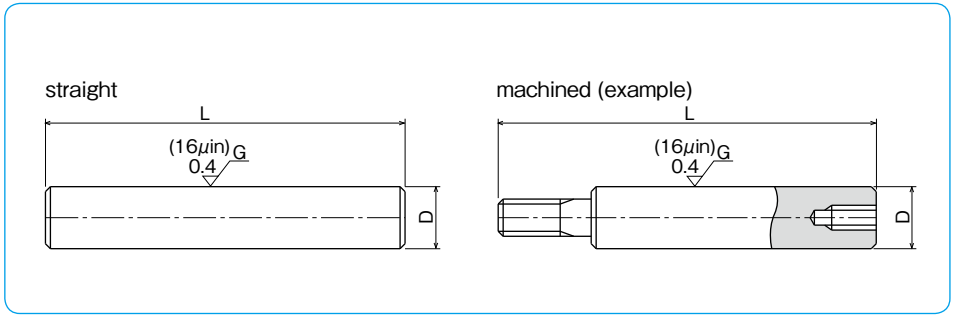

part number	outer diameter D inch / mm	tolerance g6 inch / μm	length L inch / mm	mass lbs/inch / Kg/m
SNWS 4	1/4 / 6.350	−.0002 / −.0006	3.94 / 100 ↔ 23.62 / 600	0.014 / 0.25
SNWS 6	3/8 / 9.525	−5 / −14	7.84 / 200 ↔ 39.37 / 1000	0.031 / 0.55
SNWS 8	1/2 / 12.700	−.0002 / −.0007	7.84 / 200 ↔ 98.43 / 2500	0.056 / 0.98
SNWS10	5/8 / 15.875	−6 / −17	7.84 / 200 ↔ 118.11 / 3000	0.086 / 1.54
SNWS12	3/4 / 19.050	−.0003 / −.0008	11.81 / 300 ↔ 157.48 / 4000	0.125 / 2.22
SNWS16	1 / 25.400	−7 / −20	11.81 / 300 ↔ 157.48 / 4000	0.222 / 3.95
SNWS20	1-1/4 / 31.750	−.0004 / −.0010	11.81 / 300 ↔ 157.48 / 4000	0.420 / 6.16
SNWS24	1-1/2 / 38.100	−9 / −25	15.75 / 400 ↔ 157.48 / 4000	0.500 / 8.88
SNWS32	2 / 50.800	−.0004/−.0011 / −10/−29	19.69 / 500 ↔ 157.48 / 4000	0.890 / 15.78

material: martensite stainless steel (equivalent to SUS440C)
hardness: 56HRC (HV613) or more
Tolerances other than g6 are available upon request.

1kg≒2.205lbs

www.bergab.ru Берг АБ bergab@ya.ru Тел. (495)-228-06-21, факс (495) 223-3071

www.bergab.ru Берг АБ bergab@ya.ru Тел. (495)-228-06-21, факс (495) 223-3071

SNT TYPE

– NB Hollow Shaft –

part number structure

example **SNT 25 h5 × 576**

- SNT type
- outer diameter (D)
- outer diameter tolerance g6 when blank
- length (L)

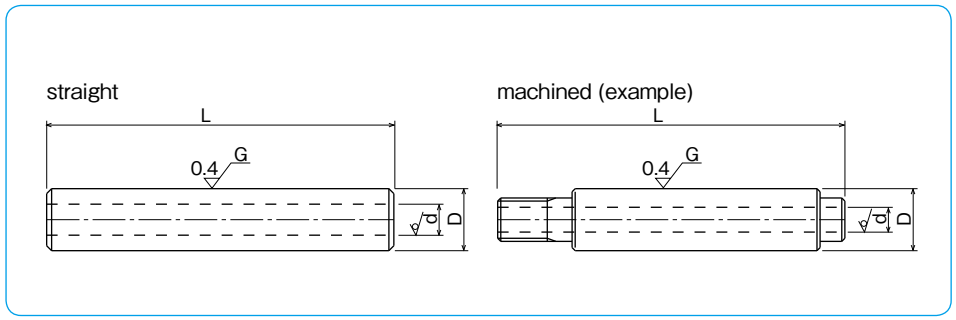

part number	outer diameter D mm	tolerance g6 μm	inner diameter d mm	length L mm	mass Kg/m
SNT 6	6	−4/−12	2	100 ↔ 400	0.20
SNT 8	8	−5 −14	3	200 ↔ 600	0.34
SNT 10	10		4	200 ↔ 1000	0.52
SNT 12	12	−6 −17	5	200 ↔ 1500	0.73
SNT 13	13		6	200 ↔ 1500	0.82
SNT 16	16		8	300 ↔ 2500	1.18
SNT 20	20	−7 −20	10	300 ↔ 4000	1.85
SNT 25	25		15	300 ↔ 4000	2.46
SNT 30	30		16	300 ↔ 4500	3.97
SNT 35	35	−9 −25	19	400 ↔ 4500	5.32
SNT 40	40		20	400 ↔ 4500	7.39
SNT 50	50		26	500 ↔ 4500	11.3
SNT 60	60	−10 −29	32	600 ↔ 4500	15.9
SNT 80	80		48	800 ↔ 4500	25.3
SNT100	100	−12/−34	60	1000 ↔ 4500	39.5

material: high-carbon chromium bearing steel (SUJ2)
hardness: 60HRC (HV697) or more
Tolerances other than g6 are available upon request.

NB CENTER-LINED TAPPED SHAFT

A larger diameter shaft can overcome problems in maintaining precision functionality when a high or unbalanced load is applied. A combination of the center-lined tapped shaft together with the SA type support rail is ideal in such cases. (see pages F-18,19) The center-lined tapped shaft is standardized to simplify shaft selection.

part number structure

example **SNSB 25 × 576**

- material
  SNB: SUJ2
  SNSB: equivalent to SUS440C
- outer diameter (D) g6 when blank
- length (L)

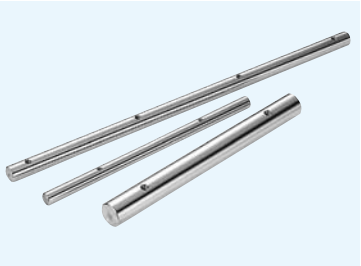

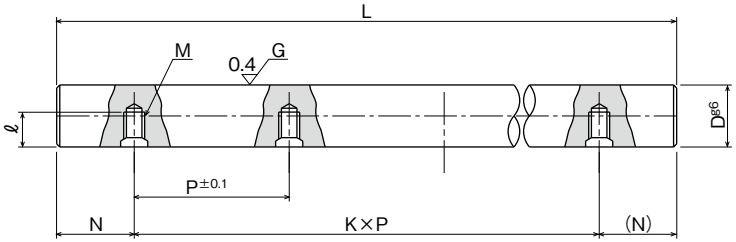

$N: \frac{L-K\times P}{2}$

K: number of pitches

NB Center-Lined Tapped Shaft

part number	outer diameter D mm	tolerance g6* μm	pitch P mm	screw size M	tap depth ℓ mm	maximum length Lmax mm
SNB10	10	−5/−14	100	M4	4.5	1,500
SNB12	12	−6 −17	100	M4	5.5	1,800
SNB13	13		100	M4	6	2,000
SNB16	16		150	M5	7	2,000
SNB20	20	−7 −20	150	M6	9	3,000
SNB25	25		200	M6	12	4,000
SNB30	30		200	M8	15	4,500
SNB35	35	−9 −25	200	M8	15	5,000
SNB40	40		300	M8	18	6,000
SNB50	50		300	M10	22	6,000

material: high-carbon chromium bearing steel (SUJ2)
hardness: 60HRC (HV697) or more
*g6 is a standard tolerance of the outer diameter.

NB Center-Lined Tapped Stainless Steel Shaft

part number	outer diameter D mm	tolerance g6* μm	pitch P mm	screw size M	tap depth ℓ mm	maximum length Lmax mm
SNSB16	16	−6/−17	150	M5	7	2,000
SNSB20	20	−7 −20	150	M6	9	3,000
SNSB25	25		200	M6	12	4,000
SNSB30	30		200	M8	15	4,500
SNSB35	35	−9 −25	200	M8	15	5,000
SNSB40	40		300	M8	18	6,000
SNSB50	50		300	M10	22	6,000

material: martensite stainless steel (equivalent to SUS440C)
hardness: 56HRC (HV613) or more
*g6 is a standard tolerance of the outer diameter.

www.bergab.ru Берг АБ bergab@ya.ru Тел. (495)-228-06-21, факс (495) 223-3071

www.bergab.ru Берг АБ bergab@ya.ru Тел. (495)-228-06-21, факс (495) 223-3071

SNT TYPE

– NB Hollow Shaft –

part number structure

example **SNT 25 h5 × 576**

- SNT type
- outer diameter (D)
- outer diameter tolerance g6 when blank
- length (L)

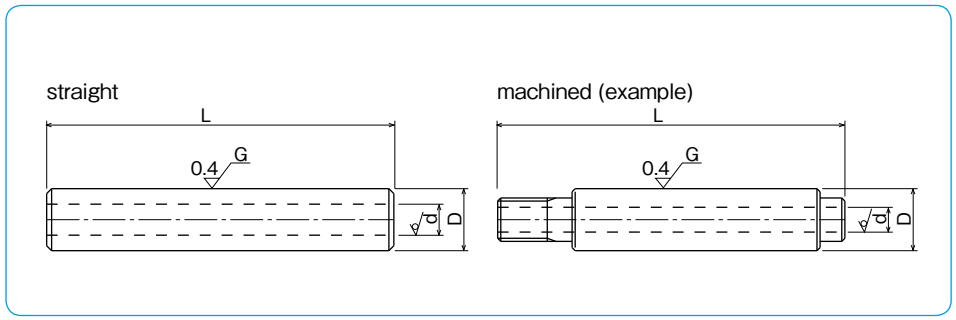

part number	outer diameter D mm	tolerance g6 μm	inner diameter d mm	length L mm	mass Kg/m
SNT 6	6	−4/−12	2	100 ↔ 400	0.20
SNT 8	8	−5 −14	3	200 ↔ 600	0.34
SNT 10	10		4	200 ↔ 1000	0.52
SNT 12	12	−6 −17	5	200 ↔ 1500	0.73
SNT 13	13		6	200 ↔ 1500	0.82
SNT 16	16		8	300 ↔ 2500	1.18
SNT 20	20	−7 −20	10	300 ↔ 4000	1.85
SNT 25	25		15	300 ↔ 4000	2.46
SNT 30	30		16	300 ↔ 4500	3.97
SNT 35	35	−9 −25	19	400 ↔ 4500	5.32
SNT 40	40		20	400 ↔ 4500	7.39
SNT 50	50		26	500 ↔ 4500	11.3
SNT 60	60	−10 −29	32	600 ↔ 4500	15.9
SNT 80	80		48	800 ↔ 4500	25.3
SNT100	100	−12/−34	60	1000 ↔ 4500	39.5

material: high-carbon chromium bearing steel (SUJ2)
hardness: 60HRC (HV697) or more
Tolerances other than g6 are available upon request.

NB CENTER-LINED TAPPED SHAFT

A larger diameter shaft can overcome problems in maintaining precision functionality when a high or unbalanced load is applied. A combination of the center-lined tapped shaft together with the SA type support rail is ideal in such cases. (see pages F-18,19) The center-lined tapped shaft is standardized to simplify shaft selection.

part number structure

example **SNSB 25 × 576**

- material
  SNB: SUJ2
  SNSB: equivalent to SUS440C
- outer diameter (D) g6 when blank
- length (L)

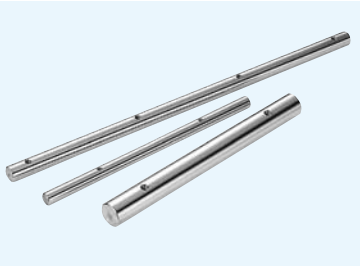

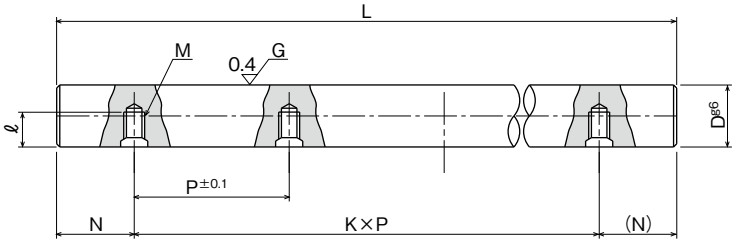

$N: \frac{L-K\times P}{2}$

K: number of pitches

NB Center-Lined Tapped Shaft

part number	outer diameter D mm	tolerance g6* μm	pitch P mm	screw size M	tap depth ℓ mm	maximum length Lmax mm
SNB10	10	−5/−14	100	M4	4.5	1,500
SNB12	12	−6 −17	100	M4	5.5	1,800
SNB13	13		100	M4	6	2,000
SNB16	16		150	M5	7	2,000
SNB20	20	−7 −20	150	M6	9	3,000
SNB25	25		200	M6	12	4,000
SNB30	30		200	M8	15	4,500
SNB35	35	−9 −25	200	M8	15	5,000
SNB40	40		300	M8	18	6,000
SNB50	50		300	M10	22	6,000

material: high-carbon chromium bearing steel (SUJ2)
hardness: 60HRC (HV697) or more
*g6 is a standard tolerance of the outer diameter.

NB Center-Lined Tapped Stainless Steel Shaft

part number	outer diameter D mm	tolerance g6* μm	pitch P mm	screw size M	tap depth ℓ mm	maximum length Lmax mm
SNSB16	16	−6/−17	150	M5	7	2,000
SNSB20	20	−7 −20	150	M6	9	3,000
SNSB25	25		200	M6	12	4,000
SNSB30	30		200	M8	15	4,500
SNSB35	35	−9 −25	200	M8	15	5,000
SNSB40	40		300	M8	18	6,000
SNSB50	50		300	M10	22	6,000

material: martensite stainless steel (equivalent to SUS440C)
hardness: 56HRC (HV613) or more
*g6 is a standard tolerance of the outer diameter.

www.bergab.ru Берг АБ bergab@ya.ru Тел. (495)-228-06-21, факс (495) 223-3071

www.bergab.ru Берг АБ bergab@ya.ru Тел. (495)-228-06-21, факс (495) 223-3071

SNW-PD

– NB Inch Pre-Drilled Shaft –

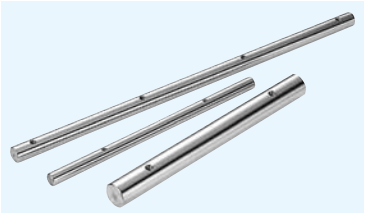

part number structure

example **SNW 24 h5 × 72 - PD**

- SNW type
- size
- outer diameter tolerance g6 when blank
- length (L in inches)
- pre-drilled shaft

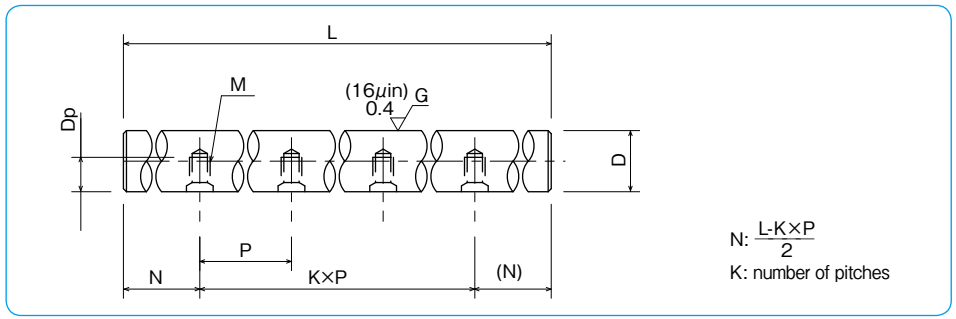

$N: \frac{L-K\times P}{2}$

K: number of pitches

part number	outer diameter D inch / mm	tolerance g6* inch/μm	pitch P inch/mm	bolt size M	tapped hole depth Dp inch/mm	maximum length L inch/mm
SNW 8-PD	1/2 12.700	−.0002 −.0007	4 101.6	# 6-32	0.280 7.1	72 1,828.8
SNW10-PD	5/8 15.875	−6 −17		# 8-32	0.350 8.9	
SNW12-PD	3/4 19.050	−.0003 −.0008	6 152.4	# 10-32	0.400 10.2	
SNW16-PD	1 25.400	−7 −20		1/4-20	0.500 12.7	
SNW20-PD	1-1/4 31.750	−.0004 −.0010		5/16-18	0.650 16.5	
SNW24-PD	1/1/2 38.100	−9 −25		3/8-16	0.700 17.8	
SNW32-PD	2 50.800	−.0004/−.0011 −10/−29	8 203.2	1/2-13	0.850 21.6	

material: high-carbon chromium bearing steel (SUJ2)
hardness: 60HRC (HV697) or more
Tolerances other than *g6 are available upon request.
Longer lengths are also available.

1kg≒2.205lbs

SNWS-PD

– NB Inch Pre-Drilled Stainless Steel Shaft –

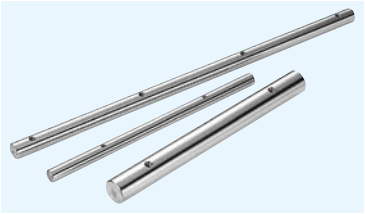

part number structure

example **SNWS 24 h5 × 72 - PD**

- SNWS type
- size
- outer diameter tolerance g6 when blank
- length (L in inches)
- pre-drilled shaft

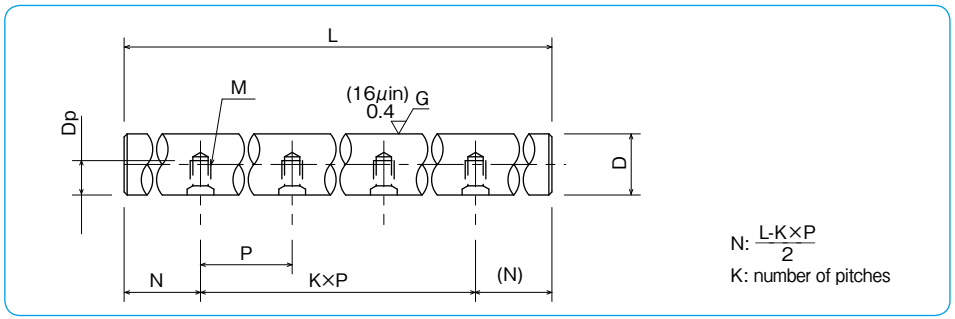

$N: \frac{L-K\times P}{2}$

K: number of pitches

part number	outer diameter D inch / mm	tolerance g6* inch/μm	pitch P inch/mm	bolt size M	tapped hole depth Dp inch/mm	maximum length L inch/mm
SNWS12-PD	3/4 19.050	−.0003 −.0008	6 152.4	#10−32	0.400 10.2	72 1,828.8
SNWS16-PD	1 25.400	−7 −20		1/4−20	0.500 12.7	
SNWS20-PD	1-1/4 31.750	−.0004 −.0010		5/16−18	0.650 16.5	
SNWS24-PD	1-1/2 38.100	−9 −25	8 203.2	3/8−16	0.700 17.8	
SNWS32-PD	2 50.800	−.0004/−.0011 −10/−29		1/2−13	0.850 21.6	

material: martensite stainless steel (equivalent to SUS440C)
hardness: 56HRC (HV613) or more
Tolerances other than *g6 are available upon request.
Longer lengths are also available.

www.bergab.ru Берг АБ bergab@ya.ru Тел. (495)-228-06-21, факс (495) 223-3071

www.bergab.ru Берг АБ bergab@ya.ru Тел. (495)-228-06-21, факс (495) 223-3071

SHAFT SUPPORTER AND SHAFT SUPPORT RAIL

These components save design/assembling time and ease shaft installation.

SH・SH-A・WH-A type

These are most commonly used compact shaft supporters. SH type is made of cast iron and SH-A/WH-A type is made of aluminum alloy.

SHF・SHF-FC type

These are flanged type shaft supporters for a compact design. SHF is made of aluminum alloy and SHF-FC (shaft diameter 35 and over) is made of cast iron.

SA・WA・LWA type (shaft support rail)

These support rails support shafts from below to avoid shaft deflection for a long-stroke/high load application. This type is made of aluminum alloy.

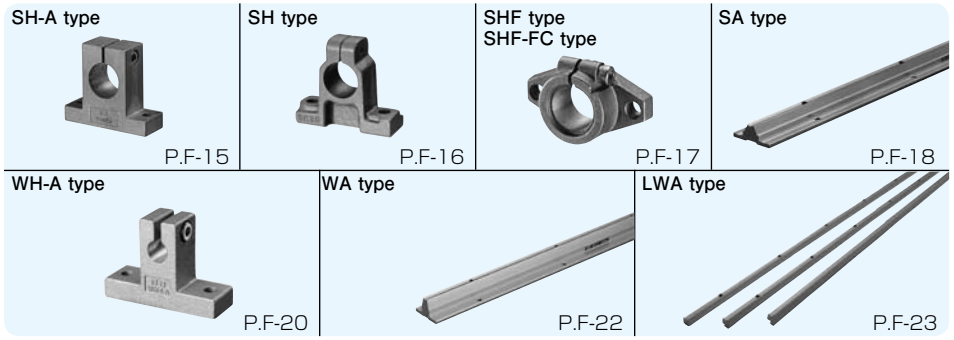

ACCURACY

The accuracy of the SA support rails are measured as shown in Figure F-2.

Figure F-2 Measurement Method

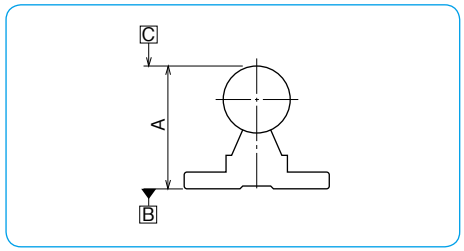

Figure F-3 Accuracy of SA type Support Rail

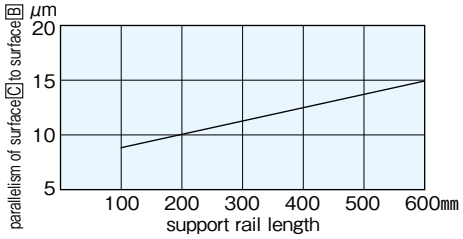

SH-A TYPE

– Shaft Supporter –

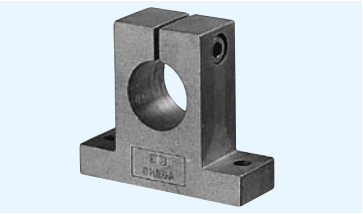

part number structure

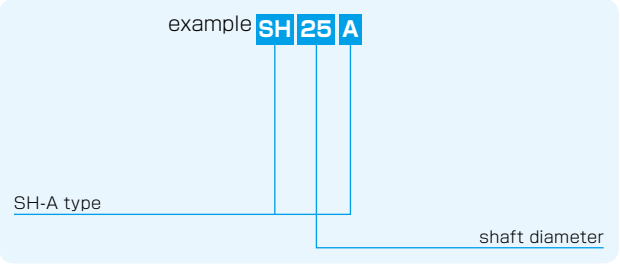

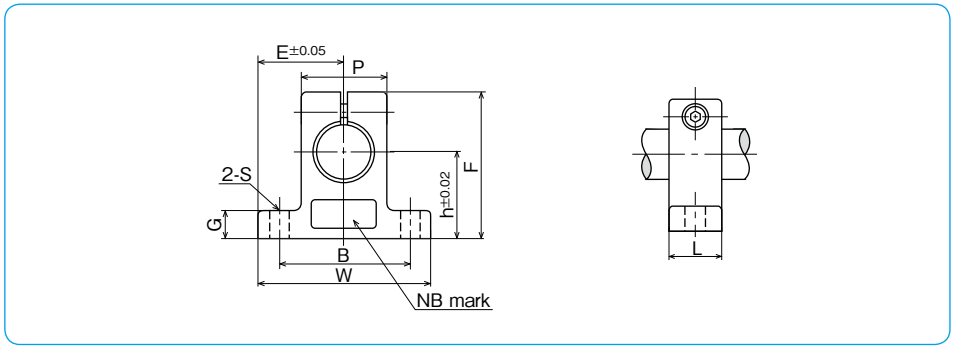

part number	shaft diameter mm	major dimensions h mm	E mm	W mm	L mm	F mm	G mm	P mm	B mm	S mm	tightening screw size	recommended torque N・m	mass g
SH 8A	8	20	21	42	14	32.8	6	18	32	5.5 (M5)	M4	2	24
SH10A	10	20	21	42	14	32.8	6	18	32	5.5 (M5)	M4	2	24
SH12A	12	23	21	42	14	37.5	6	20	32	5.5 (M5)	M4	2	30
SH13A	13	23	21	42	14	37.5	6	20	32	5.5 (M5)	M4	2	30
SH16A	16	27	24	48	16	44	8	25	38	5.5 (M5)	M4	2	40
SH20A	20	31	30	60	20	51	10	30	45	6.6 (M6)	M5	3	70
SH25A	25	35	35	70	24	60	12	38	56	6.6 (M6)	M6	5.5	130
SH30A	30	42	42	84	28	70	12	44	64	9 (M8)	M6	5.5	180
SH35A	35	50	49	98	32	82	15	50	74	11 (M10)	M8	13.5	270
SH40A	40	60	57	114	36	96	15	60	90	11 (M10)	M8	13.5	420
SH50A	50	70	63	126	40	120	18	74	100	14 (M12)	M12	29	750
SH60A	60	80	74	148	45	136	18	90	120	14 (M12)	M12	29	1,100

www.bergab.ru Берг АБ bergab@ya.ru Тел. (495)-228-06-21, факс (495) 223-3071

www.bergab.ru Берг АБ bergab@ya.ru Тел. (495)-228-06-21, факс (495) 223-3071

SH TYPE

– Shaft Supporter –

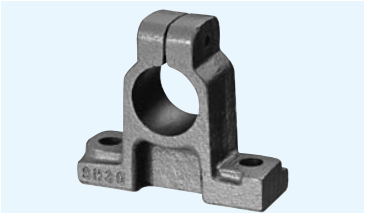

part number structure

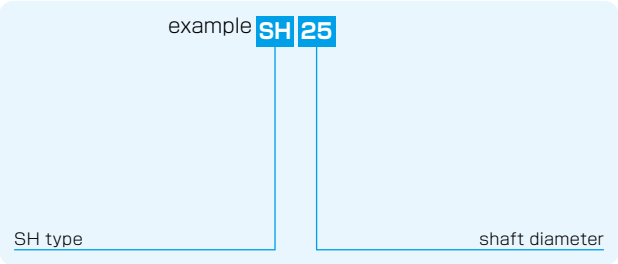

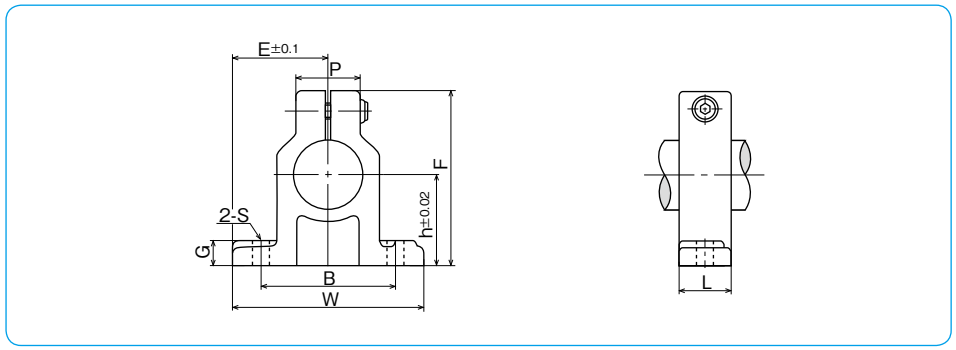

part number	shaft diameter	major dimensions									tightening screw		mass
		h	E	W	L	F	G	P	B	S	size	recommended torque	
	mm	mm	mm	mm	mm	mm	mm	mm	mm	mm		N・m	g
SH10	10	20	22	44	15	35	7	19	32	4.5 (M4)	M4	2	80
SH13	13	23	25	50	17	40	8	17	32	7 (M5)	M4	2	120
SH16	16	27	27.5	55	17	45	10	16	38	7 (M5)	M4	2	120
SH20	20	31	32.5	65	20	53	12	22	45	8 (M6)	M5	3	190
SH25	25	35	38	76	24	61	12	24	56	8 (M6)	M6	5.5	300
SH30	30	42	42.5	85	28	73	15	28	64	10 (M8)	M6	5.5	490
SH35	35	50	50	100	32	87	15	34	74	12 (M10)	M8	13.5	690
SH40	40	60	60	120	36	104	18	38	90	12 (M10)	M10	29	1,200
SH50	50	70	70	140	40	122	20	48	100	14 (M12)	M12	29	1,700
SH60	60	80	82.5	165	45	140	23	58	120	14 (M12)	M12	29	2,500

SHF TYPE

– Shaft Supporter Flange Type –

part number structure

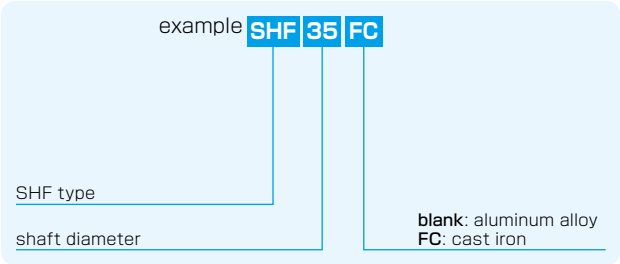

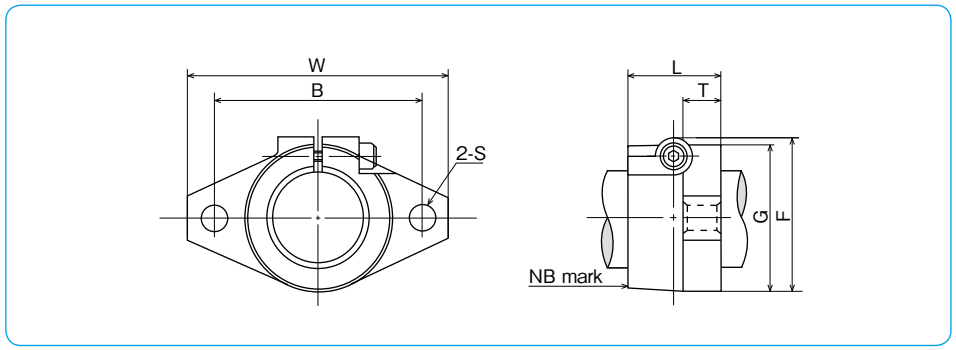

part number		shaft diameter	major dimensions							tightening screw		mass	
			W	L	T	F	G	B	S	size	recommended torque	g	
aluminum alloy	cast iron	mm	mm	mm	mm	mm	mm	mm	mm		N・m	aluminum alloy	cast iron
SHF10	–	10	43	10	5	24	20	32	5.5 (M5)	M4	2	13	–
SHF12	–	12	47	13	7	28	25	36	5.5 (M5)	M4	2	20	–
SHF13	–	13	47	13	7	28	25	36	5.5 (M5)	M4	2	20	–
SHF16	–	16	50	16	8	31	28	40	5.5 (M5)	M4	2	27	–
SHF20	–	20	60	20	8	37	34	48	7 (M6)	M5	3	40	–
SHF25	–	25	70	25	10	42	40	56	7 (M6)	M5	3	60	–
SHF30	–	30	80	30	12	50	46	64	9 (M8)	M6	5.5	110	–
SHF35	**SHF35FC**	35	92	35	14	58	50	72	12 (M10)	M8	13.5	140	380
SHF40	**SHF40FC**	40	102	40	16	67	56	80	12 (M10)	M10	29	205	510
SHF50	**SHF50FC**	50	122	50	19	83	70	96	14 (M12)	M12	29	360	890
SHF60	**SHF60FC**	60	140	60	23	95	82	112	14 (M12)	M12	29	530	1,500

www.bergab.ru Берг АБ bergab@ya.ru Тел. (495)-228-06-21, факс (495) 223-3071

www.bergab.ru Берг АБ bergab@ya.ru Тел. (495)-228-06-21, факс (495) 223-3071

SA TYPE

— Shaft Support Rail —

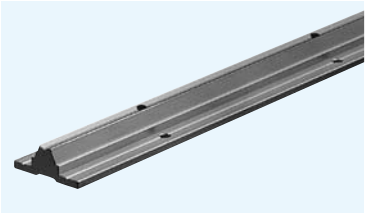

part number structure

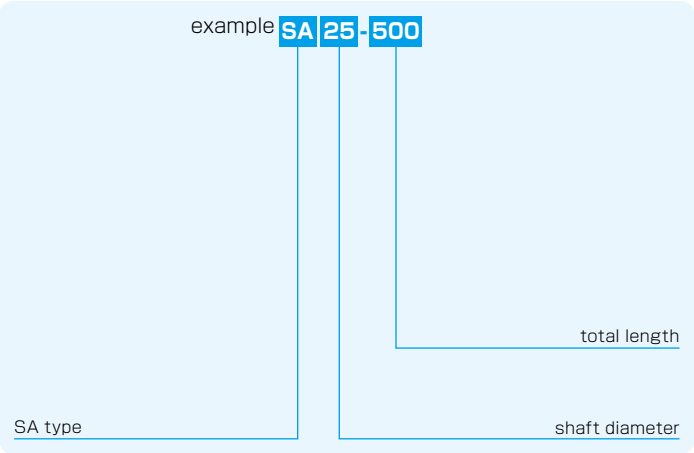

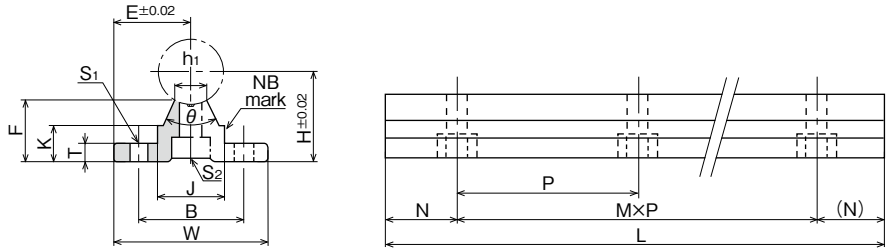

※ Mounting screws for the SN(S)B center-lined tapped shaft are included.

part number	shaft diameter mm	major dimensions H mm	E mm	W mm	L mm	F mm	T mm	K mm	J mm	h1 mm	θ	B mm	N mm	M×P mm	S1 mm	S2	mass g
SA10-200	10	18	16	32	200	13.5	4	8.9	12.4	4.7	80°	22	50	1×100	4.5	M4	110
SA10-300					300								50	2×100			160
SA10-400					400								50	3×100			220
SA10-500					500								50	4×100			270
SA10-600					600								50	5×100			330
SA13-200	13	21	17	34	200	15	4.5	9.8	15	6	80°	25	50	1×100	4.5	M4	140
SA13-300					300								50	2×100			210
SA13-400					400								50	3×100			280
SA13-500					500								50	4×100			350
SA13-600					600								50	5×100			420
SA16-200	16	25	20	40	200	17.8	5	11.7	18.5	8	80°	30	25	1×150	5.5	M5	200
SA16-300					300								75	1×150			300
SA16-400					400								50	2×150			400
SA16-500					500								25	3×150			500
SA16-600					600								75	3×150			600
SA20-200	20	27	22.5	45	200	17.7	5	10	19	8	50°	30	25	1×150	5.5	M6	200
SA20-300					300								75	1×150			300
SA20-400					400								50	2×150			400
SA20-500					500								25	3×150			510
SA20-600					600								75	3×150			610
SA25-200	25	33	27.5	55	200	21	6	12	21.5	8	50°	35	25	1×150	6.5	M6	290
SA25-300					300								50	1×200			430
SA25-400					400								100	1×200			580
SA25-500					500								50	2×200			730
SA25-600					600								100	2×200			880

part number	shaft diameter mm	major dimensions H mm	E mm	W mm	L mm	F mm	T mm	K mm	J mm	h1 mm	θ	B mm	N mm	M×P mm	S1 mm	S2	mass g
SA30-200	30	37	30	60	200	22.8	7	13	26.5	10.3	50°	40	25	1×150	6.5	M8	360
SA30-300					300								50	1×200			550
SA30-400					400								100	1×200			730
SA30-500					500								50	2×200			920
SA30-600					600								100	2×200			1,100
SA35-200	35	43	32.5	65	200	26.5	8	15.5	28	13	50°	45	25	1×150	9	M8	460
SA35-300					300								50	1×200			700
SA35-400					400								100	1×200			950
SA35-500					500								50	2×200			1,190
SA35-600					600								100	2×200			1,420
SA40-200	40	48	37.5	75	200	29.4	9	17	38	16	50°	55	25	1×150	9	M8	630
SA40-300					300								75	1×150			960
SA40-400					400								50	1×300			1,290
SA40-500					500								100	1×300			1,610
SA40-600					600								150	1×300			1,950
SA50-200	50	62	47.5	95	200	38.8	11	21	45	20	50°	70	25	1×150	11	M10	1,000
SA50-300					300								75	1×150			1,500
SA50-400					400								50	1×300			2,000
SA50-500					500								100	1×300			2,500
SA50-600					600								150	1×300			3,000

www.bergab.ru Берг АБ bergab@ya.ru Тел. (495)-228-06-21, факс (495) 223-3071

www.bergab.ru Берг АБ bergab@ya.ru Тел. (495)-228-06-21, факс (495) 223-3071

WH-A TYPE

– Shaft Supporter –

(Inch Standard)

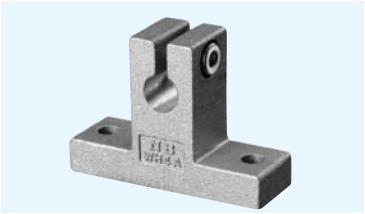

part number structure

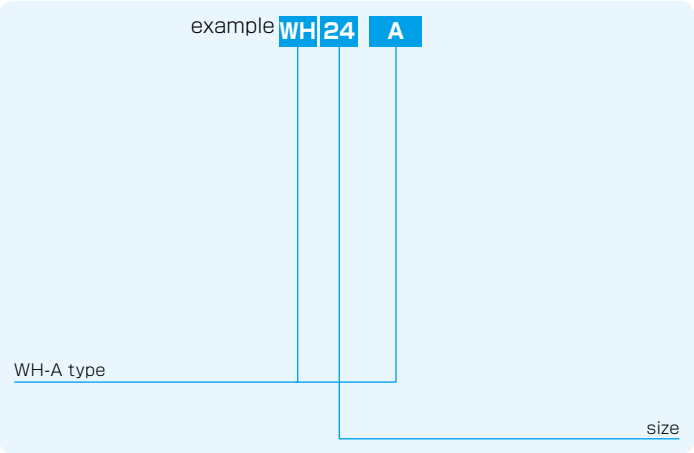

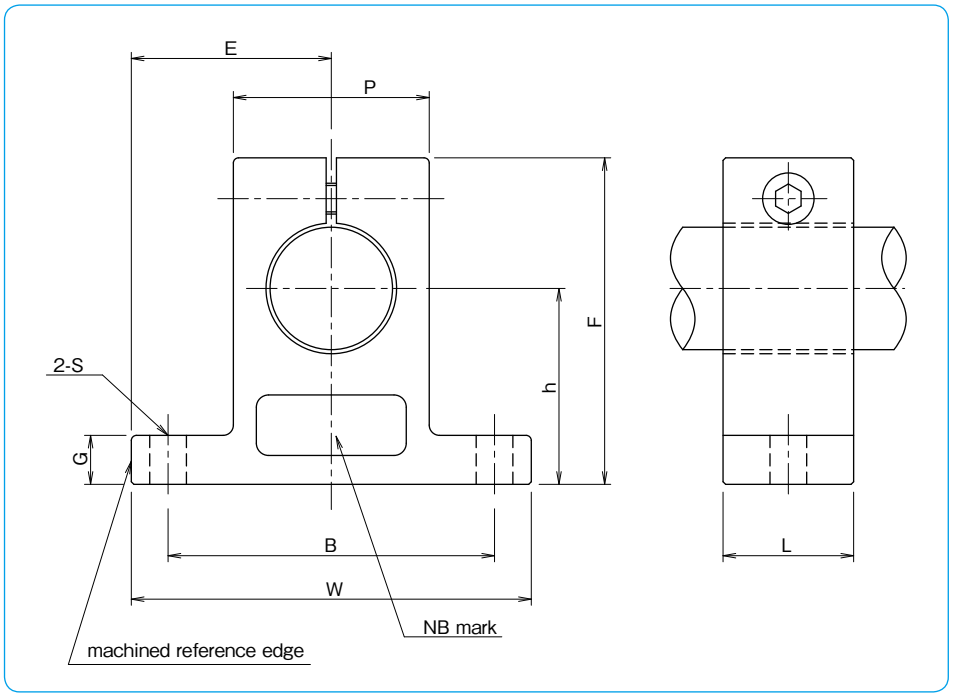

part number	shaft diameter inch	major dimensions h ±.001 inch	E ±.005 inch	W inch	L inch	F inch
WH 4A	.2500	.6875	.7500	1.500	.500	1.063
WH 6A	.3750	.7500	.8125	1.625	.563	1.187
WH 8A	.5000	1.0000	1.0000	2.000	.625	1.625
WH 10A	.6250	1.0000	1.2500	2.500	.688	1.750
WH 12A	.7500	1.2500	1.2500	2.500	.750	2.063
WH 16A	1.0000	1.5000	1.5315	3.063	1.000	2.500
WH 20A	1.2500	1.7500	1.8750	3.750	1.125	3.000
WH 24A	1.5000	2.0000	2.1875	4.375	1.250	3.437
WH 32A	2.0000	2.5000	2.7500	5.500	1.500	4.375

major dimensions G inch	P inch	B ±.01 inch	S inch	bolt# inch	mass lbs	part number
.250	.500	1.125	.156	# 6	.033	WH 4A
.250	.688	1.250	.156	# 6	.044	WH 6A
.250	.875	1.500	.188	# 8	.075	WH 8A
.313	1.000	1.875	.218	#10	.106	WH 10A
.313	1.250	2.000	.218	#10	.156	WH 12A
.375	1.500	2.500	.281	1/4	.294	WH 16A
.438	2.000	3.000	.346	5/16	.531	WH 20A
.500	2.250	3.500	.346	5/16	.725	WH 24A
.625	3.000	4.500	.406	3/8	1.400	WH 32A

1kg≒2.205lbs
1lb≒0.454kg

www.bergab.ru Берг АБ bergab@ya.ru Тел. (495)-228-06-21, факс (495) 223-3071

www.bergab.ru Берг АБ bergab@ya.ru Тел. (495)-228-06-21, факс (495) 223-3071

WA TYPE

– Shaft Support Rail –

(Inch Standard)

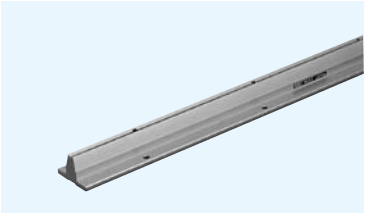

part number structure

example **WA 24-24 PD**

WA type — size — length — pre-drilled

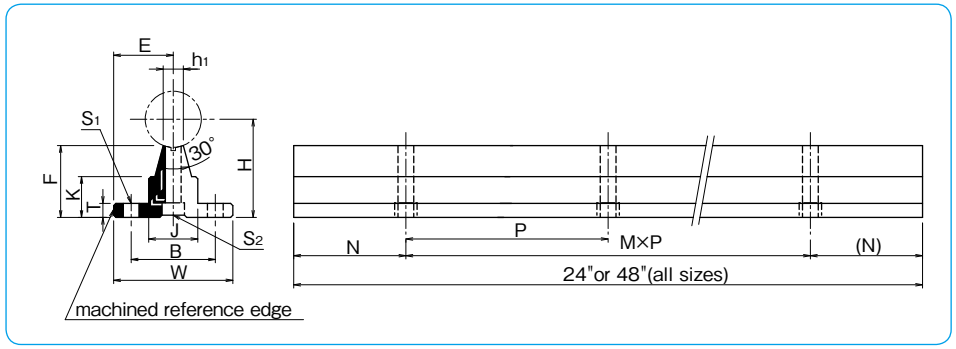

part number		shaft diameter	major dimensions H ±.001	major dimensions E ±.005	major dimensions W	major dimensions F	major dimensions T	major dimensions K	major dimensions J	major dimensions h1	mounting dimensions B ±.01	mounting dimensions N	mounting dimensions M×P	mounting dimensions S1 hole	mounting dimensions S1 bolt#	mounting dimensions S2 hole	mounting dimensions S2 bolt#	mass
		inch	inch	inch	inch	inch	inch	inch	inch	inch	inch	inch	inch	inch	inch	inch	inch	lbs
WA 8-	24PD	.5000	1.125	.7500	1.500	.903	.188	.466	.500	.255	1.000	2	5×4	.169	#6	.169	#6	1.326
	48PD												11×4					2.652
WA10-	24PD	.6250	1.125	.8125	1.625	.841	.250	.423	.500	.276	1.125	2	5×4	.193	#8	.193	#8	1.488
	48PD												11×4					2.976
WA12-	24PD	.7500	1.500	.8750	1.750	1.158	.250	.592	.625	.322	1.250	3	3×6	.221	#10	.221	#10	2.100
	48PD												7×6					4.200
WA16-	24PD	1.0000	1.750	1.0625	2.125	1.280	.250	.727	.875	.359	1.500	3	3×6	.281	1/4	.281	1/4	2.776
	48PD												7×6					5.552
WA20-	24PD	1.2500	2.125	1.2500	2.500	1.537	.313	.799	1.100	.437	1.875	3	3×6	.343	5/16	.343	5/16	4.060
	48PD												7×6					8.120
WA24-	24PD	1.5000	2.500	1.5000	3.000	1.798	.375	.922	1.375	.558	2.250	4	2×8	.343	5/16	.406	3/8	5.840
	48PD												5×8					11.680
WA32-	24PD	2.0000	3.250	1.8750	3.750	2.322	.500	1.450	1.500	.800	2.750	4	2×8	.406	3/8	.531	1/2	9.500
	48PD												5×8					19.000

All sizes are also available without pre-drilled mounting holes.
Complete shaft-rail assemblies are also available as well as custom drilling and lengths.
Please send drawings with customer specifications.

1kg≒2.205lbs
1lb≒0.454kg

LWA TYPE

– Low Shaft Support Rail –

(Inch Standard)

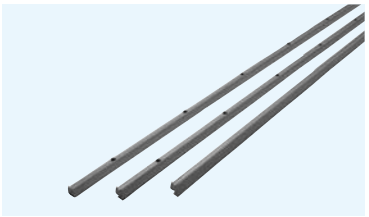

part number structure

example **LWA 24-48 PD**

LWA type — size — length — pre-drilled

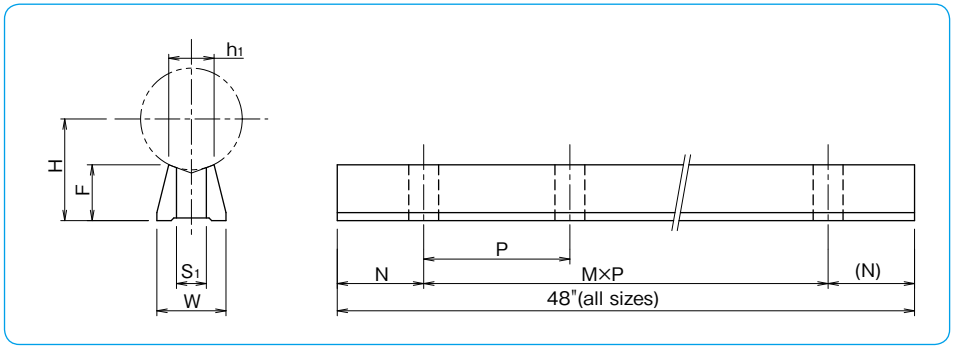

part number	shaft diameter	major dimensions H ±.002	major dimensions W	major dimensions F	major dimensions N	major dimensions M×P	major dimensions h1	major dimensions S1	mass
	inch	inch	inch	inch	inch	inch	inch	inch	lb
LWA 8-48 PD	.5000	.5625	.37	.341	2	11×4	.216	.169	0.11
LWA 10-48 PD	.6250	.6875	.45	.405	2	11×4	.269	.193	0.17
LWA 12-48 PD	.7500	.7500	.51	.409	3	7×6	.317	.224	0.20
LWA 16-48 PD	1.0000	1.0000	.69	.545	3	7×6	.422	.281	0.35
LWA 20-48 PD	1.2500	1.1875	.78	.617	3	7×6	.523	.343	0.44
LWA 24-48 PD	1.5000	1.3750	.96	.691	4	5×8	.623	.406	0.58
LWA 32-48 PD	2.0000	1.7500	1.18	.836	4	5×8	.824	.531	0.89

1kg≒2.205lbs
1lb≒0.454kg

www.bergab.ru Берг АБ bergab@ya.ru Тел. (495)-228-06-21, факс (495) 223-3071

www.bergab.ru Берг АБ bergab@ya.ru Тел. (495)-228-06-21, факс (495) 223-3071

SLIDE WAY

SLIDE TABLE

MINIATURE SLIDE

GONIO WAY

www.bergab.ru Берг АБ bergab@ya.ru Тел. (495)-228-06-21, факс (495) 223-3071

www.bergab.ru Берг АБ bergab@ya.ru Тел. (495)-228-06-21, факс (495) 223-3071

SLIDE WAY

The NB slide way is a non-recirculating linear motion bearing utilizing precision rollers. It is used primarily in optical and measurement equipment where high precision movement is required.

STRUCTURE AND ADVANTAGES

The NB slide way NV type comprises precisely ground rails and R-retainers with built-in STUDROLLERs and precision rollers. The rails have been optimally designed so that the STUDROLLERs move smoothly, and the STUDROLLERs and precision rollers incorporated in the R-retainers enable slip-free operation between the raceway surface and the rollers resulting in motion with minimal frictional resistance.
SV and SVW types consist of precision ground rails and precision caged-rollers. Since caged-rollers do not recirculate, there is only a minimum frictional resistance fluctuation. Also, there is a minimum difference between the static and dynamic frictional resistances.

Non-slip!

STUDROLLER System (Rivet Roller Structure)

The STUDROLLER system is based on a new concept to provide complete prevention of roller cage slippage during operation. This system permits usage in all orientations and positions.

Figure G-1 STUDROLLER System

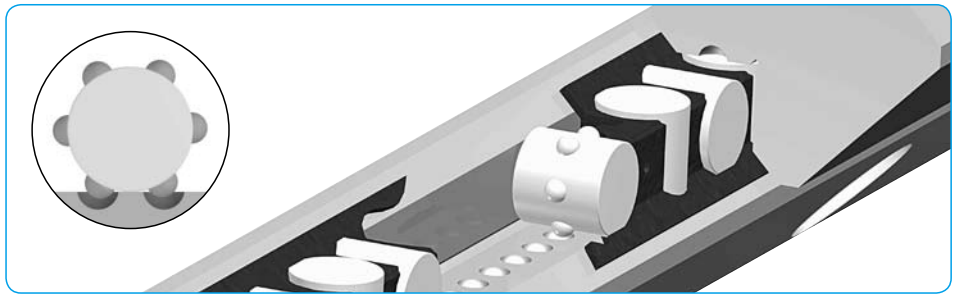

Suitable for Minute Motion

Because the frictional resistance is extremely small and there is only little difference between the static and dynamic frictional resistances, the NB slide way is well suited for minute motion, resulting in highly accurate linear movement.

Low-Speed Stability

Since the frictional resistance fluctuation is small even under low-load conditions, stable motion is obtained at from low to high speeds.

High Rigidity and High Load Capacity

Compared to the ball elements, the rollers provide a larger contact area and less elastic deformation, thus the NB slide way has high rigidity and high load capacity. With new NV rail design, the roller contact area is increased by 30 to 58% (Figure G-2). The number of effective rollers is increased by narrowing the roller pitch. Thus, the NV type has the load rating that is 1.3 to 2.5 times that of the SV type.

Low Noise

The slide way never produces recirculation noise nor roller-contact noise due to a use of roller cage, resulting in quiet motion.

All Stainless Steel Type Available

The anti-corrosion SVS/SVWS slide ways have all stainless steel components, making them ideal for use in clean room applications.

Figure G-2 Roller Contact Profile

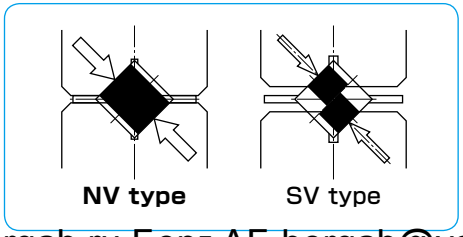

Figure G-3 Structure of NV type

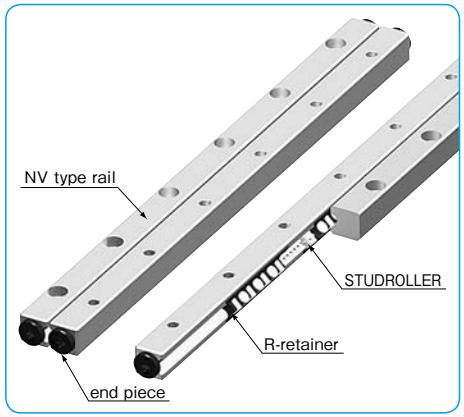

Figure G-4 Structure of SV type

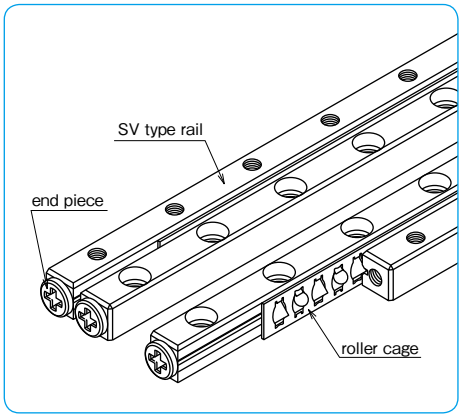

※To the NV type, fastening plates are attached for the purpose of maintaining the center position of the R-retainer before assembly. Please see Installation Procedure on page G-7 and remove the fastening plates before use.

TYPES

NV type

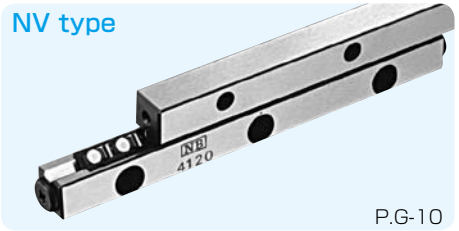

P.G-10

The NV slide way consists of a set of four rails, two R-retainers, and eight end pieces. It permits flexible design of the table which will best suit your application.

SV type

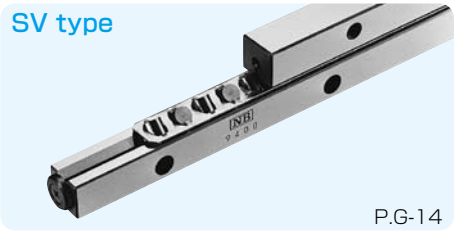

P.G-14

The SV slide way consists of a set of four rails, two R type roller cages, which have precision rollers in a cross arrangement, and eight end pieces. The all stainless steel option makes it suitable for use in corrosive environments.

SVW type

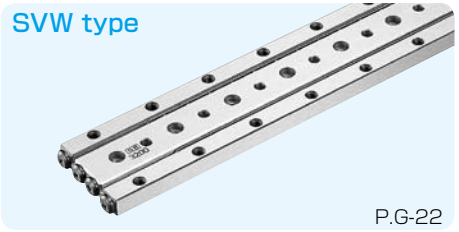

P.G-22

The SVW slide way consists of two SV-type rails, one W type rail, two R type roller cages, and eight end pieces. The use of a W-type rail serves for a compact design. The SVWS type is also available with all stainless steel components.

www.bergab.ru Берг АБ bergab@ya.ru Тел. (495)-228-06-21, факс (495) 223-3071

www.bergab.ru Берг АБ bergab@ya.ru Тел. (495)-228-06-21, факс (495) 223-3071

ACCURACY

The accuracy of the slide way is represented as parallelism measured across the full length with a method shown in Figure G-6. It is classified as high (blank), precision (P), or ultra precision (UP). Special accuracies can also be accommodated. Please contact NB for details.

Figure G-5 Parallelism

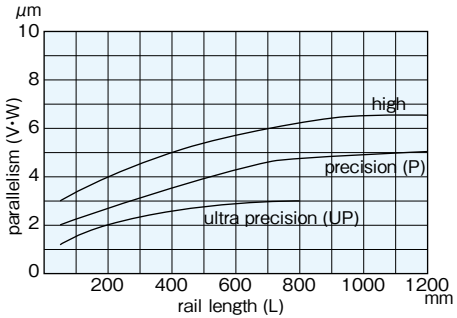

Figure G-6 Accuracy Measurement Method

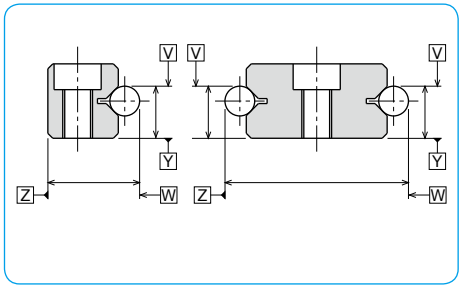

Ultra precision grade is available from size 1 to size 9.

RATED LIFE

The life of the slide way and the slide table is calculated with the following equations:

Rated Life

$$L=\left(\frac{f_T}{f_W}\cdot\frac{C}{P}\right)^{10/3}\cdot 50$$

L: rated life (km) f_T: temperature coefficient f_W: applied load coefficient
C: basic dynamic load rating (N) P: applied load (N)
※ Please refer to page Eng-5 for the coefficients.

Life Time

$$L_h=\frac{L\cdot 10^3}{2\cdot \ell_s\cdot n_1\cdot 60}$$

L_h: life time (hr) ℓ_s: stroke length (m)
n_1: number of cycles per minute (cpm)

LOAD RATING

The load rating for the slide way is obtained using the equations listed in Table G-1.

Table G-1 Load Rating

condition	single-rail usage	single-rail vertical usage	double-rail parallel usage
direction of load	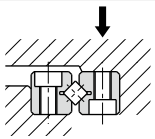	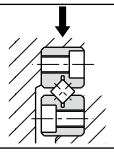	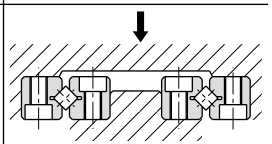
basic dynamic load rating C	$C=\left\{2P\left(\frac{Z}{2}-1\right)\right\}^{\frac{1}{36}}\cdot\left(\frac{Z}{2}\right)^{\frac{3}{4}}\cdot C_1$	$C=\left\{2P\left(\frac{Z}{2}-1\right)\right\}^{\frac{1}{36}}\cdot\left(\frac{Z}{2}\right)^{\frac{3}{4}}\cdot 2^{\frac{7}{9}}\cdot C_1$	
basic static load rating Co	$C_o=\frac{Z}{2}\cdot C_{o1}$	$C_o=\frac{Z}{2}\cdot C_{o1}\cdot 2$	
allowable load F	$F=\frac{Z}{2}\cdot F_1$	$F=\frac{Z}{2}\cdot F_1\cdot 2$	

C: basic dynamic load rating (N) Co: basic static load rating (N) F: allowable load (N) C_1: basic dynamic load rating per roller (N)
C_{o1}: basic static load rating per roller (N) F_1: allowable load per roller (N)
Z: number of rollers per cage Z/2: number of effective rollers (round down to whole number) P: roller pitch (mm)

The load rating of the NV type differs depending on the direction of the load.

Table G-2 Change of Load Rating Corresponding to Load Direction

basic dynamic load rating	normal vertical direction	1.0×C
	horizontal direction	0.85×C
	reverse vertical direction	0.7×C
basic static load rating	normal vertical direction	1.0×Co
	horizontal direction	0.85×Co
	reverse vertical direction	0.7×Co

※There may be a difference depending on the size. Please contact NB for details.
Consideration has been given to holes for STUDROLLERs in the raceway surface in calculation of load ratings.

Figure G-7 Direction of Load

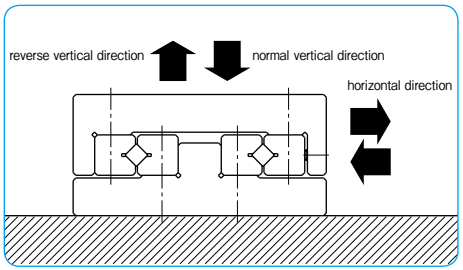

R·RS TYPE

– Standard Roller Cage –

part number structure

example **RS 6 - 15Z**

specification
R: standard roller
RS: stainless steel roller

size

number of rollers

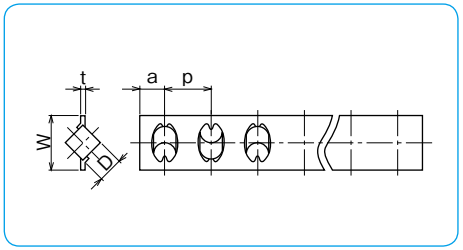

part number standard	part number anti-corrosion	D mm	t mm	W mm	p mm	a mm	C_1 N	C_{o1} N	F_1 N
R 1	RS1	1.5	0.2	3.8	2.5	2	154	119	39.8
R 2	RS2	2	0.3	5.6	4	2.5	360	293	97.8
R 3	RS3	3	0.4	7.6	5	3	824	649	216
R 4	RS4	4	0.4	10.4	7	4.5	1,660	1,320	442
R 6	RS6	6	0.7	14	8.5	5.5	3,840	2,960	987
R 9	—	9	0.7	19	14	7.5	9,330	7,070	2,350
R12	—	12	1.0	25	20	10	18,900	14,500	4,840

cage material: stainless steel C_1: dynamic load rating per roller C_{o1}: static load rating per roller
F_1: allowable load per roller

RA·RAS TYPE

– Aluminum Roller Cage –

part number structure

example **RAS 6 - 15Z**

specification
RA: standard roller
RAS: stainless steel roller

size

number of rollers

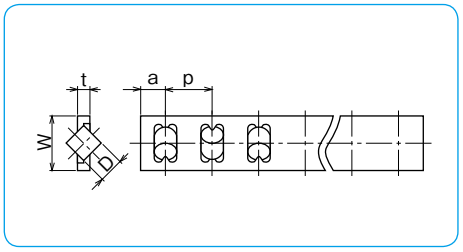

part number standard	part number anti-corrosion	D mm	t mm	W mm	p mm	a mm	C_1 N	C_{o1} N	F_1 N
RA3	RAS3	3	1.2	7.6	5	3	824	649	216
RA4	RAS4	4	1.4	10.4	7	4.5	1,660	1,320	442
RA6	RAS6	6	2.1	14	8.5	5.5	3,840	2,960	987
RA9	—	9	3.0	20	14	7.5	9,330	7,070	2,350

cage material: aluminum alloy C_1: dynamic load rating per roller C_{o1}: static load rating per roller
F_1: allowable load per roller

www.bergab.ru Берг АБ bergab@ya.ru Тел. (495)-228-06-21, факс (495) 223-3071

www.bergab.ru Берг АБ bergab@ya.ru Тел. (495)-228-06-21, факс (495) 223-3071

STROKE

Please contact NB for a non-standard stroke length for the NV type. When the stroke of SV type or SVW type is changed, the stroke length must be determined and the load rating should be re-estimated as follows.

Stroke of SV type, SVW type

When the slide way moves along the rail, the cage moves half the distance traveled by the slide way in the same direction. Therefore, although the work may be fixed on the table, the distance between the load center and the cage center will change. To achieve stable accuracy, determine the stroke and the length of the rail as follows.

Figure G-8

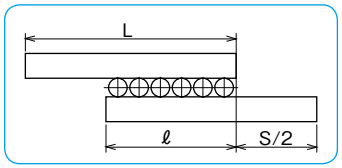

Rail Length (L)
When the stroke is 400mm or over
$S \leqq L/1.5$
When the stroke is less than 400 mm,
$S \leqq L$

Cage length (ℓ)
$\ell \leqq L - \frac{S}{2}$
Number of rollers (Z)
$Z = \frac{\ell - 2a}{p} + 1$

ℓ: cage length (mm) S: stroke (mm)
L: rail length (mm)

a,p: Please refer to roller cage dimensions (page G-5)

LUBRICATION AND DUST PREVENTION

Lubrication

The slide way is pre-lubricated with lithium soap-based grease prior to shipment for immediate use. Make sure to relubricate with a similar type of grease periodically according to the operating conditions. NB also provides low dust generation grease. Please refer to page Eng-39 for details.

Dust Prevention

Foreign particles or dust in the slide way affects the motion accuracy and shortens the life time. In a harsh environment please provide side covers for dust prevention. (refer to Figure G-9)

Figure G-9 Example of Dust Prevention Mechanism

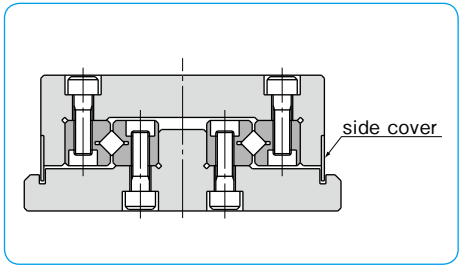

MOUNTING

Example

Figure G-10 NV type, SV type

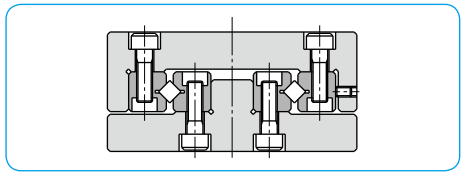

Figure G-11 SVW type

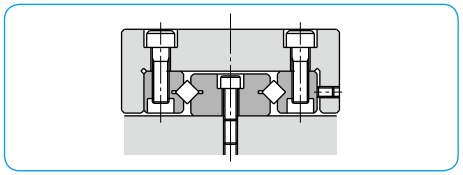

Accuracy of Mounting Surface

To maximize the performance of the NB slide way, it is recommended that the accuracy of the mounting surface to be equal to or greater than the degree of parallelism of the slide way.

Parallelism of surface 1 against surface A
Perpendicularity of surface 2 against surface A
Parallelism of surface 3 against surface B
Perpendicularity of surface 4 against surface B
Parallelism of surface 2 against surface C
Parallelism of surface 4 against surface C

Figure G-12 Accuracy of Mounting Surface

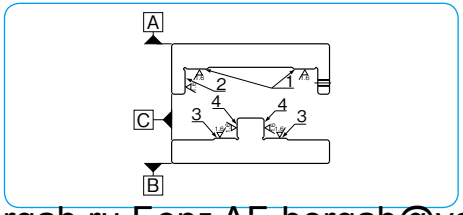

INSTALLATION PROCEDURE OF NV TYPE

Installation Procedure

※Please read "Use and Handling Precautions" before installation.

(1) Remove burrs, scratches, and dust from the rail-mounting surface of the bed and the table, be careful to prevent contamination during assembly.
(2) Apply low-viscosity oil to the contact surfaces, and align the bed and the table. (Figure G-13a)
(3) Set the reference surface onto the mounting surface with the rails fastened. Set the table in the center position, and tighten the adjustment screws lightly so that almost no gap remains. (Figure G-13b)
(4) Keep the table in the center, tighten the rail mounting bolts lightly, loosen the end pieces of both ends, and remove the fastening plates. Following this, lightly retighten the end pieces.
(5) While maintaining the conditions of (4), gently move the assembly through its stroke to check if the maximum stroke is secured, and if there is no irregularity.
(6) Move the table to the center and tighten only the adjustment screws on the R-retainer with the recommended torque shown in Table G-3. (Figure G-13c)
(7) Gently move the table to one stroke end, and check that the table has surely come into contact with the external mechanical stopper. Following this, tighten the adjustment screws in the same manner as (6). (Figure G-13d)
(8) Move the table to the opposite stroke end, and tighten in the same manner as (6). (Figure G-13e)
(9) Fasten the mounting screws on rails 1, 2, and 3 by tightening with the recommended torque shown in Table G-4. (Figure G-13f)
(10) Set the dial indicators to the center of the table and to the side (reference surface) of the table. (Figure G-13g)
(11) Perform the final preload adjustment. While moving the table back and forth, repeat steps (6) to (8) until the dial indicators show a minimum deviation.
(12) Fasten rail 4 securely with the recommended torque. As for the adjustment screws, successively tighten the mounting screws on the R-retainer by moving the table.
(13) Recheck the motion accuracy while moving the table.
(14) Tighten the end pieces finally.

Figure G-13 Installation Method

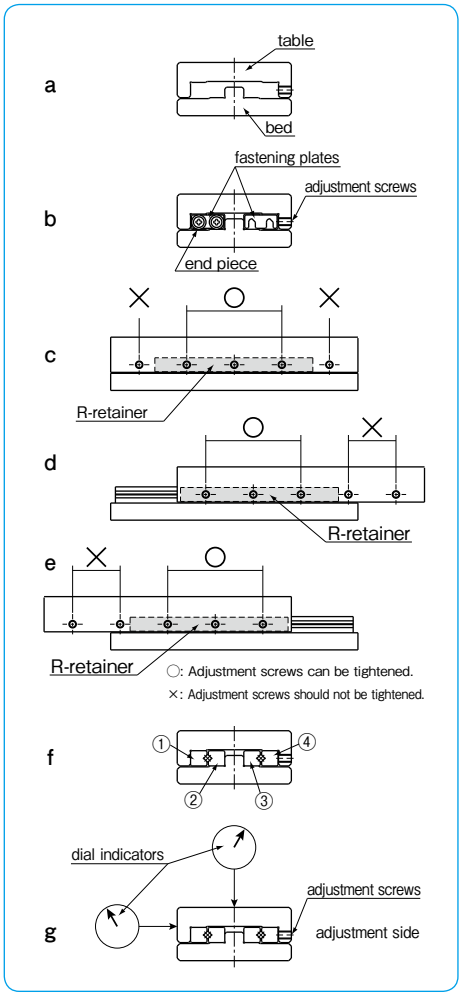

www.bergab.ru Берг АБ bergab@ya.ru Тел. (495)-228-06-21, факс (495) 223-3071

www.bergab.ru Берг АБ bergab@ya.ru Тел. (495)-228-06-21, факс (495) 223-3071

INSTALLATION PROCEDURE OF SV TYPE

Installation Procedure

(1) Remove burrs, scratches, and dust from the rail-mounting surface of the bed and the table, be careful to prevent contamination during assembly.
(2) Apply low-viscosity oil to contact surfaces. Attach rails ①-③ by tightening screws with the recommended torque (Table G-4). (Figure G-14a)
(3) Temporarily attach rail ④ on the adjustment side. (Figure G-14b)
(4) Remove end pieces on one end. Carefully insert roller cages between rails. (Figure G-14c)
(5) Re-attach end pieces.
(6) Move the table slowly to each stroke end to position roller cages at the center of the rails.
(7) Set the dial indicators to the center of the table and to the side (reference surface) of the table. (Figure G-14d)
(8) Move the table to one stroke end. Lightly tighten adjustment screws on the roller cage. (Figure G-14e)
(9) Move the table to the opposite stroke end. Similarly lightly tighten adjustment screws on the roller cage. (Figure G-14f)
(10) Move table to the center and lightly tighten center adjustment screws. (Figure G-14g)
(11) Repeat steps (8) ~ (10) until the indicators show a minimum deviation. Please do not apply an excessive preload.
(12) Make final adjustment of preload. Repeat steps (8) ~ (10) and tighten the adjustment screws with the recommended torque listed in Table G-3.
(13) Fasten the rail ④ securely with the recommended torque. As with the adjustment screws, successively tighten the mounting screws by moving the table.

Figure G-14 Installation Method

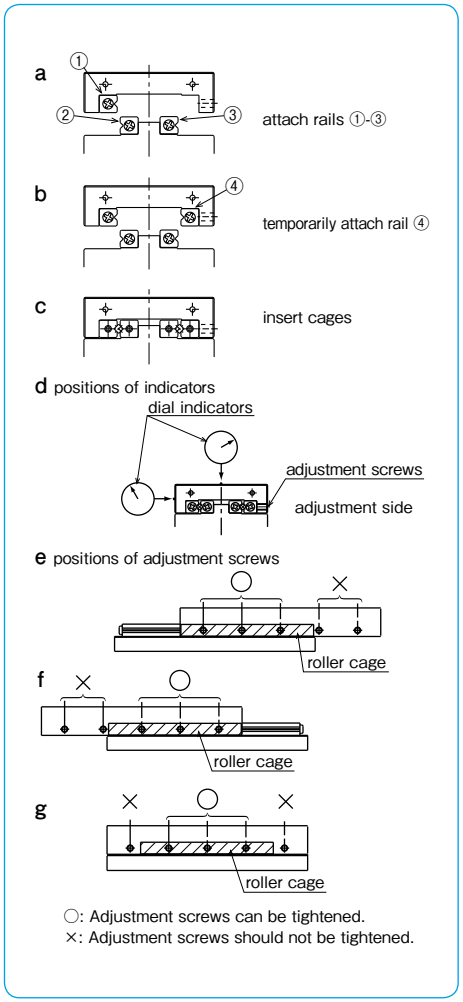

Table G-3 Recommended Torque for Adjustment Screw Unit/N・m

part number	size	torque
SV1	M2	0.008
NV2, SV2	M3	0.012
NV3, SV3	M4	0.05
NV4, SV4	M4	0.08
NV6, SV6	M5	0.20
NV9, SV9	M6	0.40

Table G-4 Recommended Torque for Mounting screw Unit/N・m

size	torque
M2	0.4
M3	1.4
M4	3.2
M5	6.6
M6	11.2
M8	27.6

(for steel alloy screw)

SPECIAL MOUNTING SCREW BT TYPE

To install the slide way using its counterbore, use of the BT type special mounting screw is recommended.

Figure G-15 Special Mounting Screw

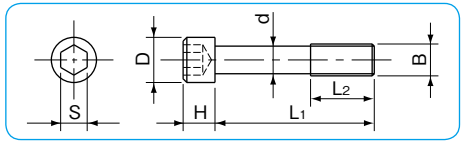

Table G-5 Special Mounting Screw

part number	B	d mm	D mm	H mm	L_1 mm	L_2 mm	S mm	applicable size
BT 3	M3	2.3	5	3	12	5	2.5	**NV 3, SV 3**
BT 4	M4	3.1	5.8	4	15	7	3	**NV 4, SV 4**
BT 6	M5	3.9	8	5	20	8	4	**NV 6, SV 6**
BT 9	M6	4.6	8.5	6	30	12	5	**NV 9, SV 9**
BT12	M8	6.25	11.3	8	40	17	6	**NV12, SV12**

USE AND HANDLING PRECAUTIONS

Careful Handling

Dropping the slide way causes the rolling elements to make dents in the raceway surface. This will prevent smooth motion and will also affect accuracy. Be sure to handle the product with care.
The NV type is packaged as a set of rails and R-retainers. Do not separate or disassemble until assembly/installation is completed. Precision is not guaranteed if disassembled.

Fastening Plates

For the NV type, fastening plates are attached at both end faces of the rails to maintain the R-retainer center position prior to assembly. The fastening plates are not required after the NV type is mounted to a table and bed, however, when removal of the NV type is necessary such as when it will be reassembled, be sure to return the R-retainer to the proper center position, secure the fastening plates with the end pieces, and then remove the NV type.

Specified Allowable Stroke

For the NV type, exceeding the specified stroke (over-stroke) shall cause the raceway surface of the rail to be damaged and the performance of the STUDROLLER to drastically deteriorate. Be sure to provide external mechanical stoppers and use the product within 80% of the specified allowable stroke.

Adjustment

Using the product with insufficient accuracy of the mounting surface or before adjusting the preload will cause the motion accuracy of the product to drop and will have a negative influence upon product life and accuracy. Make sure to assemble, install, and adjust the product with care.

Operating Temperature

The NV type uses resin parts. Please use the product in environments that are lower than 80℃ .

Use as a Set

The accuracy of the rails has been matched within each set. Note that the accuracy will be affected when the rails of different sets are combined.

Allowable Load

The allowable load is a load under which the sum of elastic deformations of the rolling element and the raceway in the contact area subject to the maximum contact stress is small enough to guarantee smooth rolling movement. When very smooth and highly accurate linear motion is required, make sure to use the product within the allowable load.

Cage Slippage

In the SV/SVW type, when used under high-speed, unbalanced-load, or vibrational conditions, cage slippage may occur. The stroke length should be determined with sufficient margin, and an excessive preload should be avoided.

End Pieces

End pieces are attached to each end of the slide way to prevent removal of the cage. Do not use them as a mechanical stopper.

Knock Pin Hole

When using SVW type knock pin holes to attach a slide way, please do the hole-machining on the mounting surface after attaching the W type rail. After machining, remove the chips completely and wash as required.

www.bergab.ru Берг АБ bergab@ya.ru Тел. (495)-228-06-21, факс (495) 223-3071

www.bergab.ru Берг АБ bergab@ya.ru Тел. (495)-228-06-21, факс (495) 223-3071

NV TYPE
−NV2／NV3／NV4−

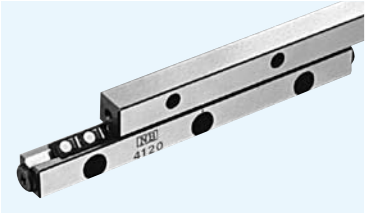

part number structure

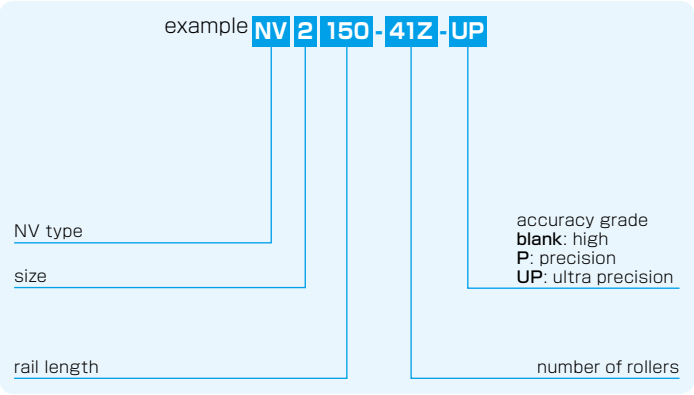

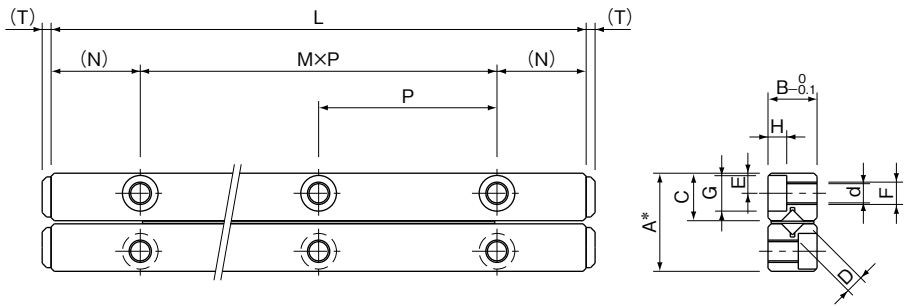

High grade: A-0.2 0 Precision grade (P): A-0.1 0 Ultra Precision grade (UP): A-0.1 0
One set consists of 4 rails, 2 R-retainers, and 8 end pieces.

part number	stroke ST mm	roller diameter D mm	number of rollers Z	L mm	A mm	B mm	C mm	M×P mm	N mm	E mm	F mm	d mm	G mm	H mm	T mm	basic load rating dynamic C N	basic load rating static Co N	allowable load F N	mass g	size
NV2030- 5Z	18	2	5	30	12	6	5.7	1×15	7.5	2.5	M3	2.55	4.4	2	2	1,360	1,520	500	33	2030
2045- 9Z	25		9	45				2×15								2,330	3,050	1,010	49	2045
2060-15Z	30		15	60				3×15								3,990	6,110	2,030	62	2060
2075-19Z	40		19	75				4×15								4,740	7,630	2,540	74	2075
2090-23Z	50		23	90				5×15								5,460	9,160	3,050	91	2090
2105-27Z	65		27	105				6×15								6,160	10,600	3,560	103	2105
2120-33Z	70		33	120				7×15								6,830	12,200	4,070	120	2120
2135-37Z	80		37	135				8×15								7,490	13,700	4,580	132	2135
2150-41Z	90		41	150				9×15								8,130	15,200	5,090	149	2150
2165-47Z	95		47	165				10×15								9,370	18,300	6,110	161	2165
2180-51Z	100		51	180				11×15								9,970	19,800	6,620	174	2180
NV3050- 9Z	25	3	9	50	18	8	8.65	1×25	12.5	3.5	M4	3.3	6	3.1	2	6,150	8,060	2,680	97	3050
3075-13Z	48		13	75				2×25								8,440	12,100	4,030	140	3075
3100-19Z	60		19	100				3×25								12,500	20,100	6,720	192	3100
3125-23Z	83		23	125				4×25								14,400	24,200	8,060	245	3125
3150-29Z	90		29	150				5×25								16,300	28,200	9,410	290	3150
3175-35Z	103		35	175				6×25								19,800	36,300	12,100	337	3175
3200-41Z	113		41	200				7×25								21,500	40,300	13,400	385	3200
3225-43Z	150		43	225				8×25								23,200	44,300	14,700	434	3225
NV4080- 9Z	60	4	9	80	22	11	10.65	1×40	20	4.5	M5	4.3	8	4.2	2	12,100	15,700	5,250	265	4080
4120-17Z	75		17	120				2×40								20,700	31,500	10,500	400	4120
4160-23Z	105		23	160				3×40								28,500	47,200	15,700	530	4160
4200-29Z	130		29	200				4×40								32,100	55,100	18,300	660	4200
4240-37Z	143		37	240				5×40								39,000	70,900	23,600	800	4240
4280-43Z	170		43	280				6×40								45,600	86,600	28,800	930	4280

major dimensions

The basic static load rating is the value at the center of the stroke.

1N≒0.102kgf

www.bergab.ru Берг АБ bergab@ya.ru Тел. (495)-228-06-21, факс (495) 223-3071

www.bergab.ru Берг АБ bergab@ya.ru Тел. (495)-228-06-21, факс (495) 223-3071

NV TYPE
–NV6/NV9/NV12–

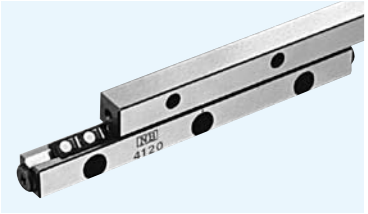

part number structure

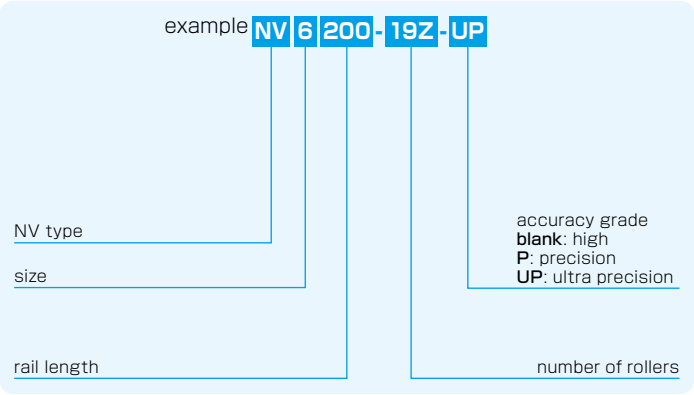

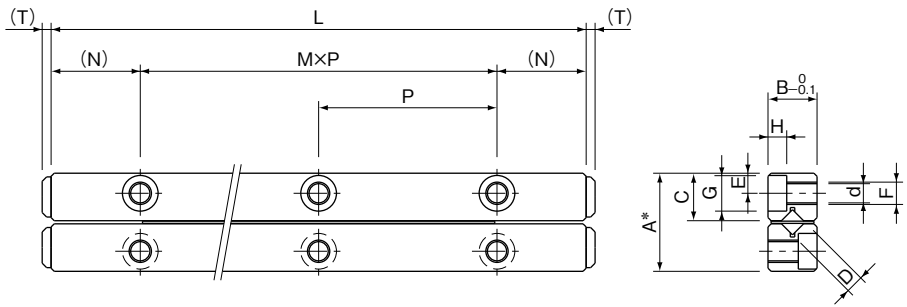

High grade: A-0.2 0 Precision grade (P): A-0.1 0 Ultra Precision grade (UP): A-0.1 0
One set consists of 4 rails, 2 R-retainers, and 8 end pieces.

part number	stroke ST mm	roller diameter D mm	number of rollers Z	major dimensions L mm	A mm	B mm	C mm	M×P mm	N mm	E mm
NV6100- 9Z	63	6	9	100	31	15	15.15	1×50	25	6
6150- 15Z	85		15	150				2×50		
6200- 19Z	135		19	200				3×50		
6250- 25Z	158		25	250				4×50		
6300- 31Z	180		31	300				5×50		
6350- 35Z	230		35	350				6×50		
6400- 39Z	275		39	400				7×50		
NV9200- 13Z	120	9	13	200	44	22	21.5	1×100	50	9
9300- 21Z	170		21	300				2×100		
9400- 29Z	220		29	400				3×100		
9500- 35Z	300		35	500				4×100		
NV12300- 15Z	180	12	15	300	58	28	28.5	2×100	50	12
12400- 21Z	230		21	400				3×100		
12500- 27Z	280		27	500				4×100		
12600- 31Z	380		31	600				5×100		

The basic static load rating is the value at the center of the stroke.

F mm	d mm	G mm	H mm	T mm	basic load rating dynamic C N	static Co N	allowable load F N	mass g	size
M6	5.2	9.5	5.2	3	29,600	37,500	12,500	650	6100
					50,900	75,100	25,000	970	6150
					60,600	93,900	31,300	1,300	6200
					69,800	112,000	37,500	1,620	6250
					87,400	150,000	50,100	1,940	6300
					95,800	169,000	56,300	2,360	6350
					104,000	187,000	62,600	2,780	6400
M8	6.8	10.5	6.2	4	96,000	128,000	42,600	2,720	9200
					143,000	213,000	71,100	4,080	9300
					186,000	298,000	99,500	5,440	9400
					226,000	384,000	128,000	6,790	9500
M10	8.5	13.5	8.2	4	228,000	317,000	105,000	6,770	12300
					271,000	396,000	132,000	9,040	12400
					352,000	555,000	185,000	11,300	12500
					391,000	635,000	211,000	13,560	12600

1N≒0.102kgf

www.bergab.ru Берг АБ bergab@ya.ru Тел. (495)-228-06-21, факс (495) 223-3071

www.bergab.ru Берг АБ bergab@ya.ru Тел. (495)-228-06-21, факс (495) 223-3071

SV TYPE
–SV1/SV2–

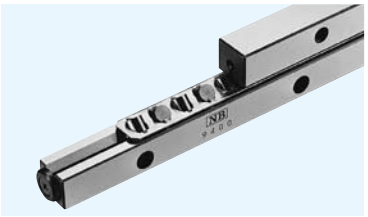

part number structure

example **SVS 2 150 - RA 26Z - UP**

- specification
  SV: standard
  SVS: anti-corrosion
- size
- rail length
- cage type
  blank: standard cage
  RA: aluminum cage standard roller
- number of rollers
- accuracy grade
  blank: high
  P: precision
  UP: ultra precision

※Refer to page G-5 for information on cage types.

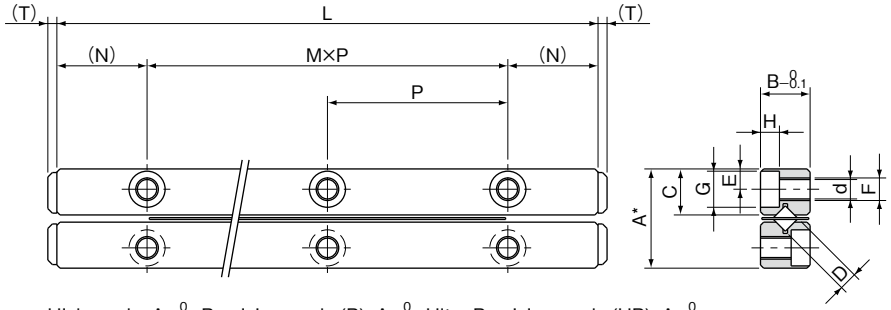

High grade: A-0.2 Precision grade (P): A-0.1 Ultra Precision grade (UP): A-0.1
One set consists of 4 rails, 2 roller cages, and 8 end pieces.

part number standard	part number anti-corrosion	stroke ST mm	roller diameter D mm	number of rollers Z	L mm	A mm	B mm	C mm
SV 1020-5Z	SVS 1020-5Z	12	1.5	5	20	8.5	4	3.8
1030-7Z	1030-7Z	20		7	30			
1040-10Z	1040-10Z	27		10	40			
1050-13Z	1050-13Z	32		13	50			
1060-16Z	1060-16Z	37		16	60			
1070-19Z	1070-19Z	42		19	70			
1080-21Z	1080-21Z	50		21	80			
SV 2030-5Z	SVS 2030-5Z	18	2	5	30	12	6	5.5
2045-8Z	2045-8Z	24		8	45			
2060-11Z	2060-11Z	30		11	60			
2075-13Z	2075-13Z	44		13	75			
2090-16Z	2090-16Z	50		16	90			
2105-18Z	2105-18Z	64		18	105			
2120-21Z	2120-21Z	70		21	120			
2135-23Z	2135-23Z	84		23	135			
2150-26Z	2150-26Z	90		26	150			
2165-29Z	2165-29Z	95		29	165			
2180-32Z	2180-32Z	100		32	180			

major dimensions M×P mm	N mm	E mm	F	d mm	G mm	H mm	T mm	basic load rating dynamic C N	static Co N	allowable load F N	mass g	size
1×10	5	1.8	M2	1.65	3	1.4	0.8	464	476	158	11	1020
2×10								641	714	237	14	1030
3×10								959	1,190	396	18	1040
4×10								1,100	1,420	475	22	1050
5×10								1,380	1,900	633	26	1060
6×10								1,510	2,140	712	30	1070
7×10								1,650	2,380	792	34	1080
1×15	7.5	2.5	M3	2.55	4.4	2	2	1,090	1,170	390	28	2030
2×15								1,900	2,340	780	42	2045
3×15								2,270	2,930	976	55	2060
4×15								2,620	3,510	1,170	69	2075
5×15								3,280	4,680	1,560	83	2090
6×15								3,590	5,270	1,750	96	2105
7×15								3,900	5,860	1,950	110	2120
8×15								4,210	6,440	2,140	123	2135
9×15								4,790	7,610	2,530	137	2150
10×15								5,080	8,200	2,730	151	2165
11×15								5,640	9,370	3,120	165	2180

1N≒0.102kgf

※Maximum Rail Length (standard type only)

part number	Max. length
SV1	200mm
SV2	450mm

※Please contact NB for details.

www.bergab.ru Берг АБ bergab@ya.ru Тел. (495)-228-06-21, факс (495) 223-3071

www.bergab.ru Берг АБ bergab@ya.ru Тел. (495)-228-06-21, факс (495) 223-3071

SV TYPE
−SV3／SV4−

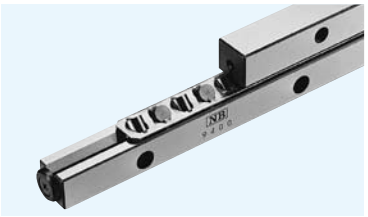

part number structure

example **SVS 4 200 - RAS 19Z - UP**

- specification
  SV: standard
  SVS: anti-corrosion
- size
- rail length
- cage type
  blank: standard cage
  RA: aluminum cage standard roller
  RAS: aluminum cage stainless steel roller
- number of rollers
- accuracy grade
  blank: high
  P: precision
  UP: ultra precision

※Refer to page G-5 for information on cage types.

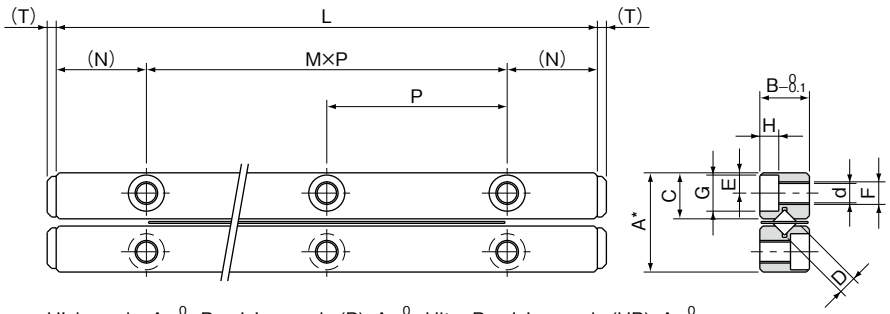

High grade: A-0.2 Precision grade (P): A-0.1 Ultra Precision grade (UP): A-0.1
One set consists of 4 rails, 2 roller cages, and 8 end pieces.

part number standard	part number anti-corrosion	stroke ST mm	roller diameter D mm	number of rollers Z	L mm	A mm	B mm	C mm
SV 3050-7Z	SVS 3050-7Z	28	3	7	50	18	8	8.3
3075-10Z	3075-10Z	48		10	75			
3100-14Z	3100-14Z	58		14	100			
3125-17Z	3125-17Z	78		17	125			
3150-21Z	3150-21Z	88		21	150			
3175-24Z	3175-24Z	105		24	175			
3200-28Z	3200-28Z	115		28	200			
3225-31Z	3225-31Z	135		31	225			
3250-35Z	3250-35Z	145		35	250			
3275-38Z	3275-38Z	165		38	275			
3300-42Z	3300-42Z	175		42	300			
3325-45Z	3325-45Z	195		45	325			
3350-49Z	3350-49Z	205		49	350			
SV 4080-7Z	SVS 4080-7Z	58	4	7	80	22	11	10.2
4120-11Z	4120-11Z	82		11	120			
4160-15Z	4160-15Z	105		15	160			
4200-19Z	4200-19Z	130		19	200			
4240-23Z	4240-23Z	150		23	240			
4280-27Z	4280-27Z	175		27	280			
4320-31Z	4320-31Z	200		31	320			
4360-35Z	4360-35Z	225		35	360			
4400-39Z	4400-39Z	250		39	400			
4440-43Z	4440-43Z	270		43	440			
4480-47Z	4480-47Z	295		47	480			

※Maximum Rail Length (standard type only)

part number	Max. length
SV3	700mm
SV4	700mm

※Please contact NB for details.

major dimensions M×P mm	N mm	E mm	F	d mm	G mm	H mm	T mm	basic load rating dynamic C N	static Co N	allowable load F N	mass g	size
1×25	12.5	3.5	M4	3.3	6	3.1	2	3,490	3,890	1,290	94	3050
2×25								5,230	6,490	2,160	135	3075
3×25								6,810	9,080	3,020	187	3100
4×25								7,560	10,300	3,450	234	3125
5×25								9,000	12,900	4,320	281	3150
6×25								10,300	15,500	5,180	327	3175
7×25								11,700	18,100	6,040	374	3200
8×25								12,300	19,400	6,480	421	3225
9×25								13,600	22,000	7,340	468	3250
10×25								14,800	24,600	8,200	514	3275
11×25								16,000	27,200	9,070	561	3300
12×25								16,600	28,500	9,500	608	3325
13×25								17,800	31,100	10,300	655	3350
1×40	20	4.5	M5	4.3	8	4.2	2	7,110	7,920	2,640	255	4080
2×40								10,600	13,200	4,400	385	4120
3×40								13,800	18,400	6,160	510	4160
4×40								16,800	23,700	7,920	635	4200
5×40								19,700	29,000	9,680	770	4240
6×40								22,400	34,300	11,400	905	4280
7×40								25,100	39,600	13,200	1,020	4320
8×40								27,600	44,800	14,900	1,160	4360
9×40								30,200	50,100	16,700	1,280	4400
10×40								32,600	55,400	18,400	1,410	4440
11×40								35,000	60,700	20,200	1,540	4480

1N≒0.102kgf

www.bergab.ru Берг АБ bergab@ya.ru Тел. (495)-228-06-21, факс (495) 223-3071

www.bergab.ru Берг АБ bergab@ya.ru Тел. (495)-228-06-21, факс (495) 223-3071

SV TYPE
–SV6／SV9–

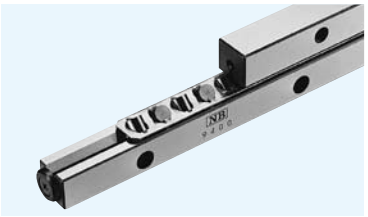

part number structure

example **SVS 6 200-RAS 16Z-UP**

- specification: **SV**: standard; **SVS**: anti-corrosion
- size
- rail length
- cage type: **blank**: standard cage; **RA**: aluminum cage standard roller; **RAS**: aluminum cage stainless steel roller
- number of rollers
- accuracy grade: **blank**: high; **P**: precision; **UP**: ultra precision

※Refer to page G-5 for information on cage types.

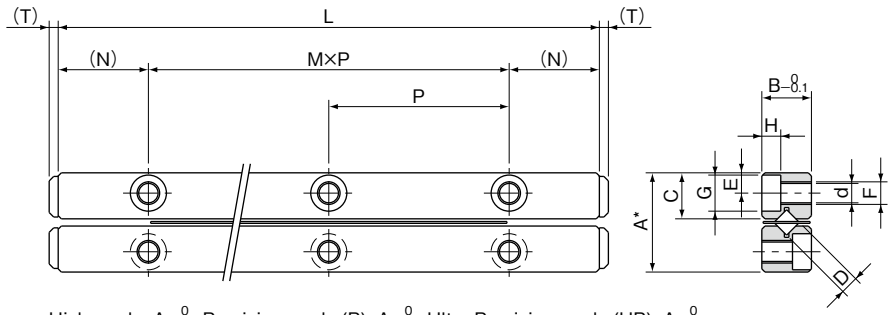

High grade: A-0.2 Precision grade (P): A-0.1 Ultra Precision grade (UP): A-0.1
One set consists of 4 rails, 2 roller cages, and 8 end pieces.

part number standard	part number anti-corrosion	stroke ST mm	roller diameter D mm	number of rollers Z	L mm	A mm	B mm	C mm
SV 6100-8Z	SVS 6100-8Z	55	6	8	100	31	15	14.2
6150-12Z	6150-12Z	85		12	150			
6200-16Z	6200-16Z	120		16	200			
6250-20Z	6250-20Z	150		20	250			
6300-24Z	6300-24Z	185		24	300			
6350-28Z	6350-28Z	215		28	350			
6400-32Z	6400-32Z	245		32	400			
6450-36Z	6450-36Z	280		36	450			
6500-40Z	6500-40Z	310		40	500			
6600-49Z	6600-49Z	360		49	600			
SV 9200-10Z	—	115	9	10	200	44	22	20.2
9300-15Z	—	175		15	300			
9400-20Z	—	235		20	400			
9500-25Z	—	295		25	500			
9600-30Z	—	355		30	600			
9700-35Z	—	415		35	700			
9800-40Z	—	475		40	800			
9900-45Z	—	535		45	900			
91000-50Z	—	595		50	1,000			

major dimensions M×P mm	N mm	E mm	F	d mm	G mm	H mm	T mm	basic load rating dynamic C N	static Co N	allowable load F N	mass g	size
1×50	25	6	M6	5.2	9.5	5.2	3	20,700	23,600	7,880	628	6100
2×50								28,500	35,500	11,800	942	6150
3×50								35,700	47,300	15,700	1,260	6200
4×50								42,500	59,200	19,700	1,570	6250
5×50								49,000	71,000	13,600	1,880	6300
6×50								55,300	82,800	27,600	2,200	6350
7×50								61,400	94,700	31,500	2,510	6400
8×50								67,300	106,000	35,400	2,830	6450
9×50								73,100	118,000	39,400	3,140	6500
11×50								84,200	142,000	47,300	3,770	6600
1×100	50	9	M8	6.8	10.5	6.2	4	60,900	70,700	23,500	2,720	9200
2×100								79,300	98,900	32,900	4,030	9300
3×100								104,000	141,000	47,000	5,380	9400
4×100								120,000	169,000	56,400	6,700	9500
5×100								143,000	212,000	70,500	8,050	9600
6×100								158,000	240,000	79,900	9,230	9700
7×100								180,000	282,000	94,000	10,500	9800
8×100								193,000	311,000	103,000	11,900	9900
9×100								214,000	353,000	117,000	13,000	91000

1N≒0.102kgf

※Maximum Rail Length (standard type only)

part number	Max. length
SV6	700mm

※Please contact NB for details.

www.bergab.ru Берг АБ bergab@ya.ru Тел. (495)-228-06-21, факс (495) 223-3071

www.bergab.ru Берг АБ bergab@ya.ru Тел. (495)-228-06-21, факс (495) 223-3071

SV TYPE
–SV12–

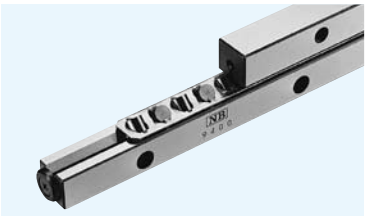

part number structure

example **SV 12 500 - 17Z - P**

- specification **SV**: standard
- size
- rail length
- number of rollers
- accuracy grade **blank**: high **P**: precision

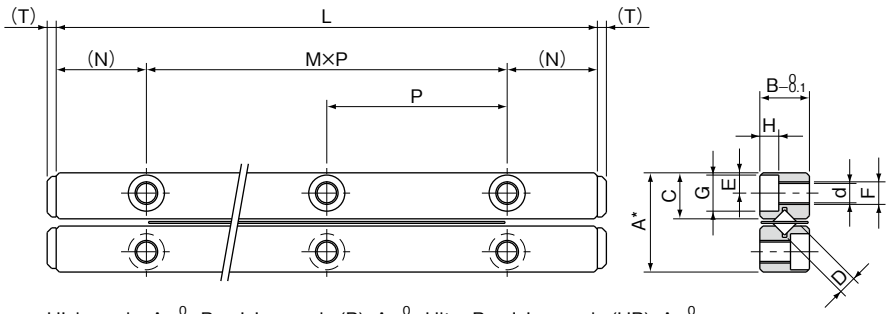

High grade: A-0.2 Precision grade (P): A-0.1 Ultra Precision grade (UP): A-0.1
One set consists of 4 rails, 2 roller cages, and 8 end pieces.

part number standard	part number anti-corrosion	stroke ST mm	roller diameter D mm	number of rollers Z	L mm	A mm	B mm	C mm
SV12300-10Z	—	200	12	10	300	58	28	27
12400-14Z	—	240		14	400			
12500-17Z	—	320		17	500			
12600-21Z	—	360		21	600			
12700-24Z	—	440		24	700			
12800-28Z	—	480		28	800			
12900-31Z	—	560		31	900			
121000-34Z	—	640		34	1,000			
121100-38Z	—	680		38	1,100			
121200-42Z	—	720		42	1,200			

major dimensions M×P mm	N mm	E mm	F	d mm	G mm	H mm	T mm	basic load rating dynamic C N	static Co N	allowable load F N	mass g	size
2×100	50	12	M10	8.5	13.5	8.2	4	124,000	145,000	48,300	6,880	12300
3×100								162,000	203,000	67,600	9,090	12400
4×100								180,000	232,000	77,200	11,400	12500
5×100								214,000	290,000	96,600	13,700	12600
6×100								247,000	348,000	115,000	15,800	12700
7×100								279,000	406,000	135,000	18,200	12800
8×100								294,000	435,000	144,000	20,500	12900
9×100								324,000	493,000	164,000	22,800	121000
10×100								354,000	551,000	183,000	25,000	121100
11×100								382,000	609,000	202,000	27,300	121200

1N≒0.102kgf

www.bergab.ru Берг АБ bergab@ya.ru Тел. (495)-228-06-21, факс (495) 223-3071

www.bergab.ru Берг АБ bergab@ya.ru Тел. (495)-228-06-21, факс (495) 223-3071

SVW TYPE

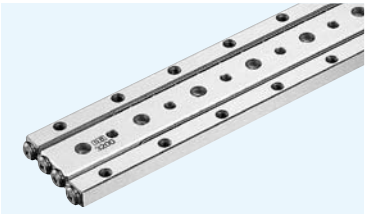

part number structure

example **SVWS 4 200-RAS 19Z-UP**

- specification
  - **SVW**: standard
  - **SVWS**: anti-corrosion
- size
- rail length
- cage type
  - **blank**: standard cage
  - **RA**: aluminum cage standard roller
  - **RAS**: aluminum cage stainless steel roller
- number of rollers
- accuracy grade
  - **blank**: high
  - **P**: precision
  - **UP**: ultra precision

※Refer to page G-5 for information on cage types.

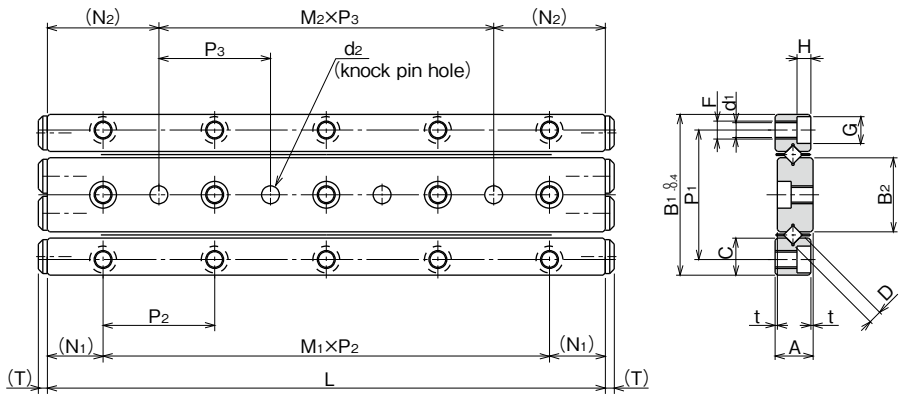

part number standard	part number anti-corrosion	stroke ST mm	roller diameter D mm	number of rollers Z	L mm	A mm	t mm	B_1 mm	B_2 mm	C mm	P_1 mm	$M_1 \times P_2$ mm
SVW 1020- 5Z	SVWS 1020- 5Z	12	1.5	5	20	4.5	0.5	17	7.6	3.8	13.4	1×10
1030- 7Z	1030- 7Z	20		7	30							2×10
1040-10Z	1040-10Z	27		10	40							3×10
1050-13Z	1050-13Z	32		13	50							4×10
1060-16Z	1060-16Z	37		16	60							5×10
1070-19Z	1070-19Z	42		19	70							6×10
1080-21Z	1080-21Z	50		21	80							7×10
SVW 2030- 5Z	SVWS 2030- 5Z	18	2	5	30	6.5	0.5	24	11	5.5	19	1×15
2045- 8Z	2045- 8Z	24		8	45							2×15
2060-11Z	2060-11Z	30		11	60							3×15
2075-13Z	2075-13Z	44		13	75							4×15
2090-16Z	2090-16Z	50		16	90							5×15
2105-18Z	2105-18Z	64		18	105							6×15
2120-21Z	2120-21Z	70		21	120							7×15
SVW 3050- 7Z	SVWS 3050- 7Z	28	3	7	50	8.5	0.5	36	16.6	8.3	29	1×25
3075-10Z	3075-10Z	48		10	75							2×25
3100-14Z	3100-14Z	58		14	100							3×25
3125-17Z	3125-17Z	78		17	125							4×25
3150-21Z	3150-21Z	88		21	150							5×25
3175-24Z	3175-24Z	105		24	175							6×25
3200-28Z	3200-28Z	115		28	200							7×25
SVW 4080- 7Z	SVWS 4080- 7Z	58	4	7	80	11.5	0.5	44	20.4	10.2	35	1×40
4120-11Z	4120-11Z	82		11	120							2×40
4160-15Z	4160-15Z	105		15	160							3×40
4200-19Z	4200-19Z	130		19	200							4×40
4240-23Z	4240-23Z	150		23	240							5×40
4280-27Z	4280-27Z	175		27	280							6×40

major dimensions N_1 mm	F	d_1 mm	G mm	H mm	$M_2 \times P_3$ mm	N_2 mm	d_2 mm	T mm	basic load rating dynamic C N	static Co N	allowable load F N	mass g	size
5	M2	1.65	3	1.4	—	10	$2^{+0.010}_{0}$	0.8	464	476	158	11	1020
					1×10				641	714	237	14	1030
					2×10				959	1,190	396	18	1040
					3×10				1,100	1,420	475	22	1050
					4×10				1,380	1,900	633	26	1060
					5×10				1,510	2,140	712	30	1070
					6×10				1,650	2,380	792	34	1080
7.5	M3	2.55	4.4	2	—	15	$3^{+0.010}_{0}$	2	1,090	1,170	390	28	2030
					1×15				1,900	2,340	780	42	2045
					2×15				2,270	2,930	976	55	2060
					3×15				2,620	3,510	1,170	69	2075
					4×15				3,280	4,680	1,560	83	2090
					5×15				3,590	5,270	1,750	96	2105
					6×15				3,900	5,860	1,950	110	2120
12.5	M4	3.3	6	3.1	—	25	$4^{+0.012}_{0}$	2	3,490	3,890	1,290	94	3050
					1×25				5,230	6,490	2,160	135	3075
					2×25				6,810	9,080	3,020	187	3100
					3×25				7,560	10,300	3,450	234	3125
					4×25				9,000	12,900	4,320	281	3150
					5×25				10,300	15,500	5,180	327	3175
					6×25				11,700	18,100	6,040	374	3200
20	M5	4.3	8	4.2	—	40	$5^{+0.012}_{0}$	2	7,110	7,920	2,640	255	4080
					1×40				10,600	13,200	4,400	385	4120
					2×40				13,800	18,400	6,160	510	4160
					3×40				16,800	23,700	7,920	635	4200
					4×40				19,700	29,000	9,680	770	4240
					5×40				22,400	34,300	11,400	905	4280

1N≒0.102kgf

www.bergab.ru Берг АБ bergab@ya.ru Тел. (495)-228-06-21, факс (495) 223-3071

www.bergab.ru Берг АБ bergab@ya.ru Тел. (495)-228-06-21, факс (495) 223-3071

SLIDE TABLE

The NB slide table is a precision table equipped with a slide way. Its high-precision and low-friction characteristics make it well suited for use in electronics automatic-assembly machines, optical measurement devices, etc.

STRUCTURE AND ADVANTAGES

The NB slide table consists of a slide way sandwiched between an accurately machined table and a bed. Stoppers are provided inside the table.

High Accuracy

The mounting surfaces of the table and bed are precision finished to ensure high precision linear motion, resulting in a high performance slide way.

Low Friction

Its non-recirculating mechanism provides stable motion at from low to high speeds.

Compact and High Rigidity

Being designed compactly, the NB slide table holds the high load capacity and high rigidity characteristics.

No Need for Adjustment

The table is carefully assembled so that the accuracy and preload are optimized, it can be used immediately without any further adjustment.

Ease of Mounting

Standardized mounting holes are provided in the table and bed. High precision linear motion can be achieved simply by mounting.

Figure G-16 Structure of NVT type

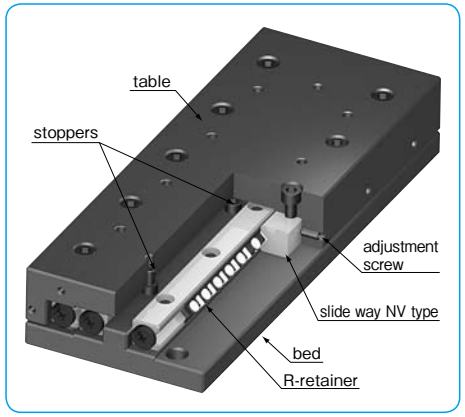

Figure G-17 Structure of SVT type

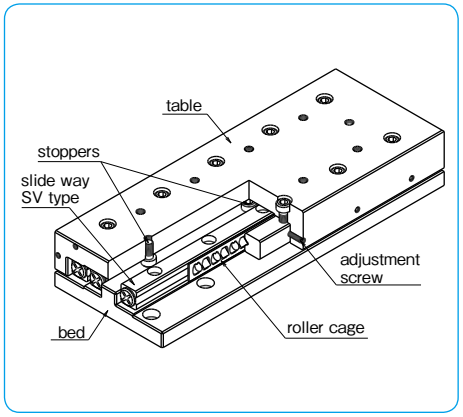

TYPES

NVT type

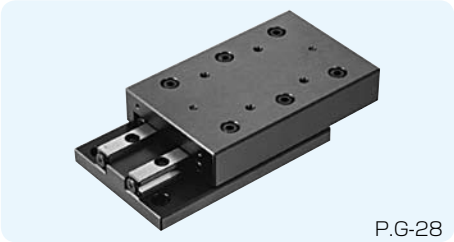

P.G-28

The NVT type slide table incorporates the NV type slide way. The table and bed have been precision machined to provide a high degree of accuracy and the product can be used, without any need for troublesome accuracy or preload adjustments.

SVT・SVTS type

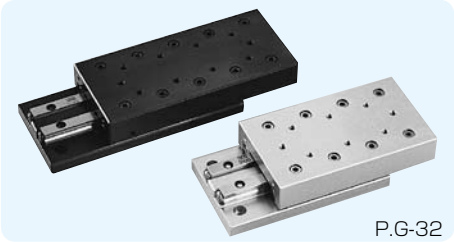

P.G-32

In the SVT type slide table, the SV type slide way is sandwiched between an accurately machined steel table and bed.
In the SVTS type, the anti-corrosion SVS type slide way is sandwiched between an accurately machined aluminum table and bed.

SYT・SYTS type

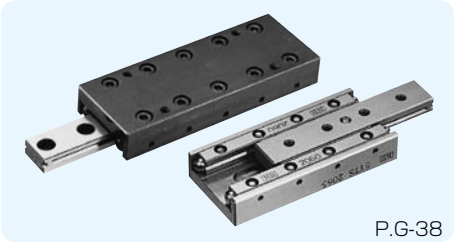

P.G-38

The SYT/SYTS type is a thin, compact slide table. Either tapped or counterbore type (D type) is available for the mounting hole.
The anti-corrosion SYTS type slide table is made of all stainless steel components, making it suitable for use in clean rooms.

ACCURACY

The motion accuracy of a slide table is measured by placing indicators at the center of the top and side surface of the table, as illustrated in Figure G-18.It is expressed in terms of the indicator deviation when the table is moved the full stroke without any load.

Figure G-18 Accuracy Measurement Method

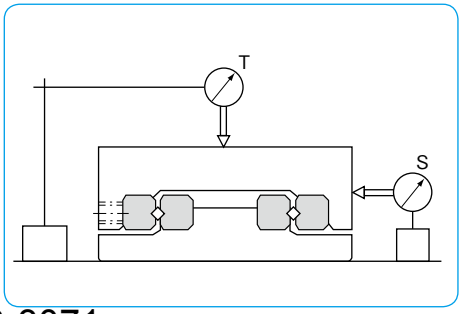

www.bergab.ru Берг АБ bergab@ya.ru Тел. (495)-228-06-21, факс (495) 223-3071

www.bergab.ru Берг АБ bergab@ya.ru Тел. (495)-228-06-21, факс (495) 223-3071

RATED LIFE

The life of an NB slide table is calculated using the following equations.

Rated Life

$$L=\left(\frac{f_T}{f_W}\cdot\frac{C}{P}\right)^{10/3}\cdot 50$$

L: rated life(km) f_T: temperature coefficient f_W: applied load coefficient
C: basic dynamic load rating(N) P: applied load(N)
※Please refer to page Eng-5 for the coefficients.

Life Time

$$L_h=\frac{L\cdot 10^3}{2\cdot \ell_S\cdot n_1\cdot 60}$$

L_h: life time (hr) ℓ_S: stroke length (m)
n_1: number of cycles per minute (cpm)

LOAD RATING

The load rating of the slide table NVT type differs depending on the direction of the load.

Table G-6 Change of Load Rating Corresponding to Load Direction

basic dynamic load rating	normal vertical direction	1.0×C
	horizontal direction	0.85×C
	reverse vertical direction	0.7×C
basic static load rating	normal vertical direction	1.0×C_0
	horizontal direction	0.85×C_0
	reverse vertical direction	0.7×C_0

※There may be a difference depending on the size.
Please contact NB for details.
Consideration has been given to holes for STUDROLLERs in the raceway surface in calculation of load ratings.

Figure G-19 Direction of Load

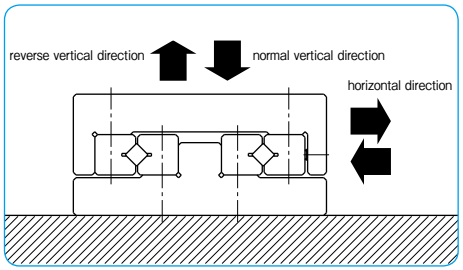

USE AND HANDLING PRECAUTIONS

Careful Handling

Dropping the slide table causes the rolling elements to make dents in the raceway surface. This will prevent smooth motion and will also affect accuracy. Be sure to handle the product with care.

Dust Prevention

Dust and foreign particles affect the accuracy and lifetime of a slide table. A slide table used in a harsh environment should be protected with a cover.

Lubrication

The slide table is prelubricated with lithium soap based grease prior to shipment for immediate use. Make sure to relubricate with a similar type of grease periodically depending on the operating conditions.

Cage Slippage

The cage can slip under high-speed motion, unbalanced-loading, and vibrating conditions. It is suggested that the motion speed of a slide table be kept under 30 m/min under general operating conditions.
It is recommended that the table be cycled to perform maximum full stroke several times during operation. This will allow the roller cage to be returned to its normal central position.

Adjustment/Installation Screw

The NB slide table is adjusted to achieve optimum accuracy and preload. The adjustment screw and rail installation screws should be kept untouched.

Allowable Load

The allowable load is a load under which the sum of elastic deformations of the rolling element and the raceway in the contact area subject to the maximum contact stress is small enough to guarantee smooth rolling movement. When very smooth and highly accurate linear motion is required, make sure to use the product within the allowable load.

SPECIAL REQUIREMENTS

NB can machine tables to meet special requirements, including tables with a micrometer head and tables for projectors. Please contact NB for details.

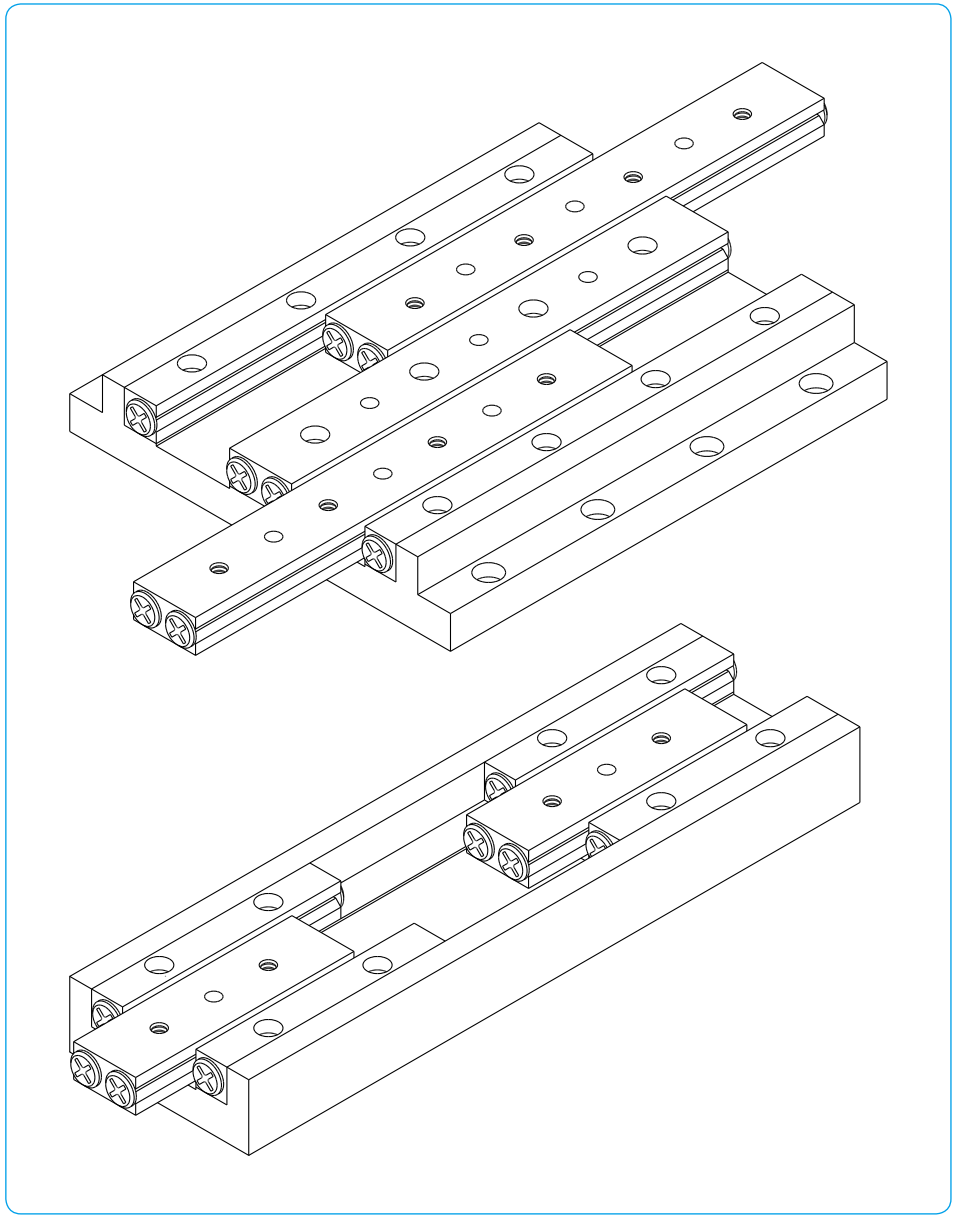

www.bergab.ru Берг АБ bergab@ya.ru Тел. (495)-228-06-21, факс (495) 223-3071

www.bergab.ru Берг АБ bergab@ya.ru Тел. (495)-228-06-21, факс (495) 223-3071

NVT TYPE
−NVT2／NVT3／NVT4−

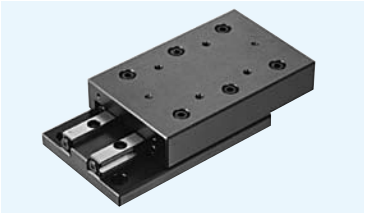

part number structure

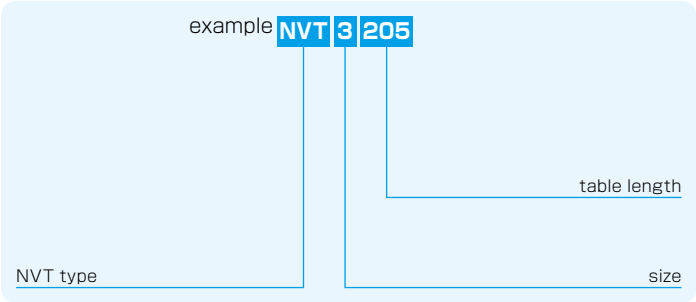

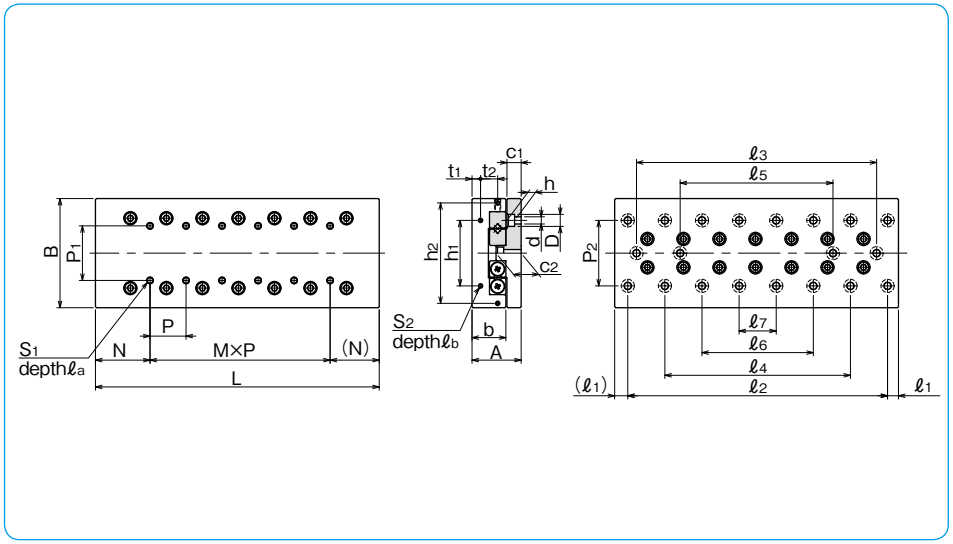

part number	stroke ST mm	major dimensions A mm	B mm	L mm	b mm	table-top mounting hole dimensions P1 mm	S1	ℓa mm	N mm	M×P mm	table-end mounting hole dimensions h1 mm	h2 mm	t1 mm	t2 mm	S2	ℓb mm	P2 mm	d×D×h mm
NVT2035	18			35						—								
2050	30			50						1×15								
2065	40			65						2×15								
2080	50			80						3×15								
2095	60			95						4×15								
2110	70	$21^{\pm0.1}$	$40^{-0.2}_{-0.4}$	110	14	15	M3	6	17.5	5×15	16	—	3.4	—	M2	6	30	3.5×6.5×3.5
2125	80			125						6×15								
2140	90			140						7×15								
2155	100			155						8×15								
2170	110			170						9×15								
2185	120			185						10×15								
NVT3055	30			55						—								
3080	45			80						1×25								
3105	60			105						2×25								
3130	75			130						3×25								
3155	90	$28^{\pm0.1}$	$60^{\pm0.1}$	155	18.5	25	M4	8	27.5	4×25	40	—	5.5	—	M3	6	40	4.5×8×4.5
3180	105			180						5×25								
3205	130			205						6×25								
3230	155			230						7×25								
NVT4085	50			85						—								
4125	75			125						1×40								
4165	105			165						2×40								
4205	130	$35^{\pm0.1}$	$80^{\pm0.1}$	205	24	40	M5	10	42.5	3×40	55	—	6.5	—	M3	6	55	5.5×10×5.4
4245	155			245						4×40								
4285	185			285						5×40								

The basic static load rating is the value at the center of the stroke.

bed-surface mounting hole dimensions c1 mm	c2 mm	ℓ1 mm	ℓ2 mm	ℓ3 mm	ℓ4 mm	ℓ5 mm	ℓ6 mm	ℓ7 mm	accuracy ※(deviation) T μm	S μm	basic load rating dynamic C N	static Co N	allowable load F N	allowable static moment MP N・m	MY N・m	MR N・m	mass g	size
			25	—	—	—	—	—	2	4	1,360	1,520	509	10.1	8.8	13.7	200	2035
			40	—	—	—	—	—	2	4	2,330	3,050	1,010	18.9	18.7	21.1	287	2050
			55	—	—	—	—	—	2	5	3,190	4,580	1,520	36.9	35.7	34.8	377	2065
			70	—	40	—	—	—	2	5	3,990	6,110	2,030	53.2	53.8	39.8	455	2080
			85	—	55	—	—	—	2	5	4,740	7,630	2,540	80.3	79.9	53.5	550	2095
6.5	10.9	5	100	—	70	—	—	—	3	6	5,460	9,160	3,050	104	106	58.4	640	2110
			115	—	85	—	—	—	3	6	6,160	10,600	3,560	130	135	63.4	730	2125
			130	—	100	—	70	—	3	6	6,830	12,200	4,070	171	176	77.1	810	2140
			145	—	115	—	85	—	3	6	8,130	15,200	5,090	235	244	90.9	890	2155
			160	—	130	—	100	—	3	7	8,750	16,800	5,600	275	289	95.8	980	2170
			175	—	145	—	115	85	3	7	9,370	18,300	6,110	317	338	100	1,070	2185
			35	—	—	—	—	—	2	5	6,150	8,060	2,680	13.3	34	21.2	643	3055
			60	—	—	—	—	—	2	5	8,440	12,100	4,030	122	117	134	960	3080
			85	—	—	—	—	—	3	6	10,500	16,100	5,370	178	181	148	1,260	3105
			110	—	—	—	—	—	3	6	14,400	24,200	8,060	275	310	162	1,580	3130
9	15	10	135	85	—	—	—	—	3	6	16,300	28,200	9,410	492	497	275	1,860	3155
			160	110	—	—	—	—	3	7	18,100	32,200	10,700	602	622	289	2,160	3180
			185	135	85	—	—	—	3	7	19,800	36,300	12,100	719	758	303	2,460	3205
			210	160	110	—	—	—	3	7	21,500	40,300	13,400	906	941	360	2,780	3230
			65	—	—	—	—	—	2	5	12,100	15,700	5,250	150	144	250	1,710	4085
			105	—	—	—	—	—	3	6	20,700	31,500	10,500	311	350	312	2,520	4125
			145	—	—	—	—	—	3	7	24,700	39,300	13,100	631	647	532	3,320	4165
10.5	18	10	185	105	—	—	—	—	3	7	32,100	55,100	18,300	1,250	1,240	847	4,130	4205
			225	145	—	—	—	—	3	7	39,000	70,900	23,600	1,700	1,770	909	4,930	4245
			265	185	—	—	—	—	3	7	42,400	78,700	26,200	2,330	2,380	1,120	5,730	4285

※For accuracy (T, S), refer to Figure G-18 (page G-25).

1N≒0.102kgf 1N・m≒0.102kgf・m

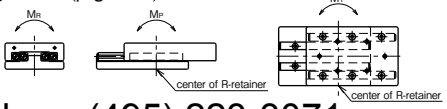

www.bergab.ru Берг АБ bergab@ya.ru Тел. (495)-228-06-21, факс (495) 223-3071

www.bergab.ru Берг АБ bergab@ya.ru Тел. (495)-228-06-21, факс (495) 223-3071

NVT TYPE
−NVT6／NVT9−

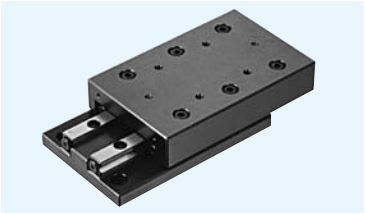

part number structure

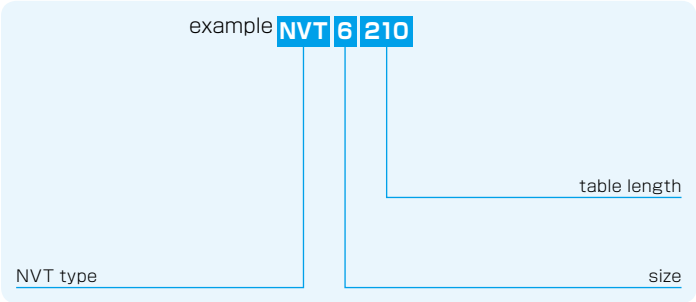

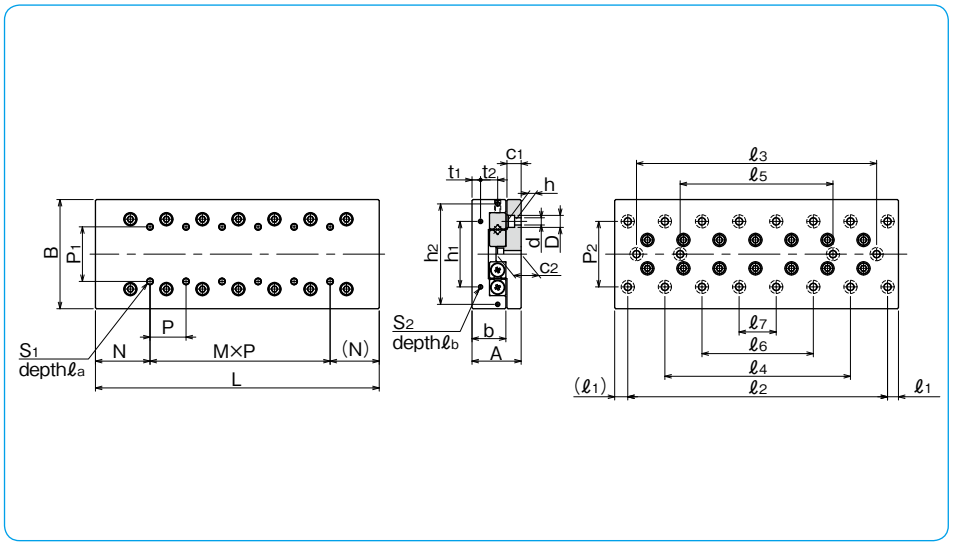

part number	stroke ST mm	major dimensions A mm	B mm	L mm	b mm	table-top mounting hole dimensions P1 mm	S1	ℓa mm	N mm	M×P mm	table-end mounting hole dimensions h1 mm	h2 mm	t1 mm	t2 mm	S2	ℓb mm	P2 mm	d×D×h mm
NVT6110	60			110						—								
6160	95			160						1×50								
6210	130			210						2×50								
6260	165	$45^{\pm0.1}$	$100^{\pm0.1}$	260	31	50	M6	12	55	3×50	60	92	8	15	M4	8	60	7×11.5×7
6310	200			310						4×50								
6360	235			360						5×50								
6410	265			410						6×50								
NVT9210	130			210						—								
9310	180	$60^{\pm0.1}$	$145^{\pm0.1}$	310	43	85	M8	16	105	1×100	90	135	11	20	M4	8	90	9×14×9
9410	220			410						2×100								
9510	300			510						3×100								

The basic static load rating is the value at the center of the stroke.

bed-surface mounting hole dimensions c1 mm	c2 mm	ℓ1 mm	ℓ2 mm	ℓ3 mm	ℓ4 mm	ℓ5 mm	ℓ6 mm	ℓ7 mm	accuracy ※(deviation) T μm	S μm	basic load rating dynamic C N	static Co N	allowable load F N	allowable static moment MP N・m	MY N・m	MR N・m	mass g	size
			90	—	—	—	—	—	3	6	29,600	37,500	12,500	216	303	343	3,300	6110
			140	—	—	—	—	—	3	6	40,700	56,300	18,700	937	927	995	4,850	6160
			190	90	—	—	—	—	3	7	60,600	93,900	31,300	1,950	1,980	1,410	6,310	6210
13	23	10	240	140	—	—	—	—	3	7	69,800	112,000	37,500	2,670	2,770	1,640	7,790	6260
			290	190	—	—	—	—	3	7	78,800	131,000	43,800	4,460	4,410	2,490	9,260	6310
			340	240	140	—	—	—	4	8	87,400	150,000	50,100	5,570	5,580	2,720	10,900	6360
			390	290	190	—	—	—	4	8	104,000	187,000	62,600	7,440	7,660	2,950	12,460	6410
			100	—	—	—	—	—	3	6	96,000	128,000	42,600	1,700	2,110	2,260	12,550	9210
16	29	55	200	—	—	—	—	—	3	6	143,000	213,000	71,100	6,560	6,580	5,330	18,000	9310
			300	100	—	—	—	—	3	7	186,000	298,000	99,500	12,600	12,700	7,770	24,010	9410
			400	200	—	—	—	—	3	7	206,000	341,000	113,000	18,700	18,600	10,200	30,100	9510

※For accuracy (T, S), refer to Figure G-18 (page G-25).

1N≒0.102kgf 1N・m≒0.102kgf・m

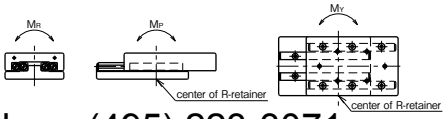

www.bergab.ru Берг АБ bergab@ya.ru Тел. (495)-228-06-21, факс (495) 223-3071

www.bergab.ru Берг АБ bergab@ya.ru Тел. (495)-228-06-21, факс (495) 223-3071

SVT TYPE
−SVT1/SVT2−

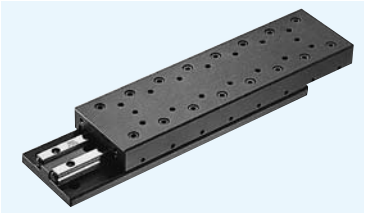

part number structure

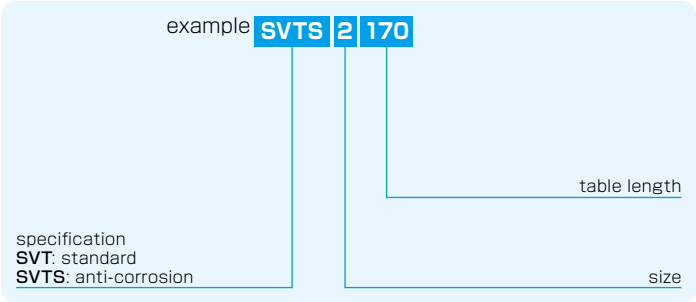

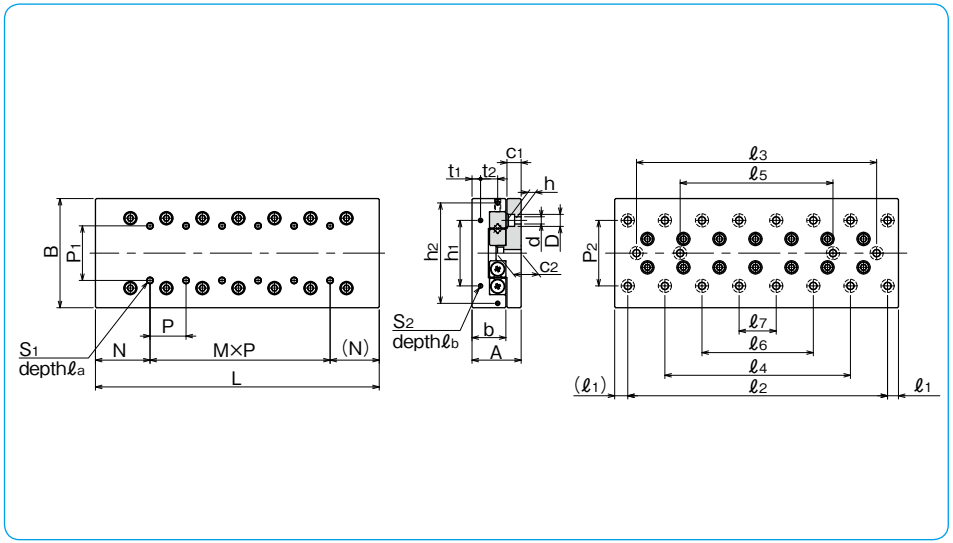

part number standard	part number anti-corrosion	stroke ST mm	major dimensions A mm	B mm	L mm	b mm	table-top mounting hole dimensions P1 mm	S1	ℓa mm	N mm	M×P mm	table-end mounting hole dimensions h1 mm	h2 mm	t1 mm	t2 mm	S2	ℓb mm
SVT 1025	SVTS 1025	12			25						—						
1035	1035	18			35						1×10						
1045	1045	25			45						2×10						
1055	1055	32	$17^{\pm0.1}$	$30^{-0.2}_{-0.4}$	55	11	10	M2	4	12.5	3×10	12	—	2.5	—	M2	6
1065	1065	40			65						4×10						
1075	1075	45			75						5×10						
1085	1085	50			85						6×10						
SVT 2035	SVTS 2035	18			35						—						
2050	2050	30			50						1×15						
2065	2065	40			65						2×15						
2080	2080	50			80						3×15						
2095	2095	60			95						4×15						
2110	2110	70	$21^{\pm0.1}$	$40^{-0.2}_{-0.4}$	110	14	15	M3	6	17.5	5×15	16	—	3.4	—	M2	6
2125	2125	80			125						6×15						
2140	2140	90			140						7×15						
2155	2155	100			155						8×15						
2170	2170	110			170						9×15						
2185	2185	120			185						10×15						

bed-surface mounting hole dimensions P2 mm	d×D×h mm	c1 mm	c2 mm	ℓ1 mm	ℓ2 mm	ℓ3 mm	ℓ4 mm	ℓ5 mm	ℓ6 mm	ℓ7 mm	accuracy ※(deviation) T μm	S μm	basic load rating dynamic C N	static Co N	allowable load F N	allowable static moment MP N・m	MY N・m	MR N・m	mass SVT g	SVTS g	size
					18	—	—	—	—	—	2	4	464	476	158	1.79	1.47	3.22	82	36	1025
					28	—	—	—	—	—	2	4	805	952	316	3.08	3.5	6.45	120	50	1035
					38	—	—	—	—	—	2	4	959	1,190	396	6.98	6.4	8.06	158	69	1045
22	2.5×4.5×2.5	5.5	9	3.5	48	—	28	—	—	—	2	5	1,100	1,420	475	9.53	8.81	9.68	190	83	1055
					58	—	38	—	—	—	2	5	1,240	1,660	554	12.4	11.6	11.2	225	98	1065
					68	—	48	—	—	—	2	5	1,510	2,140	712	19.3	18.3	14.5	260	113	1075
					78	—	58	—	—	—	2	5	1.650	2,380	792	23.4	22.3	16.1	295	128	1085
					25	—	—	—	—	—	2	4	1,090	1,170	390	7.04	5.78	10.5	195	90	2035
					40	—	—	—	—	—	2	4	1,510	1,750	585	12.1	10.7	15.8	280	133	2050
					55	—	—	—	—	—	2	5	1,900	2,340	780	19.1	17.1	21.1	370	175	2065
					70	—	40	—	—	—	2	5	2,620	3,510	1,170	27.4	29.6	31.6	450	220	2080
					85	—	55	—	—	—	2	5	2,950	4,100	1,360	37.4	39.9	36.9	540	250	2095
30	3.5×6.5×3.5	6.5	10.9	5	100	—	70	—	—	—	3	6	3,280	4,680	1,560	61.7	58.1	42.2	630	285	2110
					115	—	85	—	—	—	3	6	3,590	5,270	1,750	76.1	72.1	47.5	720	330	2125
					130	—	100	—	70	—	3	6	4,210	6,440	2,140	92	95.9	58.1	800	360	2140
					145	—	115	—	85	—	3	6	4,500	7,030	2,340	109	113	63.3	880	400	2155
					160	—	130	—	100	—	3	7	4,790	7,610	2,530	148	143	68.6	970	440	2170
					175	—	145	—	115	85	3	7	5,080	8,200	2,730	170	164	73.9	1,060	480	2185

※For accuracy (T, S), refer to Figure G-18 (page G-25).

1N≒0.102kgf 1N・m≒0.102kgf・m

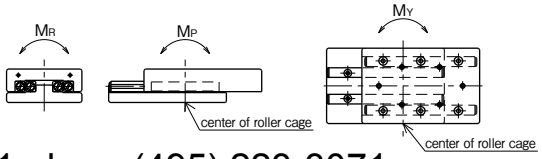

www.bergab.ru Берг АБ bergab@ya.ru Тел. (495)-228-06-21, факс (495) 223-3071

www.bergab.ru Берг АБ bergab@ya.ru Тел. (495)-228-06-21, факс (495) 223-3071

SVT TYPE
−SVT3/SVT4−

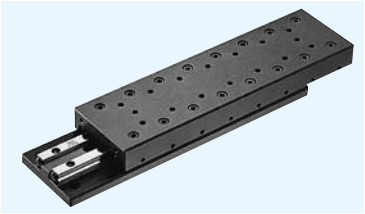

part number structure

example **SVTS 4 205**

- table length
- size
- specification
  - **SVT**: standard
  - **SVTS**: anti-corrosion

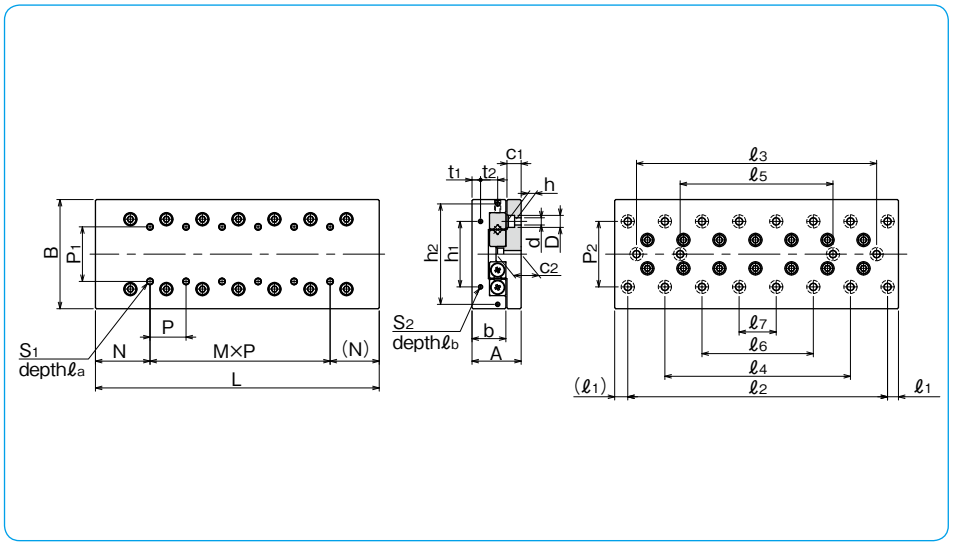

part number standard	part number anti-corrosion	stroke ST mm	major dimensions A mm	major dimensions B mm	major dimensions L mm	major dimensions b mm	table-top mounting hole dimensions P1 mm	table-top mounting hole dimensions S1	table-top mounting hole dimensions ℓa mm	table-top mounting hole dimensions N mm	table-top mounting hole dimensions M×P mm	table-end mounting hole dimensions h1 mm	table-end mounting hole dimensions h2 mm	table-end mounting hole dimensions t1 mm	table-end mounting hole dimensions t2 mm	table-end mounting hole dimensions S2	table-end mounting hole dimensions ℓb mm
SVT 3055	**SVTS 3055**	30			55						—						
3080	**3080**	45			80						1×25						
3105	**3105**	60			105						2×25						
3130	**3130**	75			130						3×25						
3155	**3155**	90	$28^{\pm0.1}$	$60^{\pm0.1}$	155	18.5	25	M4	8	27.5	4×25	40	—	5.5	—	M3	6
3180	**3180**	105			180						5×25						
3205	**3205**	130			205						6×25						
3230	**3230**	155			230						7×25						
3255	**3255**	180			255						8×25						
3280	**3280**	205			280						9×25						
3305	**3305**	230			305						10×25						
SVT 4085	**SVTS 4085**	50			85						—						
4125	**4125**	75			125						1×40						
4165	**4165**	105			165						2×40						
4205	**4205**	130			205						3×40						
4245	**4245**	155	$35^{\pm0.1}$	$80^{\pm0.1}$	245	24	40	M5	10	42.5	4×40	55	—	6.5	—	M3	6
4285	**4285**	185			285						5×40						
4325	**4325**	210			325						6×40						
4365	**4365**	235			365						7×40						
4405	**4405**	265			405						8×40						

bed-surface mounting hole dimensions P2 mm	d×D×h mm	c1 mm	c2 mm	ℓ1 mm	ℓ2 mm	ℓ3 mm	ℓ4 mm	ℓ5 mm	ℓ6 mm	ℓ7 mm	accuracy ※(deviation) T μm	accuracy ※(deviation) S μm	basic load rating dynamic C N	basic load rating static Co N	allowable load F N	allowable static moment MP N・m	allowable static moment MY N・m	allowable static moment MR N・m	mass SVT g	mass SVTS g	size
					35	—	—	—	—	—	2	5	3,490	3,890	1,290	19.4	22.2	54.5	640	300	**3055**
					60	—	—	—	—	—	2	5	5,230	6,490	2,160	53.0	58.0	90.9	955	440	**3080**
					85	—	—	—	—	—	3	6	6,030	7,780	2,590	103	95.7	109	1,250	580	**3105**
					110	—	—	—	—	—	3	6	7,560	10,300	3,450	170	160	145	1,570	715	**3130**
40	4.5×8×4.5	9	15	10	135	85	—	—	—	—	3	6	9,000	12,900	4,320	210	220	181	1,850	850	**3155**
					160	110	—	—	—	—	3	7	10,300	15,500	5,180	302	314	218	2,150	990	**3180**
					185	135	85	—	—	—	3	7	11,000	16,800	5,610	355	367	236	2,450	1,130	**3205**
					210	160	110	—	—	—	3	7	11,700	18,100	6,040	472	455	254	2,740	1,270	**3230**
					235	185	135	—	—	—	3	7	12,900	20,700	6,910	537	552	290	3,040	1,410	**3255**
					260	210	160	110	—	—	3	7	13,600	22,000	7,340	606	622	309	3,360	1,540	**3280**
					285	235	185	135	—	—	3	7	14,200	23,300	7,770	757	735	372	3,660	1,680	**3305**
					65	—	—	—	—	—	2	5	7,110	7,920	2,640	96.0	84.9	159	1,700	780	**4085**
					105	—	—	—	—	—	3	6	10,600	13,200	4,400	217	199	265	2,500	1,140	**4125**
					145	—	—	—	—	—	3	7	13,800	18,400	6,160	296	316	371	3,300	1,510	**4165**
					185	105	—	—	—	—	3	7	16,800	23,700	7,920	488	513	477	4,100	1,870	**4205**
55	5.5×10×5.4	10.5	18	10	225	145	—	—	—	—	3	7	19,700	29,000	9,680	729	759	584	4,900	2,240	**4245**
					265	185	—	—	—	—	3	7	22,400	34,300	11,400	1,010	1,050	690	5,700	2,600	**4285**
					305	225	145	—	—	—	4	8	25,100	39,600	13,200	1,350	1,390	796	6,500	3,000	**4325**
					345	265	185	—	—	—	4	8	27,600	44,800	14,900	1,730	1,780	902	7,300	3,300	**4365**
					385	305	225	—	—	—	4	8	28,900	47,500	15,800	2,160	2,100	955	8,100	3,700	**4405**

※For accuracy (T, S), refer to Figure G-18 (page G-25).

1N≒0.102kgf 1N・m≒0.102kgf・m

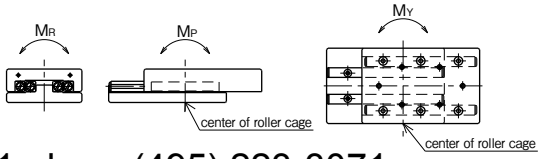

www.bergab.ru Берг АБ bergab@ya.ru Тел. (495)-228-06-21, факс (495) 223-3071

www.bergab.ru Берг АБ bergab@ya.ru Тел. (495)-228-06-21, факс (495) 223-3071

SVT TYPE
−SVT6／SVT9−

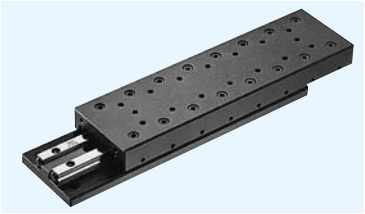

part number structure

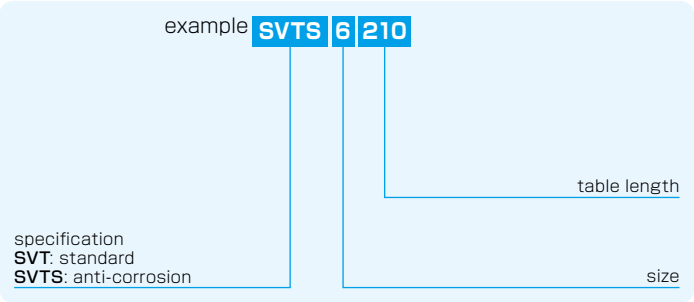

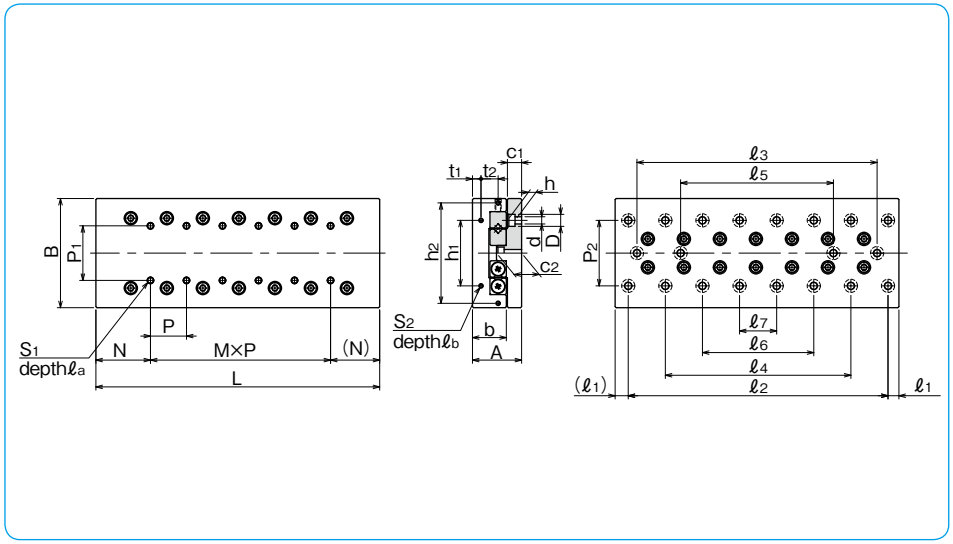

part number standard	part number anti-corrosion	stroke ST mm	major dimensions A mm	B mm	L mm	b mm	table-top mounting hole dimensions P1 mm	S1	ℓa mm	N mm	M×P mm	table-end mounting hole dimensions h1 mm	h2 mm	t1 mm	t2 mm	S2	ℓb mm
SVT 6110	SVTS 6110	60			110						—						
6160	6160	95			160						1×50						
6210	6210	130			210						2×50						
6260	6260	165			260						3×50						
6310	6310	200	$45^{\pm0.1}$	$100^{\pm0.1}$	310	31	50	M6	12	55	4×50	60	92	8	15	M4	8
6360	6360	235			360						5×50						
6410	6410	265			410						6×50						
6460	6460	300			460						7×50						
6510	6510	335			510						8×50						
SVT 9210	—	130			210						—						
9310	—	180			310						1×100						
9410	—	350			410						2×100						
9510	—	450			510						3×100						
9610	—	550	$60^{\pm0.1}$	$145^{\pm0.1}$	610	43	85	M8	16	105	4×100	90	135	11	20	M4	8
9710	—	650			710						5×100						
9810	—	750			810						6×100						
9910	—	850			910						7×100						
91010	—	950			1,010						8×100						

bed-surface mounting hole dimensions P2 mm	d×D×h mm	c1 mm	c2 mm	ℓ1 mm	ℓ2 mm	ℓ3 mm	ℓ4 mm	ℓ5 mm	ℓ6 mm	ℓ7 mm	accuracy ※(deviation) T μm	S μm	basic load rating dynamic C N	static Co N	allowable load F N	allowable static moment MP N・m	MY N・m	MR N・m	mass SVT g	SVTS g	size
					90	—	—	—	—	—	3	6	16,500	17,700	5,910	260	230	400	3,280	1,705	6110
					140	—	—	—	—	—	3	6	24,700	29,600	9,860	588	539	666	4,820	2,480	6160
					190	90	—	—	—	—	3	7	32,200	41,400	13,800	1,040	978	933	6,270	3,255	6210
					240	140	—	—	—	—	3	7	39,200	53,200	17,700	1,630	1,540	1,200	7,740	4,030	6260
60	7×11.5×7	13	23	10	290	190	—	—	—	—	3	7	45,800	65,100	21,600	2,340	2,240	1,460	9,200	4,805	6310
					340	240	140	—	—	—	4	8	52,200	76,900	25,600	2,750	2,850	1,730	10,740	5,580	6360
					390	290	190	—	—	—	4	8	58,400	88,800	29,500	3,660	3,770	2,000	12,190	6,355	6410
					440	340	240	—	—	—	4	8	64,400	100,000	33,500	4,700	4,830	2,260	13,800	7,130	6460
					490	390	290	190	—	—	4	8	70,200	112,000	37,400	5,870	6,010	2,530	15,300	7,905	6510
					100	—	—	—	—	—	3	7	51,100	56,500	18,800	1,610	1,440	2,030	12,520	—	9210
					200	—	—	—	—	—	3	7	79,300	98,900	32,900	3,150	3,360	3,560	17,950	—	9310
					300	100	—	—	—	—	4	8	79,300	98,900	32,900	4,110	3,840	3,560	23,950	—	9410
					400	200	—	—	—	—	4	8	96,600	127,000	42,300	6,420	6,080	4,580	30,090	—	9510
90	9×14×9	16	29	55	500	300	100	—	—	—	4	9	112,000	155,000	51,700	7,760	8,090	5,600	35,990	—	9610
					600	400	200	—	—	—	4	9	128,000	183,000	61,100	10,800	11,200	6,620	41,890	—	9710
					700	500	300	100	—	—	5	10	136,000	197,000	65,800	14,400	13,900	7,130	47,790	—	9810
					800	600	400	200	—	—	5	10	151,000	226,000	75,200	18,500	17,900	8,140	53,690	—	9910
					900	700	500	300	100	—	5	10	165,000	254,000	84,600	23,100	22,400	9,160	59,590	—	91010

※For accuracy (T, S), refer to Figure G-18 (page G-25).

1N≒0.102kgf 1N・m≒0.102kgf・m

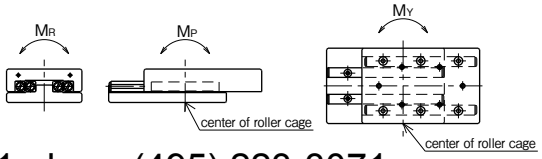

www.bergab.ru Берг АБ bergab@ya.ru Тел. (495)-228-06-21, факс (495) 223-3071

www.bergab.ru Берг АБ bergab@ya.ru Тел. (495)-228-06-21, факс (495) 223-3071

SYT TYPE
−SYT1/SYT2−

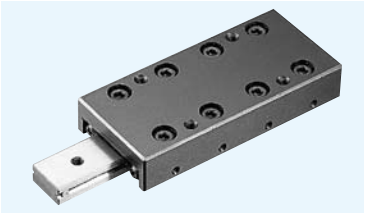

part number structure

example **SYTS 2 110**

- 110 — table length
- 2 — size
- SYTS — specification
  - SVT: standard
  - SVTS: anti-corrosion

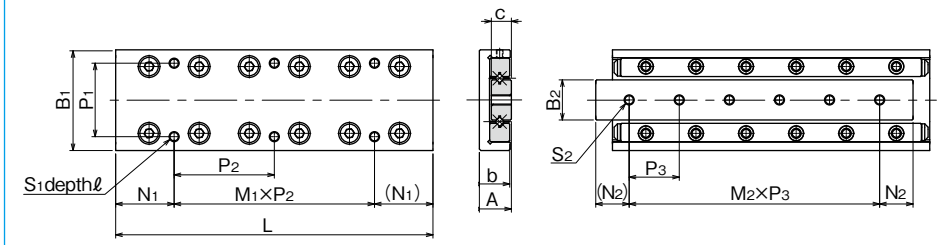

part number standard	part number anti-corrosion	stroke ST mm	A mm	B1 mm	L mm	b mm	B2 mm	c mm	P1 mm	S1	ℓ mm
SYT 1025	SYTS 1025	12	8±0.1	20±0.1	25	7.5	6.6	4	14	M2.6	3
1035	1035	18			35						
1045	1045	25			45						
1055	1055	32			55						
1065	1065	40			65						
1075	1075	45			75						
1085	1085	50			85						
SYT 2035	SYTS 2035	18	12±0.1	30±0.1	35	11.5	12	6	22	M3	5
2050	2050	30			50						
2065	2065	40			65						
2080	2080	50			80						
2095	2095	60			95						
2110	2110	70			110						
2125	2125	80			125						

N1 mm	M1×P2 mm	S2	N2 mm	M2×P3 mm	accuracy ※(deviation) T μm	S μm	basic load rating dynamic C N	static Co N	allowable load F N	allowable static moment MP N・m	MY N・m	MR N・m	mass g	size
3.5	1×18	M2.6	5	2×7.5	2	4	464	476	158	1.79	1.47	1.79	22	1025
3.5	1×28		7.5	2×10	2	4	805	952	316	3.08	3.50	3.58	33	1035
12.5	1×20		7.5	3×10	2	5	959	1,190	396	6.98	6.40	4.48	42	1045
12.5	1×30		7.5	4×10	2	5	1,100	1,420	475	9.53	8.81	5.37	52	1055
12.5	2×20		7.5	5×10	2	5	1,240	1,660	554	12.4	11.6	6.27	63	1065
22.5	1×30		7.5	6×10	2	5	1,510	2,140	712	19.3	18.3	8.06	72	1075
12.5	2×30		7.5	7×10	2	5	1,650	2,380	792	23.4	22.3	8.96	83	1085
3.5	1×28	M3	7.5	1×20	2	4	1,090	1,170	390	7.04	5.78	7.63	79	2035
3.5	1×43		10	2×15	2	4	1,510	1,750	585	12.1	10.7	11.4	113	2050
17.5	1×30		10	3×15	2	5	1,900	2,340	780	19.1	17.1	15.2	150	2065
17.5	1×45		10	4×15	2	5	2,620	3,510	1,170	27.4	29.6	22.8	185	2080
17.5	2×30		10	5×15	2	5	2,950	4,100	1,360	37.4	39.9	26.7	215	2095
32.5	1×45		10	6×15	2	5	3,280	4,680	1,560	61.7	58.1	30.5	255	2110
17.5	2×45		10	7×15	2	5	3,590	5,270	1,750	76.1	72.1	34.3	295	2125

※For accuracy (T, S), refer to Figure G-18 (page G-25).

1N≒0.102kgf 1N・m≒0.102kgf・m

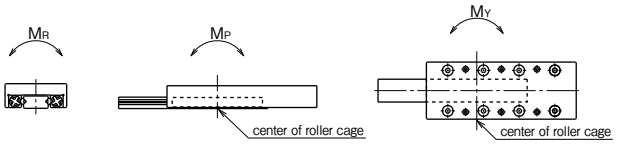

www.bergab.ru Берг АБ bergab@ya.ru Тел. (495)-228-06-21, факс (495) 223-3071

www.bergab.ru Берг АБ bergab@ya.ru Тел. (495)-228-06-21, факс (495) 223-3071

SYT TYPE
–SYT3–

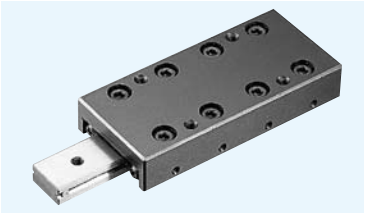

part number structure

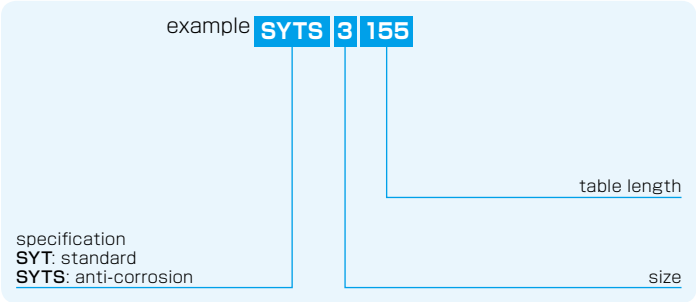

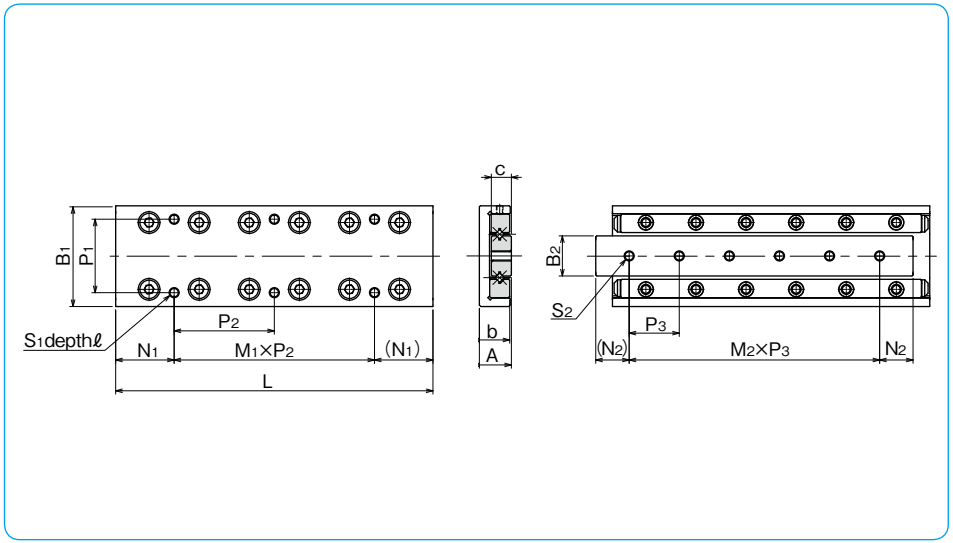

part number standard	part number anti-corrosion	stroke ST mm	A mm	B1 mm	L mm	b mm	B2 mm	c mm	table-top mounting hole dimensions P1 mm	S1	ℓ mm
SYT 3055	SYTS 3055	30	16±0.1	40±0.1	55	15.5	16	8	30	M4	7
3080	3080	45			80						
3105	3105	60			105						
3130	3130	75			130						
3155	3155	90			155						
3180	3180	105			180						
3205	3205	130			205						

N1 mm	M1×P2 mm	bed-surface mounting hole dimensions S2	N2 mm	M2×P3 mm	accuracy ※(deviation) T μm	S μm	basic load rating dynamic C N	static Co N	allowable load F N	allowable static moment MP N・m	MY N・m	MR N・m	mass g	size
7.5	1×40	M4	10	1×35	2	5	3,490	3,890	1,290	19.4	22.2	33.8	225	3055
7.5	1×65		15	2×25	2	5	5,230	6,490	2,160	53.0	58.0	56.4	340	3080
27.5	1×50		15	3×25	3	5	6,030	7,790	2,590	103	95.7	67.7	440	3105
27.5	1×75		15	4×25	3	5	7,560	10,300	3,450	170	160	90.3	560	3130
27.5	2×50		15	5×25	3	5	9,000	12,900	4,320	210	220	112	655	3155
52.5	1×75		15	6×25	3	5	10,300	15,500	5,180	302	314	135	770	3180
27.5	2×75		15	7×25	3	5	11,000	16,800	5,610	355	367	146	880	3205

※For accuracy (T, S), refer to Figure G-18 (page G-25).

1N≒0.102kgf 1N・m≒0.102kgf・m

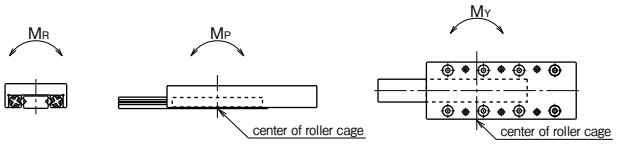

www.bergab.ru Берг АБ bergab@ya.ru Тел. (495)-228-06-21, факс (495) 223-3071

www.bergab.ru Берг АБ bergab@ya.ru Тел. (495)-228-06-21, факс (495) 223-3071

SYT-D TYPE
−SYT1／SYT2−

part number structure

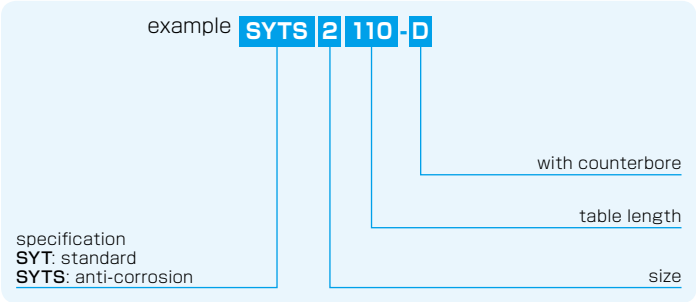

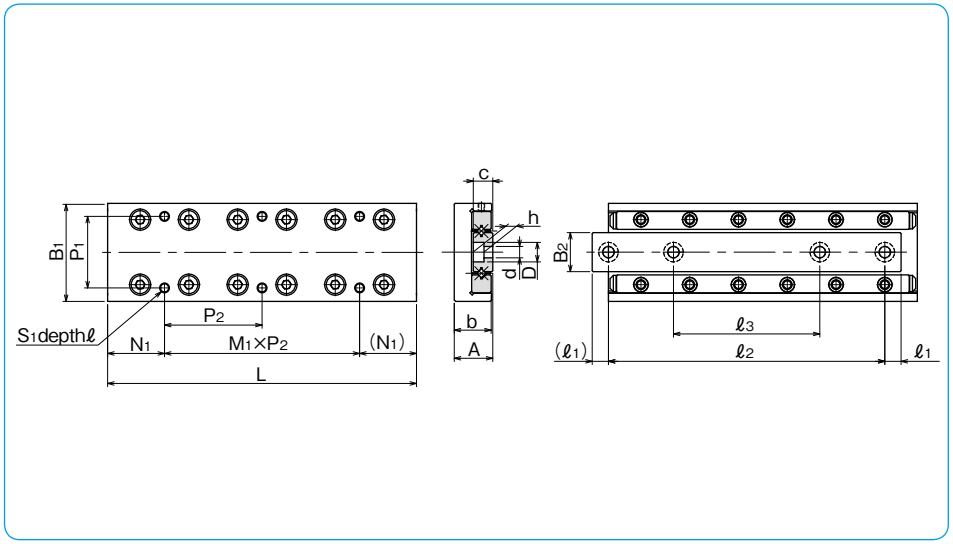

part number standard	part number anti-corrosion	stroke ST mm	major dimensions A mm	B1 mm	L mm	b mm	B2 mm	c mm	table-top mounting hole dimensions P1 mm	S1	ℓ mm	N1 mm
SYT1025-D	SYTS1025-D	12	8±0.1	20±0.1	25	7.5	6.6	4	14	M2.6	3	3.5
1035-D	1035-D	18			35							3.5
1045-D	1045-D	25			45							12.5
1055-D	1055-D	32			55							12.5
1065-D	1065-D	40			65							12.5
1075-D	1075-D	45			75							22.5
1085-D	1085-D	50			85							12.5
SYT2035-D	SYTS2035-D	18	12±0.1	30±0.1	35	11.5	12	6	22	M3	5	3.5
2050-D	2050-D	30			50							3.5
2065-D	2065-D	40			65							17.5
2080-D	2080-D	50			80							17.5
2095-D	2095-D	60			95							17.5
2110-D	2110-D	70			110							32.5
2125-D	2125-D	80			125							17.5

M1×P2 mm	bed-surface mounting hole dimensions d×D×h mm	ℓ1 mm	ℓ2 mm	ℓ3 mm	accuracy ※(deviation) T μm	S μm	basic load rating dynamic C N	static Co N	allowable load F N	allowable static moment MP N・m	MY N・m	MR N・m	mass g	size
1×18	2.5×4.1×2.2	3.5	18	—	2	4	464	476	158	1.79	1.47	1.79	22	1025
1×28		5	25	—	2	4	805	952	316	3.08	3.50	3.58	33	1035
1×20		3.5	38	25	2	5	959	1,190	396	6.98	6.40	4.48	42	1045
1×30		3.5	48	29	2	5	1,100	1,420	475	9.53	8.81	5.37	52	1055
2×20		5	55	31	2	5	1,240	1,660	554	12.4	11.6	6.27	63	1065
1×30		5	65	35	2	5	1,510	2,140	712	19.3	18.3	8.06	72	1075
2×30		5	75	40	2	5	1,650	2,380	792	23.4	22.3	8.96	83	1085
1×28	3.5×6×3.3	5	25	—	2	4	1,090	1,170	390	7.04	5.78	7.63	79	2035
1×43		7.5	35	—	2	4	1,510	1,750	585	12.1	10.7	11.4	113	2050
1×30		5	55	33	2	5	1,900	2,340	780	19.1	17.1	15.2	150	2065
1×45		5	70	40	2	5	2,620	3,510	1,170	27.4	29.6	22.8	185	2080
2×30		5	85	45	2	5	2,950	4,100	1,360	37.4	39.9	26.7	215	2095
1×45		7.5	95	50	2	5	3,280	4,680	1,560	61.7	58.1	30.5	255	2110
2×45		7.5	110	55	2	5	3,590	5,270	1,750	76.1	72.1	34.3	295	2125

※For accuracy (T, S), refer to Figure G-18 (page G-25).

1N≒0.102kgf 1N・m≒0.102kgf・m

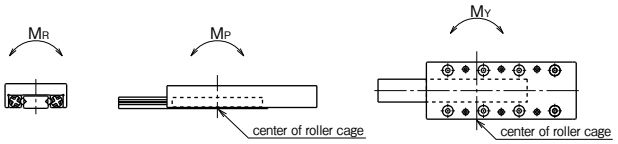

www.bergab.ru Берг АБ bergab@ya.ru Тел. (495)-228-06-21, факс (495) 223-3071

www.bergab.ru Берг АБ bergab@ya.ru Тел. (495)-228-06-21, факс (495) 223-3071

SYT-D TYPE
–SYT3–

part number structure

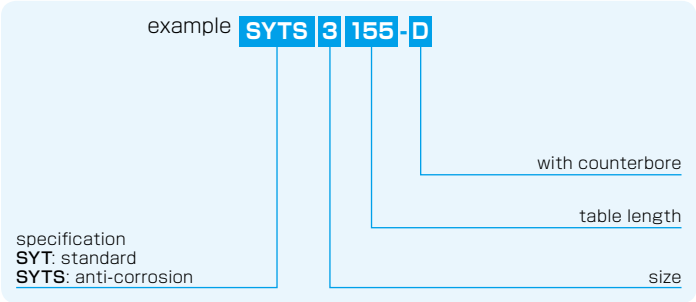

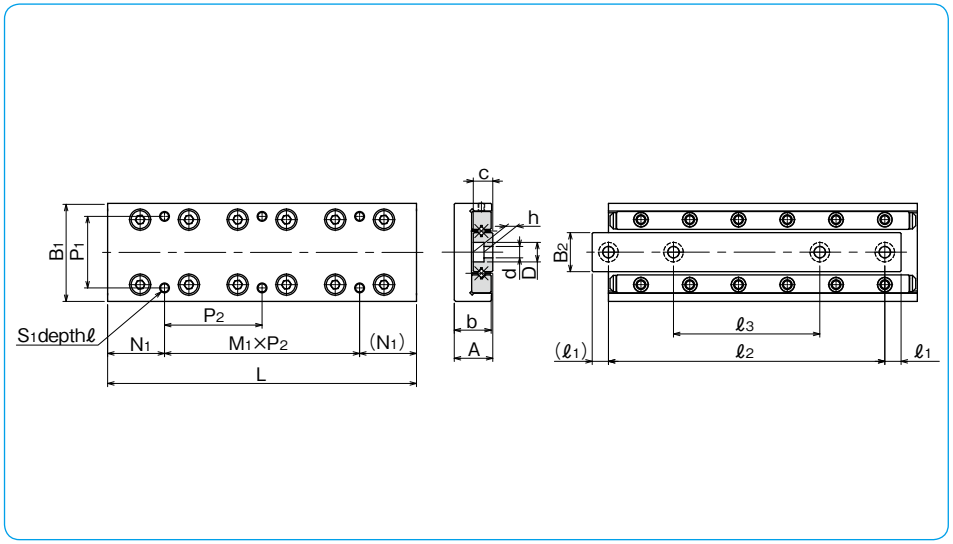

part number standard	part number anti-corrosion	stroke ST mm	major dimensions A mm	B1 mm	L mm	b mm	B2 mm	c mm	table-top mounting hole dimensions P1 mm	S1	ℓ mm	N1 mm
SYT3055-D	SYTS3055-D	30			55							7.5
3080-D	3080-D	45			80							7.5
3105-D	3105-D	60			105							27.5
3130-D	3130-D	75	$16^{\pm0.1}$	$40^{\pm0.1}$	130	15.5	16	8	30	M4	7	27.5
3155-D	3155-D	90			155							27.5
3180-D	3180-D	105			180							52.5
3205-D	3205-D	130			205							27.5

M1×P2 mm	bed-surface mounting hole dimensions d×D×h mm	ℓ1 mm	ℓ2 mm	ℓ3 mm	accuracy ※(deviation) T μm	S μm	basic load rating dynamic C N	static Co N	allowable load F N	allowable static moment MP N・m	MY N・m	MR N・m	mass g	size
1×40		7.5	40	—	2	5	3,490	3,890	1,290	19.4	22.2	33.8	225	3055
1×65		6	68	43	2	5	5,230	6,490	2,160	53.0	58.0	56.4	340	3080
1×50		7.5	90	55	3	5	6,030	7,780	2,590	103	95.7	67.7	440	3105
1×75	4.5×7.5×4.3	7.5	115	65	3	5	7,560	10,300	3,450	170	160	90.3	560	3130
2×50		7.5	140	95	3	5	9,000	12,900	4,320	210	220	112	655	3155
1×75		7.5	165	85	3	5	10,300	15,500	5,180	302	314	135	770	3180
2×75		7.5	190	90	3	5	11,000	16,800	5,610	355	367	146	880	3205

※For accuracy (T, S), refer to Figure G-18 (page G-25).

1N≒0.102kgf 1N・m≒0.102kgf・m

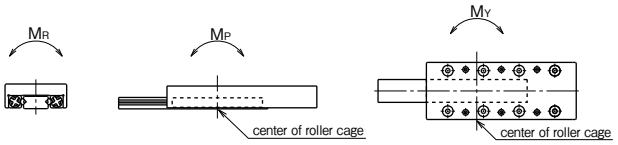

www.bergab.ru Берг АБ bergab@ya.ru Тел. (495)-228-06-21, факс (495) 223-3071

www.bergab.ru Берг АБ bergab@ya.ru Тел. (495)-228-06-21, факс (495) 223-3071

MINIATURE SLIDE

The NB miniature slide table SYBS type is a limited stroke table with the most compact envelope dimensions, featuring two ball raceway grooves. The SYBS type utilizes balls as the rolling elements. The ultra compact design contributes greatly to the creation of smaller and lighter industrial machinery and equipment of all types.

STRUCTURE AND ADVANTAGES

The NB miniature slide table incorporates a unique integrated ball cage between the table and bed. All components have been produced with high precision machining.

Ultra Compact Design

The table height of the SYBS type is 3.2～4.5mm and the width is 6～12mm. This compact size when compared with conventional slide tables helps to realize the miniaturization of machinery and equipment.

Low Friction ・ Low Noise

Since the rolling ball elements do not recirculate, the frictional resistance will not vary significantly resulting in smooth, high precision operation. Additionally, the ball cage greatly reduces the contact noise of the rolling elements bringing about a low-noise operation.

High Accuracy

The ball raceway grooves of each of the bed and table are processed through simultaneous precision machining resulting in minimal processing errors, and bringing about extremely smooth, precision linear movement.

Stainless Steel Structure

The SYBS type is made of all stainless steel components. This allows for use in corrosive or high temperature applications. The SYBS is a perfect component for vacuum or clean room environments.

Figure G-20 Structure of SYBS type

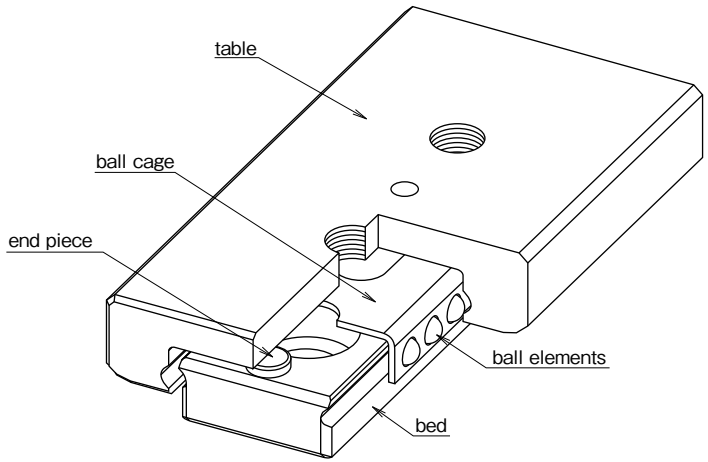

ACCURACY

Table G-7 shows the accuracy of the SYBS miniature slide table.
The deviation is measured as Figure G-21 illustrates. Dial indicators are placed to the center of the table's top and the reference surface side (opposite from the NB mark) and then the table is moved the full stroke without any load.

Table G-7 Accuracy unit／mm

item	tolerance
height H	±0.020
width W	±0.025
deviation from center of surface C	0.004
deviation from center of surface D	0.006

Figure G-21 Accuracy Measurement Method

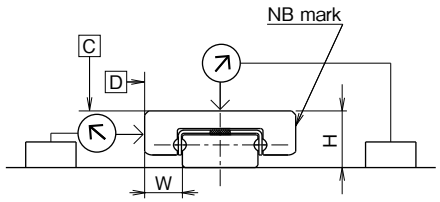

LOAD RATING

The load rating of the miniature slide table varies depending on the direction of the applied load.

Table G-8 Change of Load Rating Corresponding to Load Direction

basic dynamic load rating	vertical direction	1.00×C
	horizontal direction	1.13×C
basic static load rating	vertical direction	1.00×Co
	horizontal direction	1.19×Co

Figure G-22 Direction of Load

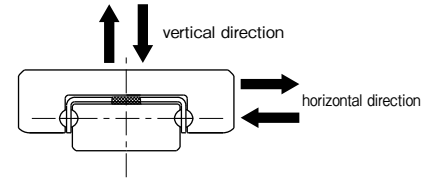

RATED LIFE

The life of an NB miniature slide table is calculated using the following equations:

Rated Life

$$L=\left(\frac{f_T}{f_W}\cdot\frac{C}{P}\right)^3\cdot 50$$

L: rated life (km) f_T: temperature coefficient
f_W: applied load coefficient C: basic dynamic load rating (N)
P: applied load (N)
* Refer to page Eng-5 for the coefficiens.

Life Time

$$L_h=\frac{L\cdot 10^3}{2\cdot \ell_s\cdot n_1\cdot 60}$$

L_h: life time (hr) ℓ_s: stroke length (m)
n_1: number of cycles per minute (cpm)

www.bergab.ru Берг АБ bergab@ya.ru Тел. (495)-228-06-21, факс (495) 223-3071

www.bergab.ru Берг АБ bergab@ya.ru Тел. (495)-228-06-21, факс (495) 223-3071

MOUNTING

Mounting Surface Profile

In most general installations, the miniature slide table is mounted by pushing the reference surface of the bed and table against a shoulder that is set up on the mounting surface. Machined escape grooves should be used in the corners of the shoulder (as illustrated in Figure G-23) so that the corners will not interfere with the reference surfaces of the bed and table. Table G-9 lists the recommended shoulder heights of the mounting reference surfaces.
When installing the miniature slide table without providing machined escape grooves, the corner radius should be realigned as illustrated in Figure G-24. Table G-10 lists the values of the corner radius of the mounting surface.

Figure G-23 Mounting Surface Profile-1

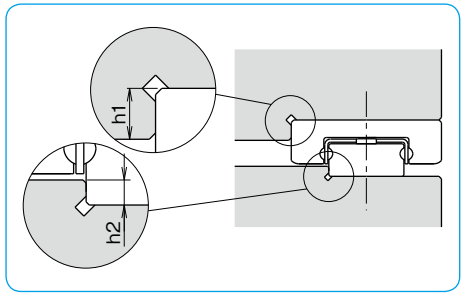

Table G-9 Shoulder Height on Mounting Reference Surface
unit／mm

part number	shoulder height for table h1	shoulder height for bed h2
SYBS 6	1.0	0.5
SYBS 8	1.2	0.8
SYBS12	1.5	0.8

Figure G-24 Mounting Surface Profile-2

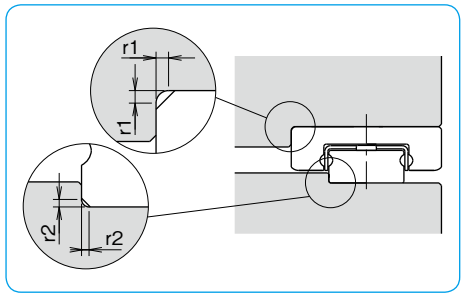

Table G-10 Maximum Corner Radius unit／mm

part number	mounting surface for table r1	mounting surface for bed r2
SYBS 6	0.1	0.05
SYBS 8	0.15	0.1
SYBS12	0.15	0.1

Recommended Torque Value

The bed should be tightened with a consistent torque by using a torque wrench. Table G-11 lists the recommended torque.

Table G-11 Recommended Torque unit／N・m

size	torque
M1	0.03
M1.6	0.15
M2	0.3

(for stainless steel screw A2-70)

Figure G-25 Profile of SYBS Bed

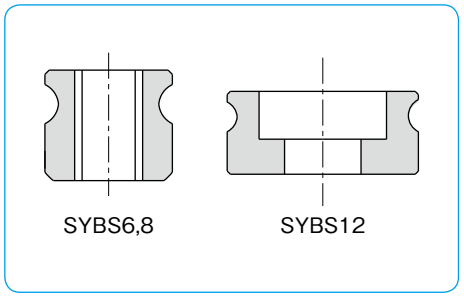

Mounting Example and Mounting Screw

All the mounting holes are fully through-hole. Mount the SYBS type as illustrated in Figure G-26 after considering the size of mounting screw, the maximum penetration depth, and the height of the bed. Make certain that the mounting screws do not interfere with the ball cage; otherwise, the accuracy and travel life will be affected adversely. Special screws for SYBS type are available from NB. Please refer to Table G-12 for dimensions of mounting screws.

Figure G-26 Mounting Example

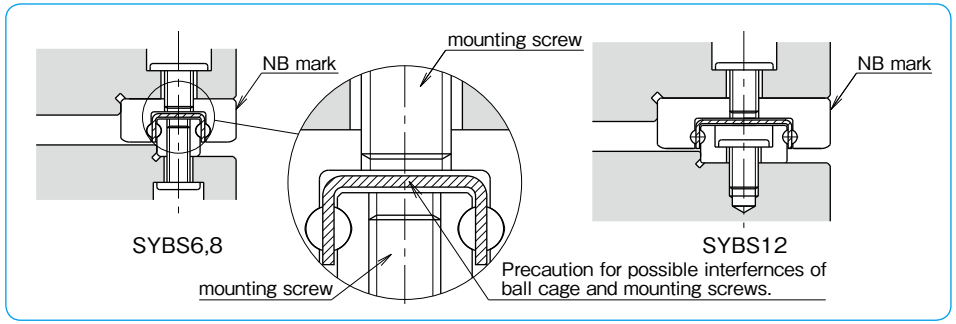

Table G-12 Mounting Screw (stainless steel)

M (size)	D mm	H mm	pitch mm	L mm
M1	1.8	0.45	0.25	5
M1.4	2.5	0.5	0.3	6
M1.6	2.3	0.5	0.35	4, 5, 6
M2	3	0.6	0.4	6

Figure G-27 Mounting Screw

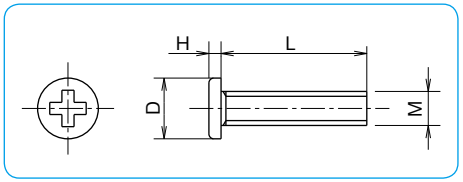

USE AND HANDLING PRECAUTIONS

Preload

The SYBS miniature slide table is provided with a slightly positive clearance type only.

End Piece

On both ends of the SYBS miniature slide table bed section, screws are attached to prevent the ball cage from escaping. Please note that the screws are designed only to prevent the ball cage from escaping and are not intended for the use as a mechanical stopper. The ball cage may become deformed on contact with the stopper and this will result in a negative affect of the accuracy and travel life.

Lubrication

NB miniature slide table SYBS type is supplied with an initial application of lithium soap grease and therefore is ready for immediate use. Make sure to relubricate with a similar type of grease periodically according to the operating conditions. For use in clean rooms or vacuum environments, miniature slide tables without grease or with customer specified grease are available. NB also provides low dust generation grease. Please refer to page Eng-39 for details.

Ball Cage Slippage

When a miniature slide table is operated at high speed; when offset loads or vibrations are present, the ball cage may deviate from the normal position. Under general operating conditions it is suggested that the motion speed be kept under 30m/min. It is recommended that the table be cycled to perform maximum full stroke several times during operation. This will allow the ball cage to be returned to its normal central position.

Allowable Load

The allowable load is a load under which the sum of elastic deformation of the rolling element and the raceway in the contact area subject to the maximum contact stress is small enough to guarantee smooth rolling movement. When very smooth and highly accurate liner motion is required, make sure to use the product within the allowable load values.

www.bergab.ru Берг АБ bergab@ya.ru Тел. (495)-228-06-21, факс (495) 223-3071

www.bergab.ru Берг АБ bergab@ya.ru Тел. (495)-228-06-21, факс (495) 223-3071

SYBS TYPE

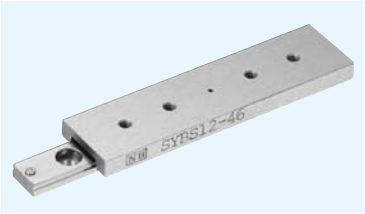

part number structure

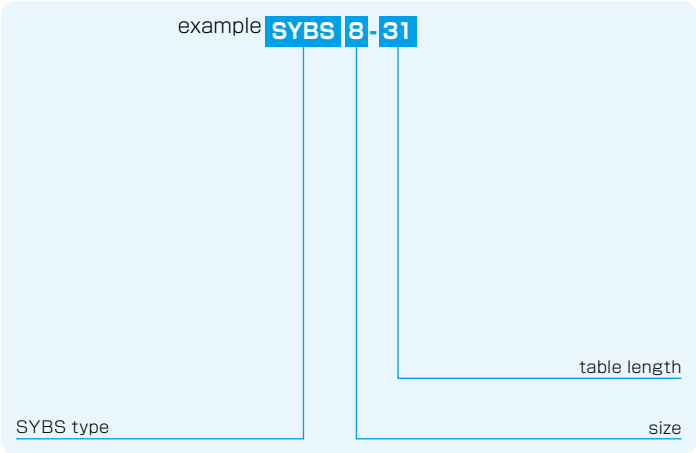

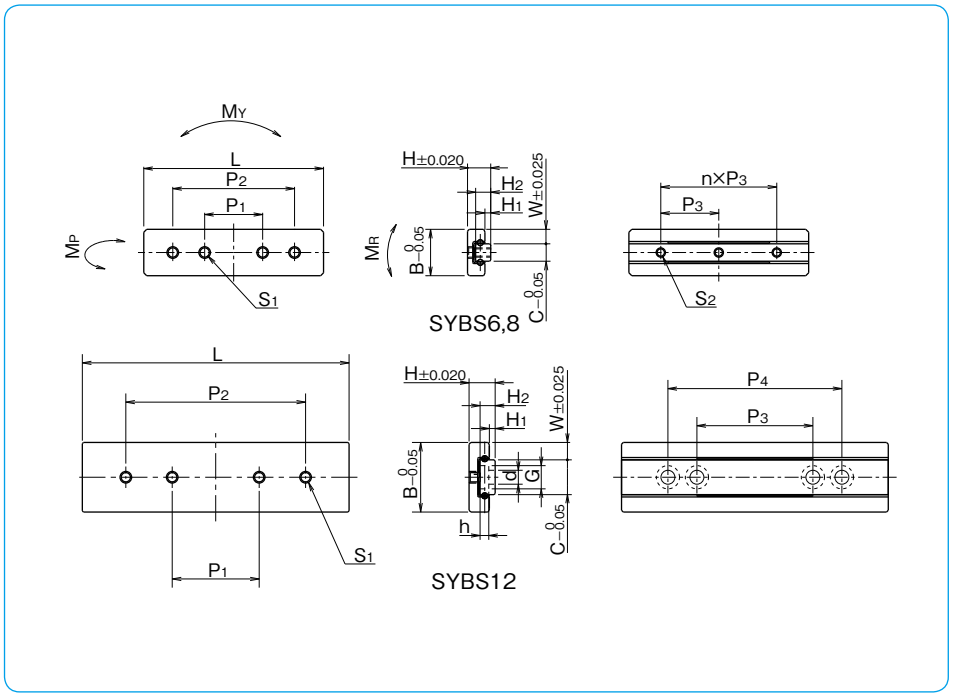

part number	major dimensions H mm	W mm	H1 mm	stroke mm	tabel-top dimensions B mm	L mm	P1 mm	P2 mm	S1	maximum screw penetration depth mm
SYBS 6−13	3.2	2	0.7	5	6	13	6.0	—	M1.4	0.5
SYBS 6−21				12		21	10.0	—		
SYBS 8−11	4	2.5	1	4	8	11	5.5	—	M2	0.7
SYBS 8−21				12		21	10.0	—		
SYBS 8−31				18		31	10.0	21		
SYBS12−23	4.5	3	1	12	12	23	8.0	—		1.2
SYBS12−31				18		31	15.0	—		
SYBS12−46				28		46	15.0	31		

※1: Custom mounting screws are provided with the SYBS-12 type only.
Other screw sizes are also available. (Please refer to page G-49)

bed-surface dimensions H2 mm	C mm	d×G×h mm	S2	P3 mm	n mm	P4 mm	basic load rating dynamic C N	static Co N	allowable load F N	allowable static moment MP N・m	MY N・m	MR N・m	mass g	size
2.0	2	—	M1	7	1	—	154	180	60.1	0.21	0.25	0.21	1.4	6−13
				7	2	—	229	315	105	0.57	0.69	0.37	2.2	6−21
2.6	3	—	M1.6	5	1	—	201	211	70.4	0.23	0.28	0.35	2.0	8−11
				10	1	—	368	493	164	1.02	1.22	0.83	3.7	8−21
				10	2	—	473	704	234	1.97	2.35	1.19	5.5	8−31
2.6	6	※1 2.4×4×1.5	—	15	1	—	404	563	187	1.30	1.55	1.80	7.6	12−23
				15	1	—	473	704	234	1.97	2.35	2.25	10.2	12−31
				20	—	30	658	1,120	375	4.80	5.72	3.60	15.2	12−46

1N≒0.102kgf 1N・m≒0.102kgf・m

www.bergab.ru Берг АБ bergab@ya.ru Тел. (495)-228-06-21, факс (495) 223-3071

www.bergab.ru Берг АБ bergab@ya.ru Тел. (495)-228-06-21, факс (495) 223-3071

GONIO WAY

The NB gonio way is a curved cross roller slide way. It is a curved motion bearing utilizing low-friction, non-recirculating precision rollers. It is used when there is a need to change the gradient or obtain an accurate gradient angle without changing the center of rotation in high-precision optical and measurement equipment.

STRUCTURE AND ADVANTAGES

The NB gonio way RVF type consists of curved tracking bases with precisely ground V-grooves and flat installation surfaces, as well as curved roller cages. The NB gonio way RV type consists of curved rails with precisely machined V-grooves and curved roller cages. Precision rollers are employed as the rolling elements, since the rolling elements do not recirculate, the frictional resistance will not vary significantly, providing curved movement with extremely low frictional resistance.

Low Frictional Resistance and Minute Motion

The precision grinding and curved roller cage allow for extremely low frictional resistance. The negligible difference between static and dynamic frictions allows the gonio way to follow minute movements accurately, realizing curved movement of high accuracy.

Low Noise

Since NB gonio way employs a non-recirculating design, there is no noise from the circulating area. In addition, the curved roller cage realizes quiet operation without contact noise between the rolling elements.

High Rigidity and High Load Capacity

The rollers provide a larger contact area and less elastic deformation compared to the ball elements. Additionally, since the rollers do not recirculate, the effective number of rotating elements is larger, resulting in high rigidity and high load capacity.

Flat Installation Surface

The flat installation surfaces of the RVF type do not require complicated machining of tables and beds when installing the product. As a result, machining costs can be reduced greatly.

Same Rotation Center

The curved V-grooves, which are finished with a precise grinding process, provide an accurate center of rotation. Furthermore, the products are composed to provide identical rotation centers when products of each size are installed to two axes. (refer to Table G-17.)

Figure G-28 Structure of Gonio Way RVF type

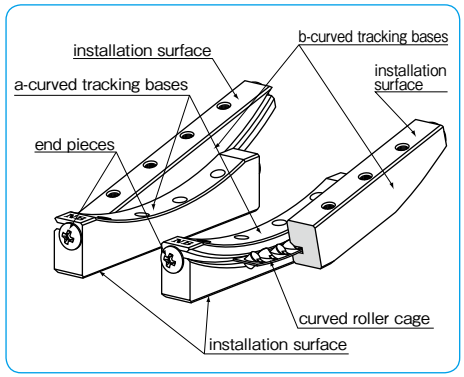

Figure G-29 Structure of Gonio Way RV type

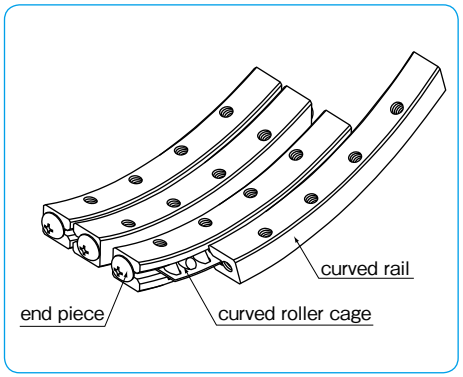

ACCURACY OF RVF TYPE

The accuracies of the gonio way RVF type are represented by mutual dimensional errors of four rails, which are measured along the overall length using the procedure as shown in Figure G-30.

Table G-13 Accuracy unit／μm

part number	mutual error between A and B / mutual error between C and D	mutual error between E and F / mutual error between H and I
RVF2050- 70	10	10
RVF2050- 87		
RVF2050-103		
RVF2050-120		
RVF3070- 85		
RVF3070-110		
RVF3100-125		
RVF3100-160		

Figure G-30 Accuracy Measuring Method

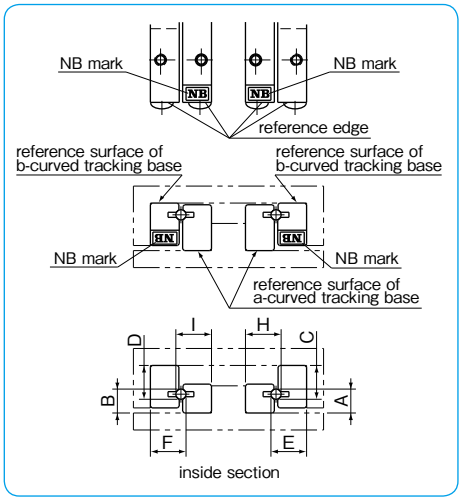

ACCURACY OF RV TYPE

The accuracies of the gonio way RV type are represented by mutual dimensional errors of four rails, which are measured along the overall length using the procedure as shown in Figure G-31.

Table G-14 Accuracy unit／μm

part number	accuracy
RV2040- 50	10
RV2060- 60	
RV3070- 90	
RV3070-110	
RV3100-160	

The reference surfaces are located on the opposite side of the NB mark. There are inner reference surface and outer reference surface in one set of RV.

Figure G-31 Accuracy Measuring Method

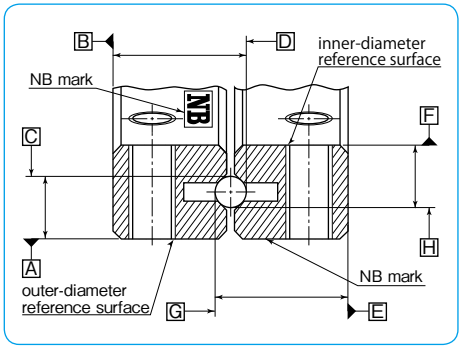

RATED LIFE

The life of a gonio way is obtained using the following equations.

Rated Life

$$L=\frac{90}{\theta}\times\left(\frac{f_T}{f_W}\times\frac{C}{P}\right)^{\frac{10}{3}}$$

Life Time

$$L_h=\frac{L\times10^6}{60\times n}$$

L: travel life (10^6cycles) θ: rotating angle (degree)
C: basic dynamic load rating (N) P: applied load (N)
f_T: temperature coefficient f_W: applied load coefficient
※Refer to page F-05 for the coefficients.

L_h: life time (hr)
n_1: number of cycles per minute (cpm)

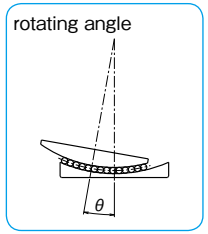

www.bergab.ru Берг АБ bergab@ya.ru Тел. (495)-228-06-21, факс (495) 223-3071

www.bergab.ru Берг АБ bergab@ya.ru Тел. (495)-228-06-21, факс (495) 223-3071

MOUNTING OF RVF TYPE

Accuracy of Mounting Surface

To maximize the performance of NB gonio way, it is important to finish the installation surface with high accuracies.

Parallelism of surface 1 against surface A
Perpendicularity of surface 2 against surface A
Perpendicularity of surface 5 against surface A
Parallelism of surface 3 against surface B
Perpendicularity of surface 4 against surface B
Perpendicularity of surface 6 against surface B
Parallelism of surface 2 against surface C
Parallelism of surface 4 against surface C

Figure G-32 Accuracy of Mounting Surface

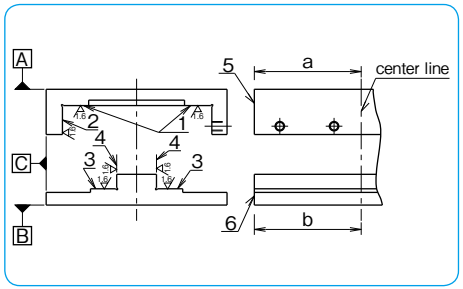

Figure G-33 Example of Installation of RVF type

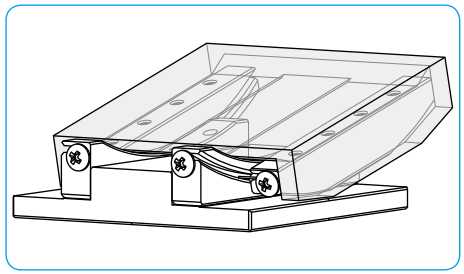

Installation Procedure

Setting the curved tracking bases temporarily

(1) Remove burrs, stains, and dust from the installation surfaces of the curved tracking bases of tables and beds. Foreign particles must be kept out of the assembly work as well.

(2) Apply low viscosity oil to contact surfaces, check the reference edges of an a-curved tracking base and bed, and then tighten the screws temporarily. (Figure G-34a)

(3) Align the reference edges (NB mark side) of a b-curved tracking base and an a-curved tracking base to the same orientation. Then, insert the curved roller cages between the curved tracking bases at the center area. Make sure that the curved roller cages will not interfere with the curved raceway grooves of the curved roller tracking bases. (Figure G-34b)

(4) Check the reference edge of the table, set the table over the b-curved tracking base, and then secure the table temporarily. (Figure G-34c)

Figure G-34 Installation Method (1)

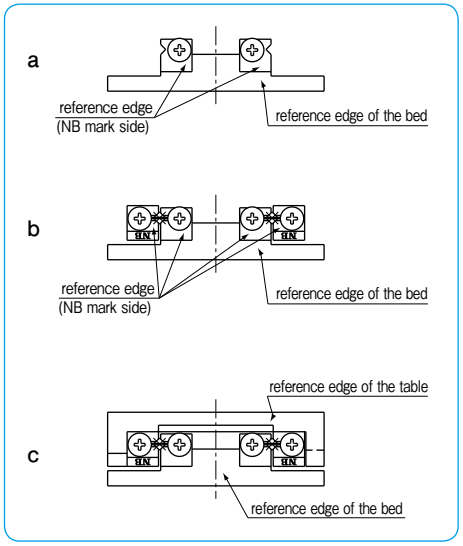

Setting four curved tracking bases in parallel position

(5) Move the table to the maximum stroke ends of both sides and adjust the setting so that the curved roller cage is positioned at the center of the curved tracking base.

(6) Move the table to the center position and tighten the adjustment screws with ※slightly strong torque by using a torque wrench. (Figure G-35d)
※"Slightly strong torque" here means slightly stronger than the torque at which the oscillation of the dial indicator is stabilized at the minimum value when the table is moved right and left, or when pressure is applied to the rolling direction while the dial indicator is attached to the side face (reference side) of the table. (Figure G-35i)

(7) Move the table to the maximum stroke end of one side and tighten the adjustment screws on the curved roller cage with the same torque as in step (6). (Figure G-35e)

(8) Move the table to the maximum stroke end of the other side and tighten the adjustment screws with a torque wrench by repeating the procedure above. (Figure G-35f)

Securing the curved tracking bases

(9) Mount an edge reference plate between the reference edge of the a-curved tracking base and end piece, press it against the reference edge of the bed, and then tighten only the mounting screws in the middle. (Figure G-35g)

(10) Repeat the procedure above to mount an edge reference plate between the reference edge of the b-curved tracking base and the end piece. Press it against the reference edge of the bed, and then tighten only the mounting screws in the middle. (Figure G-35h) In order to maintain parallelism of curved tracking bases, do not cycle the table during this process and make sure that there is no clearance between the edge of the table and the edge reference plate.

(11) Secure the rest of the mounting screws on the curved roller cage one by one by moving the table as instructed in steps (7) and (8).

Adjusting the preload

(12) Move the table to the right and left with the test indicator attached to the side face of the table (reference side). Or, apply pressure in the rolling direction and confirm that the oscillation of the indicator is stabilized at the minimum level. (Figure G-35i)

(13) Return the mounting screws on the b-curved tracking base at the adjustment screw side to the temporary setting.

(14) Return the table to the center position, slightly loosen the adjustment screws in the middle, and then gradually loosen the adjustment screws on the curved roller cage while moving the table as instructed in steps (7) and (8) Make sure not to reduce the preload too much.

(15) Finally, secure the b-curved tracking base at the adjustment screw side, which has been installed temporarily. Secure the mounting screws on the curved roller cage one by one by moving the table as instructed above.

Figure G-35 Installation Method (2)

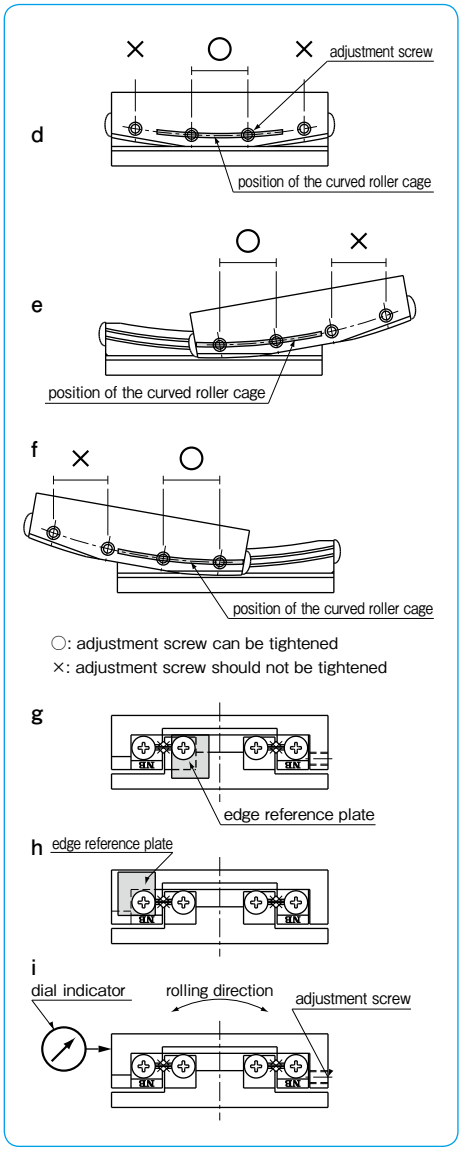

Table G-15 Recommended Torque for Mounting Screw unit／N・m

size	tightening torque
M2.5	0.5
M3	1.1

(for stainless steel screw A2-70)

www.bergab.ru Берг АБ bergab@ya.ru Тел. (495)-228-06-21, факс (495) 223-3071

www.bergab.ru Берг АБ bergab@ya.ru Тел. (495)-228-06-21, факс (495) 223-3071

MOUNTING OF RV TYPE

Accuracy of Mounting Surface

The accuracy of surfaces 1, 2, 3, and 4 (Figure G-36) directly affect the motion accuracy.
To maximize the performance of NB gonio way, it is important to finish the installation surface with high accuracies.

Figure G-36 Accuracy of Mounting Surface

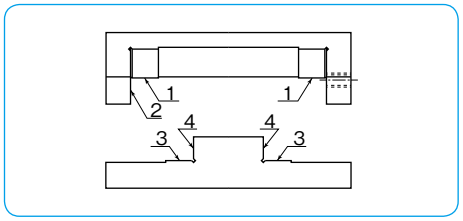

Figure G-37 Example of Installation

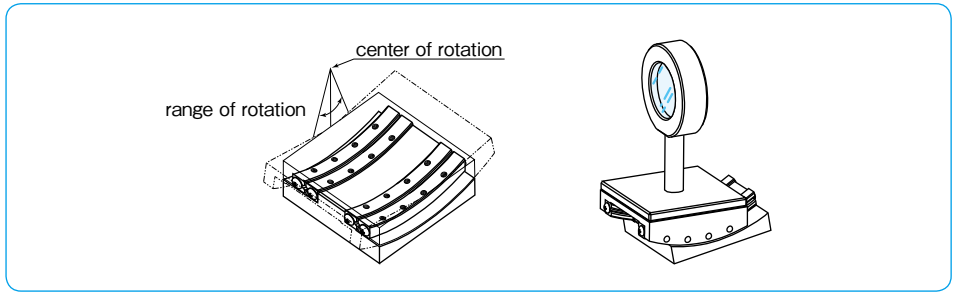

Installation Procedure

(1) Remove burrs, dirt, dust, etc. from the table and the installation surfaces of the bed.
(2) Apply a low viscosity oil to contact surfaces. Fix the rail ①inner-diameter reference surface, ②outer-diameter reference surface and ③outer-diameter reference surface by tightening screws to the specified torque. (Table G-16, Figure G-38a)
(3) Temporarily attach the rail ④inner-diameter reference surface on curved rail to the adjustment side. (Figure G-38b)
(4) Remove the end pieces on one side of the rails and insert roller cages to the center. (Figure G-38c)
(5) Re-attach end pieces.
(6) Move the table to the right and left (in the direction of the stroke) to position roller cages at the center of the curved rails.
(7) Set an indicator at the side of the table on the reference surface. (Figure G-38d)
(8) Move the table to one of the stroke ends and tighten the adjustment screws slightly. (Figure G-39e)

Figure G-38 Installation Method (1)

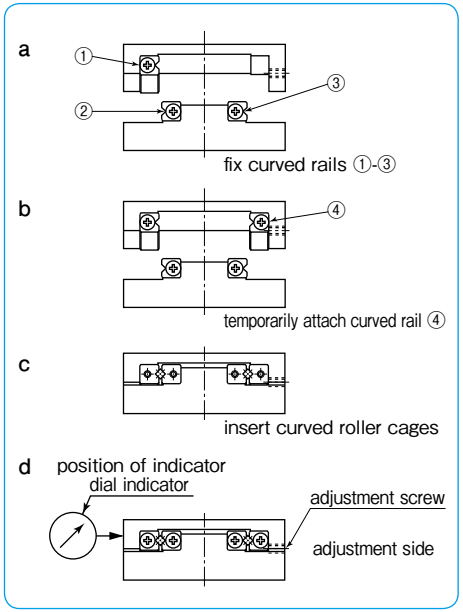

(9) Move the table fully to the other stroke end and tighten the adjustment screws slightly. (Figure G-39f)
(10) Move the table to the center and lightly tighten adjustment screws. (Figure G-39g)
(11) Repeat steps (8)～(10) until there is no clearance around the table. If there is no clearance, the indicator will show a minimum fluctuation value when the table is moved to the right and left. Exercise care so as not to apply an excessive preload.
(12) Repeat steps (8)～(10) and tighten the adjustment screws uniformly by using a torgue wrench.
(13) Fix the rail ④inner-diameter reference surface. Tighten the mounting screws sequentially by moving the table in the same manner as with the adjustment screws.

Table G-16 Recommended Torque for Mounting Screw
unit／N・m

size	torque
M3	1

(for stainless steel screw A2-70)

Figure G-39 Installation Method (2)

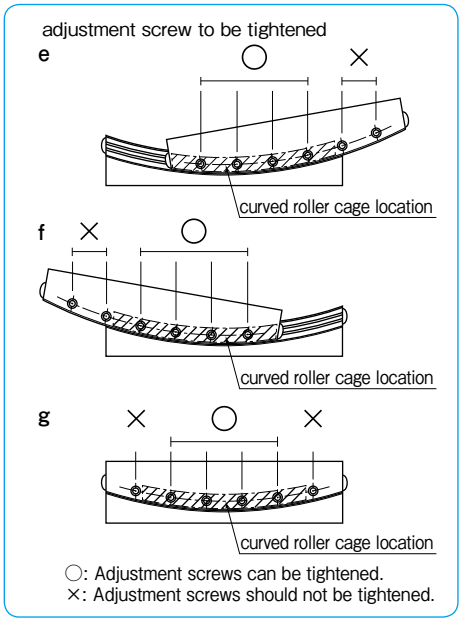

www.bergab.ru Берг АБ bergab@ya.ru Тел. (495)-228-06-21, факс (495) 223-3071

www.bergab.ru Берг АБ bergab@ya.ru Тел. (495)-228-06-21, факс (495) 223-3071

RVF TYPE 2 AXES AND SPECIAL SPECIFICATIONS

When incorporating RVF type units onto two axes as illustrated in Figure G-40, adjust the height of one lifting axis as instructed in Table G-17. Then, adjust dimension b (the height of the installation surface of the a-curved tracking base) in Figure G-40 according to the table in order to obtain the identical rotation center for the two axes. In addition, requests can be made for custom specifications including table units fitted for two axes, non-standard lengths for curved tracking bases, the radius of rotation, the rotation range, and the number of rollers. Contact NB for further information.

Table G-17 Two Axes Specification unit／mm

part number combination	a	R_1	R_2
RVF2050- 70 RVF2050- 87	17	70	87
RVF2050-103 RVF2050-120	17	103	120
RVF3070- 85 RVF3070-110	25	85	110
RVF3100-125 RVF3100-160	35	125	160

Figure G-40 Two Axes Specification

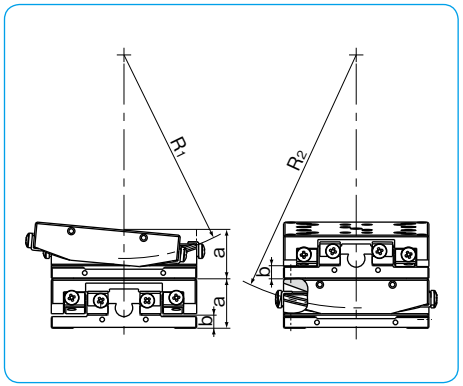

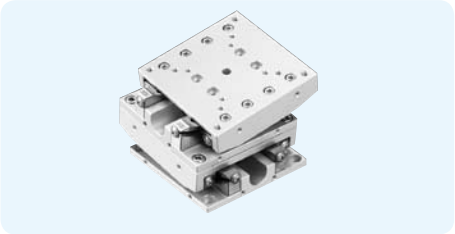

USE AND HANDLING PRECAUTIONS

Lubrication
NB gonio ways are lubricated using lithium soap based grease prior to shipment, so they can be used immediately. Make sure to relubricate with a similar type of grease periodically according to the operating conditions. NB also provides low dust generation grease for the linear system. Please refer to page Eng-39 for further details.

Dust Prevention
If a foreign matter, such as dust and dirt, enters the inside of the NB gonio way, it will deteriorate the accuracy and life of the system. A gonio way used in a harsh environment should be protected with a cover.

Operating Environment
The recommended operating temperature range of the NB gonio way is −20℃ to 110℃.

Adjustment
Inaccuracy in mounting surface or improper adjustment of preload will reduce the motion accuracy, resulting in skewing and shortening of gonio way life. The adjustment should be carried out carefully.

Cage Slippage
When used under high-speed, unbalanced-load, or vibrational conditions, cage slippage may occur. The stroke length should be determined with sufficient margin, and an excessive preload should not be applied.

End Pieces
End pieces are attached to each end of the NB gonio way to prevent removal of the curved roller cage. Do not use as a mechanical stopper.

Careful Handling
Dropping the NB gonio way causes the rolling elements to make dents in the raceway surface. This will prevent smooth motion and will also affect accuracy. Be sure to handle the product with care.

Use as a Set
The accuracy of the rails has been matched within each set. Note that the accuracy will be affected when the rails of different sets are combined.

Allowable Load
The allowable load is a load under which the sum of elastic deformation of the rolling element and the raceway in the contact area subject to the maximum contact stress is small enough to guarantee smooth rolling movement. When very smooth and highly accurate motion is required, make sure to use the product within the allowable load.

www.bergab.ru Берг АБ bergab@ya.ru Тел. (495)-228-06-21, факс (495) 223-3071

www.bergab.ru Берг АБ bergab@ya.ru Тел. (495)-228-06-21, факс (495) 223-3071

RVF TYPE

– Gonio Way flat-installation-surface –

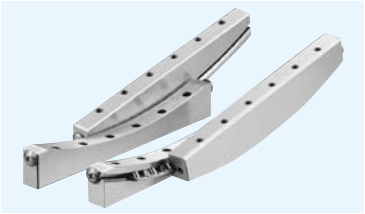

part number structure

example **RVF 3 100 - 125 - 16Z**

- RVF type
- size
- rail length
- radius from rotation center
- number of rollers

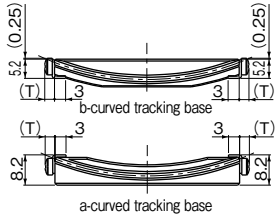

RVF2050-70-10Z
RVF2050-87-10Z

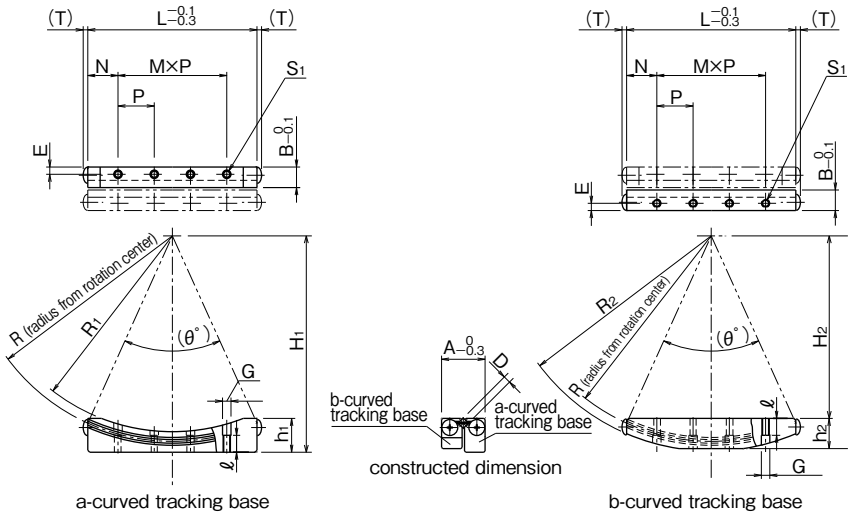

One set consists of 2 a-curved tracking bases, 2 b-curved tracking bases, 2 roller cages, 8 end pieces, and 2 edge reference plates.

part number	rotation range	roller diameter D mm	number of rollers Z	L mm	R mm	R1 mm	R2 mm	H1 mm	H2 mm	h1 mm	h2 mm	A mm	B mm
												major dimensions	
RVF2050- 70-10Z	± 5°	2	10	50	70	67	73	72.5	64.5	7.5	7.5	15	7.25
RVF2050- 87-10Z			10		87	84	89.5	89.5	81.5	7.5	7.5		
RVF2050-103-10Z			10		103	100	106	105.5	97.5	7.5	8		
RVF2050-120- 9Z			9		120	117	123	122.5	114.5	7.5	8		
RVF3070- 85-10Z	±10°	3	10	70	85	81	89	89.5	75.5	14	12.5	18	8.5
RVF3070-110-10Z			10		110	106	114	114.5	100.5	12.8	12.5		
RVF3100-125-16Z			16	100	125	121	129	129.5	110.5	17.5	18		8.5
RVF3100-160-14Z			14		160	156	164	164.5	145.5	15	18		

※ Please refer to page G-64 for information on cage types.

M×P mm	N mm	E mm	S1	ℓ mm	G mm	T mm	θ°	basic load rating dynamic C N	basic load rating static Co N	allowable load F N	mass g	part number
3×12.5	6.25	2.5	M2.5	4	3	2.7	41.8°	1,180	2,400	800	66	RVF2050- 70-10Z
							33.3°	1,060	2,430	810	70	RVF2050- 87-10Z
3×13	5.5					1.5	28.0°	998	2,440	815	70	RVF2050-103-10Z
							24.0°	751	1,970	657	70	RVF2050-120- 9Z
3×15	12.5	3	M3	7	3.5	1.9	48.6°	2,680	5,530	1,840	182	RVF3070- 85-10Z
							37.1°	2,440	5,620	1,870	182	RVF3070-110-10Z
5×15	12.5	3	M3	7	3.5	1.9	47.1°	3,520	8,850	2,950	327	RVF3100-125-16Z
							36.4°	2,860	7,890	2,630	323	RVF3100-160-14Z

1N≒0.102kgf

www.bergab.ru Берг АБ bergab@ya.ru Тел. (495)-228-06-21, факс (495) 223-3071

www.bergab.ru Берг АБ bergab@ya.ru Тел. (495)-228-06-21, факс (495) 223-3071

RV TYPE
— Gonio Way —

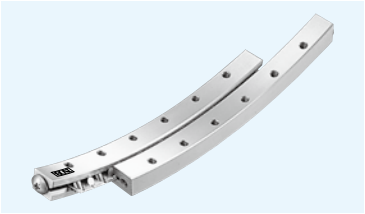

part number structure

example RV 3 070 - 110 - 10Z

- RV type
- size
- rail length
- radius from rotation center
- number of rollers

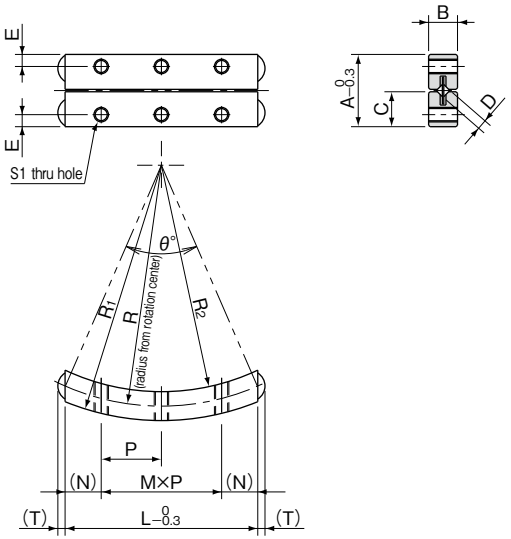

One set consists of 4 curved rails, 2 curved roller cages, and 8 end pieces.

part number	rotation range	roller diameter D mm	number of rollers Z	L mm	R mm	R_1 mm	R_2 mm	A mm	major dimensions B mm	C mm
RV2040- 50- 7Z	±10°	2	7	40	50	53	47	15	6	7.25
RV2060- 60-12Z			12	60	60	63	57			
RV3070- 90-11Z	±10°	3	11	70	90	94	86	18	8	8.5
RV3070-110-10Z			10	70	110	114	106			
RV3100-160-14Z			14	100	160	164	156			

※ Please refer to page G-64 for information on cage types.

M×P mm	N mm	E mm	S_1	T mm	θ°	basic load rating dynamic C N	basic load rating static Co N	allowable load F N	mass g	part number
2×12.5	7.5	2.5	M3	1.5	47.2°	820	1,440	482	49	RV2040- 50- 7Z
3×12.5	11.25				60.0°	1,490	2,800	936	75	RV2060- 60-12Z
3×15	12.5	3	M3	1.9	45.8°	2,640	5,550	1,850	137	RV3070- 90-11Z
3×15					37.1°	2,440	5,620	1,870	135	RV3070-110-10Z
5×15					36.4°	2,860	7,890	2,630	193	RV3100-160-14Z

1N≒0.102kgf

www.bergab.ru Берг АБ bergab@ya.ru Тел. (495)-228-06-21, факс (495) 223-3071

www.bergab.ru Берг АБ bergab@ya.ru Тел. (495)-228-06-21, факс (495) 223-3071

CR TYPE

– Standard Curved Roller Cage –

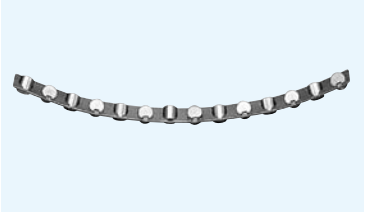

part number structure

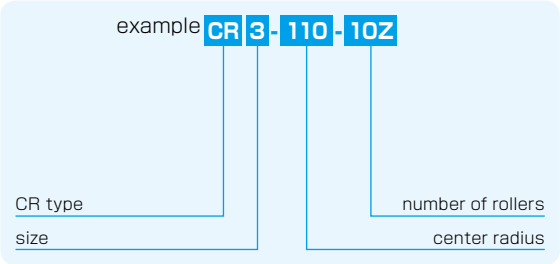

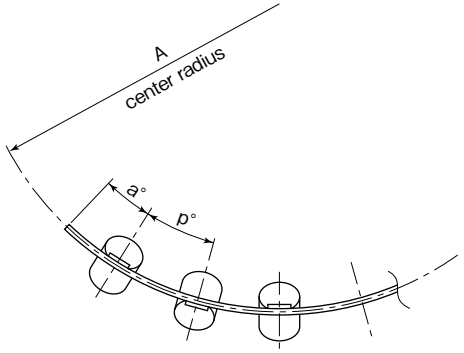

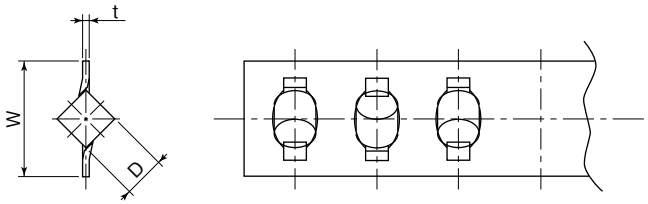

part number	roller diameter D mm	center radius A mm	t mm	w mm	p°	a°	applicable type
CR2- 50- 7Z	2	50	0.3	5.6	4.6°	2.9°	RV
CR2- 60-12Z		60			3.8°	2.4°	RV
CR2- 70-10Z		70			3.3°	2.0°	RVF
CR2- 87-10Z		87			2.6°	1.6°	RVF
CR2-103-10Z		103			2.2°	1.4°	RVF
CR2-120- 9Z		120			1.9°	1.2°	RVF
CR3- 85-10Z	3	85	0.4	7.2	3.4°	2.9°	RVF
CR3- 90-11Z		90			3.2°	1.9°	RV
CR3-110-10Z		110			2.6°	1.5°	RVF、RV
CR3-125-16Z		125			2.3°	1.3°	RVF
CR3-160-14Z		160			1.8°	1.0°	RVF、RV

www.bergab.ru Берг АБ bergab@ya.ru Тел. (495)-228-06-21, факс (495) 223-3071

www.bergab.ru Берг АБ bergab@ya.ru Тел. (495)-228-06-21, факс (495) 223-3071

NV TYPE
−NV2／NV3／NV4−

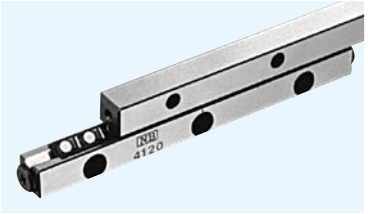

part number structure

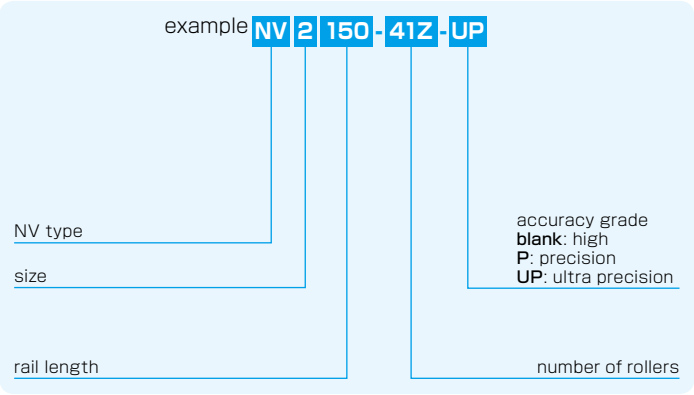

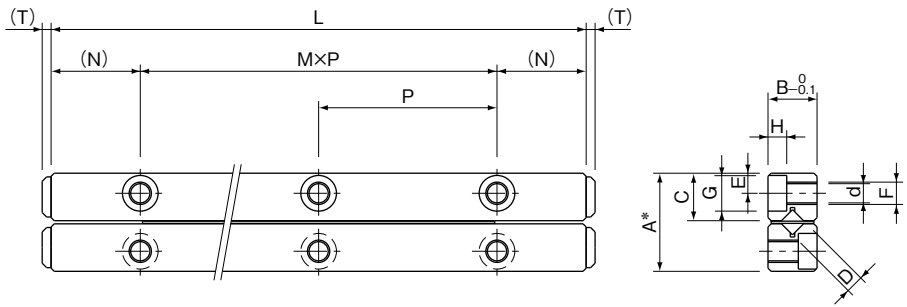

High grade: A-0.2 0 Precision grade (P): A-0.1 0 Ultra Precision grade (UP): A-0.1 0
One set consists of 4 rails, 2 R-retainers, and 8 end pieces.

part number	stroke ST mm	roller diameter D mm	number of rollers Z	L mm	A mm	B mm	C mm	M×P mm	N mm	E mm	F mm	d mm	G mm	H mm	T mm	basic load rating dynamic C N	basic load rating static Co N	allowable load F N	mass g	size
NV2030- 5Z	18	2	5	30	12	6	5.7	1×15	7.5	2.5	M3	2.55	4.4	2	2	1,360	1,520	500	33	2030
2045- 9Z	25		9	45				2×15								2,330	3,050	1,010	49	2045
2060-15Z	30		15	60				3×15								3,990	6,110	2,030	62	2060
2075-19Z	40		19	75				4×15								4,740	7,630	2,540	74	2075
2090-23Z	50		23	90				5×15								5,460	9,160	3,050	91	2090
2105-27Z	65		27	105				6×15								6,160	10,600	3,560	103	2105
2120-33Z	70		33	120				7×15								6,830	12,200	4,070	120	2120
2135-37Z	80		37	135				8×15								7,490	13,700	4,580	132	2135
2150-41Z	90		41	150				9×15								8,130	15,200	5,090	149	2150
2165-47Z	95		47	165				10×15								9,370	18,300	6,110	161	2165
2180-51Z	100		51	180				11×15								9,970	19,800	6,620	174	2180
NV3050- 9Z	25	3	9	50	18	8	8.65	1×25	12.5	3.5	M4	3.3	6	3.1	2	6,150	8,060	2,680	97	3050
3075-13Z	48		13	75				2×25								8,440	12,100	4,030	140	3075
3100-19Z	60		19	100				3×25								12,500	20,100	6,720	192	3100
3125-23Z	83		23	125				4×25								14,400	24,200	8,060	245	3125
3150-29Z	90		29	150				5×25								16,300	28,200	9,410	290	3150
3175-35Z	103		35	175				6×25								19,800	36,300	12,100	337	3175
3200-41Z	113		41	200				7×25								21,500	40,300	13,400	385	3200
3225-43Z	150		43	225				8×25								23,200	44,300	14,700	434	3225
NV4080- 9Z	60	4	9	80	22	11	10.65	1×40	20	4.5	M5	4.3	8	4.2	2	12,100	15,700	5,250	265	4080
4120-17Z	75		17	120				2×40								20,700	31,500	10,500	400	4120
4160-23Z	105		23	160				3×40								28,500	47,200	15,700	530	4160
4200-29Z	130		29	200				4×40								32,100	55,100	18,300	660	4200
4240-37Z	143		37	240				5×40								39,000	70,900	23,600	800	4240
4280-43Z	170		43	280				6×40								45,600	86,600	28,800	930	4280

major dimensions

The basic static load rating is the value at the center of the stroke.

1N≒0.102kgf

www.bergab.ru Берг АБ bergab@ya.ru Тел. (495)-228-06-21, факс (495) 223-3071

www.bergab.ru Берг АБ bergab@ya.ru Тел. (495)-228-06-21, факс (495) 223-3071

NV TYPE
–NV6/NV9/NV12–

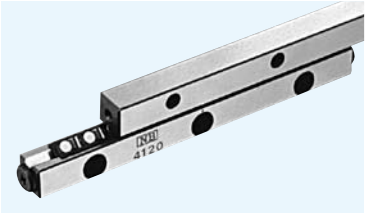

part number structure

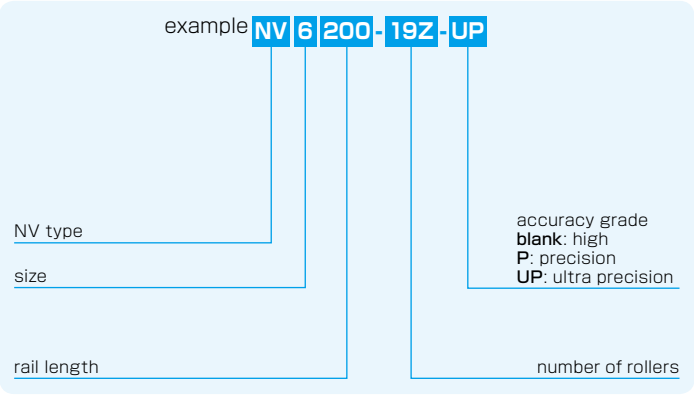

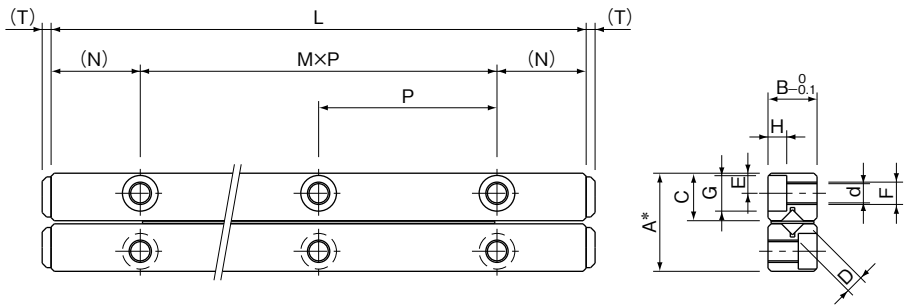

High grade: A-0.2 0 Precision grade (P): A-0.1 0 Ultra Precision grade (UP): A-0.1 0
One set consists of 4 rails, 2 R-retainers, and 8 end pieces.

part number	stroke ST mm	roller diameter D mm	number of rollers Z	major dimensions L mm	A mm	B mm	C mm	M×P mm	N mm	E mm
NV6100- 9Z	63	6	9	100	31	15	15.15	1×50	25	6
6150- 15Z	85		15	150				2×50		
6200- 19Z	135		19	200				3×50		
6250- 25Z	158		25	250				4×50		
6300- 31Z	180		31	300				5×50		
6350- 35Z	230		35	350				6×50		
6400- 39Z	275		39	400				7×50		
NV9200- 13Z	120	9	13	200	44	22	21.5	1×100	50	9
9300- 21Z	170		21	300				2×100		
9400- 29Z	220		29	400				3×100		
9500- 35Z	300		35	500				4×100		
NV12300- 15Z	180	12	15	300	58	28	28.5	2×100	50	12
12400- 21Z	230		21	400				3×100		
12500- 27Z	280		27	500				4×100		
12600- 31Z	380		31	600				5×100		

The basic static load rating is the value at the center of the stroke.

F mm	d mm	G mm	H mm	T mm	basic load rating dynamic C N	static Co N	allowable load F N	mass g	size
M6	5.2	9.5	5.2	3	29,600	37,500	12,500	650	6100
					50,900	75,100	25,000	970	6150
					60,600	93,900	31,300	1,300	6200
					69,800	112,000	37,500	1,620	6250
					87,400	150,000	50,100	1,940	6300
					95,800	169,000	56,300	2,360	6350
					104,000	187,000	62,600	2,780	6400
M8	6.8	10.5	6.2	4	96,000	128,000	42,600	2,720	9200
					143,000	213,000	71,100	4,080	9300
					186,000	298,000	99,500	5,440	9400
					226,000	384,000	128,000	6,790	9500
M10	8.5	13.5	8.2	4	228,000	317,000	105,000	6,770	12300
					271,000	396,000	132,000	9,040	12400
					352,000	555,000	185,000	11,300	12500
					391,000	635,000	211,000	13,560	12600

1N≒0.102kgf

www.bergab.ru Берг АБ bergab@ya.ru Тел. (495)-228-06-21, факс (495) 223-3071

www.bergab.ru Берг АБ bergab@ya.ru Тел. (495)-228-06-21, факс (495) 223-3071

SV TYPE
–SV1/SV2–

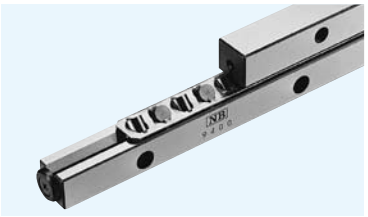

part number structure

example **SVS 2 150 - RA 26Z - UP**

- specification
  SV: standard
  SVS: anti-corrosion
- size
- rail length
- cage type
  blank: standard cage
  RA: aluminum cage standard roller
- number of rollers
- accuracy grade
  blank: high
  P: precision
  UP: ultra precision

※Refer to page G-5 for information on cage types.

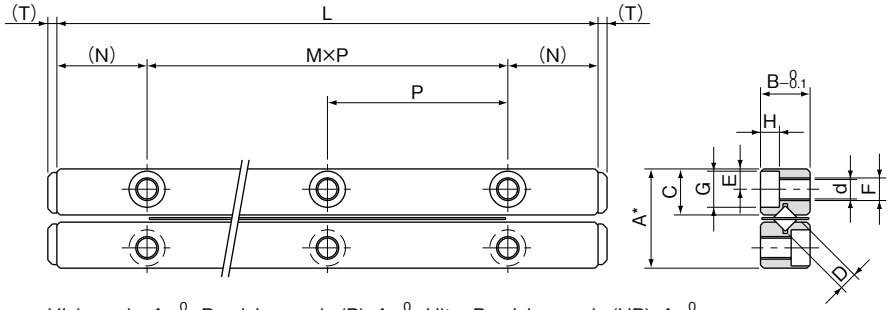

High grade: A-0.2 Precision grade (P): A-0.1 Ultra Precision grade (UP): A-0.1
One set consists of 4 rails, 2 roller cages, and 8 end pieces.

part number standard	part number anti-corrosion	stroke ST mm	roller diameter D mm	number of rollers Z	L mm	A mm	B mm	C mm
SV 1020-5Z	SVS 1020-5Z	12	1.5	5	20	8.5	4	3.8
1030-7Z	1030-7Z	20		7	30			
1040-10Z	1040-10Z	27		10	40			
1050-13Z	1050-13Z	32		13	50			
1060-16Z	1060-16Z	37		16	60			
1070-19Z	1070-19Z	42		19	70			
1080-21Z	1080-21Z	50		21	80			
SV 2030-5Z	SVS 2030-5Z	18	2	5	30	12	6	5.5
2045-8Z	2045-8Z	24		8	45			
2060-11Z	2060-11Z	30		11	60			
2075-13Z	2075-13Z	44		13	75			
2090-16Z	2090-16Z	50		16	90			
2105-18Z	2105-18Z	64		18	105			
2120-21Z	2120-21Z	70		21	120			
2135-23Z	2135-23Z	84		23	135			
2150-26Z	2150-26Z	90		26	150			
2165-29Z	2165-29Z	95		29	165			
2180-32Z	2180-32Z	100		32	180			

major dimensions M×P mm	N mm	E mm	F	d mm	G mm	H mm	T mm	basic load rating dynamic C N	static Co N	allowable load F N	mass g	size
1×10	5	1.8	M2	1.65	3	1.4	0.8	464	476	158	11	1020
2×10								641	714	237	14	1030
3×10								959	1,190	396	18	1040
4×10								1,100	1,420	475	22	1050
5×10								1,380	1,900	633	26	1060
6×10								1,510	2,140	712	30	1070
7×10								1,650	2,380	792	34	1080
1×15	7.5	2.5	M3	2.55	4.4	2	2	1,090	1,170	390	28	2030
2×15								1,900	2,340	780	42	2045
3×15								2,270	2,930	976	55	2060
4×15								2,620	3,510	1,170	69	2075
5×15								3,280	4,680	1,560	83	2090
6×15								3,590	5,270	1,750	96	2105
7×15								3,900	5,860	1,950	110	2120
8×15								4,210	6,440	2,140	123	2135
9×15								4,790	7,610	2,530	137	2150
10×15								5,080	8,200	2,730	151	2165
11×15								5,640	9,370	3,120	165	2180

1N≒0.102kgf

※Maximum Rail Length (standard type only)

part number	Max. length
SV1	200mm
SV2	450mm

※Please contact NB for details.

www.bergab.ru Берг АБ bergab@ya.ru Тел. (495)-228-06-21, факс (495) 223-3071

www.bergab.ru Берг АБ bergab@ya.ru Тел. (495)-228-06-21, факс (495) 223-3071

SV TYPE
−SV3／SV4−

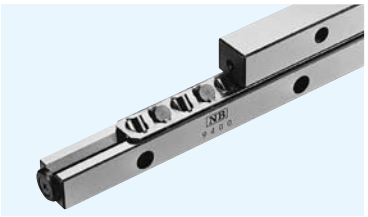

part number structure

example **SVS 4 200 - RAS 19Z - UP**

- specification
  SV: standard
  SVS: anti-corrosion
- size
- rail length
- cage type
  blank: standard cage
  RA: aluminum cage standard roller
  RAS: aluminum cage stainless steel roller
- number of rollers
- accuracy grade
  blank: high
  P: precision
  UP: ultra precision

※Refer to page G-5 for information on cage types.

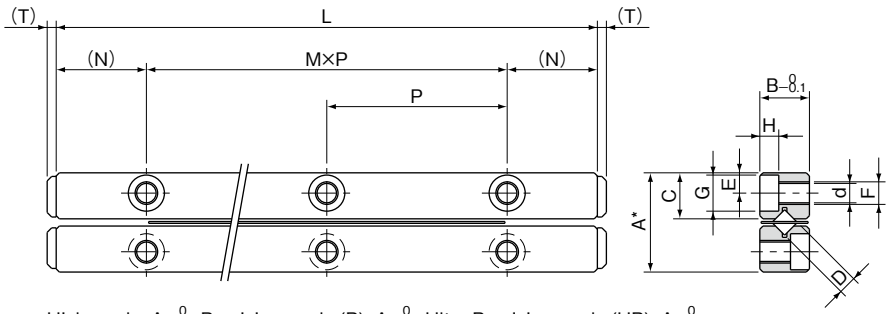

High grade: A-0.2 Precision grade (P): A-0.1 Ultra Precision grade (UP): A-0.1
One set consists of 4 rails, 2 roller cages, and 8 end pieces.

part number standard	part number anti-corrosion	stroke ST mm	roller diameter D mm	number of rollers Z	L mm	A mm	B mm	C mm
SV 3050-7Z	SVS 3050-7Z	28	3	7	50	18	8	8.3
3075-10Z	3075-10Z	48		10	75			
3100-14Z	3100-14Z	58		14	100			
3125-17Z	3125-17Z	78		17	125			
3150-21Z	3150-21Z	88		21	150			
3175-24Z	3175-24Z	105		24	175			
3200-28Z	3200-28Z	115		28	200			
3225-31Z	3225-31Z	135		31	225			
3250-35Z	3250-35Z	145		35	250			
3275-38Z	3275-38Z	165		38	275			
3300-42Z	3300-42Z	175		42	300			
3325-45Z	3325-45Z	195		45	325			
3350-49Z	3350-49Z	205		49	350			
SV 4080-7Z	SVS 4080-7Z	58	4	7	80	22	11	10.2
4120-11Z	4120-11Z	82		11	120			
4160-15Z	4160-15Z	105		15	160			
4200-19Z	4200-19Z	130		19	200			
4240-23Z	4240-23Z	150		23	240			
4280-27Z	4280-27Z	175		27	280			
4320-31Z	4320-31Z	200		31	320			
4360-35Z	4360-35Z	225		35	360			
4400-39Z	4400-39Z	250		39	400			
4440-43Z	4440-43Z	270		43	440			
4480-47Z	4480-47Z	295		47	480			

※Maximum Rail Length (standard type only)

part number	Max. length
SV3	700mm
SV4	700mm

※Please contact NB for details.

major dimensions M×P mm	N mm	E mm	F	d mm	G mm	H mm	T mm	basic load rating dynamic C N	static Co N	allowable load F N	mass g	size
1×25	12.5	3.5	M4	3.3	6	3.1	2	3,490	3,890	1,290	94	3050
2×25								5,230	6,490	2,160	135	3075
3×25								6,810	9,080	3,020	187	3100
4×25								7,560	10,300	3,450	234	3125
5×25								9,000	12,900	4,320	281	3150
6×25								10,300	15,500	5,180	327	3175
7×25								11,700	18,100	6,040	374	3200
8×25								12,300	19,400	6,480	421	3225
9×25								13,600	22,000	7,340	468	3250
10×25								14,800	24,600	8,200	514	3275
11×25								16,000	27,200	9,070	561	3300
12×25								16,600	28,500	9,500	608	3325
13×25								17,800	31,100	10,300	655	3350
1×40	20	4.5	M5	4.3	8	4.2	2	7,110	7,920	2,640	255	4080
2×40								10,600	13,200	4,400	385	4120
3×40								13,800	18,400	6,160	510	4160
4×40								16,800	23,700	7,920	635	4200
5×40								19,700	29,000	9,680	770	4240
6×40								22,400	34,300	11,400	905	4280
7×40								25,100	39,600	13,200	1,020	4320
8×40								27,600	44,800	14,900	1,160	4360
9×40								30,200	50,100	16,700	1,280	4400
10×40								32,600	55,400	18,400	1,410	4440
11×40								35,000	60,700	20,200	1,540	4480

1N≒0.102kgf

www.bergab.ru Берг АБ bergab@ya.ru Тел. (495)-228-06-21, факс (495) 223-3071

www.bergab.ru Берг АБ bergab@ya.ru Тел. (495)-228-06-21, факс (495) 223-3071

SV TYPE
–SV6／SV9–

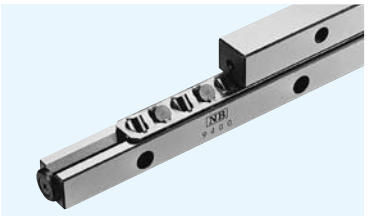

part number structure

example **SVS 6 200-RAS 16Z-UP**

- specification: **SV**: standard; **SVS**: anti-corrosion
- size
- rail length
- cage type: **blank**: standard cage; **RA**: aluminum cage standard roller; **RAS**: aluminum cage stainless steel roller
- number of rollers
- accuracy grade: **blank**: high; **P**: precision; **UP**: ultra precision

※Refer to page G-5 for information on cage types.

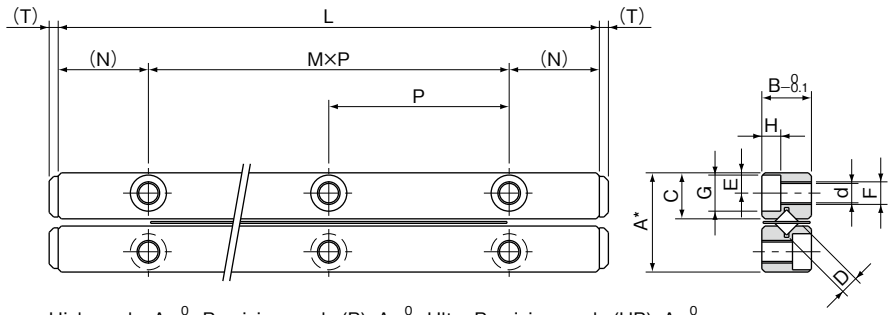

High grade: A-0.2 Precision grade (P): A-0.1 Ultra Precision grade (UP): A-0.1
One set consists of 4 rails, 2 roller cages, and 8 end pieces.

part number standard	part number anti-corrosion	stroke ST mm	roller diameter D mm	number of rollers Z	L mm	A mm	B mm	C mm
SV 6100-8Z	SVS 6100-8Z	55	6	8	100	31	15	14.2
6150-12Z	6150-12Z	85		12	150			
6200-16Z	6200-16Z	120		16	200			
6250-20Z	6250-20Z	150		20	250			
6300-24Z	6300-24Z	185		24	300			
6350-28Z	6350-28Z	215		28	350			
6400-32Z	6400-32Z	245		32	400			
6450-36Z	6450-36Z	280		36	450			
6500-40Z	6500-40Z	310		40	500			
6600-49Z	6600-49Z	360		49	600			
SV 9200-10Z	—	115	9	10	200	44	22	20.2
9300-15Z	—	175		15	300			
9400-20Z	—	235		20	400			
9500-25Z	—	295		25	500			
9600-30Z	—	355		30	600			
9700-35Z	—	415		35	700			
9800-40Z	—	475		40	800			
9900-45Z	—	535		45	900			
91000-50Z	—	595		50	1,000			

major dimensions M×P mm	N mm	E mm	F	d mm	G mm	H mm	T mm	basic load rating dynamic C N	static Co N	allowable load F N	mass g	size
1×50	25	6	M6	5.2	9.5	5.2	3	20,700	23,600	7,880	628	6100
2×50								28,500	35,500	11,800	942	6150
3×50								35,700	47,300	15,700	1,260	6200
4×50								42,500	59,200	19,700	1,570	6250
5×50								49,000	71,000	13,600	1,880	6300
6×50								55,300	82,800	27,600	2,200	6350
7×50								61,400	94,700	31,500	2,510	6400
8×50								67,300	106,000	35,400	2,830	6450
9×50								73,100	118,000	39,400	3,140	6500
11×50								84,200	142,000	47,300	3,770	6600
1×100	50	9	M8	6.8	10.5	6.2	4	60,900	70,700	23,500	2,720	9200
2×100								79,300	98,900	32,900	4,030	9300
3×100								104,000	141,000	47,000	5,380	9400
4×100								120,000	169,000	56,400	6,700	9500
5×100								143,000	212,000	70,500	8,050	9600
6×100								158,000	240,000	79,900	9,230	9700
7×100								180,000	282,000	94,000	10,500	9800
8×100								193,000	311,000	103,000	11,900	9900
9×100								214,000	353,000	117,000	13,000	91000

1N≒0.102kgf

※Maximum Rail Length (standard type only)

part number	Max. length
SV6	700mm

※Please contact NB for details.

www.bergab.ru Берг АБ bergab@ya.ru Тел. (495)-228-06-21, факс (495) 223-3071

www.bergab.ru Берг АБ bergab@ya.ru Тел. (495)-228-06-21, факс (495) 223-3071

SV TYPE
–SV12–

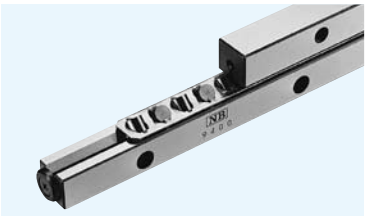

part number structure

example **SV 12 500 - 17Z - P**

- specification **SV**: standard
- size
- rail length
- number of rollers
- accuracy grade **blank**: high **P**: precision

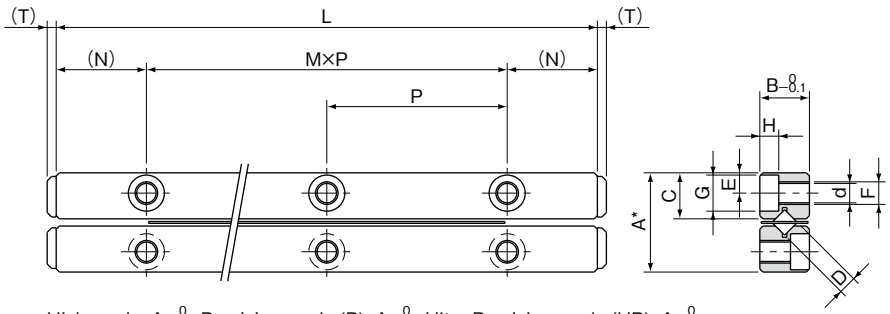

High grade: A-0.2 Precision grade (P): A-0.1 Ultra Precision grade (UP): A-0.1
One set consists of 4 rails, 2 roller cages, and 8 end pieces.

part number standard	part number anti-corrosion	stroke ST mm	roller diameter D mm	number of rollers Z	L mm	A mm	B mm	C mm
SV12300-10Z	—	200	12	10	300	58	28	27
12400-14Z	—	240		14	400			
12500-17Z	—	320		17	500			
12600-21Z	—	360		21	600			
12700-24Z	—	440		24	700			
12800-28Z	—	480		28	800			
12900-31Z	—	560		31	900			
121000-34Z	—	640		34	1,000			
121100-38Z	—	680		38	1,100			
121200-42Z	—	720		42	1,200			

major dimensions M×P mm	N mm	E mm	F	d mm	G mm	H mm	T mm	basic load rating dynamic C N	static Co N	allowable load F N	mass g	size
2×100	50	12	M10	8.5	13.5	8.2	4	124,000	145,000	48,300	6,880	12300
3×100								162,000	203,000	67,600	9,090	12400
4×100								180,000	232,000	77,200	11,400	12500
5×100								214,000	290,000	96,600	13,700	12600
6×100								247,000	348,000	115,000	15,800	12700
7×100								279,000	406,000	135,000	18,200	12800
8×100								294,000	435,000	144,000	20,500	12900
9×100								324,000	493,000	164,000	22,800	121000
10×100								354,000	551,000	183,000	25,000	121100
11×100								382,000	609,000	202,000	27,300	121200

1N≒0.102kgf

www.bergab.ru Берг АБ bergab@ya.ru Тел. (495)-228-06-21, факс (495) 223-3071

www.bergab.ru Берг АБ bergab@ya.ru Тел. (495)-228-06-21, факс (495) 223-3071

SVW TYPE

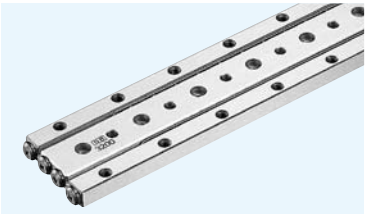

part number structure

example **SVWS 4 200-RAS 19Z-UP**

- specification
  - **SVW**: standard
  - **SVWS**: anti-corrosion
- size
- rail length
- cage type
  - **blank**: standard cage
  - **RA**: aluminum cage standard roller
  - **RAS**: aluminum cage stainless steel roller
- number of rollers
- accuracy grade
  - **blank**: high
  - **P**: precision
  - **UP**: ultra precision

※Refer to page G-5 for information on cage types.

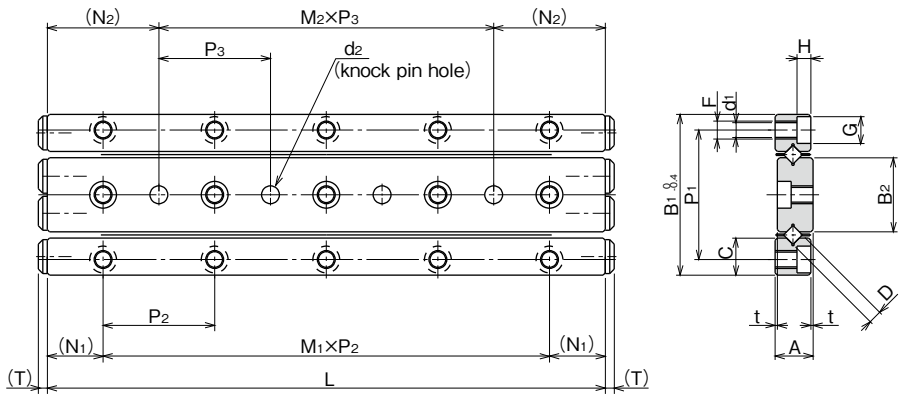

part number standard	part number anti-corrosion	stroke ST mm	roller diameter D mm	number of rollers Z	L mm	A mm	t mm	B_1 mm	B_2 mm	C mm	P_1 mm	$M_1 \times P_2$ mm
SVW 1020- 5Z	SVWS 1020- 5Z	12	1.5	5	20	4.5	0.5	17	7.6	3.8	13.4	1×10
1030- 7Z	1030- 7Z	20		7	30							2×10
1040-10Z	1040-10Z	27		10	40							3×10
1050-13Z	1050-13Z	32		13	50							4×10
1060-16Z	1060-16Z	37		16	60							5×10
1070-19Z	1070-19Z	42		19	70							6×10
1080-21Z	1080-21Z	50		21	80							7×10
SVW 2030- 5Z	SVWS 2030- 5Z	18	2	5	30	6.5	0.5	24	11	5.5	19	1×15
2045- 8Z	2045- 8Z	24		8	45							2×15
2060-11Z	2060-11Z	30		11	60							3×15
2075-13Z	2075-13Z	44		13	75							4×15
2090-16Z	2090-16Z	50		16	90							5×15
2105-18Z	2105-18Z	64		18	105							6×15
2120-21Z	2120-21Z	70		21	120							7×15
SVW 3050- 7Z	SVWS 3050- 7Z	28	3	7	50	8.5	0.5	36	16.6	8.3	29	1×25
3075-10Z	3075-10Z	48		10	75							2×25
3100-14Z	3100-14Z	58		14	100							3×25
3125-17Z	3125-17Z	78		17	125							4×25
3150-21Z	3150-21Z	88		21	150							5×25
3175-24Z	3175-24Z	105		24	175							6×25
3200-28Z	3200-28Z	115		28	200							7×25
SVW 4080- 7Z	SVWS 4080- 7Z	58	4	7	80	11.5	0.5	44	20.4	10.2	35	1×40
4120-11Z	4120-11Z	82		11	120							2×40
4160-15Z	4160-15Z	105		15	160							3×40
4200-19Z	4200-19Z	130		19	200							4×40
4240-23Z	4240-23Z	150		23	240							5×40
4280-27Z	4280-27Z	175		27	280							6×40

major dimensions N_1 mm	F	d_1 mm	G mm	H mm	$M_2 \times P_3$ mm	N_2 mm	d_2 mm	T mm	basic load rating dynamic C N	static Co N	allowable load F N	mass g	size
5	M2	1.65	3	1.4	—	10	$2^{+0.010}_{0}$	0.8	464	476	158	11	1020
					1×10				641	714	237	14	1030
					2×10				959	1,190	396	18	1040
					3×10				1,100	1,420	475	22	1050
					4×10				1,380	1,900	633	26	1060
					5×10				1,510	2,140	712	30	1070
					6×10				1,650	2,380	792	34	1080
7.5	M3	2.55	4.4	2	—	15	$3^{+0.010}_{0}$	2	1,090	1,170	390	28	2030
					1×15				1,900	2,340	780	42	2045
					2×15				2,270	2,930	976	55	2060
					3×15				2,620	3,510	1,170	69	2075
					4×15				3,280	4,680	1,560	83	2090
					5×15				3,590	5,270	1,750	96	2105
					6×15				3,900	5,860	1,950	110	2120
12.5	M4	3.3	6	3.1	—	25	$4^{+0.012}_{0}$	2	3,490	3,890	1,290	94	3050
					1×25				5,230	6,490	2,160	135	3075
					2×25				6,810	9,080	3,020	187	3100
					3×25				7,560	10,300	3,450	234	3125
					4×25				9,000	12,900	4,320	281	3150
					5×25				10,300	15,500	5,180	327	3175
					6×25				11,700	18,100	6,040	374	3200
20	M5	4.3	8	4.2	—	40	$5^{+0.012}_{0}$	2	7,110	7,920	2,640	255	4080
					1×40				10,600	13,200	4,400	385	4120
					2×40				13,800	18,400	6,160	510	4160
					3×40				16,800	23,700	7,920	635	4200
					4×40				19,700	29,000	9,680	770	4240
					5×40				22,400	34,300	11,400	905	4280

1N≒0.102kgf

www.bergab.ru Берг АБ bergab@ya.ru Тел. (495)-228-06-21, факс (495) 223-3071

www.bergab.ru Берг АБ bergab@ya.ru Тел. (495)-228-06-21, факс (495) 223-3071

NVT TYPE
−NVT2／NVT3／NVT4−

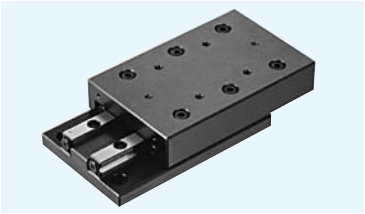

part number structure

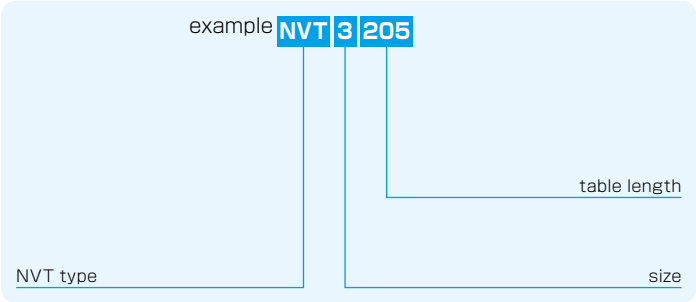

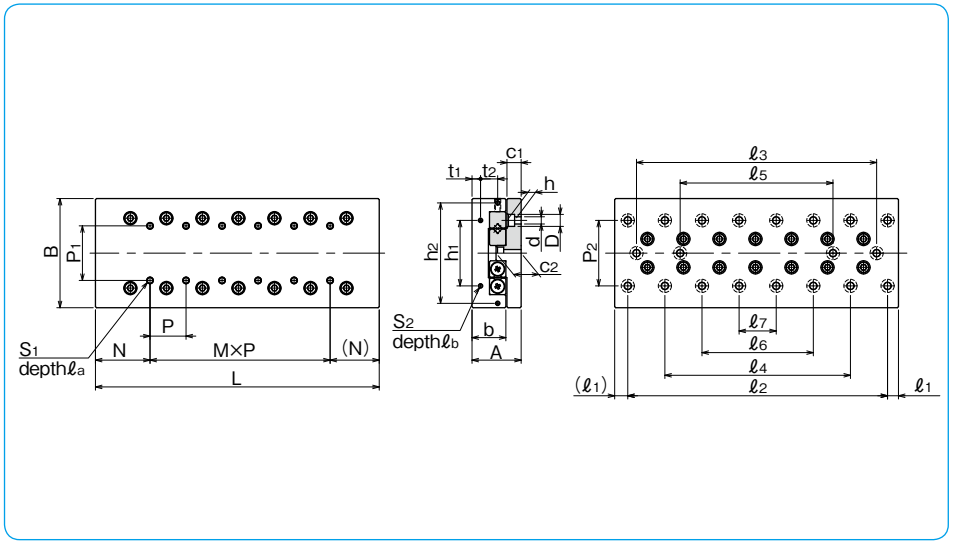

part number	stroke ST mm	major dimensions A mm	B mm	L mm	b mm	table-top mounting hole dimensions P1 mm	S1	ℓa mm	N mm	M×P mm	table-end mounting hole dimensions h1 mm	h2 mm	t1 mm	t2 mm	S2	ℓb mm	P2 mm	d×D×h mm
NVT2035	18			35						—								
2050	30			50						1×15								
2065	40			65						2×15								
2080	50			80						3×15								
2095	60			95						4×15								
2110	70	$21^{\pm0.1}$	$40^{-0.2}_{-0.4}$	110	14	15	M3	6	17.5	5×15	16	—	3.4	—	M2	6	30	3.5×6.5×3.5
2125	80			125						6×15								
2140	90			140						7×15								
2155	100			155						8×15								
2170	110			170						9×15								
2185	120			185						10×15								
NVT3055	30			55						—								
3080	45			80						1×25								
3105	60			105						2×25								
3130	75			130						3×25								
3155	90	$28^{\pm0.1}$	$60^{\pm0.1}$	155	18.5	25	M4	8	27.5	4×25	40	—	5.5	—	M3	6	40	4.5×8×4.5
3180	105			180						5×25								
3205	130			205						6×25								
3230	155			230						7×25								
NVT4085	50			85						—								
4125	75			125						1×40								
4165	105			165						2×40								
4205	130	$35^{\pm0.1}$	$80^{\pm0.1}$	205	24	40	M5	10	42.5	3×40	55	—	6.5	—	M3	6	55	5.5×10×5.4
4245	155			245						4×40								
4285	185			285						5×40								

The basic static load rating is the value at the center of the stroke.

bed-surface mounting hole dimensions c1 mm	c2 mm	ℓ1 mm	ℓ2 mm	ℓ3 mm	ℓ4 mm	ℓ5 mm	ℓ6 mm	ℓ7 mm	accuracy ※(deviation) T μm	S μm	basic load rating dynamic C N	static Co N	allowable load F N	allowable static moment MP N・m	MY N・m	MR N・m	mass g	size
			25	—	—	—	—	—	2	4	1,360	1,520	509	10.1	8.8	13.7	200	2035
			40	—	—	—	—	—	2	4	2,330	3,050	1,010	18.9	18.7	21.1	287	2050
			55	—	—	—	—	—	2	5	3,190	4,580	1,520	36.9	35.7	34.8	377	2065
			70	—	40	—	—	—	2	5	3,990	6,110	2,030	53.2	53.8	39.8	455	2080
			85	—	55	—	—	—	2	5	4,740	7,630	2,540	80.3	79.9	53.5	550	2095
6.5	10.9	5	100	—	70	—	—	—	3	6	5,460	9,160	3,050	104	106	58.4	640	2110
			115	—	85	—	—	—	3	6	6,160	10,600	3,560	130	135	63.4	730	2125
			130	—	100	—	70	—	3	6	6,830	12,200	4,070	171	176	77.1	810	2140
			145	—	115	—	85	—	3	6	8,130	15,200	5,090	235	244	90.9	890	2155
			160	—	130	—	100	—	3	7	8,750	16,800	5,600	275	289	95.8	980	2170
			175	—	145	—	115	85	3	7	9,370	18,300	6,110	317	338	100	1,070	2185
			35	—	—	—	—	—	2	5	6,150	8,060	2,680	13.3	34	21.2	643	3055
			60	—	—	—	—	—	2	5	8,440	12,100	4,030	122	117	134	960	3080
			85	—	—	—	—	—	3	6	10,500	16,100	5,370	178	181	148	1,260	3105
			110	—	—	—	—	—	3	6	14,400	24,200	8,060	275	310	162	1,580	3130
9	15	10	135	85	—	—	—	—	3	6	16,300	28,200	9,410	492	497	275	1,860	3155
			160	110	—	—	—	—	3	7	18,100	32,200	10,700	602	622	289	2,160	3180
			185	135	85	—	—	—	3	7	19,800	36,300	12,100	719	758	303	2,460	3205
			210	160	110	—	—	—	3	7	21,500	40,300	13,400	906	941	360	2,780	3230
			65	—	—	—	—	—	2	5	12,100	15,700	5,250	150	144	250	1,710	4085
			105	—	—	—	—	—	3	6	20,700	31,500	10,500	311	350	312	2,520	4125
			145	—	—	—	—	—	3	7	24,700	39,300	13,100	631	647	532	3,320	4165
10.5	18	10	185	105	—	—	—	—	3	7	32,100	55,100	18,300	1,250	1,240	847	4,130	4205
			225	145	—	—	—	—	3	7	39,000	70,900	23,600	1,700	1,770	909	4,930	4245
			265	185	—	—	—	—	3	7	42,400	78,700	26,200	2,330	2,380	1,120	5,730	4285

※For accuracy (T, S), refer to Figure G-18 (page G-25).

1N≒0.102kgf 1N・m≒0.102kgf・m

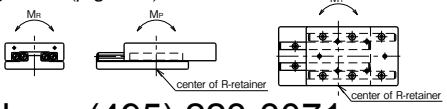

www.bergab.ru Берг АБ bergab@ya.ru Тел. (495)-228-06-21, факс (495) 223-3071

www.bergab.ru Берг АБ bergab@ya.ru Тел. (495)-228-06-21, факс (495) 223-3071

NVT TYPE
−NVT6／NVT9−

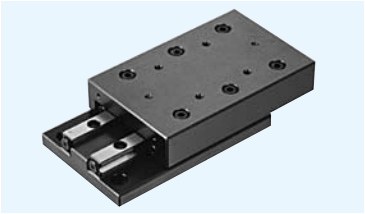

part number structure

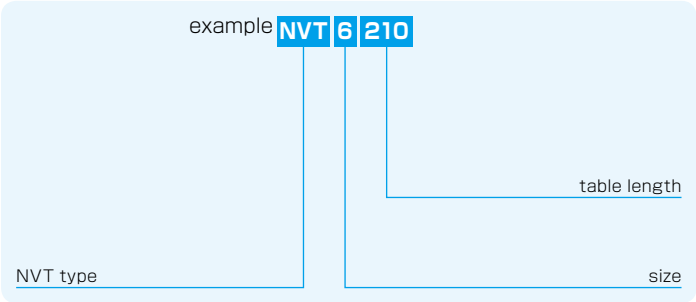

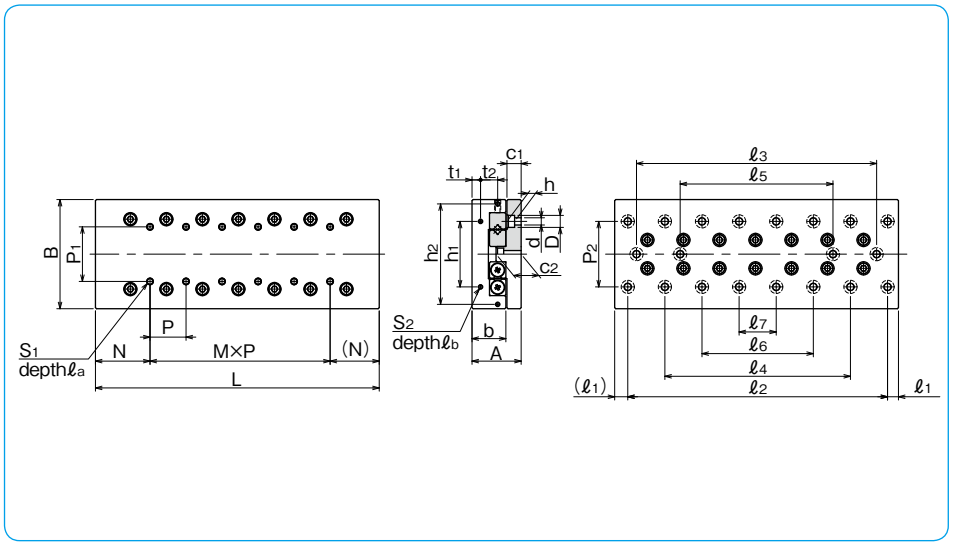

part number	stroke ST mm	major dimensions A mm	B mm	L mm	b mm	table-top mounting hole dimensions P1 mm	S1	ℓa mm	N mm	M×P mm	table-end mounting hole dimensions h1 mm	h2 mm	t1 mm	t2 mm	S2	ℓb mm	P2 mm	d×D×h mm
NVT6110	60			110						—								
6160	95			160						1×50								
6210	130			210						2×50								
6260	165	$45^{\pm0.1}$	$100^{\pm0.1}$	260	31	50	M6	12	55	3×50	60	92	8	15	M4	8	60	7×11.5×7
6310	200			310						4×50								
6360	235			360						5×50								
6410	265			410						6×50								
NVT9210	130			210						—								
9310	180	$60^{\pm0.1}$	$145^{\pm0.1}$	310	43	85	M8	16	105	1×100	90	135	11	20	M4	8	90	9×14×9
9410	220			410						2×100								
9510	300			510						3×100								

The basic static load rating is the value at the center of the stroke.

bed-surface mounting hole dimensions c1 mm	c2 mm	ℓ1 mm	ℓ2 mm	ℓ3 mm	ℓ4 mm	ℓ5 mm	ℓ6 mm	ℓ7 mm	accuracy ※(deviation) T μm	S μm	basic load rating dynamic C N	static Co N	allowable load F N	allowable static moment MP N・m	MY N・m	MR N・m	mass g	size
			90	—	—	—	—	—	3	6	29,600	37,500	12,500	216	303	343	3,300	6110
			140	—	—	—	—	—	3	6	40,700	56,300	18,700	937	927	995	4,850	6160
			190	90	—	—	—	—	3	7	60,600	93,900	31,300	1,950	1,980	1,410	6,310	6210
13	23	10	240	140	—	—	—	—	3	7	69,800	112,000	37,500	2,670	2,770	1,640	7,790	6260
			290	190	—	—	—	—	3	7	78,800	131,000	43,800	4,460	4,410	2,490	9,260	6310
			340	240	140	—	—	—	4	8	87,400	150,000	50,100	5,570	5,580	2,720	10,900	6360
			390	290	190	—	—	—	4	8	104,000	187,000	62,600	7,440	7,660	2,950	12,460	6410
			100	—	—	—	—	—	3	6	96,000	128,000	42,600	1,700	2,110	2,260	12,550	9210
16	29	55	200	—	—	—	—	—	3	6	143,000	213,000	71,100	6,560	6,580	5,330	18,000	9310
			300	100	—	—	—	—	3	7	186,000	298,000	99,500	12,600	12,700	7,770	24,010	9410
			400	200	—	—	—	—	3	7	206,000	341,000	113,000	18,700	18,600	10,200	30,100	9510

※For accuracy (T, S), refer to Figure G-18 (page G-25).

1N≒0.102kgf 1N・m≒0.102kgf・m

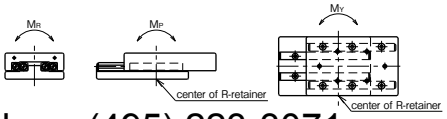

www.bergab.ru Берг АБ bergab@ya.ru Тел. (495)-228-06-21, факс (495) 223-3071

www.bergab.ru Берг АБ bergab@ya.ru Тел. (495)-228-06-21, факс (495) 223-3071

SVT TYPE
−SVT1/SVT2−

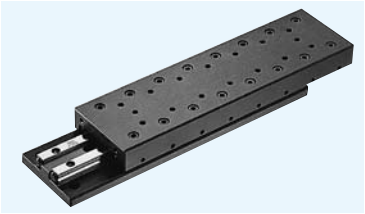

part number structure

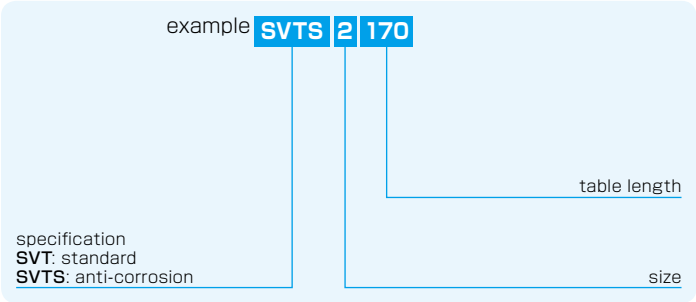

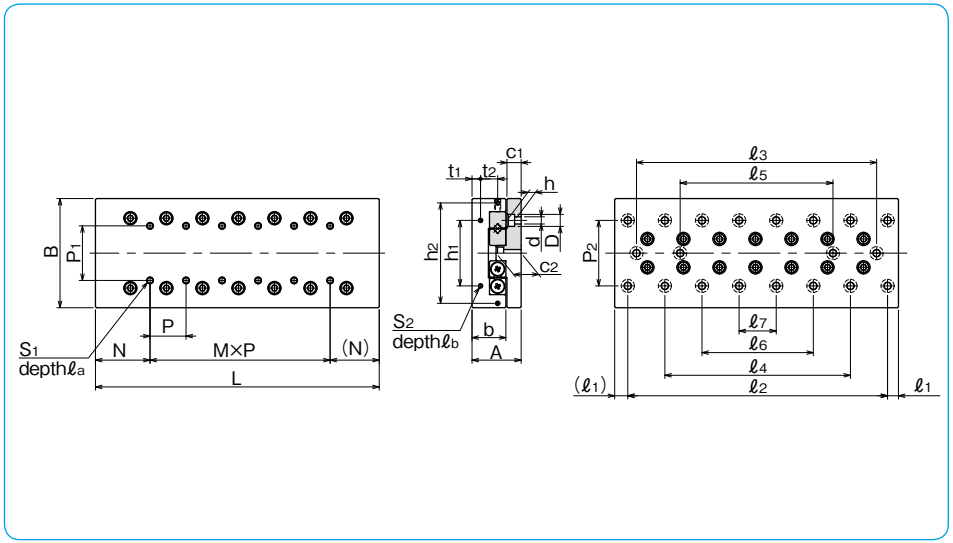

part number standard	part number anti-corrosion	stroke ST mm	major dimensions A mm	B mm	L mm	b mm	table-top mounting hole dimensions P1 mm	S1	ℓa mm	N mm	M×P mm	table-end mounting hole dimensions h1 mm	h2 mm	t1 mm	t2 mm	S2	ℓb mm
SVT 1025	SVTS 1025	12			25						—						
1035	1035	18			35						1×10						
1045	1045	25			45						2×10						
1055	1055	32	$17^{\pm0.1}$	$30^{-0.2}_{-0.4}$	55	11	10	M2	4	12.5	3×10	12	—	2.5	—	M2	6
1065	1065	40			65						4×10						
1075	1075	45			75						5×10						
1085	1085	50			85						6×10						
SVT 2035	SVTS 2035	18			35						—						
2050	2050	30			50						1×15						
2065	2065	40			65						2×15						
2080	2080	50			80						3×15						
2095	2095	60			95						4×15						
2110	2110	70	$21^{\pm0.1}$	$40^{-0.2}_{-0.4}$	110	14	15	M3	6	17.5	5×15	16	—	3.4	—	M2	6
2125	2125	80			125						6×15						
2140	2140	90			140						7×15						
2155	2155	100			155						8×15						
2170	2170	110			170						9×15						
2185	2185	120			185						10×15						

bed-surface mounting hole dimensions P2 mm	d×D×h mm	c1 mm	c2 mm	ℓ1 mm	ℓ2 mm	ℓ3 mm	ℓ4 mm	ℓ5 mm	ℓ6 mm	ℓ7 mm	accuracy ※(deviation) T μm	S μm	basic load rating dynamic C N	static Co N	allowable load F N	allowable static moment MP N・m	MY N・m	MR N・m	mass SVT g	SVTS g	size
					18	—	—	—	—	—	2	4	464	476	158	1.79	1.47	3.22	82	36	1025
					28	—	—	—	—	—	2	4	805	952	316	3.08	3.5	6.45	120	50	1035
					38	—	—	—	—	—	2	4	959	1,190	396	6.98	6.4	8.06	158	69	1045
22	2.5×4.5×2.5	5.5	9	3.5	48	—	28	—	—	—	2	5	1,100	1,420	475	9.53	8.81	9.68	190	83	1055
					58	—	38	—	—	—	2	5	1,240	1,660	554	12.4	11.6	11.2	225	98	1065
					68	—	48	—	—	—	2	5	1,510	2,140	712	19.3	18.3	14.5	260	113	1075
					78	—	58	—	—	—	2	5	1.650	2,380	792	23.4	22.3	16.1	295	128	1085
					25	—	—	—	—	—	2	4	1,090	1,170	390	7.04	5.78	10.5	195	90	2035
					40	—	—	—	—	—	2	4	1,510	1,750	585	12.1	10.7	15.8	280	133	2050
					55	—	—	—	—	—	2	5	1,900	2,340	780	19.1	17.1	21.1	370	175	2065
					70	—	40	—	—	—	2	5	2,620	3,510	1,170	27.4	29.6	31.6	450	220	2080
					85	—	55	—	—	—	2	5	2,950	4,100	1,360	37.4	39.9	36.9	540	250	2095
30	3.5×6.5×3.5	6.5	10.9	5	100	—	70	—	—	—	3	6	3,280	4,680	1,560	61.7	58.1	42.2	630	285	2110
					115	—	85	—	—	—	3	6	3,590	5,270	1,750	76.1	72.1	47.5	720	330	2125
					130	—	100	—	70	—	3	6	4,210	6,440	2,140	92	95.9	58.1	800	360	2140
					145	—	115	—	85	—	3	6	4,500	7,030	2,340	109	113	63.3	880	400	2155
					160	—	130	—	100	—	3	7	4,790	7,610	2,530	148	143	68.6	970	440	2170
					175	—	145	—	115	85	3	7	5,080	8,200	2,730	170	164	73.9	1,060	480	2185

※For accuracy (T, S), refer to Figure G-18 (page G-25).

1N≒0.102kgf 1N・m≒0.102kgf・m

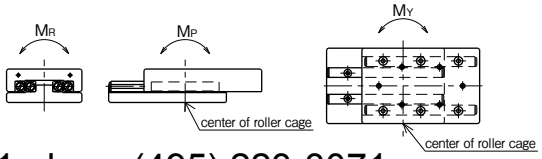

www.bergab.ru Берг АБ bergab@ya.ru Тел. (495)-228-06-21, факс (495) 223-3071

www.bergab.ru Берг АБ bergab@ya.ru Тел. (495)-228-06-21, факс (495) 223-3071

SVT TYPE
−SVT3/SVT4−

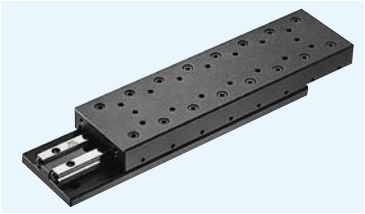

part number structure

example **SVTS 4 205**

- table length
- size
- specification
  - **SVT**: standard
  - **SVTS**: anti-corrosion

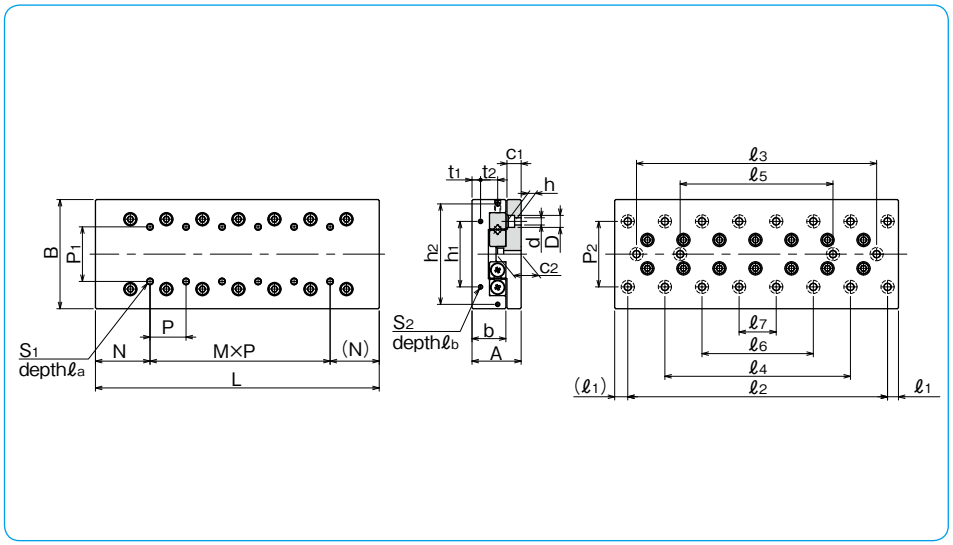

part number standard	part number anti-corrosion	stroke ST mm	major dimensions A mm	major dimensions B mm	major dimensions L mm	major dimensions b mm	table-top mounting hole dimensions P1 mm	table-top mounting hole dimensions S1	table-top mounting hole dimensions ℓa mm	table-top mounting hole dimensions N mm	table-top mounting hole dimensions M×P mm	table-end mounting hole dimensions h1 mm	table-end mounting hole dimensions h2 mm	table-end mounting hole dimensions t1 mm	table-end mounting hole dimensions t2 mm	table-end mounting hole dimensions S2	table-end mounting hole dimensions ℓb mm
SVT 3055	**SVTS 3055**	30			55						—						
3080	**3080**	45			80						1×25						
3105	**3105**	60			105						2×25						
3130	**3130**	75			130						3×25						
3155	**3155**	90	$28^{\pm0.1}$	$60^{\pm0.1}$	155	18.5	25	M4	8	27.5	4×25	40	—	5.5	—	M3	6
3180	**3180**	105			180						5×25						
3205	**3205**	130			205						6×25						
3230	**3230**	155			230						7×25						
3255	**3255**	180			255						8×25						
3280	**3280**	205			280						9×25						
3305	**3305**	230			305						10×25						
SVT 4085	**SVTS 4085**	50			85						—						
4125	**4125**	75			125						1×40						
4165	**4165**	105			165						2×40						
4205	**4205**	130			205						3×40						
4245	**4245**	155	$35^{\pm0.1}$	$80^{\pm0.1}$	245	24	40	M5	10	42.5	4×40	55	—	6.5	—	M3	6
4285	**4285**	185			285						5×40						
4325	**4325**	210			325						6×40						
4365	**4365**	235			365						7×40						
4405	**4405**	265			405						8×40						

bed-surface mounting hole dimensions P2 mm	d×D×h mm	c1 mm	c2 mm	ℓ1 mm	ℓ2 mm	ℓ3 mm	ℓ4 mm	ℓ5 mm	ℓ6 mm	ℓ7 mm	accuracy ※(deviation) T μm	accuracy ※(deviation) S μm	basic load rating dynamic C N	basic load rating static Co N	allowable load F N	allowable static moment MP N・m	allowable static moment MY N・m	allowable static moment MR N・m	mass SVT g	mass SVTS g	size
					35	—	—	—	—	—	2	5	3,490	3,890	1,290	19.4	22.2	54.5	640	300	**3055**
					60	—	—	—	—	—	2	5	5,230	6,490	2,160	53.0	58.0	90.9	955	440	**3080**
					85	—	—	—	—	—	3	6	6,030	7,780	2,590	103	95.7	109	1,250	580	**3105**
					110	—	—	—	—	—	3	6	7,560	10,300	3,450	170	160	145	1,570	715	**3130**
40	4.5×8×4.5	9	15	10	135	85	—	—	—	—	3	6	9,000	12,900	4,320	210	220	181	1,850	850	**3155**
					160	110	—	—	—	—	3	7	10,300	15,500	5,180	302	314	218	2,150	990	**3180**
					185	135	85	—	—	—	3	7	11,000	16,800	5,610	355	367	236	2,450	1,130	**3205**
					210	160	110	—	—	—	3	7	11,700	18,100	6,040	472	455	254	2,740	1,270	**3230**
					235	185	135	—	—	—	3	7	12,900	20,700	6,910	537	552	290	3,040	1,410	**3255**
					260	210	160	110	—	—	3	7	13,600	22,000	7,340	606	622	309	3,360	1,540	**3280**
					285	235	185	135	—	—	3	7	14,200	23,300	7,770	757	735	372	3,660	1,680	**3305**
					65	—	—	—	—	—	2	5	7,110	7,920	2,640	96.0	84.9	159	1,700	780	**4085**
					105	—	—	—	—	—	3	6	10,600	13,200	4,400	217	199	265	2,500	1,140	**4125**
					145	—	—	—	—	—	3	7	13,800	18,400	6,160	296	316	371	3,300	1,510	**4165**
					185	105	—	—	—	—	3	7	16,800	23,700	7,920	488	513	477	4,100	1,870	**4205**
55	5.5×10×5.4	10.5	18	10	225	145	—	—	—	—	3	7	19,700	29,000	9,680	729	759	584	4,900	2,240	**4245**
					265	185	—	—	—	—	3	7	22,400	34,300	11,400	1,010	1,050	690	5,700	2,600	**4285**
					305	225	145	—	—	—	4	8	25,100	39,600	13,200	1,350	1,390	796	6,500	3,000	**4325**
					345	265	185	—	—	—	4	8	27,600	44,800	14,900	1,730	1,780	902	7,300	3,300	**4365**
					385	305	225	—	—	—	4	8	28,900	47,500	15,800	2,160	2,100	955	8,100	3,700	**4405**

※For accuracy (T, S), refer to Figure G-18 (page G-25).

1N≒0.102kgf 1N・m≒0.102kgf・m

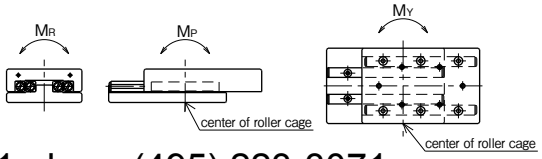

www.bergab.ru Берг АБ bergab@ya.ru Тел. (495)-228-06-21, факс (495) 223-3071

www.bergab.ru Берг АБ bergab@ya.ru Тел. (495)-228-06-21, факс (495) 223-3071

SVT TYPE
−SVT6／SVT9−

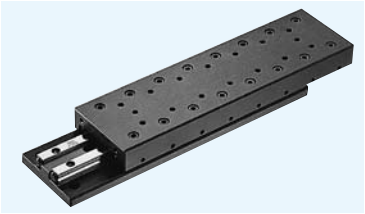

part number structure

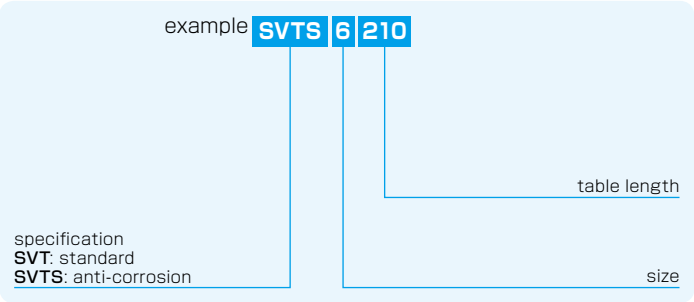

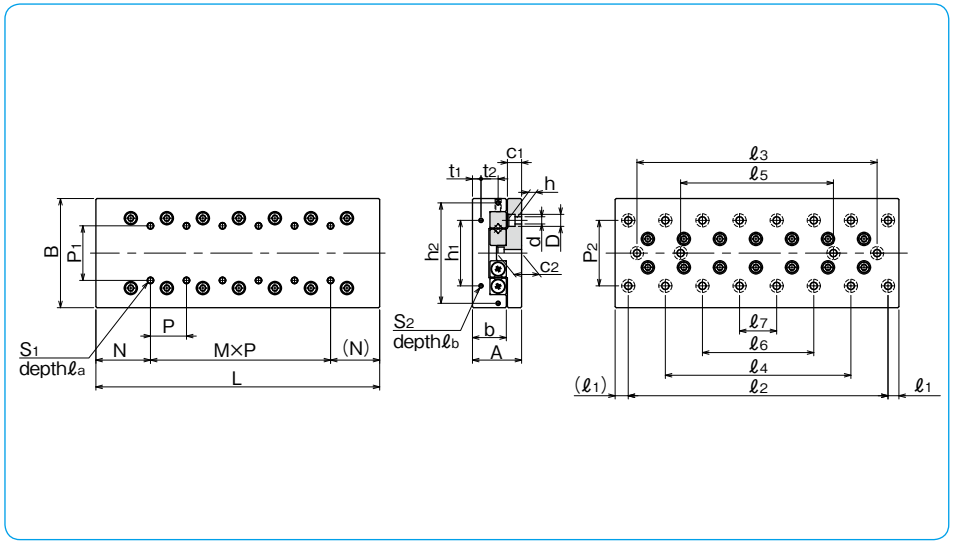

part number standard	part number anti-corrosion	stroke ST mm	major dimensions A mm	B mm	L mm	b mm	table-top mounting hole dimensions P1 mm	S1	ℓa mm	N mm	M×P mm	table-end mounting hole dimensions h1 mm	h2 mm	t1 mm	t2 mm	S2	ℓb mm
SVT 6110	SVTS 6110	60			110						—						
6160	6160	95			160						1×50						
6210	6210	130			210						2×50						
6260	6260	165			260						3×50						
6310	6310	200	$45^{\pm0.1}$	$100^{\pm0.1}$	310	31	50	M6	12	55	4×50	60	92	8	15	M4	8
6360	6360	235			360						5×50						
6410	6410	265			410						6×50						
6460	6460	300			460						7×50						
6510	6510	335			510						8×50						
SVT 9210	—	130			210						—						
9310	—	180			310						1×100						
9410	—	350			410						2×100						
9510	—	450			510						3×100						
9610	—	550	$60^{\pm0.1}$	$145^{\pm0.1}$	610	43	85	M8	16	105	4×100	90	135	11	20	M4	8
9710	—	650			710						5×100						
9810	—	750			810						6×100						
9910	—	850			910						7×100						
91010	—	950			1,010						8×100						

bed-surface mounting hole dimensions P2 mm	d×D×h mm	c1 mm	c2 mm	ℓ1 mm	ℓ2 mm	ℓ3 mm	ℓ4 mm	ℓ5 mm	ℓ6 mm	ℓ7 mm	accuracy ※(deviation) T μm	S μm	basic load rating dynamic C N	static Co N	allowable load F N	allowable static moment MP N・m	MY N・m	MR N・m	mass SVT g	SVTS g	size
					90	—	—	—	—	—	3	6	16,500	17,700	5,910	260	230	400	3,280	1,705	6110
					140	—	—	—	—	—	3	6	24,700	29,600	9,860	588	539	666	4,820	2,480	6160
					190	90	—	—	—	—	3	7	32,200	41,400	13,800	1,040	978	933	6,270	3,255	6210
					240	140	—	—	—	—	3	7	39,200	53,200	17,700	1,630	1,540	1,200	7,740	4,030	6260
60	7×11.5×7	13	23	10	290	190	—	—	—	—	3	7	45,800	65,100	21,600	2,340	2,240	1,460	9,200	4,805	6310
					340	240	140	—	—	—	4	8	52,200	76,900	25,600	2,750	2,850	1,730	10,740	5,580	6360
					390	290	190	—	—	—	4	8	58,400	88,800	29,500	3,660	3,770	2,000	12,190	6,355	6410
					440	340	240	—	—	—	4	8	64,400	100,000	33,500	4,700	4,830	2,260	13,800	7,130	6460
					490	390	290	190	—	—	4	8	70,200	112,000	37,400	5,870	6,010	2,530	15,300	7,905	6510
					100	—	—	—	—	—	3	7	51,100	56,500	18,800	1,610	1,440	2,030	12,520	—	9210
					200	—	—	—	—	—	3	7	79,300	98,900	32,900	3,150	3,360	3,560	17,950	—	9310
					300	100	—	—	—	—	4	8	79,300	98,900	32,900	4,110	3,840	3,560	23,950	—	9410
					400	200	—	—	—	—	4	8	96,600	127,000	42,300	6,420	6,080	4,580	30,090	—	9510
90	9×14×9	16	29	55	500	300	100	—	—	—	4	9	112,000	155,000	51,700	7,760	8,090	5,600	35,990	—	9610
					600	400	200	—	—	—	4	9	128,000	183,000	61,100	10,800	11,200	6,620	41,890	—	9710
					700	500	300	100	—	—	5	10	136,000	197,000	65,800	14,400	13,900	7,130	47,790	—	9810
					800	600	400	200	—	—	5	10	151,000	226,000	75,200	18,500	17,900	8,140	53,690	—	9910
					900	700	500	300	100	—	5	10	165,000	254,000	84,600	23,100	22,400	9,160	59,590	—	91010

※For accuracy (T, S), refer to Figure G-18 (page G-25).

1N≒0.102kgf 1N・m≒0.102kgf・m

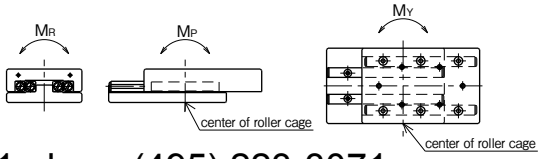

www.bergab.ru Берг АБ bergab@ya.ru Тел. (495)-228-06-21, факс (495) 223-3071

www.bergab.ru Берг АБ bergab@ya.ru Тел. (495)-228-06-21, факс (495) 223-3071

SYT TYPE
−SYT1/SYT2−

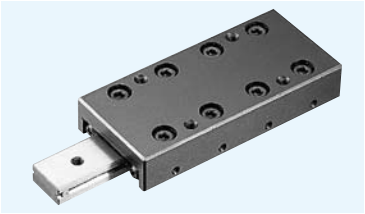

part number structure

example **SYTS 2 110**

- 110 — table length
- 2 — size
- SYTS — specification
  - SVT: standard
  - SVTS: anti-corrosion

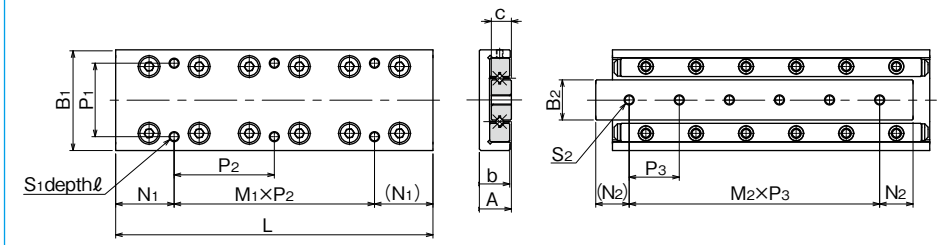

part number standard	part number anti-corrosion	stroke ST mm	A mm	B1 mm	L mm	b mm	B2 mm	c mm	P1 mm	S1	ℓ mm
SYT 1025	SYTS 1025	12	8±0.1	20±0.1	25	7.5	6.6	4	14	M2.6	3
1035	1035	18			35						
1045	1045	25			45						
1055	1055	32			55						
1065	1065	40			65						
1075	1075	45			75						
1085	1085	50			85						
SYT 2035	SYTS 2035	18	12±0.1	30±0.1	35	11.5	12	6	22	M3	5
2050	2050	30			50						
2065	2065	40			65						
2080	2080	50			80						
2095	2095	60			95						
2110	2110	70			110						
2125	2125	80			125						

N1 mm	M1×P2 mm	S2	N2 mm	M2×P3 mm	accuracy ※(deviation) T μm	S μm	basic load rating dynamic C N	static Co N	allowable load F N	allowable static moment MP N・m	MY N・m	MR N・m	mass g	size
3.5	1×18	M2.6	5	2×7.5	2	4	464	476	158	1.79	1.47	1.79	22	1025
3.5	1×28		7.5	2×10	2	4	805	952	316	3.08	3.50	3.58	33	1035
12.5	1×20		7.5	3×10	2	5	959	1,190	396	6.98	6.40	4.48	42	1045
12.5	1×30		7.5	4×10	2	5	1,100	1,420	475	9.53	8.81	5.37	52	1055
12.5	2×20		7.5	5×10	2	5	1,240	1,660	554	12.4	11.6	6.27	63	1065
22.5	1×30		7.5	6×10	2	5	1,510	2,140	712	19.3	18.3	8.06	72	1075
12.5	2×30		7.5	7×10	2	5	1,650	2,380	792	23.4	22.3	8.96	83	1085
3.5	1×28	M3	7.5	1×20	2	4	1,090	1,170	390	7.04	5.78	7.63	79	2035
3.5	1×43		10	2×15	2	4	1,510	1,750	585	12.1	10.7	11.4	113	2050
17.5	1×30		10	3×15	2	5	1,900	2,340	780	19.1	17.1	15.2	150	2065
17.5	1×45		10	4×15	2	5	2,620	3,510	1,170	27.4	29.6	22.8	185	2080
17.5	2×30		10	5×15	2	5	2,950	4,100	1,360	37.4	39.9	26.7	215	2095
32.5	1×45		10	6×15	2	5	3,280	4,680	1,560	61.7	58.1	30.5	255	2110
17.5	2×45		10	7×15	2	5	3,590	5,270	1,750	76.1	72.1	34.3	295	2125

※For accuracy (T, S), refer to Figure G-18 (page G-25).

1N≒0.102kgf 1N・m≒0.102kgf・m

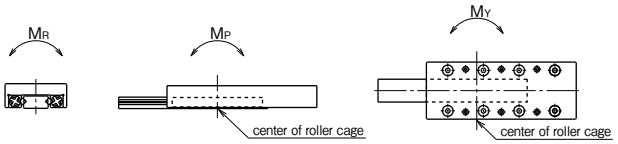

www.bergab.ru Берг АБ bergab@ya.ru Тел. (495)-228-06-21, факс (495) 223-3071

www.bergab.ru Берг АБ bergab@ya.ru Тел. (495)-228-06-21, факс (495) 223-3071

SYT TYPE
–SYT3–

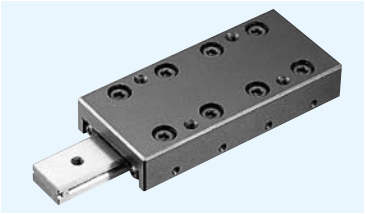

part number structure

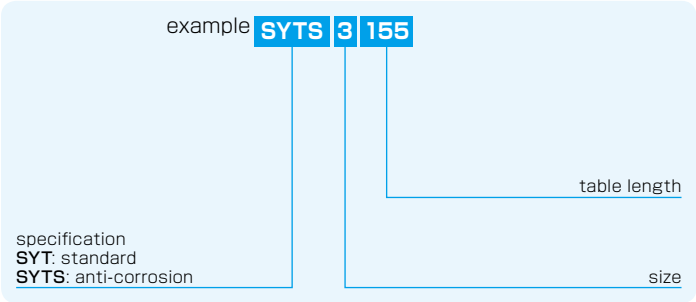

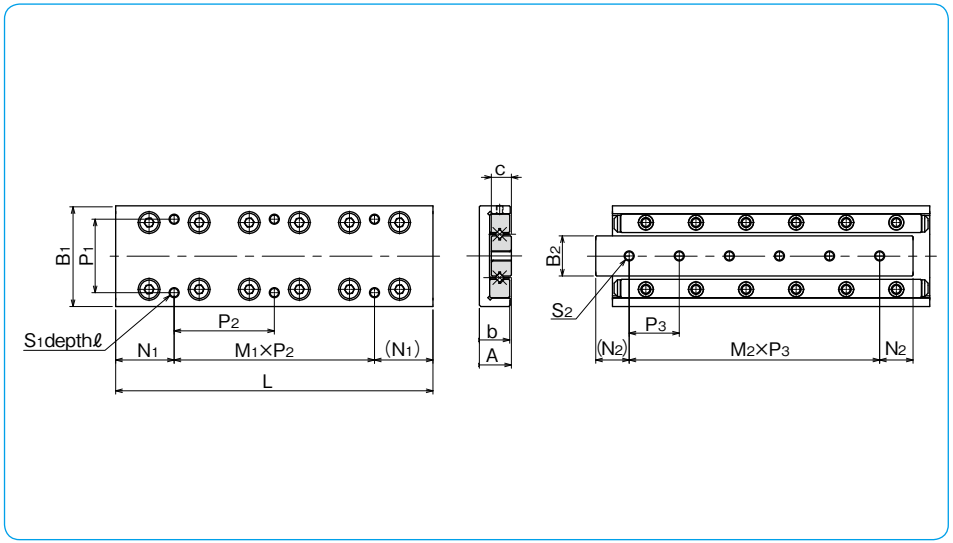

part number standard	part number anti-corrosion	stroke ST mm	A mm	B1 mm	L mm	b mm	B2 mm	c mm	table-top mounting hole dimensions P1 mm	S1	ℓ mm
SYT 3055	SYTS 3055	30	16±0.1	40±0.1	55	15.5	16	8	30	M4	7
3080	3080	45			80						
3105	3105	60			105						
3130	3130	75			130						
3155	3155	90			155						
3180	3180	105			180						
3205	3205	130			205						

N1 mm	M1×P2 mm	bed-surface mounting hole dimensions S2	N2 mm	M2×P3 mm	accuracy ※(deviation) T μm	S μm	basic load rating dynamic C N	static Co N	allowable load F N	allowable static moment MP N・m	MY N・m	MR N・m	mass g	size
7.5	1×40	M4	10	1×35	2	5	3,490	3,890	1,290	19.4	22.2	33.8	225	3055
7.5	1×65		15	2×25	2	5	5,230	6,490	2,160	53.0	58.0	56.4	340	3080
27.5	1×50		15	3×25	3	5	6,030	7,790	2,590	103	95.7	67.7	440	3105
27.5	1×75		15	4×25	3	5	7,560	10,300	3,450	170	160	90.3	560	3130
27.5	2×50		15	5×25	3	5	9,000	12,900	4,320	210	220	112	655	3155
52.5	1×75		15	6×25	3	5	10,300	15,500	5,180	302	314	135	770	3180
27.5	2×75		15	7×25	3	5	11,000	16,800	5,610	355	367	146	880	3205

※For accuracy (T, S), refer to Figure G-18 (page G-25).

1N≒0.102kgf 1N・m≒0.102kgf・m

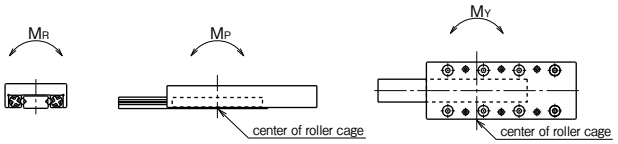

www.bergab.ru Берг АБ bergab@ya.ru Тел. (495)-228-06-21, факс (495) 223-3071

www.bergab.ru Берг АБ bergab@ya.ru Тел. (495)-228-06-21, факс (495) 223-3071

SYT-D TYPE
−SYT1／SYT2−

part number structure

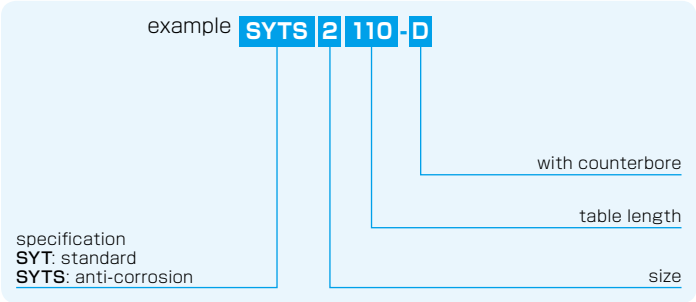

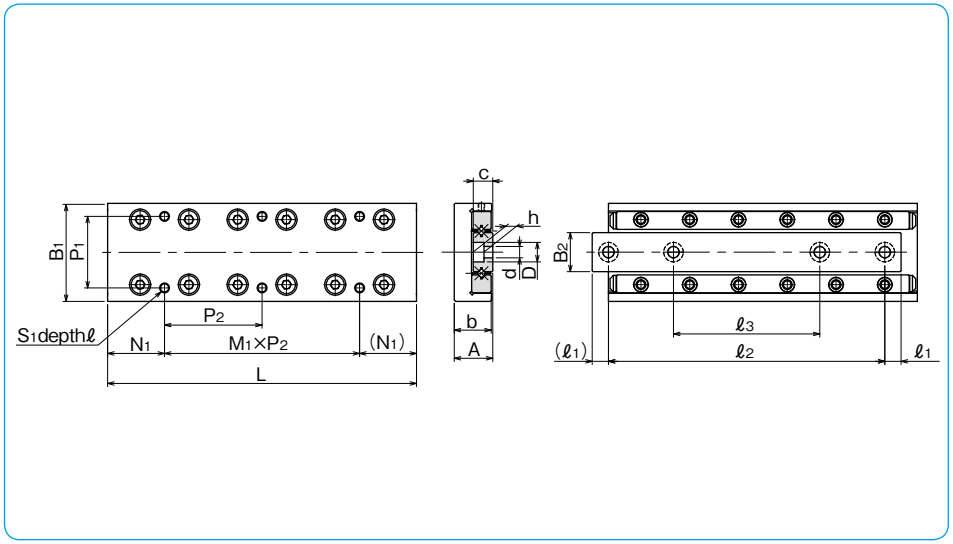

part number standard	part number anti-corrosion	stroke ST mm	major dimensions A mm	B1 mm	L mm	b mm	B2 mm	c mm	table-top mounting hole dimensions P1 mm	S1	ℓ mm	N1 mm
SYT1025-D	SYTS1025-D	12	8±0.1	20±0.1	25	7.5	6.6	4	14	M2.6	3	3.5
1035-D	1035-D	18			35							3.5
1045-D	1045-D	25			45							12.5
1055-D	1055-D	32			55							12.5
1065-D	1065-D	40			65							12.5
1075-D	1075-D	45			75							22.5
1085-D	1085-D	50			85							12.5
SYT2035-D	SYTS2035-D	18	12±0.1	30±0.1	35	11.5	12	6	22	M3	5	3.5
2050-D	2050-D	30			50							3.5
2065-D	2065-D	40			65							17.5
2080-D	2080-D	50			80							17.5
2095-D	2095-D	60			95							17.5
2110-D	2110-D	70			110							32.5
2125-D	2125-D	80			125							17.5

M1×P2 mm	bed-surface mounting hole dimensions d×D×h mm	ℓ1 mm	ℓ2 mm	ℓ3 mm	accuracy ※(deviation) T μm	S μm	basic load rating dynamic C N	static Co N	allowable load F N	allowable static moment MP N・m	MY N・m	MR N・m	mass g	size
1×18	2.5×4.1×2.2	3.5	18	—	2	4	464	476	158	1.79	1.47	1.79	22	1025
1×28		5	25	—	2	4	805	952	316	3.08	3.50	3.58	33	1035
1×20		3.5	38	25	2	5	959	1,190	396	6.98	6.40	4.48	42	1045
1×30		3.5	48	29	2	5	1,100	1,420	475	9.53	8.81	5.37	52	1055
2×20		5	55	31	2	5	1,240	1,660	554	12.4	11.6	6.27	63	1065
1×30		5	65	35	2	5	1,510	2,140	712	19.3	18.3	8.06	72	1075
2×30		5	75	40	2	5	1,650	2,380	792	23.4	22.3	8.96	83	1085
1×28	3.5×6×3.3	5	25	—	2	4	1,090	1,170	390	7.04	5.78	7.63	79	2035
1×43		7.5	35	—	2	4	1,510	1,750	585	12.1	10.7	11.4	113	2050
1×30		5	55	33	2	5	1,900	2,340	780	19.1	17.1	15.2	150	2065
1×45		5	70	40	2	5	2,620	3,510	1,170	27.4	29.6	22.8	185	2080
2×30		5	85	45	2	5	2,950	4,100	1,360	37.4	39.9	26.7	215	2095
1×45		7.5	95	50	2	5	3,280	4,680	1,560	61.7	58.1	30.5	255	2110
2×45		7.5	110	55	2	5	3,590	5,270	1,750	76.1	72.1	34.3	295	2125

※For accuracy (T, S), refer to Figure G-18 (page G-25).

1N≒0.102kgf 1N・m≒0.102kgf・m

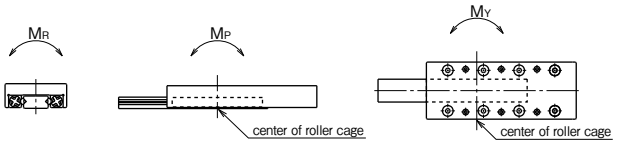

www.bergab.ru Берг АБ bergab@ya.ru Тел. (495)-228-06-21, факс (495) 223-3071

www.bergab.ru Берг АБ bergab@ya.ru Тел. (495)-228-06-21, факс (495) 223-3071

SYT-D TYPE
–SYT3–

part number structure

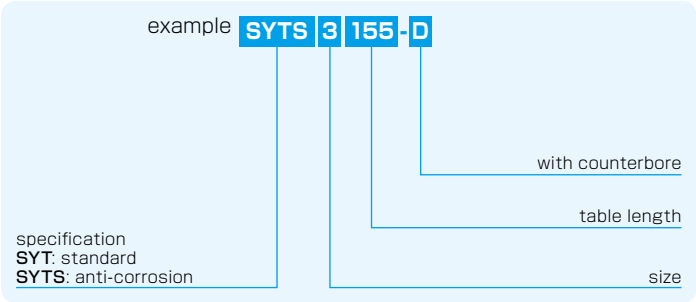

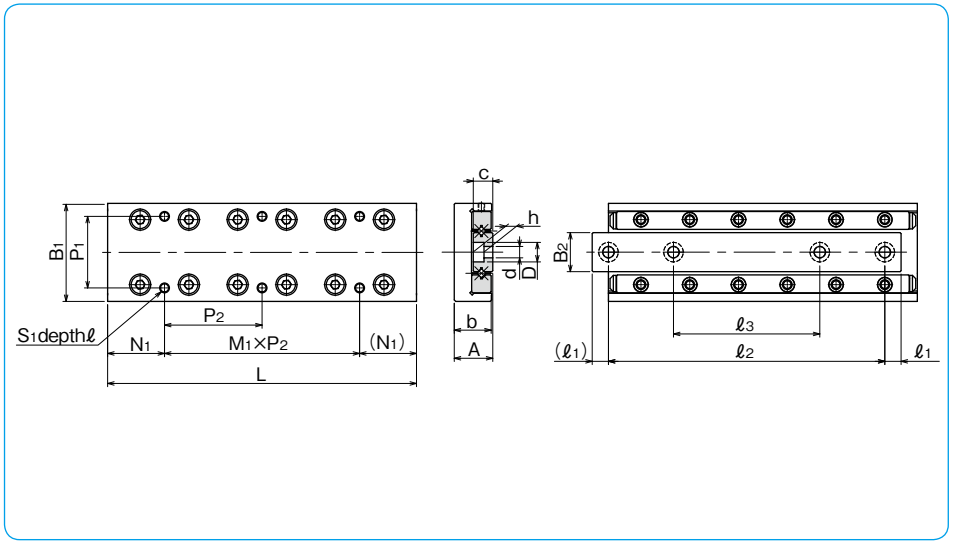

part number standard	part number anti-corrosion	stroke ST mm	major dimensions A mm	B1 mm	L mm	b mm	B2 mm	c mm	table-top mounting hole dimensions P1 mm	S1	ℓ mm	N1 mm
SYT3055-D	SYTS3055-D	30			55							7.5
3080-D	3080-D	45			80							7.5
3105-D	3105-D	60			105							27.5
3130-D	3130-D	75	$16^{\pm0.1}$	$40^{\pm0.1}$	130	15.5	16	8	30	M4	7	27.5
3155-D	3155-D	90			155							27.5
3180-D	3180-D	105			180							52.5
3205-D	3205-D	130			205							27.5

M1×P2 mm	bed-surface mounting hole dimensions d×D×h mm	ℓ1 mm	ℓ2 mm	ℓ3 mm	accuracy ※(deviation) T μm	S μm	basic load rating dynamic C N	static Co N	allowable load F N	allowable static moment MP N・m	MY N・m	MR N・m	mass g	size
1×40		7.5	40	—	2	5	3,490	3,890	1,290	19.4	22.2	33.8	225	3055
1×65		6	68	43	2	5	5,230	6,490	2,160	53.0	58.0	56.4	340	3080
1×50		7.5	90	55	3	5	6,030	7,780	2,590	103	95.7	67.7	440	3105
1×75	4.5×7.5×4.3	7.5	115	65	3	5	7,560	10,300	3,450	170	160	90.3	560	3130
2×50		7.5	140	95	3	5	9,000	12,900	4,320	210	220	112	655	3155
1×75		7.5	165	85	3	5	10,300	15,500	5,180	302	314	135	770	3180
2×75		7.5	190	90	3	5	11,000	16,800	5,610	355	367	146	880	3205

※For accuracy (T, S), refer to Figure G-18 (page G-25).

1N≒0.102kgf 1N・m≒0.102kgf・m

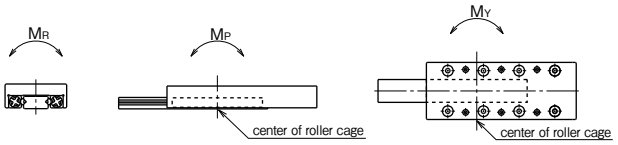

www.bergab.ru Берг АБ bergab@ya.ru Тел. (495)-228-06-21, факс (495) 223-3071

www.bergab.ru Берг АБ bergab@ya.ru Тел. (495)-228-06-21, факс (495) 223-3071

SYBS TYPE

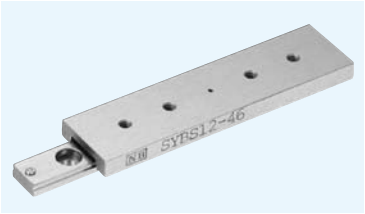

part number structure

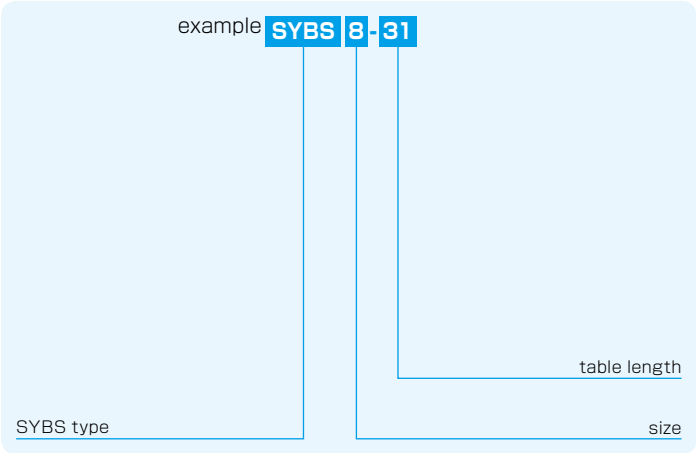

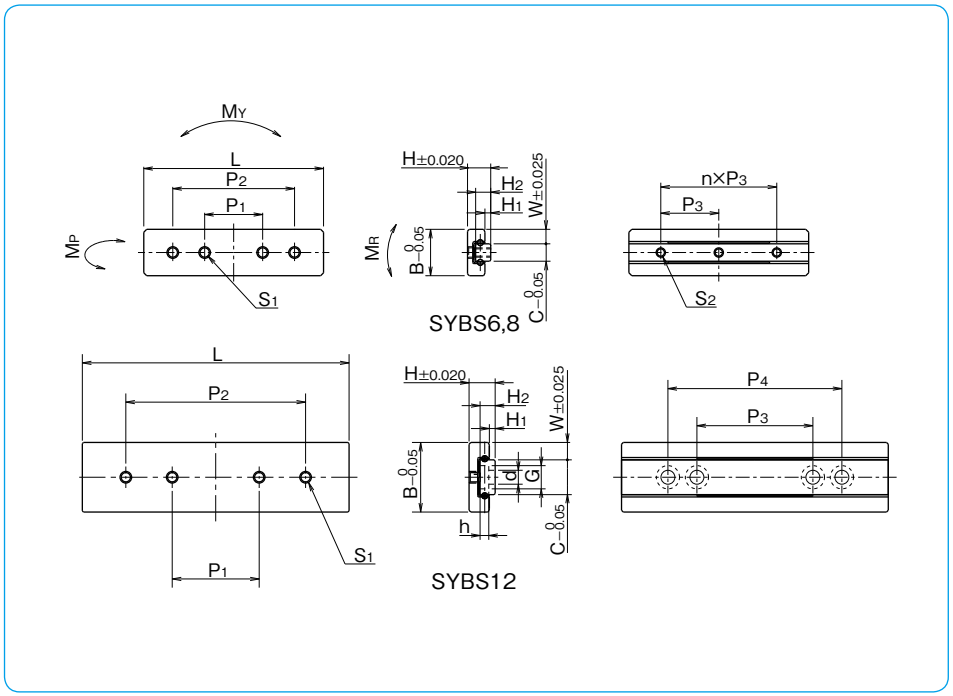

part number	major dimensions H mm	W mm	H1 mm	stroke mm	tabel-top dimensions B mm	L mm	P1 mm	P2 mm	S1	maximum screw penetration depth mm
SYBS 6−13	3.2	2	0.7	5	6	13	6.0	—	M1.4	0.5
SYBS 6−21				12		21	10.0	—		
SYBS 8−11	4	2.5	1	4	8	11	5.5	—	M2	0.7
SYBS 8−21				12		21	10.0	—		
SYBS 8−31				18		31	10.0	21		
SYBS12−23	4.5	3	1	12	12	23	8.0	—		1.2
SYBS12−31				18		31	15.0	—		
SYBS12−46				28		46	15.0	31		

※1: Custom mounting screws are provided with the SYBS-12 type only.
Other screw sizes are also available. (Please refer to page G-49)

bed-surface dimensions H2 mm	C mm	d×G×h mm	S2	P3 mm	n mm	P4 mm	basic load rating dynamic C N	static Co N	allowable load F N	allowable static moment MP N・m	MY N・m	MR N・m	mass g	size
2.0	2	—	M1	7	1	—	154	180	60.1	0.21	0.25	0.21	1.4	6−13
				7	2	—	229	315	105	0.57	0.69	0.37	2.2	6−21
2.6	3	—	M1.6	5	1	—	201	211	70.4	0.23	0.28	0.35	2.0	8−11
				10	1	—	368	493	164	1.02	1.22	0.83	3.7	8−21
				10	2	—	473	704	234	1.97	2.35	1.19	5.5	8−31
2.6	6	※1 2.4×4×1.5	—	15	1	—	404	563	187	1.30	1.55	1.80	7.6	12−23
				15	1	—	473	704	234	1.97	2.35	2.25	10.2	12−31
				20	—	30	658	1,120	375	4.80	5.72	3.60	15.2	12−46

1N≒0.102kgf 1N・m≒0.102kgf・m

www.bergab.ru Берг АБ bergab@ya.ru Тел. (495)-228-06-21, факс (495) 223-3071

www.bergab.ru Берг АБ bergab@ya.ru Тел. (495)-228-06-21, факс (495) 223-3071

RVF TYPE

– Gonio Way flat-installation-surface –

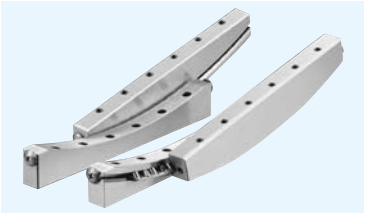

part number structure

example **RVF 3 100 - 125 - 16Z**

- RVF type
- size
- rail length
- radius from rotation center
- number of rollers

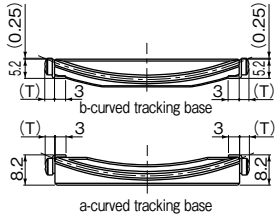

RVF2050-70-10Z
RVF2050-87-10Z

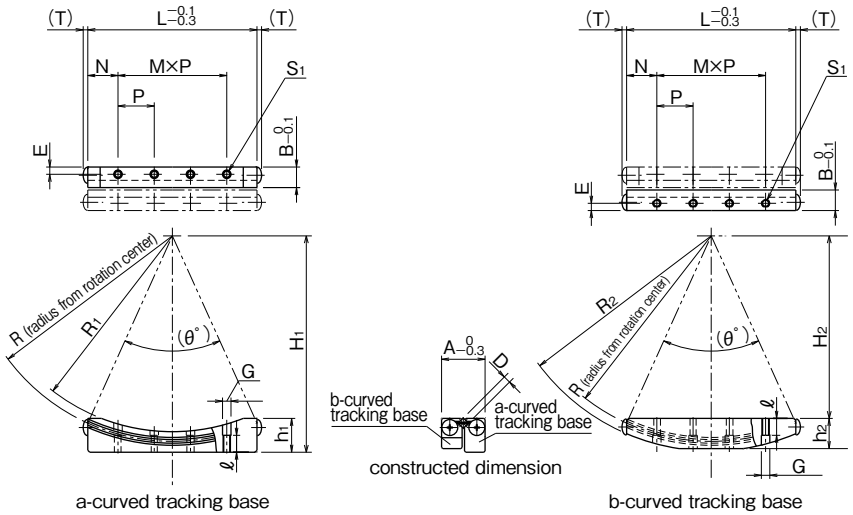

One set consists of 2 a-curved tracking bases, 2 b-curved tracking bases, 2 roller cages, 8 end pieces, and 2 edge reference plates.

part number	rotation range	roller diameter D mm	number of rollers Z	L mm	R mm	R1 mm	R2 mm	H1 mm	H2 mm	h1 mm	h2 mm	A mm	B mm
												major dimensions	
RVF2050- 70-10Z	± 5°	2	10	50	70	67	73	72.5	64.5	7.5	7.5	15	7.25
RVF2050- 87-10Z			10		87	84	89.5	89.5	81.5	7.5	7.5		
RVF2050-103-10Z			10		103	100	106	105.5	97.5	7.5	8		
RVF2050-120- 9Z			9		120	117	123	122.5	114.5	7.5	8		
RVF3070- 85-10Z	±10°	3	10	70	85	81	89	89.5	75.5	14	12.5	18	8.5
RVF3070-110-10Z			10		110	106	114	114.5	100.5	12.8	12.5		
RVF3100-125-16Z			16	100	125	121	129	129.5	110.5	17.5	18		8.5
RVF3100-160-14Z			14		160	156	164	164.5	145.5	15	18		

※ Please refer to page G-64 for information on cage types.

M×P mm	N mm	E mm	S1	ℓ mm	G mm	T mm	θ°	basic load rating dynamic C N	basic load rating static Co N	allowable load F N	mass g	part number
3×12.5	6.25	2.5	M2.5	4	3	2.7	41.8°	1,180	2,400	800	66	RVF2050- 70-10Z
							33.3°	1,060	2,430	810	70	RVF2050- 87-10Z
3×13	5.5					1.5	28.0°	998	2,440	815	70	RVF2050-103-10Z
							24.0°	751	1,970	657	70	RVF2050-120- 9Z
3×15	12.5	3	M3	7	3.5	1.9	48.6°	2,680	5,530	1,840	182	RVF3070- 85-10Z
							37.1°	2,440	5,620	1,870	182	RVF3070-110-10Z
5×15	12.5	3	M3	7	3.5	1.9	47.1°	3,520	8,850	2,950	327	RVF3100-125-16Z
							36.4°	2,860	7,890	2,630	323	RVF3100-160-14Z

1N≒0.102kgf

www.bergab.ru Берг АБ bergab@ya.ru Тел. (495)-228-06-21, факс (495) 223-3071

www.bergab.ru Берг АБ bergab@ya.ru Тел. (495)-228-06-21, факс (495) 223-3071

RV TYPE
— Gonio Way —

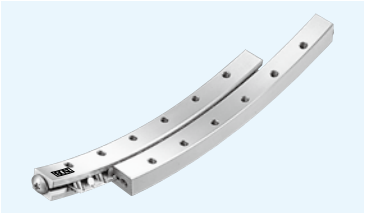

part number structure

example RV 3 070 - 110 - 10Z

- RV type
- size
- rail length
- radius from rotation center
- number of rollers

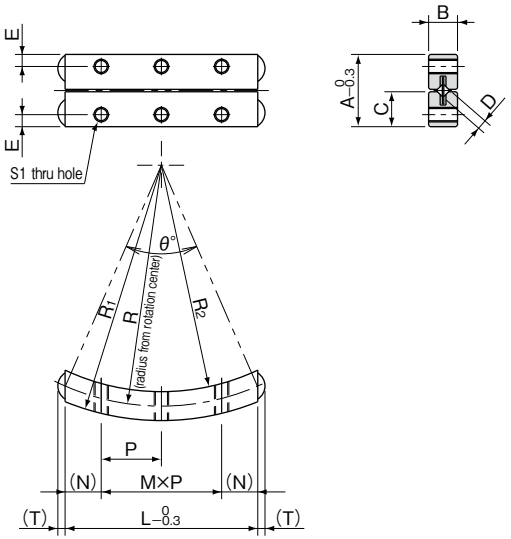

One set consists of 4 curved rails, 2 curved roller cages, and 8 end pieces.

part number	rotation range	roller diameter D mm	number of rollers Z	L mm	R mm	R_1 mm	R_2 mm	A mm	major dimensions B mm	C mm
RV2040- 50- 7Z	±10°	2	7	40	50	53	47	15	6	7.25
RV2060- 60-12Z			12	60	60	63	57			
RV3070- 90-11Z	±10°	3	11	70	90	94	86	18	8	8.5
RV3070-110-10Z			10	70	110	114	106			
RV3100-160-14Z			14	100	160	164	156			

※ Please refer to page G-64 for information on cage types.

M×P mm	N mm	E mm	S_1	T mm	θ°	basic load rating dynamic C N	basic load rating static Co N	allowable load F N	mass g	part number
2×12.5	7.5	2.5	M3	1.5	47.2°	820	1,440	482	49	RV2040- 50- 7Z
3×12.5	11.25				60.0°	1,490	2,800	936	75	RV2060- 60-12Z
3×15	12.5	3	M3	1.9	45.8°	2,640	5,550	1,850	137	RV3070- 90-11Z
3×15					37.1°	2,440	5,620	1,870	135	RV3070-110-10Z
5×15					36.4°	2,860	7,890	2,630	193	RV3100-160-14Z

1N≒0.102kgf

www.bergab.ru Берг АБ bergab@ya.ru Тел. (495)-228-06-21, факс (495) 223-3071

www.bergab.ru Берг АБ bergab@ya.ru Тел. (495)-228-06-21, факс (495) 223-3071

CR TYPE

– Standard Curved Roller Cage –

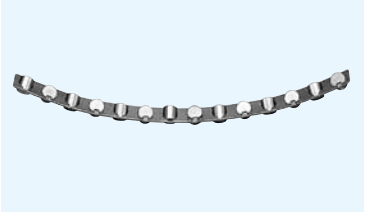

part number structure

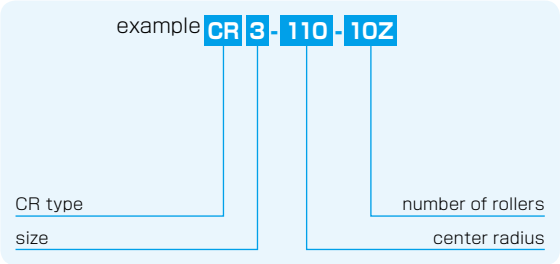

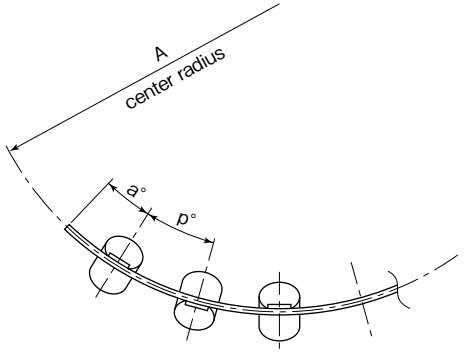

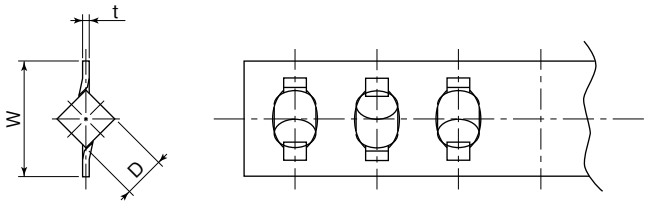

part number	roller diameter D mm	center radius A mm	t mm	w mm	p°	a°	applicable type
CR2- 50- 7Z	2	50	0.3	5.6	4.6°	2.9°	RV
CR2- 60-12Z		60			3.8°	2.4°	RV
CR2- 70-10Z		70			3.3°	2.0°	RVF
CR2- 87-10Z		87			2.6°	1.6°	RVF
CR2-103-10Z		103			2.2°	1.4°	RVF
CR2-120- 9Z		120			1.9°	1.2°	RVF
CR3- 85-10Z	3	85	0.4	7.2	3.4°	2.9°	RVF
CR3- 90-11Z		90			3.2°	1.9°	RV
CR3-110-10Z		110			2.6°	1.5°	RVF、RV
CR3-125-16Z		125			2.3°	1.3°	RVF
CR3-160-14Z		160			1.8°	1.0°	RVF、RV

www.bergab.ru Берг АБ bergab@ya.ru Тел. (495)-228-06-21, факс (495) 223-3071

www.bergab.ru Берг АБ bergab@ya.ru Тел. (495)-228-06-21, факс (495) 223-3071

ACTUATOR

www.bergab.ru Берг АБ bergab@ya.ru Тел. (495)-228-06-21, факс (495) 223-3071

www.bergab.ru Берг АБ bergab@ya.ru Тел. (495)-228-06-21, факс (495) 223-3071

ACTUATOR

NB's BG type is a compact single axis actuator which integrates a slide guide and precision ball screw. BG type offers compact dimensions and outperforms conventional positioning tables.
This is made possible by a unique "U" shaped guide rail and slide block which provides multiple functions of a guide block and a ball screw nut combined into a single unit. The "U" shaped guide rail offers high rigidity against bending moment. This structural feature allows for integrated framework of machinery or equipment and can be cantilevered. Additionally, the slide block contains 4 ball circuits which delivers high load capacity, high accuracy and high rigidity.

Figure H-1 Structure of BG type

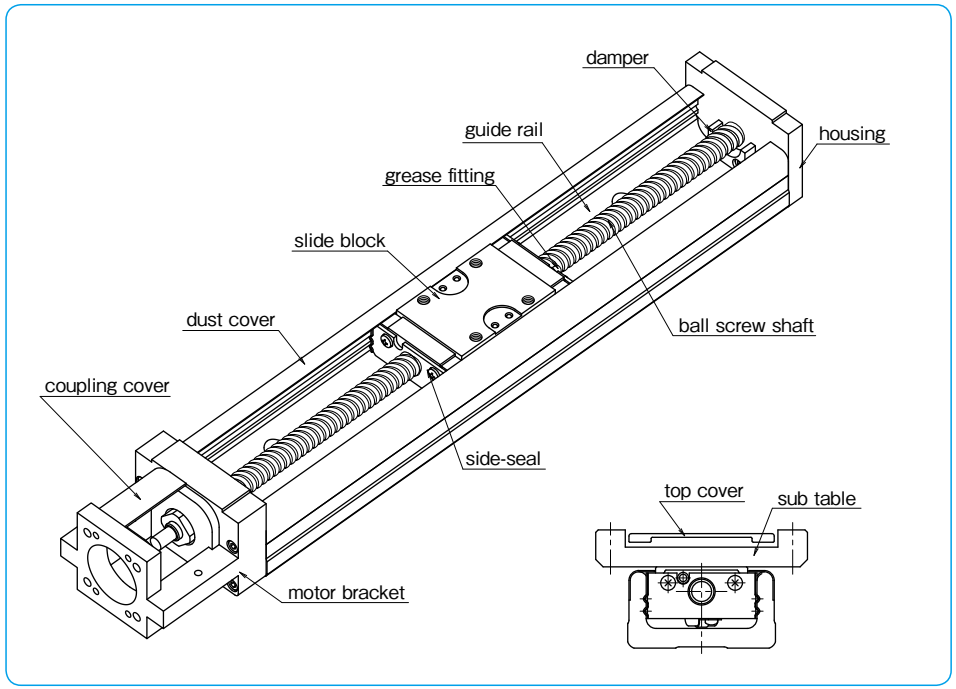

ADVANTAGES

Adjustment Free

The integration of the slide guide and precision ball screw eliminates complex precision adjustment and reduces installation time dramatically.

High Rigidity

"U" shaped guide rail provides very high rigidity despite its compact configuration and can be used for cantilevered application. (refer to page H-9)

High Accuracy

BG type contains four ball circuits and four-point contact ball grooves which contribute to its high rigidity. The combination of precision ground guide rail, slide block and precision ball screw provides high positioning accuracy.

Space Saving

In comparison to conventional positioning tables, the BG type allows for compact designs and dramatic space saving. The "U" shaped guide rail and integrated slide block and precision ball screw make this possible.

Figure H-2 Ball Contact Profile

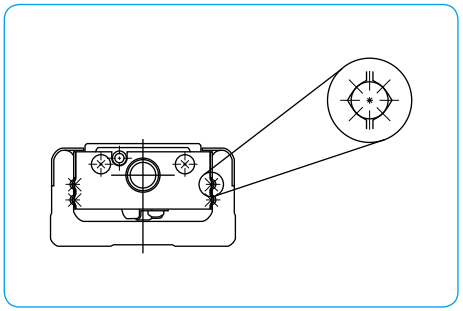

Figure H-3 Cross Section

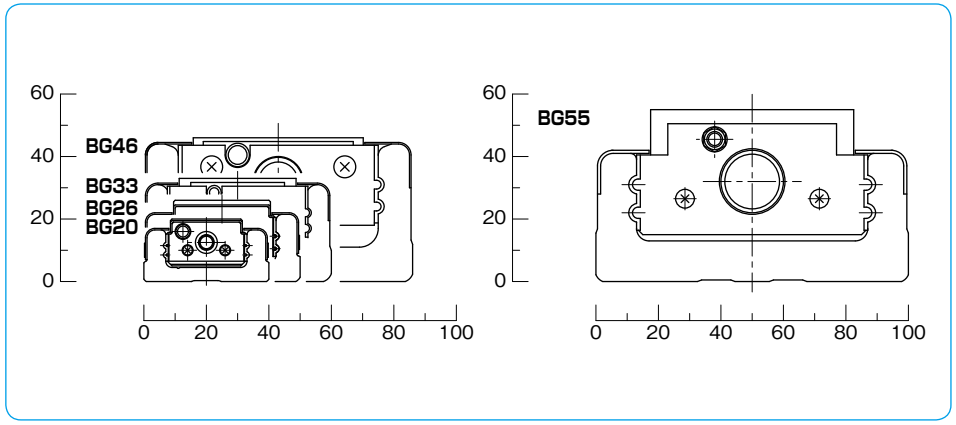

www.bergab.ru Берг АБ bergab@ya.ru Тел. (495)-228-06-21, факс (495) 223-3071

www.bergab.ru Берг АБ bergab@ya.ru Тел. (495)-228-06-21, факс (495) 223-3071

PART NUMBER STRUCTURE

Part number for BG type is described as follows.

①	②	③	④	⑤	⑥	⑦	⑧	⑨	⑩
BG	20	01	A	100	H	A0			
		05	B	150	P	A1	C	S	P△
				200		A3	J○○	K	G▲
						A5			LB
						A6			PNP
						A8			
						A9			
						AA			
						RO			

①	②	③	④	⑤	⑥	⑦	⑧	⑨	⑩
BG	26	02	A	150	H	A0			
		05	B	200	P	A1	C	S	P△
				250		A3	J○○	K	G▲
				300		A5			LB
						A6			PNP
						A8			
						A9			
						AA			
						RO			

①	②	③	④	⑤	⑥	⑦	⑧	⑨	⑩
BG	33	05	A	150	H	A0			
		10	B	200	P	A1	C	S	P△
		20	C	300		A2	J○○	H	G▲
			D	400		A3		K	LB
				500		A4			PNP
				600		A5			
						A6			
						A7			
						B1			
						B2			
						RO			
						RA□			
						RB□			
						RC□			

①	②	③	④	⑤	⑥	⑦	⑧	⑨	⑩
BG	46	10	A	340	H	A0			
		20	B	440	P	A1	C	S	P△
			C	540		A2	J○○	H	G▲
			D	640		A3		K	LB
				740		A4			PNP
				840		B0			
				940		C0			
				1040		D0			
				1140		R0			
				1240		RA□			
						RB□			
						RC□			

①	②	③	④	⑤	⑥	⑦	⑧	⑨	⑩
BG	55	20	A	980	H	A0			
			B	1080	P	A1	C	S	P△
				1180		A2	J○○	H	G▲
				1280		A3		K	LB
				1380		A4			PNP
						R0			

① BG type

② size

③ ball screw lead

④ type of block

A	1 long block
B	2 long blocks
C	1 short block
D	2 short blocks

※Drive block is located closest to motor bracket side.

⑤ guide rail length

⑥ precision grade

H	high grade
P	precision grade

⑦ motor bracket (refer to page H-17～)
The number in the square , □ ,after suffix RA , RB or RC indicates the mounting direction code.
(refer to page H-30, H-31)

⑧ cover and bellows

none	without top cover
C	with top cover + sub table
J○○	with bellows

○○ sensor cable outlet position
(refer to page H-45)

⑨ sensor

none	without sensor
S	with slim-type / compact photomicro sensor
H	with close contact capable photomicro sensor
K	with proximity sensor

⑩ option

none	without option
P△	with positioning pin hole (※1)
G▲	with grease option (※2)
LB	with low temperature black chrome treatment (※3)
PNP	with PNP sensor

In case of multiple options, add + between each option.
Example: (PS+LB+PNP)
※1: △ is S or W (refer to page H-53)
※2: ▲ is K, U, L or F (refer to page H-16)
Grease is applied to slide guide, ball screw, and angular bearings.
※3: LB is applied to steel parts except for aluminum parts and radial bearings.

SPECIFICATIONS

BG Type is categorized as either high grade (H) or precision grade (P).

Table H-1 Specifications

part number				BG2001		BG2005		BG2602		BG2605		BG3305		BG3310		BG3320		BG4610		BG4620		BG5520	
precision grade				high	※precision	high	※precision	high	※precision	high	※precision	high	precision	high	precision	high	precision	high	precision	high	precision	high	precision
guide	radial clearance		μm	−3~0	−6~−3	−3~0	−6~−3	−4~0	−8~−4	−4~0	−8~−4	−3~0	−7~−3	−3~0	−7~−3	−3~0	−7~−3	−5~0	−11~−5	−5~0	−11~−5	−6~0	−18~−6
guide	long block	basic dynamic load	C	kN	4.27		7.87		12.6				29.8				43.2						
guide	long block	basic static load	Co	kN	7.89		14.98		22.7				51.2				74.0						
guide	long block	allowable static moment	M_P	N·m	35		99		181				610				1,088						
guide	long block	allowable static moment	M_{2P}	N·m	199		550		1,035				3,285				5,465						
guide	long block	allowable static moment	M_Y	N·m	42		118		215				727				1,297						
guide	long block	allowable static moment	M_{2Y}	N·m	237		656		1,233				3,914				6,513						
guide	long block	allowable static moment	M_R	N·m	101		255		500				1,612				2,701						
guide	long block	allowable static moment	M_{2R}	N·m	201		509		1,000				3,224				5,402						
guide	short block	basic dynamic load	C	kN	—		—		7.8			—	19.9				—						
guide	short block	basic static load	Co	kN	—		—		11.4			—	28.8				—						
guide	short block	allowable static moment	M_P	N·m	—		—		49			—	207				—						
guide	short block	allowable static moment	M_{2P}	N·m	—		—		368			—	1,336				—						
guide	short block	allowable static moment	M_Y	N·m	—		—		59			—	246				—						
guide	short block	allowable static moment	M_{2Y}	N·m	—		—		439			—	1,593				—						
guide	short block	allowable static moment	M_R	N·m	—		—		250			—	907				—						
guide	short block	allowable static moment	M_{2R}	N·m	—		—		500			—	1,814				—						
ball screw	shaft diameter		mm	6			8		10			12				15				20			
ball screw	lead		mm	1		5		2		5		5		10		20		10		20		20	
ball screw	spacer-ball ratio		—	—				—				—	1:1	—	1:1	—	1:1	—	1:1	—	2:1	—	2:1
ball screw	basic dynamic load	Ca	kN	0.63		0.65		2.60		2.35		3.35	2.11	2.20	1.39	2.32	1.46	4.40	2.77	4.40	3.36	5.40	4.12
ball screw	basic static load	Coa	kN	1.34		0.92		3.64		3.30		5.90	2.95	3.50	1.75	4.05	2.02	7.90	3.95	7.90	5.27	10.5	7.00
bearing support	part number		—	AC5-14DF				AC6-16DF				70M8DF/GMP5						7001T2DF/GMP5				7002T2DF/GMP5	
bearing support	basic dynamic load	Cb	kN	1.31				1.79				4.40						6.77				7.74	
bearing support	basic static load	Cob	kN	1.25				1.76				4.36						7.45				9.50	

M_{2P} ,M_{2Y} and M_{2R} are the allowable static moments when 2 blocks are used in close contact.
※ Please contact NB when using BG20-P & BG26-P grade series with short and frequent stroke. (short stroke, BG2001: 7 mm or less, BG2005: 25 mm or less, BG2602: 14 mm or less and BG2605: 25 mm or less)
Short blocks are not available for BG3320.

Figure H-4 Direction of Moment

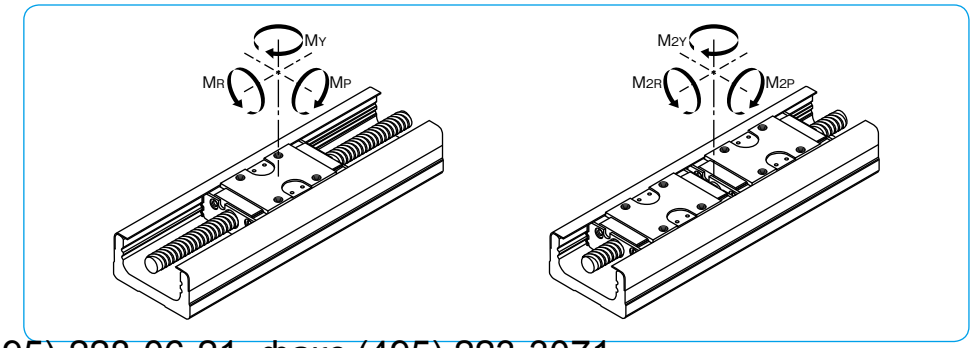

www.bergab.ru Берг АБ bergab@ya.ru Тел. (495)-228-06-21, факс (495) 223-3071

www.bergab.ru Берг АБ bergab@ya.ru Тел. (495)-228-06-21, факс (495) 223-3071

ALLOWABLE SPEED

Allowable speed of BG type is subject to the type of motor and operating conditions. The speed may also be limited by the critical speed of the ball screw. Use caution when operating at high speeds or using long rails.

Table H-2 Allowable Speed

part number	rail length mm	speed mm/sec
BG2001	100	187
	150	
	200	
BG2005	100	925
	150	
	200	
BG2602	150	281
	200	
	250	
	300	
BG2605	150	694
	200	
	250	
	300	
BG3305	150	550
	200	
	300	
	400	
	500	460
	600	310
BG3310	150	1,100
	200	
	300	
	400	
	500	930
	600	620
BG3320	150	1,500
	200	
	300	
	400	
	500	
	600	
BG4610	340	740
	440	
	540	
	640	
	740	650
	840	500
	940	390
	1,040	315
	1,140	260
	1,240	220
BG4620	340	1,480
	440	
	540	
	640	
	740	1,300
	840	1,000
	940	780
	1,040	630
	1,140	520
	1,240	440
BG5520	980	1,120
	1,080	910
	1,180	750
	1,280	630
	1,380	530

Figure H-5 Guide Rail Length and Allowable Speed

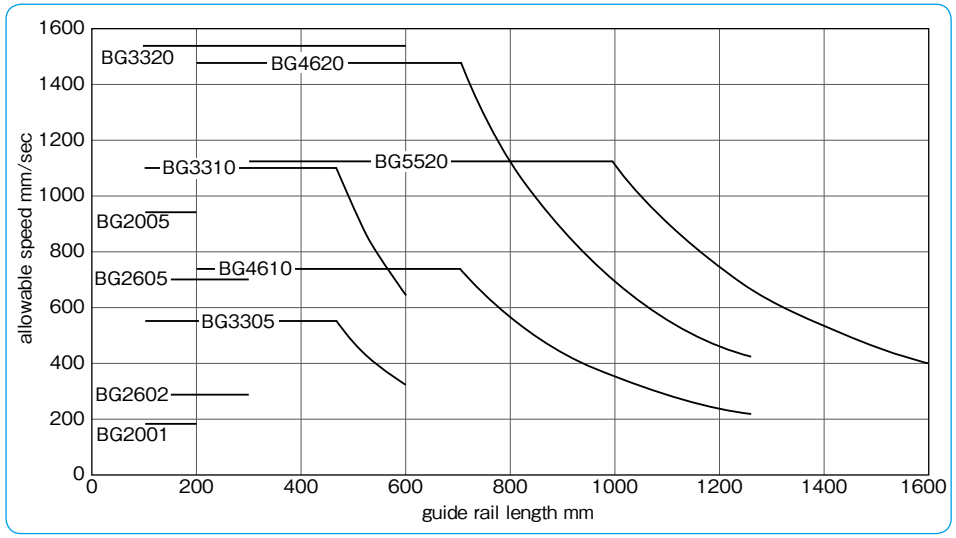

MASS

The mass of the BG type is listed in Table H-3 and slide block mass is listed in Table H-4.

Table H-3 Mass of BG type Actuator unit / kg

part number	rail length mm	without top cover				with top cover				rail length mm
		long block		short block		long block		short block		
		1 block A	2 blocks B	1 block C	2 blocks D	1 block A	2 blocks B	1 block C	2 blocks D	
BG20	100	0.45	0.52	—	—	0.50	0.61	—	—	100
	150	0.58	0.65	—	—	0.63	0.74	—	—	150
	200	0.71	0.78	—	—	0.77	0.88	—	—	200
BG26	150	0.93	1.10	—	—	1.07	1.31	—	—	150
	200	1.14	1.31	—	—	1.30	1.54	—	—	200
	250	1.36	1.53	—	—	1.53	1.78	—	—	250
	300	1.57	1.74	—	—	1.76	2.01	—	—	300
BG33	150	1.6	—	1.5	1.7	1.8	—	1.6	1.9	150
	200	2.0	—	1.8	2.0	2.1	—	2.0	2.2	200
	300	2.6	2.9	2.5	2.7	2.8	3.2	2.6	2.9	300
	400	3.2	3.6	3.1	3.3	3.5	3.9	3.3	3.5	400
	500	3.9	4.2	3.8	3.9	4.2	4.6	4.0	4.2	500
	600	4.6	4.9	4.4	4.6	4.9	5.3	4.7	4.9	600
BG46	340	6.5	7.5	6.0	6.5	7.0	8.0	6.5	7.0	340
	440	8.0	8.5	7.5	8.0	8.5	9.5	8.0	8.5	440
	540	9.0	10.0	8.5	9.5	10.0	11.0	9.5	10.0	540
	640	10.5	11.5	10.0	10.5	11.0	12.5	10.5	11.5	640
	740	12.0	13.0	11.5	12.0	12.5	14.0	12.0	13.0	740
	840	13.0	14.0	13.0	13.5	14.0	15.5	13.5	14.0	840
	940	14.5	15.5	14.0	14.5	15.5	16.5	15.0	15.5	940
	1,040	16.0	17.0	15.5	16.0	17.0	18.0	16.5	17.0	1,040
	1,140	17.5	18.0	17.0	17.5	18.5	19.5	18.0	18.5	1,140
	1,240	18.5	19.5	18.5	19.0	19.5	21.0	19.0	20.0	1,240
BG55	980	20	22	—	—	21	24	—	—	980
	1,080	22	24	—	—	23	26	—	—	1,080
	1,180	23	25	—	—	25	27	—	—	1,180
	1,280	25	27	—	—	27	29	—	—	1,280
	1,380	27	29	—	—	29	31	—	—	1,380

A: 1 long block B: 2 long blocks C: 1 short block D: 2 short blocks

Table H-4 Mass of Block unit / kg

part number	without top cover		with top cover	
	long block	short block	long block	short block
BG20	0.07	—	0.11	—
BG26	0.17	—	0.24	—
BG33	0.3	0.15	0.4	0.2
BG46	0.9	0.5	1.2	0.7
BG55	1.7	—	2.3	—

Mass stated "with top cover" includes mass of sub table.

www.bergab.ru Берг АБ bergab@ya.ru Тел. (495)-228-06-21, факс (495) 223-3071

www.bergab.ru Берг АБ bergab@ya.ru Тел. (495)-228-06-21, факс (495) 223-3071

INERTIA

Inertia of the slide block and ball screw of BG type are shown in Table H-5.

Table H-5 Inertia (reference) unit／kg・m²

part number	rail length mm	without top cover				with top cover				rail length mm
		long block		short block		long block		short block		
		1 block A	2 blocks B	1 block C	2 blocks D	1 block A	2 blocks B	1 block C	2 blocks D	
BG2001	100	1.34×10^{-7}	1.36×10^{-7}	—	—	1.35×10^{-7}	1.37×10^{-7}	—	—	100
	150	1.83×10^{-7}	1.85×10^{-7}	—	—	1.84×10^{-7}	1.87×10^{-7}	—	—	150
	200	2.33×10^{-7}	2.35×10^{-7}	—	—	2.34×10^{-7}	2.37×10^{-7}	—	—	200
BG2005	100	1.76×10^{-7}	2.21×10^{-7}	—	—	2.00×10^{-7}	2.69×10^{-7}	—	—	100
	150	2.26×10^{-7}	2.70×10^{-7}	—	—	2.50×10^{-7}	3.18×10^{-7}	—	—	150
	200	2.76×10^{-7}	3.20×10^{-7}	—	—	3.00×10^{-7}	3.68×10^{-7}	—	—	200
BG2602	150	6.08×10^{-7}	6.26×10^{-7}	—	—	6.16×10^{-7}	6.40×10^{-7}	—	—	150
	200	7.65×10^{-7}	7.83×10^{-7}	—	—	7.73×10^{-7}	7.97×10^{-7}	—	—	200
	250	9.22×10^{-7}	9.39×10^{-7}	—	—	9.29×10^{-7}	9.54×10^{-7}	—	—	250
	300	1.08×10^{-6}	1.10×10^{-6}	—	—	1.09×10^{-6}	1.11×10^{-6}	—	—	300
BG2605	150	6.99×10^{-7}	8.07×10^{-7}	—	—	7.44×10^{-7}	8.98×10^{-7}	—	—	150
	200	8.56×10^{-7}	9.63×10^{-7}	—	—	9.01×10^{-7}	1.05×10^{-6}	—	—	200
	250	1.01×10^{-6}	1.12×10^{-6}	—	—	1.06×10^{-6}	1.21×10^{-6}	—	—	250
	300	1.17×10^{-6}	1.28×10^{-6}	—	—	1.21×10^{-6}	1.37×10^{-6}	—	—	300
BG3305	150	1.64×10^{-6}	—	1.56×10^{-6}	1.64×10^{-6}	1.71×10^{-6}	—	1.60×10^{-6}	1.71×10^{-6}	150
	200	2.02×10^{-6}	—	1.94×10^{-6}	2.03×10^{-6}	2.09×10^{-6}	—	1.98×10^{-6}	2.10×10^{-6}	200
	300	2.79×10^{-6}	2.99×10^{-6}	2.71×10^{-6}	2.79×10^{-6}	2.86×10^{-6}	3.13×10^{-6}	2.75×10^{-6}	2.86×10^{-6}	300
	400	3.55×10^{-6}	3.75×10^{-6}	3.48×10^{-6}	3.56×10^{-6}	3.62×10^{-6}	3.89×10^{-6}	3.51×10^{-6}	3.63×10^{-6}	400
	500	4.32×10^{-6}	4.52×10^{-6}	4.24×10^{-6}	4.32×10^{-6}	4.39×10^{-6}	4.66×10^{-6}	4.28×10^{-6}	4.39×10^{-6}	500
	600	5.08×10^{-6}	5.28×10^{-6}	5.01×10^{-6}	5.09×10^{-6}	5.15×10^{-6}	5.42×10^{-6}	5.04×10^{-6}	5.16×10^{-6}	600
BG3310	150	2.19×10^{-6}	—	1.88×10^{-6}	2.21×10^{-6}	2.47×10^{-6}	—	2.02×10^{-6}	2.49×10^{-6}	150
	200	2.57×10^{-6}	—	2.27×10^{-6}	2.59×10^{-6}	2.85×10^{-6}	—	2.40×10^{-6}	2.87×10^{-6}	200
	300	3.34×10^{-6}	4.14×10^{-6}	3.03×10^{-6}	3.36×10^{-6}	3.61×10^{-6}	4.69×10^{-6}	3.17×10^{-6}	3.64×10^{-6}	300
	400	4.10×10^{-6}	4.90×10^{-6}	3.80×10^{-6}	4.12×10^{-6}	4.38×10^{-6}	5.46×10^{-6}	3.94×10^{-6}	4.40×10^{-6}	400
	500	4.87×10^{-6}	5.67×10^{-6}	4.56×10^{-6}	4.89×10^{-6}	5.15×10^{-6}	6.22×10^{-6}	4.70×10^{-6}	5.17×10^{-6}	500
	600	5.63×10^{-6}	6.43×10^{-6}	5.33×10^{-6}	5.65×10^{-6}	5.91×10^{-6}	6.99×10^{-6}	5.47×10^{-6}	5.93×10^{-6}	600
BG3320	150	5.94×10^{-6}	—	—	—	7.06×10^{-6}	—	—	—	150
	200	6.74×10^{-6}	—	—	—	7.85×10^{-6}	—	—	—	200
	300	8.33×10^{-6}	1.15×10^{-5}	—	—	9.44×10^{-6}	1.38×10^{-5}	—	—	300
	400	9.91×10^{-6}	1.31×10^{-5}	—	—	1.10×10^{-5}	1.53×10^{-5}	—	—	400
	500	1.15×10^{-5}	1.47×10^{-5}	—	—	1.26×10^{-5}	1.69×10^{-5}	—	—	500
	600	1.31×10^{-5}	1.63×10^{-5}	—	—	1.42×10^{-5}	1.85×10^{-5}	—	—	600
BG4610	340	1.79×10^{-5}	2.02×10^{-5}	1.69×10^{-5}	1.82×10^{-5}	1.87×10^{-5}	2.17×10^{-5}	1.74×10^{-5}	1.92×10^{-5}	340
	440	2.18×10^{-5}	2.41×10^{-5}	2.08×10^{-5}	2.20×10^{-5}	2.25×10^{-5}	2.56×10^{-5}	2.13×10^{-5}	2.31×10^{-5}	440
	540	2.57×10^{-5}	2.79×10^{-5}	2.46×10^{-5}	2.59×10^{-5}	2.64×10^{-5}	2.95×10^{-5}	2.52×10^{-5}	2.69×10^{-5}	540
	640	2.95×10^{-5}	3.18×10^{-5}	2.85×10^{-5}	2.98×10^{-5}	3.03×10^{-5}	3.33×10^{-5}	2.90×10^{-5}	3.08×10^{-5}	640
	740	3.34×10^{-5}	3.57×10^{-5}	3.24×10^{-5}	3.37×10^{-5}	3.42×10^{-5}	3.72×10^{-5}	3.29×10^{-5}	3.47×10^{-5}	740
	840	3.73×10^{-5}	3.96×10^{-5}	3.63×10^{-5}	3.75×10^{-5}	3.80×10^{-5}	4.11×10^{-5}	3.67×10^{-5}	3.83×10^{-5}	840
	940	4.12×10^{-5}	4.35×10^{-5}	4.02×10^{-5}	4.14×10^{-5}	4.19×10^{-5}	4.50×10^{-5}	4.06×10^{-5}	4.22×10^{-5}	940
	1,040	4.50×10^{-5}	4.74×10^{-5}	4.41×10^{-5}	4.53×10^{-5}	4.58×10^{-5}	4.88×10^{-5}	4.44×10^{-5}	4.61×10^{-5}	1,040
	1,140	4.89×10^{-5}	5.12×10^{-5}	4.79×10^{-5}	4.92×10^{-5}	4.97×10^{-5}	5.27×10^{-5}	4.83×10^{-5}	4.99×10^{-5}	1,140
	1,240	5.28×10^{-5}	5.51×10^{-5}	5.18×10^{-5}	5.30×10^{-5}	5.35×10^{-5}	5.66×10^{-5}	5.22×10^{-5}	5.38×10^{-5}	1,240
BG4620	340	2.47×10^{-5}	3.39×10^{-5}	2.07×10^{-5}	2.58×10^{-5}	2.78×10^{-5}	3.99×10^{-5}	2.27×10^{-5}	2.98×10^{-5}	340
	440	2.86×10^{-5}	3.77×10^{-5}	2.46×10^{-5}	2.96×10^{-5}	3.17×10^{-5}	4.38×10^{-5}	2.66×10^{-5}	3.37×10^{-5}	440
	540	3.25×10^{-5}	4.16×10^{-5}	2.84×10^{-5}	3.35×10^{-5}	3.55×10^{-5}	4.77×10^{-5}	3.05×10^{-5}	3.76×10^{-5}	540
	640	3.63×10^{-5}	4.55×10^{-5}	3.23×10^{-5}	3.74×10^{-5}	3.94×10^{-5}	5.16×10^{-5}	3.44×10^{-5}	4.14×10^{-5}	640
	740	4.03×10^{-5}	4.94×10^{-5}	3.62×10^{-5}	4.13×10^{-5}	4.33×10^{-5}	5.55×10^{-5}	3.82×10^{-5}	4.53×10^{-5}	740
	840	4.41×10^{-5}	5.34×10^{-5}	4.02×10^{-5}	4.51×10^{-5}	4.71×10^{-5}	5.93×10^{-5}	4.17×10^{-5}	4.82×10^{-5}	840
	940	4.80×10^{-5}	5.72×10^{-5}	4.41×10^{-5}	4.90×10^{-5}	5.09×10^{-5}	6.32×10^{-5}	4.56×10^{-5}	5.21×10^{-5}	940
	1,040	5.19×10^{-5}	6.11×10^{-5}	4.80×10^{-5}	5.29×10^{-5}	5.48×10^{-5}	6.71×10^{-5}	4.95×10^{-5}	5.59×10^{-5}	1,040
	1,140	5.57×10^{-5}	6.50×10^{-5}	5.18×10^{-5}	5.68×10^{-5}	5.87×10^{-5}	7.09×10^{-5}	5.34×10^{-5}	5.98×10^{-5}	1,140
	1,240	5.96×10^{-5}	6.89×10^{-5}	5.57×10^{-5}	6.06×10^{-5}	6.26×10^{-5}	7.48×10^{-5}	5.72×10^{-5}	6.37×10^{-5}	1,240
BG5520	980	1.46×10^{-4}	1.64×10^{-4}	—	—	1.52×10^{-4}	1.76×10^{-4}	—	—	980
	1,080	1.59×10^{-4}	1.76×10^{-4}	—	—	1.65×10^{-4}	1.88×10^{-4}	—	—	1,080
	1,180	1.71×10^{-4}	1.88×10^{-4}	—	—	1.77×10^{-4}	2.00×10^{-4}	—	—	1,180
	1,280	1.83×10^{-4}	2.00×10^{-4}	—	—	1.89×10^{-4}	2.12×10^{-4}	—	—	1,280
	1,380	1.95×10^{-4}	2.13×10^{-4}	—	—	2.01×10^{-4}	2.25×10^{-4}	—	—	1,380

RIGIDITY

By utilizing four-circuit and four-point contact structure, the BG type provides extremely high rigidity. Figure H-6 shows displacement of each size of long block against radial load. Table H-6 shows the geometrical moment of inertia of guide rails.

Figure H-6 Block Displacement against Radial Load

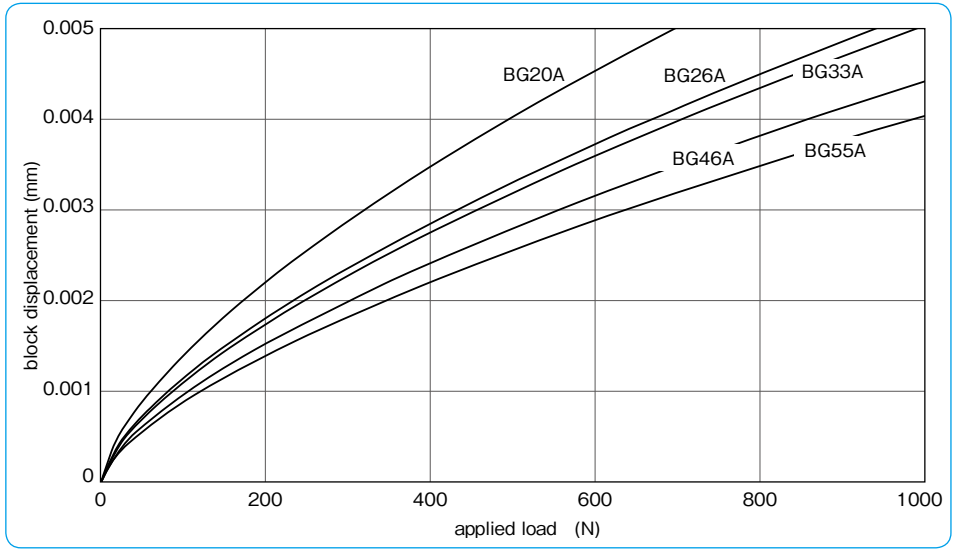

Table H-6 Geometrical Moment of Inertia of Guide Rail

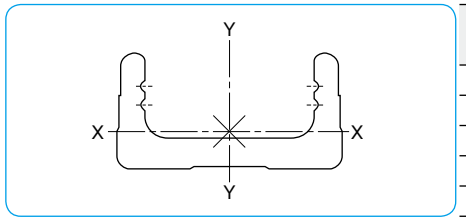

part number	geometrical moment of inertia (mm⁴) I_X (X Axis)	I_Y (Y Axis)	mass W (kg/100mm)
BG20	6.50×10^{3}	6.00×10^{4}	0.25
BG26	1.69×10^{4}	1.47×10^{5}	0.38
BG33	5.11×10^{4}	3.42×10^{5}	0.60
BG46	2.42×10^{5}	1.49×10^{6}	1.24
BG55	2.29×10^{5}	2.28×10^{6}	1.50

www.bergab.ru Берг АБ bergab@ya.ru Тел. (495)-228-06-21, факс (495) 223-3071

www.bergab.ru Берг АБ bergab@ya.ru Тел. (495)-228-06-21, факс (495) 223-3071

ACCURACY

Table H-7 shows accuracy of BG type.

Table H-7 Accuracy

part number	rail length mm	positioning repeatability high μm	positioning repeatability precision μm	positioning accuracy high μm	positioning accuracy precision μm	running parallelism B high μm	running parallelism B precision μm	backlash high μm	backlash precision μm	※starting torque high N・m	※starting torque precision N・m
BG20	100	±3	±1	50	20	25	10	5	2	0.01	0.012
	150										
	200										
BG26	150	±3	±1	50	20	25	10	5	2	0.015	0.04
	200										
	250										
	300										
BG33	150	±3 (±5)	±1 (±3)	30	15	25	10	5	2	0.07	0.15
	200										
	300			35	20						
	400										
	500			40	25	35	15				
	600		–	70	–		–		–		–
BG46	340	±3 (±5)	±1 (±3)	35	20	35	15	5	2	0.10	0.15
	440										
	540			40	25						
	640										0.17
	740			50	30	40	20				
	840		–	80	–	50	–		–		–
	940										
	1,040										
	1,140			100							
	1,240										
BG55	980	±3	±1	80	35	50	25	5	2	0.12	0.17
	1,080										
	1,180			100	40		30				0.20
	1,280		–		–		–		–		–
	1,380										

Above values are measured by using our selected motors.
※ Above specifications are based on using NB standard grease. Other grease may cause deviations.
The values in the parentheses are positioning repeatability when used with return pully unit.

Positioning Repeatability

After setting an arbitrary position, from one end, move the drive block to this position and measure the stop position. Repeat the positioning and measurement process 7 times with respect to the setting position at the midpoint and near both ends of travel. Take the maximum difference and divide it by 2, then indicate it with a positive and negative sign as the test result.

Positioning Repeatability

$$=\pm\frac{1}{2}((\text{maximum value of } \ell n)-(\text{minimum value of } \ell n))$$

Figure H-7 Positioning Repeatability

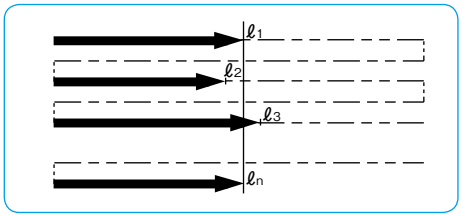

Positioning Accuracy

Positioning is performed in one direction and the resulting position is set as the datum point. Take the difference between the actual travel distance and the commanded travel distance from the datum point. Continuing in the same direction (without returning to the start point) repeat this process randomly several times until nearing to the stroke limit. Express the accuracy by the absolute maximum difference.

Positioning Accuracy $=(\Delta \ell n)_{max}$

Figure H-8 Positioning Accuracy

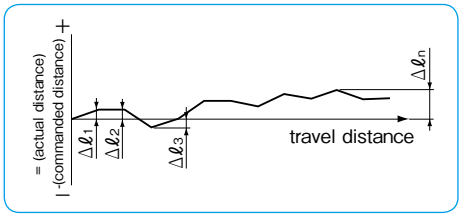

Running Parallelism B

After fixing the guide rail onto the surface plate, placing the dial test indicator on the center of the slide block and connecting the indicator probe onto the mounting surface, run the block over the entire travel distance. Take the maximum deviation in readings as the test result.

Figure H-9 Running Parallelism

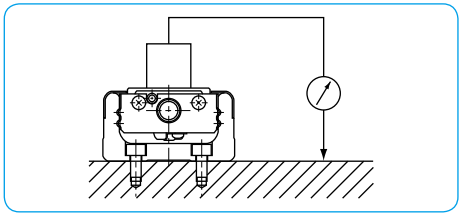

Backlash

Using the feed screw to move the slide block a little, take the dial test indicator reading and make it the datum point. While in this position, thrust the block by a certain force in the same direction without using the feed screw. Release the thrust and read the return, then take the difference from the datum point. Repeat the same process at the midpoint and near both ends of travel. Take the maximum difference as the test result.

Backlash $=\Delta \ell$

Figure H-10 Backlash

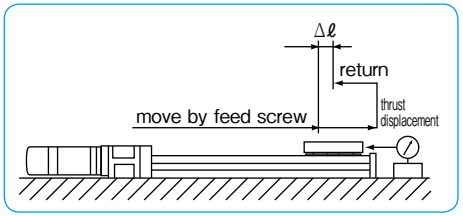

www.bergab.ru Берг АБ bergab@ya.ru Тел. (495)-228-06-21, факс (495) 223-3071

www.bergab.ru Берг АБ bergab@ya.ru Тел. (495)-228-06-21, факс (495) 223-3071

RATED LIFE

To obtain the rated life of the BG type, calculate the rated life of the guide portion, ball screw portion and support bearing portion. Use the minimum value as the rated life of the BG type.

A. Life of Guide Portion

Use the following equation for calculating the rated life of guide portion.

$$L_G=\left(\frac{f_C}{f_W}\cdot\frac{C}{P_T}\right)^3\cdot 50 \quad \cdots\cdots (1)$$

L_G: rated life (km) f_C: contact coefficient (refer to TableH-8)
f_W: applied load coefficient (refer to TableH-9)
C: basic dynamic load rating (N)
P_T: calculated load applied to one block (N)

A.1. Calculation of P_T

Before calculating the rated life using the equation (1), the calculated load applied to one block (P_T) needs to be obtained in consideration of the moment load, etc. that will be actually applied. For rapidly-accelerating or short stroke motion, P_T needs to be calculated with acceleration taken into consideration. The calculation of this acceleration will be carried out for the mass applied to BG. Obtain the calculated load during uniform motion, acceleration, and deceleration, and use the average value of the three as P_T.
For the calculation of P_T, select an appropriate equation depending on the installation conditions of the guide.
It is also possible to calculate P_T without including the effect of acceleration by using the equation "$P_T = P_{TC}$ (see the equations (2), (5), and (8)). In this case, however, the obtained value is a rough approximation, so a selection with sufficient margin is recommended.

Table H-8 Contact Coefficient (f_C)

number of blocks in close contact on one axis	contact coefficient (f_C)
1	1.0
2	0.81

Table H-9 Applied Load Coefficient (f_W)

operating conditions		applied load coefficient (f_W)
vibration, impact	velocity	
none	15m/min or less	1.0 ~ 1.5
low	60m/min or less	1.5 ~ 2.0
high	60m/min or more	2.0 ~ 3.5

Table H-10 Moment Equivalent Coefficient

	Ep (E2p)	Ey (E2y)	Er (E2r)
BG20**A	2.25×10^{-1}	1.89×10^{-1}	7.84×10^{-2}
BG20**B	3.98×10^{-2}	3.34×10^{-2}	3.92×10^{-2}
BG26**A	1.51×10^{-1}	1.27×10^{-1}	5.88×10^{-2}
BG26**B	2.72×10^{-2}	2.28×10^{-2}	2.94×10^{-2}
BG33**A	1.26×10^{-1}	1.06×10^{-1}	4.55×10^{-2}
BG33**B	2.20×10^{-2}	1.84×10^{-2}	2.27×10^{-2}
BG33**C	2.31×10^{-1}	1.94×10^{-1}	4.55×10^{-2}
BG33**D	3.09×10^{-2}	2.59×10^{-2}	2.27×10^{-2}
BG46**A	8.39×10^{-2}	7.04×10^{-2}	3.17×10^{-2}
BG46**B	1.56×10^{-2}	1.31×10^{-2}	1.59×10^{-2}
BG46**C	1.39×10^{-1}	1.17×10^{-1}	3.17×10^{-2}
BG46**D	2.15×10^{-2}	1.81×10^{-2}	1.59×10^{-2}
BG55**A	6.80×10^{-2}	5.71×10^{-2}	2.74×10^{-2}
BG55**B	1.35×10^{-2}	1.14×10^{-2}	1.37×10^{-2}

※The E2 coefficient is for two blocks being used in close contact.

A.1.a. P_T for Horizontal Move (Horizontal Mounting)

i) during uniform motion (P_{TC})

$$P_{TC}=\frac{1}{n}\cdot W+E_p\cdot M_{pL}+E_y\cdot M_{yL}+E_r\cdot M_{rL} \quad \cdots\cdots (2)$$

ii) during acceleration (P_{Ta})

$$P_{Ta}=\frac{1}{n}\cdot W+E_p(M_{pL}+m\cdot\alpha_a\cdot Z)+E_y(M_{yL}+m\cdot\alpha_a\cdot X)+E_r\cdot M_{rL} \quad \cdots\cdots (3)$$

Note that the values of ($M_{pL}+m\cdot\alpha_a\cdot Z$) and ($M_{yL}+m\cdot\alpha_a\cdot X$) will be treated as 0 (zero) when the calculated value is negative.

iii) during deceleration (P_{Td})

$$P_{Td}=\frac{1}{n}\cdot W+E_p(M_{pL}+m\cdot\alpha_d\cdot Z)+E_y(M_{yL}+m\cdot\alpha_d\cdot X)+E_r\cdot M_{rL} \quad \cdots\cdots (4)$$

Note that the values of ($M_{pL}+m\cdot\alpha_d\cdot Z$) and ($M_{yL}+m\cdot\alpha_d\cdot X$) will be treated as 0 (zero) when the calculated value is negative.

Figure H-11

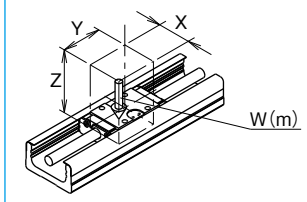

In case of load coming from different direction other than the direction shown in the drawing W(m), please contact NB.

P_{TC}: calculated load applied to a block during uniform motion (N) P_{Ta}: calculated load applied to a block during accelerating (N)
P_{Td}: calculated load applied to a block during decelerating (N) n: number of blocks of BG W: applied load (N) m: carrying mass (kg)
α_a: acceleration during accelerating (m/sec^2) α_d: acceleration during decelerating (m/sec^2) (the negative value)
X: distance between the center of BG and the center of the carrying mass (mm)
Y: distance between the center of BG and the center of the carrying mass (mm)
Z: distance between the center of BG ball screw and the center of the carrying mass (mm)
Ep: moment equivalent coefficient in the pitching direction (refer to Table H-10)
Ey: moment equivalent coefficient in the yawing direction (refer to Table H-10)
Er: moment equivalent coefficient in the rolling direction (refer to Table H-10)
M_{pL}: applied moment in the pitching direction (N・mm) $M_{pL}=W\cdot Y$
M_{yL}: applied moment in the yawing direction (N・mm) $M_{yL}=0$
M_{rL}: applied moment in the rolling direction (N・mm) $M_{rL}=W\cdot X$ ※Refer to Fig.H-4 for the direction of moment.

A.1.b. P_T for Horizontal Move (Wall Mounting)

i) during uniform motion (P_{TC})

$$P_{TC}=\frac{1}{1.19\cdot n}\cdot W+E_p\cdot M_{pL}+E_y\cdot M_{yL}+E_r\cdot M_{rL} \quad \cdots\cdots (5)$$

ii) during acceleration (P_{Ta})

$$P_{Ta}=\frac{1}{1.19\cdot n}\cdot W+E_p(M_{pL}+m\cdot\alpha_a\cdot Z)+E_y(M_{yL}+m\cdot\alpha_a\cdot X)+E_r\cdot M_{rL} \quad \cdots\cdots (6)$$

Note that the values of ($M_{pL}+m\cdot\alpha_a\cdot Z$) and ($M_{yL}+m\cdot\alpha_a\cdot X$) will be treated as 0 (zero) when the calculated value is negative.

iii) during deceleration (P_{Td})

$$P_{Td}=\frac{1}{1.19\cdot n}\cdot W+E_p(M_{pL}+m\cdot\alpha_d\cdot Z)+E_y(M_{yL}+m\cdot\alpha_d\cdot X)+E_r\cdot M_{rL} \quad \cdots\cdots (7)$$

Note that the values of ($M_{pL}+m\cdot\alpha_d\cdot Z$) and ($M_{yL}+m\cdot\alpha_d\cdot X$) will be treated as 0 (zero) when the calculated value is negative.

Figure H-12

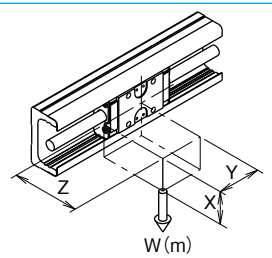

In case of load coming from different direction other than the direction shown in the drawing W(m), please contact NB.

P_{TC}: calculated load applied to a block during uniform motion (N) P_{Ta}: calculated load applied to a block during accelerating (N)
P_{Td}: calculated load applied to a block during decelerating (N) n: number of blocks of BG W: applied load (N) m: carrying mass (kg)
α_a: acceleration during accelerating (m/sec^2) α_d: acceleration during decelerating (m/sec^2) (the negative value)
X: distance between the center of BG and the center of the carrying mass (mm)
Y: distance between the center of BG and the center of the carrying mass (mm)
Z: distance between the center of BG ball screw and the center of the carrying mass (mm)
Ep: moment equivalent coefficient in the pitching direction (refer to Table H-10) Ey: moment equivalent coefficient in the yawing direction (refer to Table H-10) Er: moment equivalent coefficient in the rolling direction (refer to Table H-10)
M_{pL}: applied moment in the pitching direction (N・mm) $M_{pL}=0$
M_{yL}: applied moment in the yawing direction (N・mm) $M_{yL}=W\cdot Y$
M_{rL}: applied moment in the rolling direction (N・mm) $M_{rL}=W\cdot Z$ ※Refer to Fig. H-4 for the direction of moment.

www.bergab.ru Берг АБ bergab@ya.ru Тел. (495)-228-06-21, факс (495) 223-3071

www.bergab.ru Берг АБ bergab@ya.ru Тел. (495)-228-06-21, факс (495) 223-3071

A.1.c. P_T for Vertical Move

i) during uniform motion (P_{TC})

$$P_{TC}=Ep\cdot M_{pL}+Ey\cdot M_{yL}+Er\cdot M_{rL} \quad \cdots\cdots (8)$$

ii) during acceleration (P_{Ta})

$$P_{Ta}=Ep(M_{pL}+m\cdot\alpha_a\cdot Z)+Ey(M_{yL}+m\cdot\alpha_a\cdot X)+Er\cdot M_{rL} \quad \cdots\cdots (9)$$

Note that the values of $(M_{pL}+m\cdot\alpha_a\cdot Z)$ and $(M_{yL}+m\cdot\alpha_a\cdot X)$ will be treated as 0 (zero) when the calculated value is negative.

iii) during deceleration (P_{Td})

$$P_{Td}=Ep(M_{pL}+m\cdot\alpha_d\cdot Z)+Ey(M_{yL}+m\cdot\alpha_d\cdot X)+Er\cdot M_{rL} \quad \cdots\cdots (10)$$

Note that the values of $(M_{pL}+m\cdot\alpha_d\cdot Z)$ and $(M_{yL}+m\cdot\alpha_d\cdot X)$ will be treated as 0 (zero) when the calculated value is negative.

Figure H-13

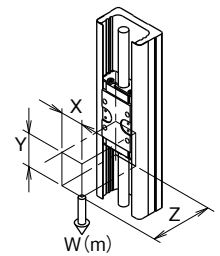

In case of load coming from different direction other than the direction shown in the drawing W(m), please contact NB.

P_{TC}: calculated load applied to a block during uniform motion(N) P_{Ta}: calculated load applied to a block during accelerating(N)
P_{Td}: calculated load applied to a block during decelerating(N) n: number of blocks of BG W: applied load(N) m: carrying mass(kg)
α_a: acceleration during accelerating(m/sec^2) α_d: acceleration during decelerating(m/sec^2) (the negative value)
X: distance between the center of BG and the center of the carrying mass(mm)
Y: distance between the center of BG and the center of the carrying mass(mm)
Z: distance between the center of BG ball screw and the center of the carrying mass(mm)
Ep: moment equivalent coefficient in the pitching direction (refer to Table H-10)
Ey: moment equivalent coefficient in the yawing direction (refer to Table H-10)
Er: moment equivalent coefficient in the rolling direction (refer to Table H-10)
M_{pL}: applied moment in the pitching direction (N・mm) $M_{pL}=W\cdot Z$ MyL: loaded moment in the yawing direction (N・mm) $M_{yL}=W\cdot X$
M_{rL}: applied moment in the rolling direction (N・mm) $M_{rL}=0$ ※Refer to Fig. H-4 for the direction of moment.

A.1.d.

Obtain the calculated load applied to a block (P_T) by calculating the average load of each motion using an appropriate equation among those shown above according to the application.

$$P_T=\sqrt[3]{\frac{1}{(S1+S2+S3)}(P_{Ta}^3\cdot S1+P_{TC}^3\cdot S2+P_{Td}^3\cdot S3)} \quad \cdots\cdots (11)$$

P_T: calculated load applied to one block (N)
S1: travel distance during acceleration (mm) (refer to Figure H-14)
S2: travel distance during uniform motion (mm) (refer to Figure H-14)
S3: travel distance during deceleration (mm) (refer to Figure H-14)
P_{Ta}: calculated load applied to one block during accelerating (N): equation (3), (6), and (9)
P_{TC}: calculated load applied to one block during uniform motion (N): equation (2), (5), and (8)
P_{Td}: calculated load applied to one block during decelerating (N): equation (4), (7), and (10)

Figure H-14

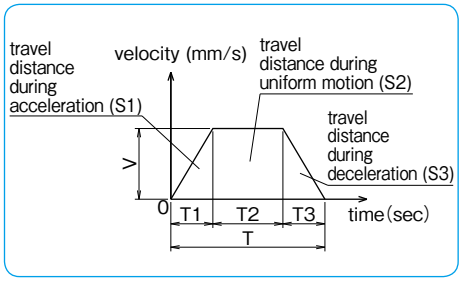

B. Life of Ball Screw and Support Bearing

The life of ball screw and support bearing can be calculated using a common equation, as shown below. Compare the dynamic load rating of the ball screw and the support bearing and apply smaller value for calculation.

$$L_a=\left(\frac{1}{f_w}\cdot\frac{C_a \text{ or } C_b}{P_a}\right)^3\cdot\ell \quad \cdots\cdots (12)$$

L_a: rated life (km) f_w: applied load coefficient (refer to Table H-9)
C_a: basic dynamic load rating of the ball screw (N)
C_b: basic dynamic load rating of the support bearing (N)
P_a: axial load (N) ℓ: ball screw lead (mm)

B.1. Calculation of Pa

Before calculating the life using the equation (12), calculate Pa with acceleration taken into consideration. Calculate the load in each axial direction during uniform motion, acceleration, and deceleration and the obtained value is used as Pa.

B.1.a. For Horizontal Move

i) during uniform motion (P_{ac})

$$P_{ac}=\mu\cdot W+F+f_b\cdot n \quad \cdots\cdots (13)$$

ii) during acceleration (P_{aa})

$$P_{aa}=\mu\cdot W+F+f_b\cdot n+(m+m_b\cdot n)\alpha_a \quad \cdots\cdots (14)$$

iii) during deceleration (P_{ad})

$$P_{ad}=\mu\cdot W+F+f_b\cdot n+(m+m_b\cdot n)\alpha_d \quad \cdots\cdots (15)$$

Table H-11 Sliding Resistance (fb) of a Single Block (Seal Resistance)

unit: N

	high grade (H)	precision grade (P)
BG20	2.3	4.9
BG26	5.4	9.8
BG33	4.4	10.2
BG46	7.4	13.3
BG55	9	16

B.1.b. For Vertical Move

i) during uniform motion (P_{ac})

$$P_{ac}=(m+m_b\cdot n)g+F+f_b\cdot n \quad \cdots\cdots (16)$$

ii) during acceleration (P_{aa})

$$P_{aa}=(m+m_b\cdot n)\cdot(g+\alpha_a)+F+f_b\cdot n_a \quad \cdots\cdots (17)$$

iii) during deceleration (P_{ad})

$$P_{ad}=(m+m_b\cdot n)\cdot(g+\alpha_d)+F+f_b\cdot n_d \quad \cdots\cdots (18)$$

P_{ac}: axial load rating during uniform motion (N)
P_{aa}: axial load rating during accelerating (N)
P_{ad}: axial load rating during decelerating (N)
μ: friction coefficient W: load applied to a block (N)
F: external force (load) applied to the axial direction (N)
f_b: sliding resistance of a single block (N) (refer to Table H-11)
n: number of blocks of BG m: carrying mass (kg)
m_b: mass of a block of BG (kg) (refer to Table H-4)
α_a: acceleration during accelerating (m/s^2)
α_d: acceleration during decelerating (m/s^2)
g: acceleration of gravity

B.1.c.

Obtain the average axial load (Pa) using an appropriate formula among those shown above depending on the application.

$$P_a=\sqrt[3]{\frac{1}{(S1+S2+S3)}(|P_{aa}|^3\cdot S1+|P_{ac}|^3\cdot S2+|P_{ad}|^3\cdot S3)} \quad \cdots (19)$$

P_a: average axial load (N)
S1: travel distance during acceleration (mm) (refer to Table H-14)
S2: travel distance during uniform motion (mm) (refer to Table H-14)
S3: travel distance during deceleration (mm) (refer to Table H-14)
P_{aa}: axial load during accelerating (N): formulas (14) and (17)
P_{ac}: axial load during uniform motion (N): formulas (13) and (16)
P_{ad}: axial load during decelerating (N): formulas (15) and (18)

www.bergab.ru Берг АБ bergab@ya.ru Тел. (495)-228-06-21, факс (495) 223-3071

www.bergab.ru Берг АБ bergab@ya.ru Тел. (495)-228-06-21, факс (495) 223-3071

LUBRICATION

- BG type contains a lithium soap based grease. (Multemp PS No.2, KYODO YUSHI) Apply similar type of grease for the lubrication as required depending on the operating conditions.
- Use the grease fitting to lubricate the slide block. For ball screw portion apply grease directly to the surface of screw shaft.
- Unless otherwise instructed, a grease fitting is located as shown in Figure H-15.
- The grease can be changed to a high function type by adding a special grease option at the end of the part number. Please refer to Table H-12 for the grease type. Also refer to page Eng-39 for further details.

Table H-12 Applicable Grease

grease option	features	product name
none (standard)	—	Multemp PS No.2 (KYODO YUSHI)
GK	urea-type low dust generation grease	K Grease
GU	urea-type low dust generation grease; low sliding resistance	KGU Grease
GL	lithium-type low dust generation grease	KGL Grease
GF	urea-type anti-fretting grease	KGF Grease

Figure H-15 Location of Grease Fitting

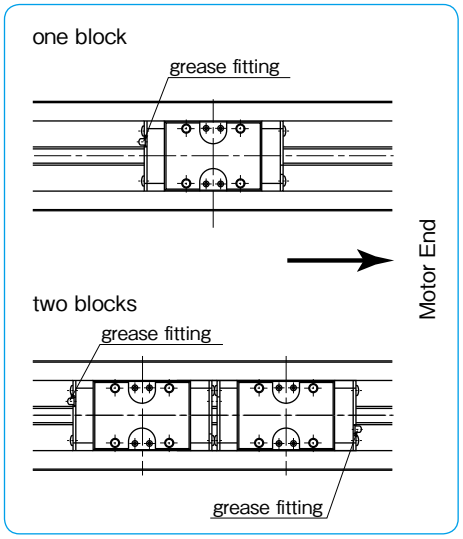

OPERATING TEMPERATURE

- Resin parts are incorporated in the BG type. Please avoid using BG type above 80℃. Please use the product at 55℃ or lower when sensor/bellows are optioned.

USE AND HANDLING PRECAUTIONS

- Please handle as a precision component and avoid excessive vibration or shock.
- Rough handling will affect the smooth motion and reduce the precision performance and life time.
- DO NOT DISASSEMBLE. The accuracy of BG type is preadjusted when assembled.
- Please allow for extra stroke length. If the guide block repeatedly collides with damper, it may cause damage.
- Depending upon the operating environment, dust and debris may contaminate BG type and disrupt the ball circulation and precision performance.

MOTOR BRACKET CONFIGURATIONS & APPLICABLE MOTORS

NB provides optional motor brackets to easily install most popular motors.

Table H-13 Applicable Motors

Applicable motors		Part number		BG20	BG26	BG33	BG46	BG55
AC Servo motor	Panasonic	MUMA5A	50W	AA	AA	B2	—	—
		MUMA01	100W					
		MUMA02	200W	—	—	A7	A2	
		MUMA04	400W			—		
		MSMA3A	30W	A3	A3	A2	C0	—
		MSMD(MSMA)5A	50W					
		MSMD(MSMA)01	100W					
		MSMD(MSMA)02	200W	—	—	A7	A2	—
		MSMD(MSMA)04	400W			—		
		MSMD(MSMA)08	750W	—	—	—	A3	A2
	MITSUBISHI ELECTRIC	HC-AQ0135	10W	A8	A8	—	—	—
		HC-AQ0235	20W					
		HC-AQ0335	30W					
		HF-KP(MP)053	50W	A1	A1	A1	B0	—
		HF-KP(MP)13	100W					
		HF-KP(MP)23	200W	—	—	A6	A1	A0
		HF-KP(MP)43	400W			—		
		HF-KP(MP)73	750W	—	—	—	A4	A1
		HA-FF053	50W	—	—	A3	A0	—
		HA-FF13	100W					
		HA-FF23	200W	—	—	—	A3	A2
		HA-FF33	300W					
	YASKAWA ELECTRIC	SGMM-A131＊	10W	A9	A9	—	—	—
		SGMM-A231＊	20W					
		SGMM-A331＊	30W					
		SGMAH-A3	30W	A1	A1	A1	B0	—
		SGMJV, SGMAV(SGMAS)-A5	50W					
		SGMJV, SGMAV(SGMAS)-01	100W					
		SGMAV(SGMAS)-C2	150W					
		SGMJV, SGMAV(SGMAS)-02	200W	—	—	A6	A1	A0
		SGMJV, SGMAV(SGMAS)-04	400W			—		
		SGMJV, SGMAV(SGMAS)-08	750W	—	—	—	A4	A1
	SANYO DENKI	Q1AA04003D	30W	A1	A1	A1	B0	—
		Q1AA04005D	50W					
		Q1AA04010D	100W					
		Q1AA06020D	200W	—	—	A6	A1	A0
		Q1AA06040D	400W			—		
		Q1AA07075D	750W	—	—	—	A4	A1
		Q2AA05005D	50W	—	—	A3	A0	—
		Q2AA05010D	100W					
		Q2AA07020D	200W	—	—	—	A3	A2
		Q2AA07030D	300W					
		Q2AA07040D	400W					
		Q2AA08050D	500W	—	—	—	—	A3
		Q2AA08075D	750W					
Stepper motor	ORIENTAL MOTOR	UPD534M-A	—	A5	A5	B1	—	—
		PMU33AH	—	A6	A6	—	—	—
		UPK(RK)54, AS4	—	A5	A5	B1	—	—
		UPK(RK)56, AS6	—	—	—	A4	D0	—
		UPK(RK)59, AS9	—	—	—	—	—	A4
		PK26	—	—	—	A5	—	—
	SANYO DENKI	F SERIES□42mm	—	A5	A5	B1	—	—
		F SERIES□60mm	—	—	—	A4	D0	—
		F SERIES□85mm	—	—	—	—	—	A4
	TECHNO DRIVE	＊K-S54＊	—	A5	A5	B1	—	—
		＊K-S(M)56＊	—	—	—	A4	D0	—
		＊K-M(G)59＊	—	—	—	—	—	A4

NB can provide other types of motor brackets. Please contact NB for details.

www.bergab.ru Берг АБ bergab@ya.ru Тел. (495)-228-06-21, факс (495) 223-3071

www.bergab.ru Берг АБ bergab@ya.ru Тел. (495)-228-06-21, факс (495) 223-3071

BG20

Figures inside( ) indicates mass of the motor mount adapter plate.

Motor Bracket A0

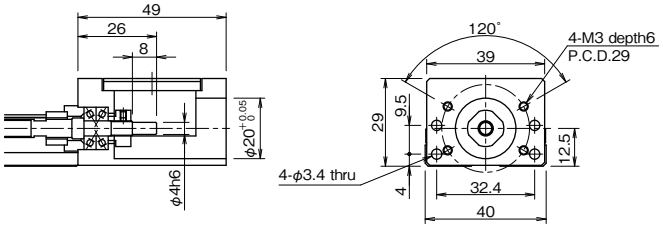

Motor Bracket A1 (Mass: 38g)

Recommended Coupling: SFC-010DA2(Miki Pulley Co., Ltd.)
XBW-19C2(Nabeya Bi-tech Kaisha)

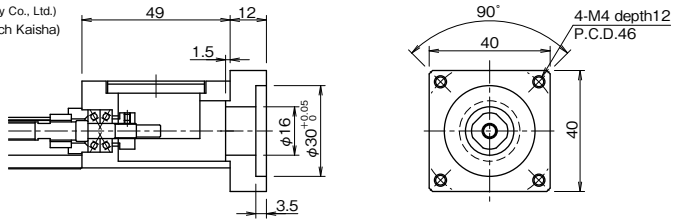

Motor Bracket A3 (Mass: 39g)

Recommended Coupling: SFC-010DA2(Miki Pulley Co., Ltd.)
XBW-19C2(Nabeya Bi-tech Kaisha)

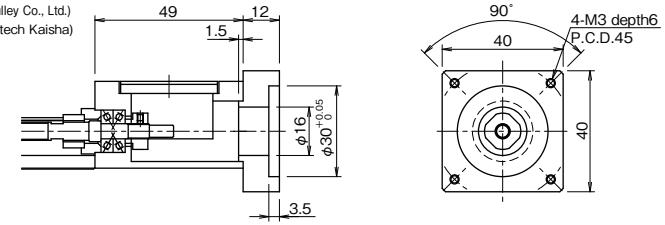

Motor Bracket A5 (Mass: 26g)

Recommended Coupling: SFC-010DA2(Miki Pulley Co., Ltd.)
XBW-19C2(Nabeya Bi-tech Kaisha)

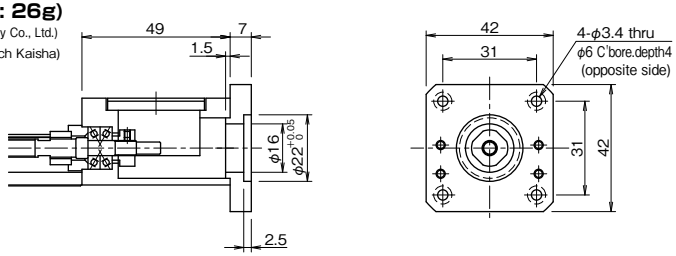

Motor Bracket A6 (Mass: 10g)

Recommended Coupling: SFC-010DA2(Miki Pulley Co., Ltd.)
XBW-19C2(Nabeya Bi-tech Kaisha)

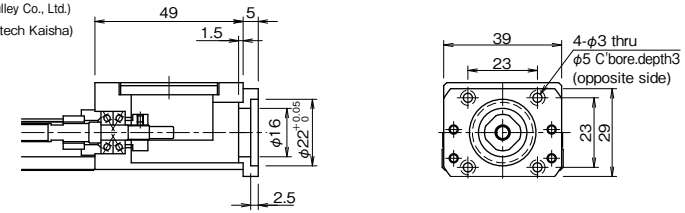

Motor Bracket A8 (Mass: 12g)

Recommended Coupling: SFC-010DA2(Miki Pulley Co., Ltd.)
XBW-19C2(Nabeya Bi-tech Kaisha)

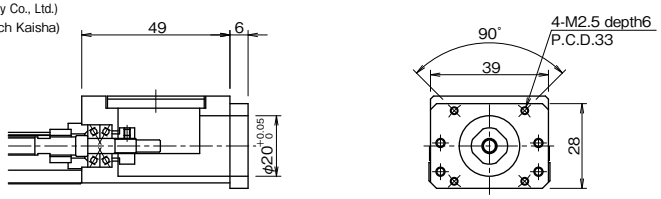

Motor Bracket A9 (Mass: 14g)

Recommended Coupling: SFC-010DA2(Miki Pulley Co., Ltd.)
XBW-19C2(Nabeya Bi-tech Kaisha)

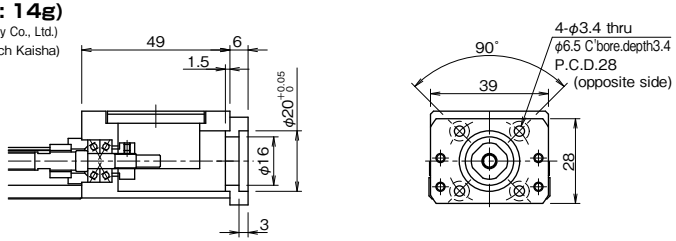

Motor Bracket AA(Mass: 46g)

Recommended Coupling: SFC-010DA2(Miki Pulley Co., Ltd.)
XBW-19C2(Nabeya Bi-tech Kaisha)

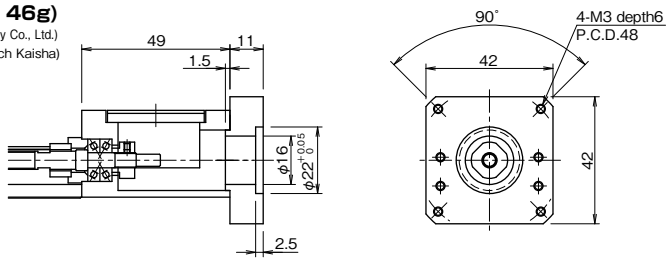

For configurations A5, A6, A9 and AA, attach the motor to the motor mount adapter plate first.

www.bergab.ru Берг АБ bergab@ya.ru Тел. (495)-228-06-21, факс (495) 223-3071

www.bergab.ru Берг АБ bergab@ya.ru Тел. (495)-228-06-21, факс (495) 223-3071

BG26

Figures inside( ) indicates mass of the motor mount adapter plate.

Motor Bracket A0

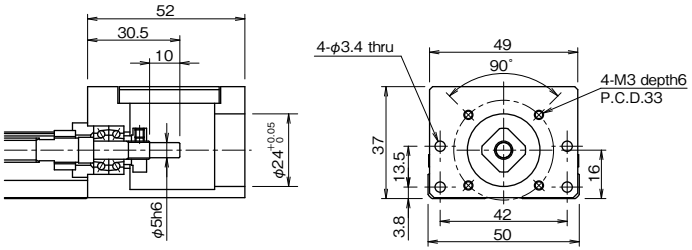

Motor Bracket A1 (Mass: 28g)

Recommended Coupling: SFC-010DA2(Miki Pulley Co., Ltd.)
LAD-20C(Sakai Manufacturing Co., Ltd.)
XBW-19C2(Nabeya Bi-tech Kaisha)

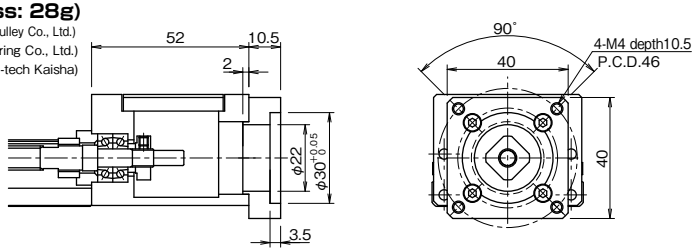

Motor Bracket A3 (Mass: 24g)

Recommended Coupling: SFC-010DA2(Miki Pulley Co., Ltd.)
LAD-20C(Sakai Manufacturing Co., Ltd.)
XBW-19C2(Nabeya Bi-tech Kaisha)

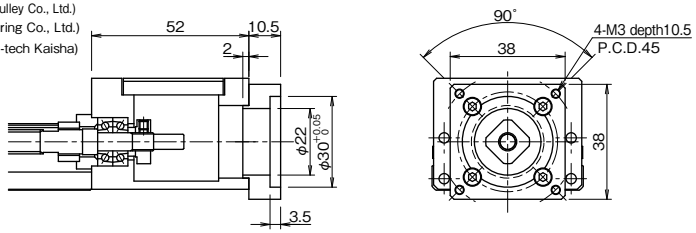

Motor Bracket A5 (Mass: 32g)

Recommended Coupling: SFC-010DA2(Miki Pulley Co., Ltd.)
LAD-20C(Sakai Manufacturing Co., Ltd.)
XBW-19C2(Nabeya Bi-tech Kaisha)

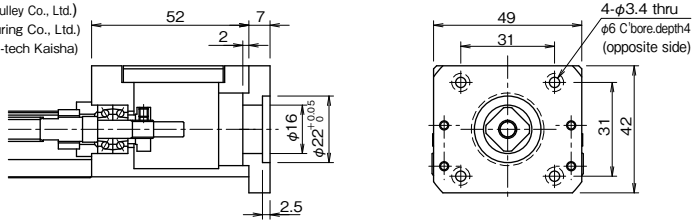

Motor Bracket A6 (Mass: 16g)

Recommended Coupling: SFC-010DA2(Miki Pulley Co., Ltd.)
LAD-20C(Sakai Manufacturing Co., Ltd.)
XBW-19C2(Nabeya Bi-tech Kaisha)

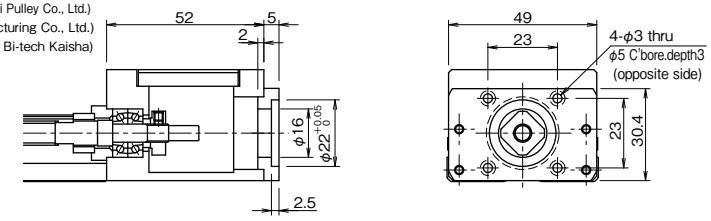

Motor Bracket A8 (Mass: 21g)

Recommended Coupling: SFC-010DA2(Miki Pulley Co., Ltd.)
LAD-20C(Sakai Manufacturing Co., Ltd.)
XBW-19C2(Nabeya Bi-tech Kaisha)

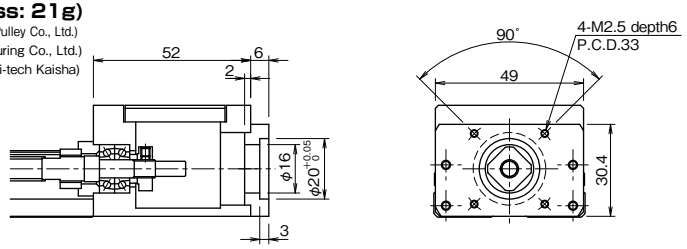

Motor Bracket A9 (Mass: 21g)

Recommended Coupling: SFC-010DA2(Miki Pulley Co., Ltd.)
LAD-20C(Sakai Manufacturing Co., Ltd.)
XBW-19C2(Nabeya Bi-tech Kaisha)

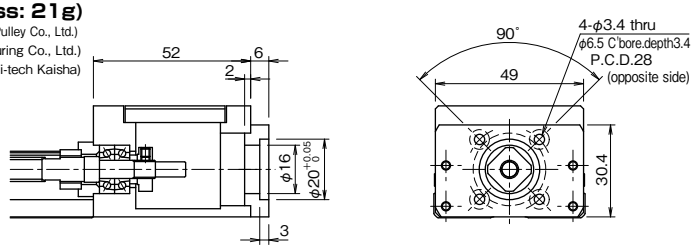

Motor Bracket AA (Mass: 41g)

Recommended Coupling: SFC-010DA2(Miki Pulley Co., Ltd.)
LAD-20C(Sakai Manufacturing Co., Ltd.)
XBW-19C2(Nabeya Bi-tech Kaisha)

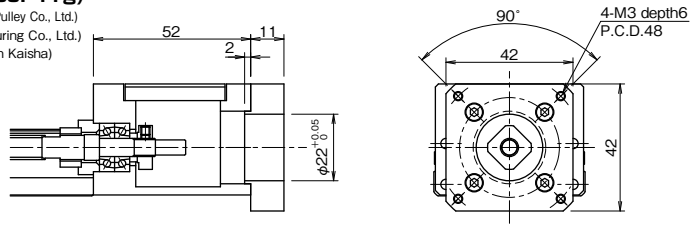

For configurations A5, A6 and A9, attach the motor to the motor mount adapter plate first.

www.bergab.ru Берг АБ bergab@ya.ru Тел. (495)-228-06-21, факс (495) 223-3071

www.bergab.ru Берг АБ bergab@ya.ru Тел. (495)-228-06-21, факс (495) 223-3071

BG33

Figures inside( ) indicates mass of the motor mount adapter plate.

Motor Bracket A0

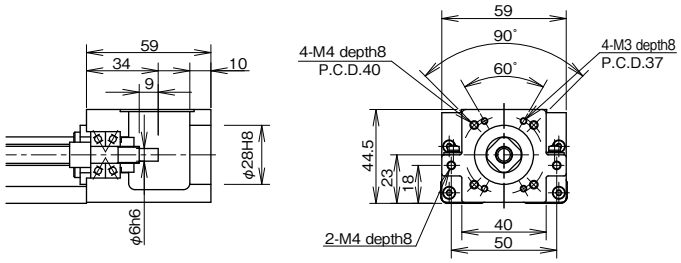

Motor Bracket A1 (Mass: 66g)

Recommended Coupling: SFC-020DA2(Miki Pulley Co., Ltd.)
LAD-25C(Sakai Manufacturing Co., Ltd.)
XBW-25C2(Nabeya Bi-tech Kaisha)

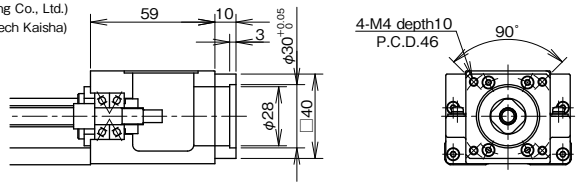

Motor Bracket A2 (Mass: 67g)

Recommended Coupling: SFC-020DA2(Miki Pulley Co., Ltd.)
LAD-25C(Sakai Manufacturing Co., Ltd.)
XBW-25C2(Nabeya Bi-tech Kaisha)

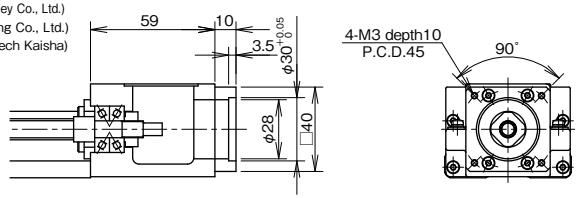

Motor Bracket A3 (Mass: 133g)

Recommended Coupling: SFC-020DA2(Miki Pulley Co., Ltd.)
LAD-25C(Sakai Manufacturing Co., Ltd.)
XBW-25C2(Nabeya Bi-tech Kaisha)

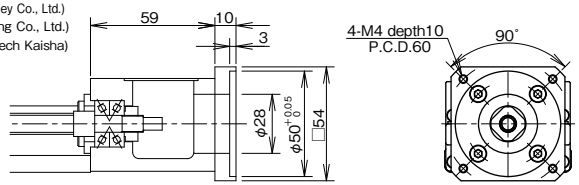

Motor Bracket A4 (Mass: 212g)

Recommended Coupling: SFC-020DA2(Miki Pulley Co., Ltd.)*
LAD-25C(Sakai Manufacturing Co., Ltd.)*
XBW-25C2(Nabeya Bi-tech Kaisha)*
*Please contact NB when you use αSTEP motor (Oriental Motor Co., Ltd.).

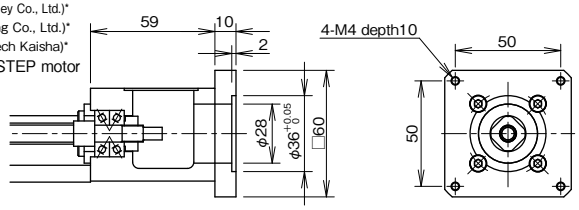

Motor Bracket A5 (Mass: 125g)

Recommended Coupling: SFC-020DA2(Miki Pulley Co., Ltd.)
LAD-25C(Sakai Manufacturing Co., Ltd.)
XBW-25C2(Nabeya Bi-tech Kaisha)

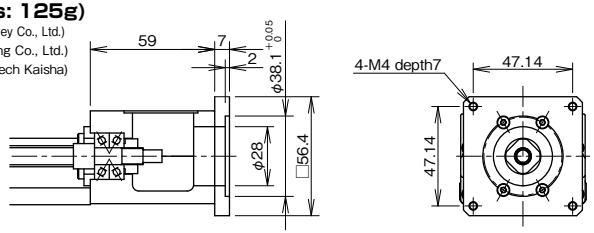

Motor Bracket A6 (Mass: 215g)

Recommended Coupling: XBW-27C2(Nabeya Bi-tech Kaisha)

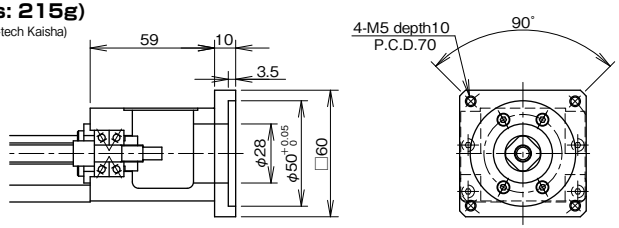

Motor Bracket A7 (Mass: 215g)

Recommended Coupling: XBW-27C2(Nabeya Bi-tech Kaisha)

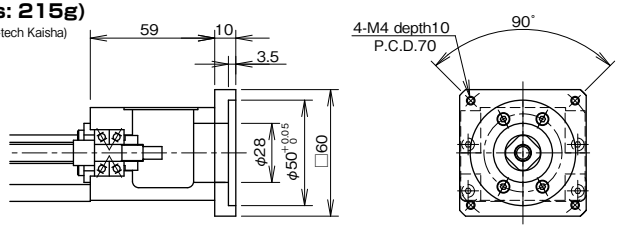

Motor Bracket B1 (Mass: 111g)

Recommended Coupling: SFC-010DA2(Miki Pulley Co., Ltd.)
LAD-20C(Sakai Manufacturing Co., Ltd.)
XBW-19C2(Nabeya Bi-tech Kaisha)

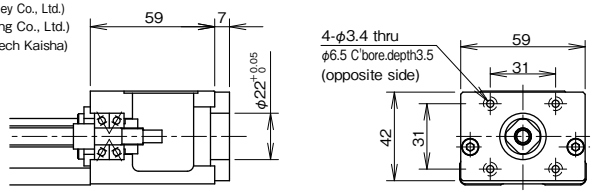

Motor Bracket B2 (Mass: 167g)

Recommended Coupling: LAD-25C(Sakai Manufacturing Co., Ltd.)
XBW-19C2(Nabeya Bi-tech Kaisha)

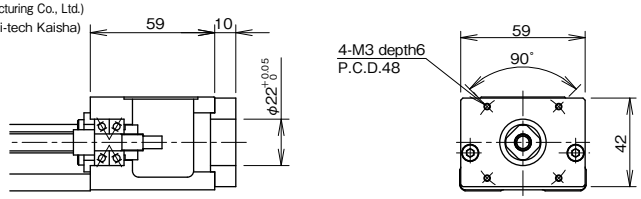

For configurations B1 and B2, attach the motor to the motor mount adapter plate first.

www.bergab.ru Берг АБ bergab@ya.ru Тел. (495)-228-06-21, факс (495) 223-3071

www.bergab.ru Берг АБ bergab@ya.ru Тел. (495)-228-06-21, факс (495) 223-3071

BG46

Figures inside( ) indicates mass of the motor mount adapter plate.

Motor Bracket A0

Recommended Coupling: SFC-020DA2(Miki Pulley Co., Ltd.)
LAD-25C(Sakai Manufacturing Co., Ltd.)
XBW-25C2(Nabeya Bi-tech Kaisha)

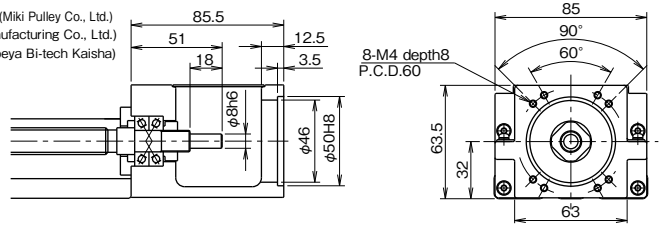

Motor Bracket A1 (Mass: 103g)

Recommended Coupling: SFC-030DA2(Miki Pulley Co., Ltd.)
LAD-30C(Sakai Manufacturing Co., Ltd.)
XBW-34C3(Nabeya Bi-tech Kaisha)

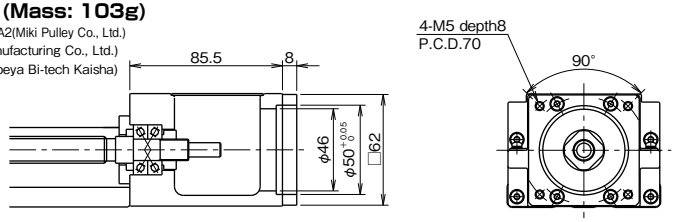

Motor Bracket A2 (Mass: 106g)

Recommended Coupling: SFC-030DA2(Miki Pulley Co., Ltd.)
LAD-30C(Sakai Manufacturing Co., Ltd.)
XBW-34C3(Nabeya Bi-tech Kaisha)

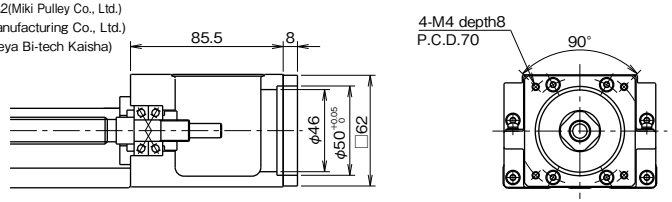

Motor Bracket A3 (Mass: 448g)

Recommended Coupling
(200W-400W): SFC-030DA2(Miki Pulley Co., Ltd.)
XBW-34C3(Nabeya Bi-tech Kaisha)
(750W): SFC-040DA2(Miki Pulley Co., Ltd.)
XBW-39C2(Nabeya Bi-tech Kaisha)

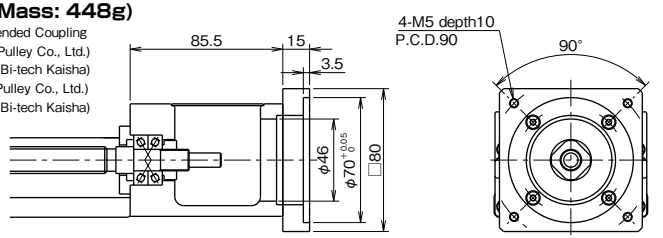

Motor Bracket A4 (Mass: 628g)

Recommended Coupling: SFC-040DA2(Miki Pulley Co., Ltd.)
XBW-39C2(Nabeya Bi-tech Kaisha)

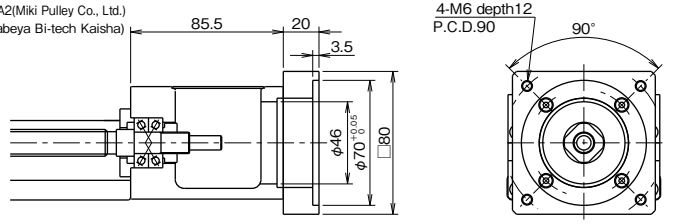

Motor Bracket B0

Recommended Coupling: SFC-020DA2(Miki Pulley Co., Ltd.)
LAD-25C(Sakai Manufacturing Co., Ltd.)
XBW-25C2(Nabeya Bi-tech Kaisha)

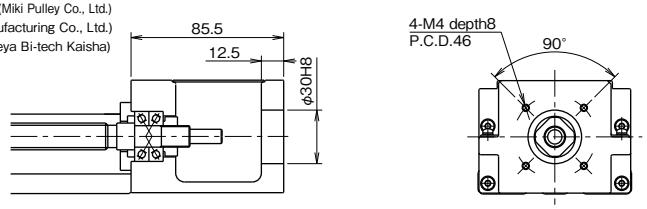

Motor Bracket C0

Recommended Coupling: SFC-020DA2(Miki Pulley Co., Ltd.)
LAD-25C(Sakai Manufacturing Co., Ltd.)
XBW-25C2(Nabeya Bi-tech Kaisha)

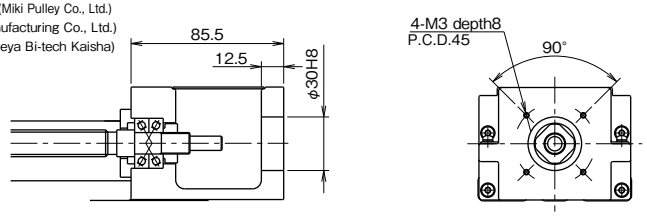

Motor Bracket D0

Recommended Coupling: SFC-020DA2(Miki Pulley Co., Ltd.)*
LAD-25C(Sakai Manufacturing Co., Ltd.)*
XBW-27C2(Nabeya Bi-tech Kaisha)
*Please contact NB when you use αSTEP motor (Oriental Motor Co., Ltd.).

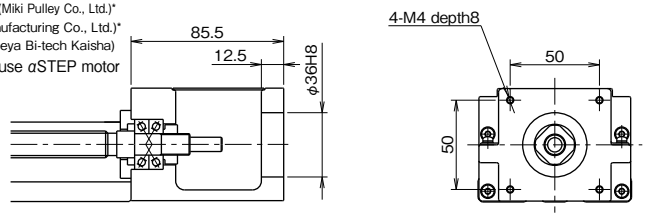

www.bergab.ru Берг АБ bergab@ya.ru Тел. (495)-228-06-21, факс (495) 223-3071

www.bergab.ru Берг АБ bergab@ya.ru Тел. (495)-228-06-21, факс (495) 223-3071

BG55

Figures inside( ) indicates mass of the motor mount adapter plate.

Motor Bracket A0

Recommended Coupling: SFC-035DA2(Miki Pulley Co., Ltd.)
LAD-35C(Sakai Manufacturing Co., Ltd.)
XBW-34C3(Nabeya Bi-tech Kaisha)

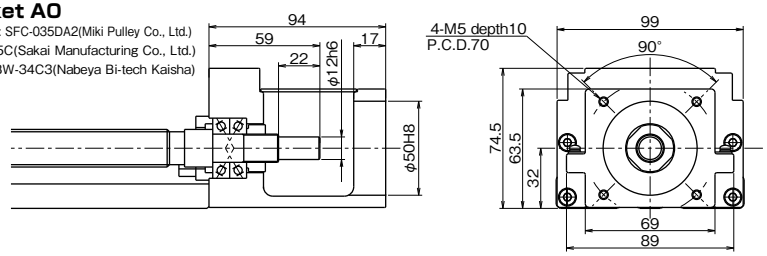

Motor Bracket A1 (Mass: 329g)

Recommended Coupling: SFC-040DA2(Miki Pulley Co., Ltd.)
LAD-40C(Sakai Manufacturing Co., Ltd.)
XBW-39C2(Nabeya Bi-tech Kaisha)

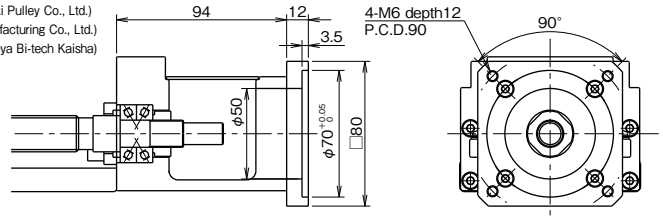

Motor Bracket A2 (Mass: 333g)

Recommended Coupling: SFC-040DA2(Miki Pulley Co., Ltd.)
LAD-40C(Sakai Manufacturing Co., Ltd.)
XBW-39C2(Nabeya Bi-tech Kaisha)

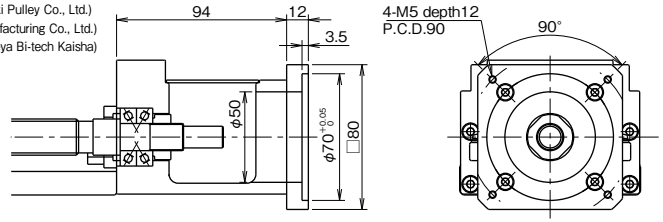

Motor Bracket A3 (Mass: 399g)

Recommended Coupling: SFC-040DA2(Miki Pulley Co., Ltd.)
LAD-40C(Sakai Manufacturing Co., Ltd.)
XBW-39C2(Nabeya Bi-tech Kaisha)

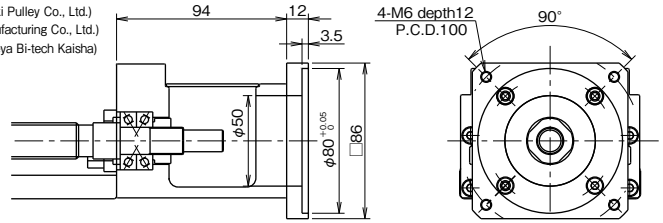

Motor Bracket A4 (Mass: 449g)

Recommended Coupling: SFC-035DA2(Miki Pulley Co., Ltd.)*
LAD-35C(Sakai Manufacturing Co., Ltd.)*
XBW-34C3(Nabeya Bi-tech Kaisha)*
*Please contact NB when you use αSTEP motor (Oriental Motor Co., Ltd.).

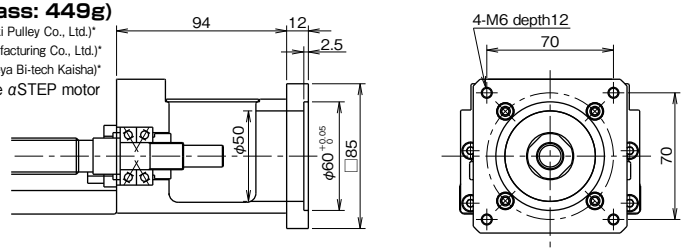

EXPOSED BRACKET RO

The ball screw shaft end is exposed with the exposed bracket R0 type.
Please fabricate an original bracket in case the standard brackets are not applicable.

BG20 Exposed Bracket RO

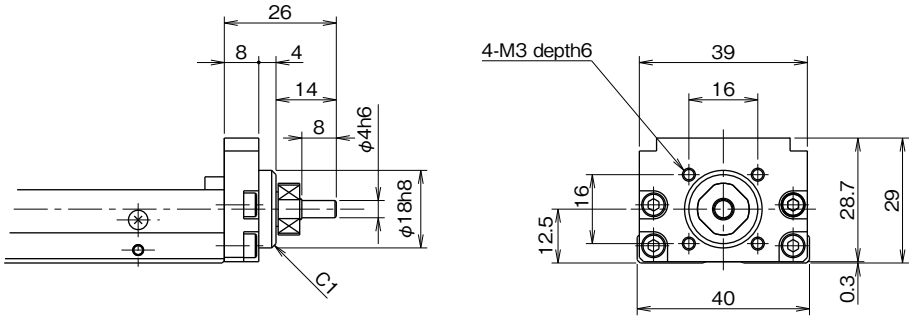

1. Applicable with cover and with sensors.
2. Mass is 0.04kg less than the mass in Table H-3 on page H-7.

BG26 Exposed Bracket RO

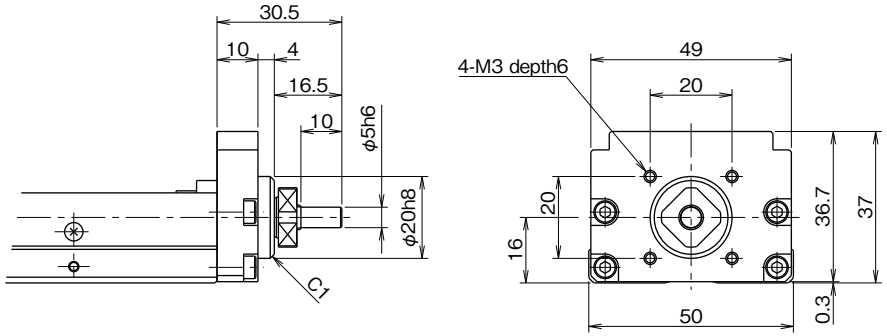

1. Applicable with cover and with sensors.
2. Mass is 0.08kg less than the mass in Table H-3 on page H-7.

www.bergab.ru Берг АБ bergab@ya.ru Тел. (495)-228-06-21, факс (495) 223-3071

www.bergab.ru Берг АБ bergab@ya.ru Тел. (495)-228-06-21, факс (495) 223-3071

BG33 Exposed Bracket RO

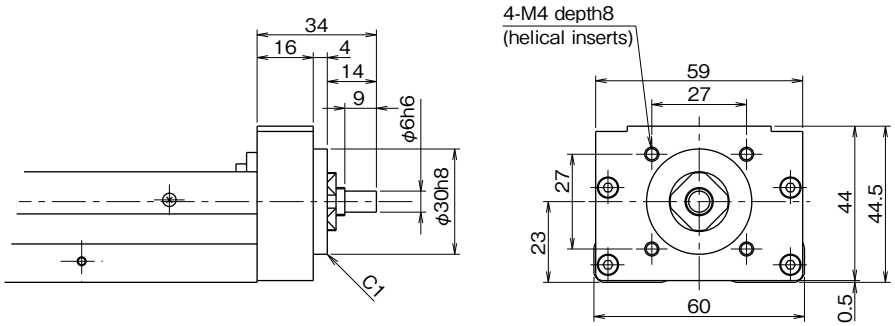

1. Applicable with cover and with sensors.
2. Mass is 0.1kg less than the mass in Table H-3 on page H-7.

BG55 Exposed Bracket RO

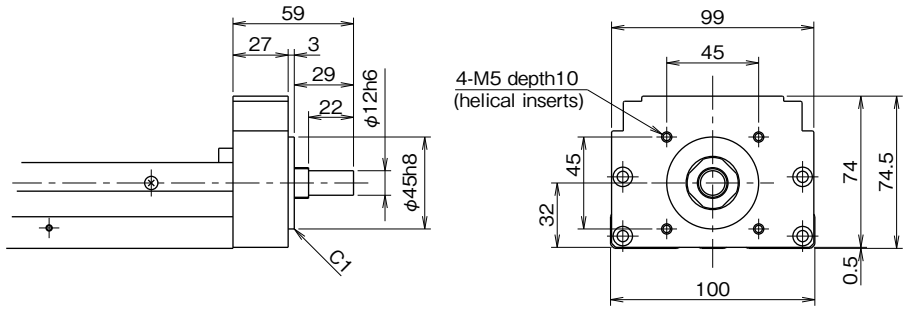

1. Applicable with cover and with sensors.
2. Mass is 0.3kg less than the mass in Table H-3 on page H-7.

BG46 Exposed Bracket RO

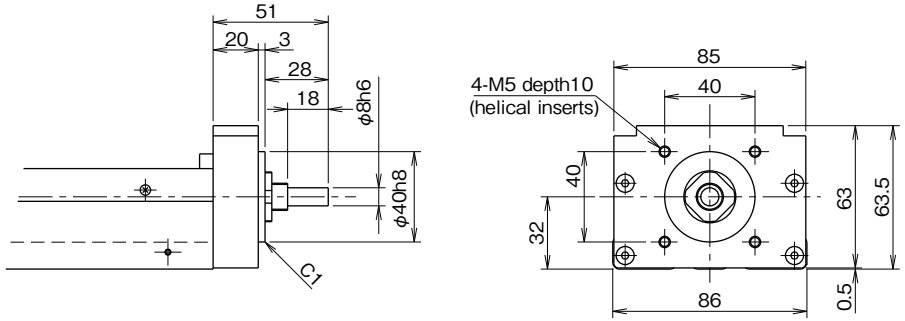

1. Applicable with cover and with sensors.
2. Mass is 0.3kg less than the mass in Table H-3 on page H-7.

www.bergab.ru Берг АБ bergab@ya.ru Тел. (495)-228-06-21, факс (495) 223-3071

www.bergab.ru Берг АБ bergab@ya.ru Тел. (495)-228-06-21, факс (495) 223-3071

RETURN PULLEY UNIT

Return pulley units in which a motor is connected with a timing belt are available for BG type. Its return structure allows the reduction of total length (available for BG33 and BG46).

BG33 Return Pulley Unit

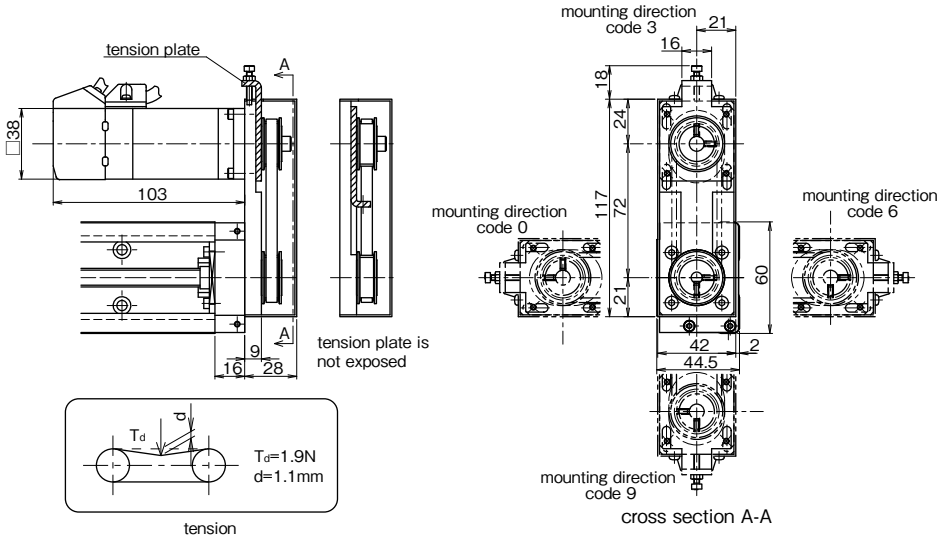

1.This drawing shows RA for MSMA01(Panasonic).
2.Installation position of Pulley Unit can be selected at 90° intervals (mounting direction code).
3.Applicable with cover and with sensors.
4.Tension plate can be built in and is not exposed. (not applicable to RC)
5.Mass is added 0.2kg to the mass in Table H-3, page H-7.
6.Inertia is added 2.22×10^{-6}kg・m^2 to the value of Table H-5, page H-8. (motor inertia not included)
7.Part number structure BG33＊＊＊—＊＊＊＊/ ☆☆□
☆☆: Symbol of applicable motor bracket (refer to Table H-14)
□: Mounting direction code (refer to cross section A-A)

Table H-14 Applicable Motor

motor bracket	applicable motors	
RA	Panasonic	MINAS SERIES : 50~100W
RB	YASKAWA ELECTRIC	SIGMA SERIES : 50~100W
	MITSUBISHI ELECTRIC	HC-MF SERIES : 50~100W
	SANYO DENKI	Q1 SERIES : 50~100W
RC	5 PHASE STEPPING MOTOR	□42 SERIES

Please contact NB for other stepper motors.

BG46 Return Pulley Unit

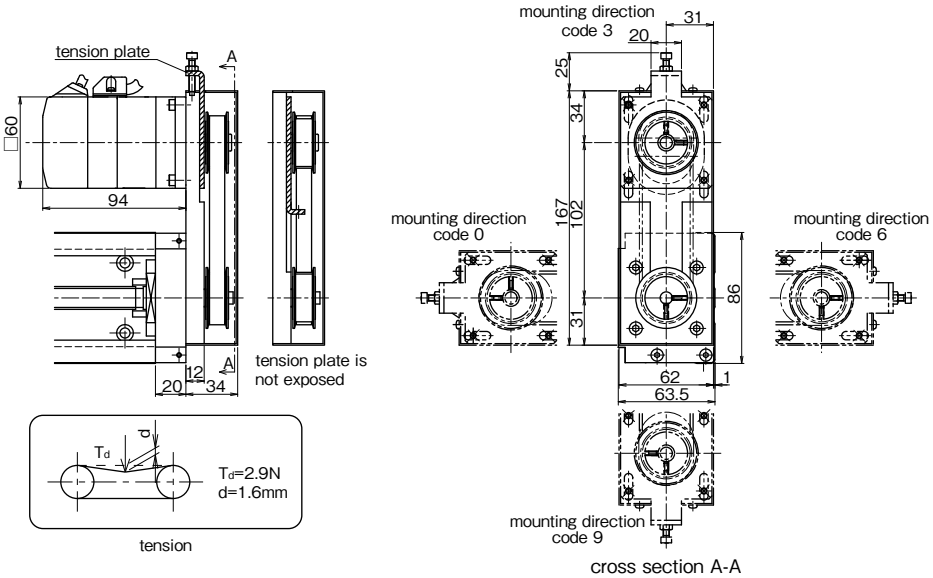

1.This drawing shows RA for MSMA01(Panasonic).
2.Installation position of Pulley Unit can be selected at 90° intervals (mounting direction code).
3.Applicable with cover and with sensors.
4.Tension plate can be built in and is not exposed.
5.Mass is added 0.7kg to the value in Table H-3, page H-7.
6.Inertia is added 1.24×10^{-5}kg・m^2 to the value of Table H-5, page H-8. (motor inertia not included)
7.Parts number structure BG46＊＊＊—＊＊＊＊/☆☆□
☆☆: Symbol of applicable motor bracket (refer to Table H-15)
□: Mounting direction code (refer to cross section A-A)

Table H-15 Applicable Motor

motor bracket	applicable motors	
RA	Panasonic	MINAS SERIES : 200W
RB	YASKAWA ELECTRIC	SIGMA SERIES : 200W
	MITSUBISHI ELECTRIC	HC-MF SERIES : 200W
	SANYO DENKI	Q1 SERIES : 200W
RC	5 PHASE STEPPING MOTOR	□60 SERIES

Please contact NB for other stepper motors.

www.bergab.ru Берг АБ bergab@ya.ru Тел. (495)-228-06-21, факс (495) 223-3071

www.bergab.ru Берг АБ bergab@ya.ru Тел. (495)-228-06-21, факс (495) 223-3071

SENSOR

Photomicro sensor or proximity sensor can be attached to the BG actuator with our optional sensor-mounting rail (the same length as the guide rail length). Tapped holes are machined on both sides of the guide rail, allowing attachment of sensor to either side. Standard positioning (without special instruction from customer) would be to the left of the motor mount end. Sensor option includes the items that are listed below.

BG20

S Specification (Compact Photomicro Sensor)

—Without Cover—

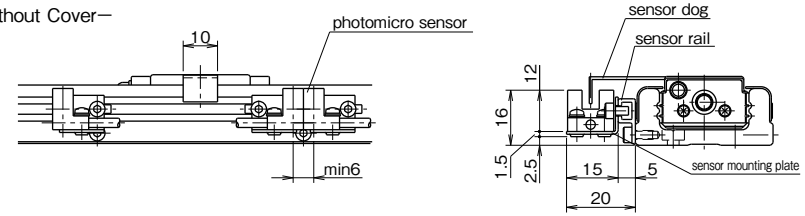

—With Cover—

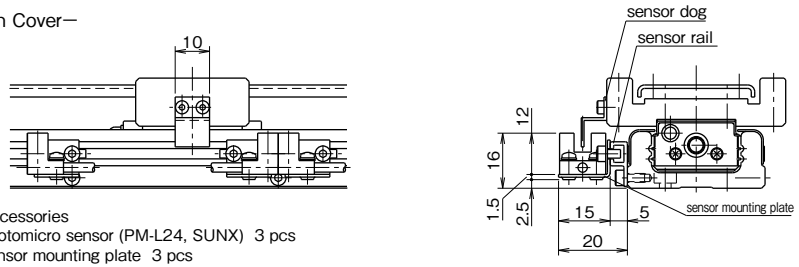

Accessories
photomicro sensor (PM-L24, SUNX) 3 pcs
sensor mounting plate 3 pcs
sensor rail 1 pc
sensor dog 1 pc

K Specification (Proximity Sensor)

—Without Cover—

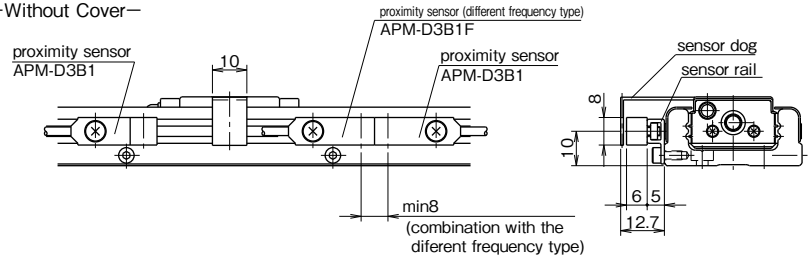

—With Cover—

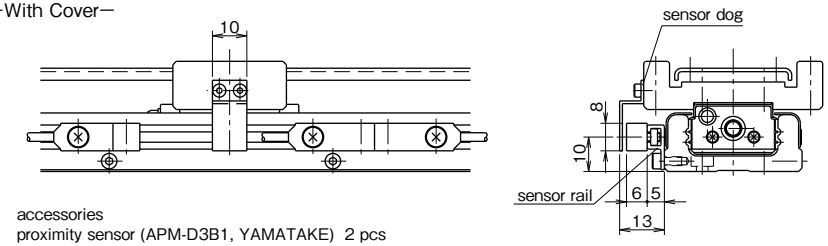

accessories
proximity sensor (APM-D3B1, YAMATAKE) 2 pcs
proximity sensor (different frequency type)(APM-D3B1F, YAMATAKE) 1 pc
sensor rail 1 pc
sensor dog 1 pc

BG26

S Specification (Compact Photomicro Sensor)

—Without Cover—

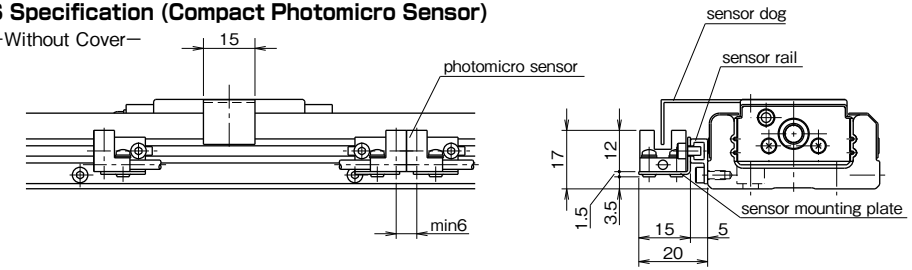

—With Cover—

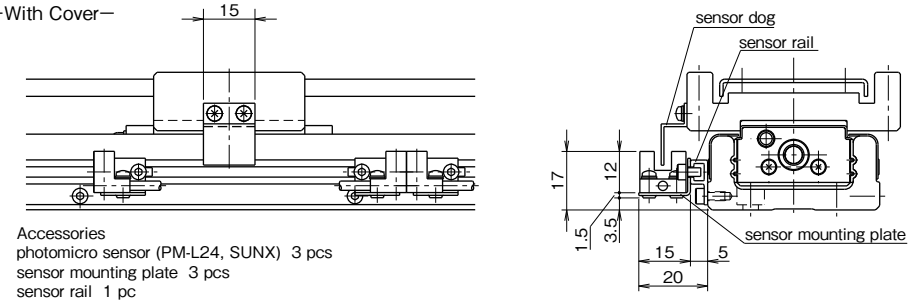

Accessories
photomicro sensor (PM-L24, SUNX) 3 pcs
sensor mounting plate 3 pcs
sensor rail 1 pc
sensor dog 1 pc

K Specification (Proximity Sensor)

—Without Cover—

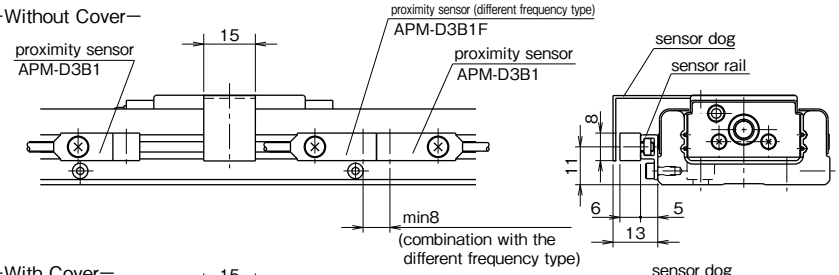

—With Cover—

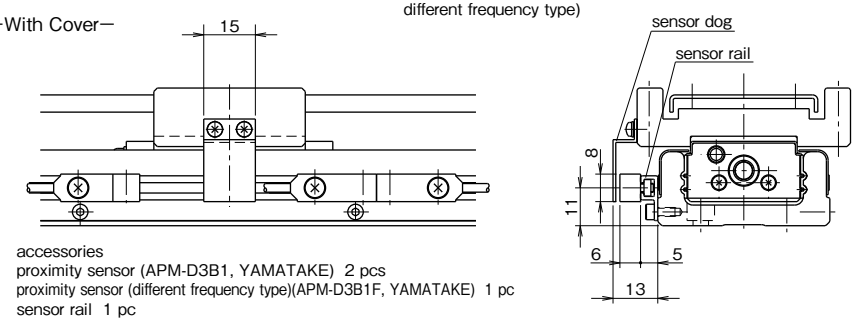

accessories
proximity sensor (APM-D3B1, YAMATAKE) 2 pcs
proximity sensor (different frequency type)(APM-D3B1F, YAMATAKE) 1 pc
sensor rail 1 pc
sensor dog 1 pc

www.bergab.ru Берг АБ bergab@ya.ru Тел. (495)-228-06-21, факс (495) 223-3071

www.bergab.ru Берг АБ bergab@ya.ru Тел. (495)-228-06-21, факс (495) 223-3071

BG33

S Specification (Slim-Type Photomicro Sensor)

—Without Cover—

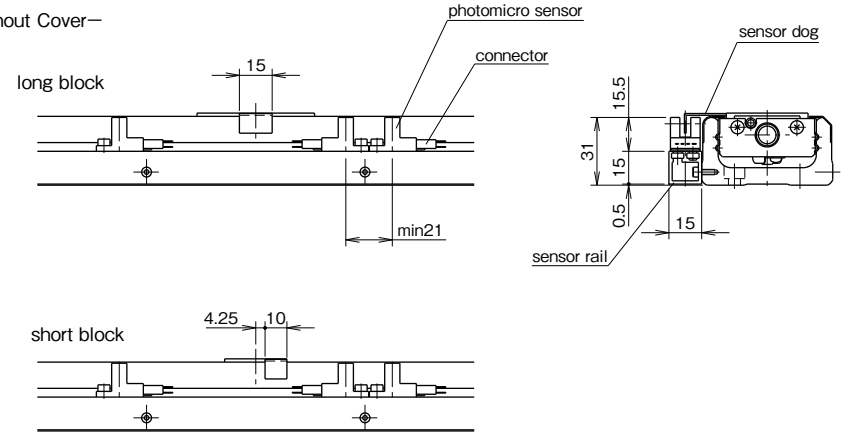

—With Cover—

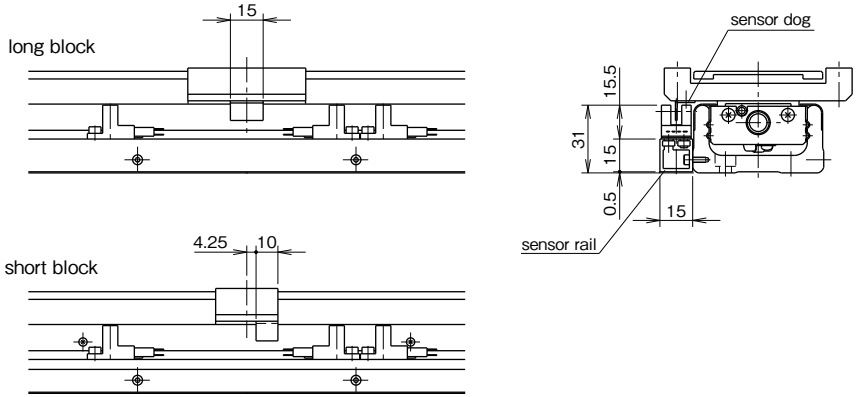

accessories
photomicro sensor (EE-SX674, OMRON) 3 pcs
connector (EE-1001, OMRON) 3 pcs
sensor rail 1 pc
sensor dog *1 pc
* 2 pcs for BG33D-150.

BG33

H Specification (Close Contact Capable Photomicro Sensor)

—Without Cover—

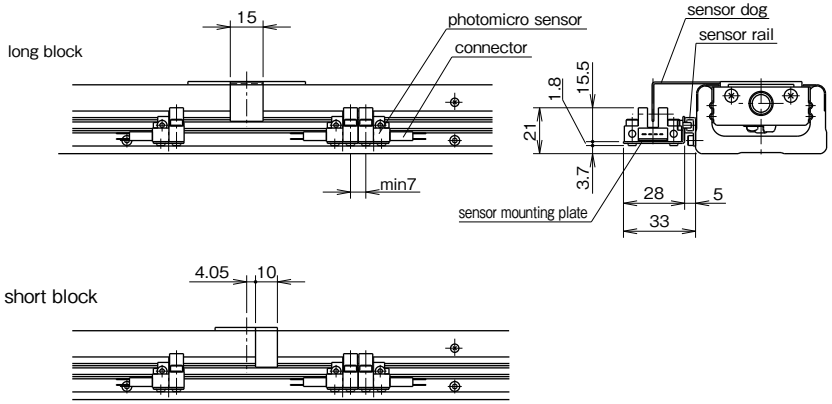

—With Cover—

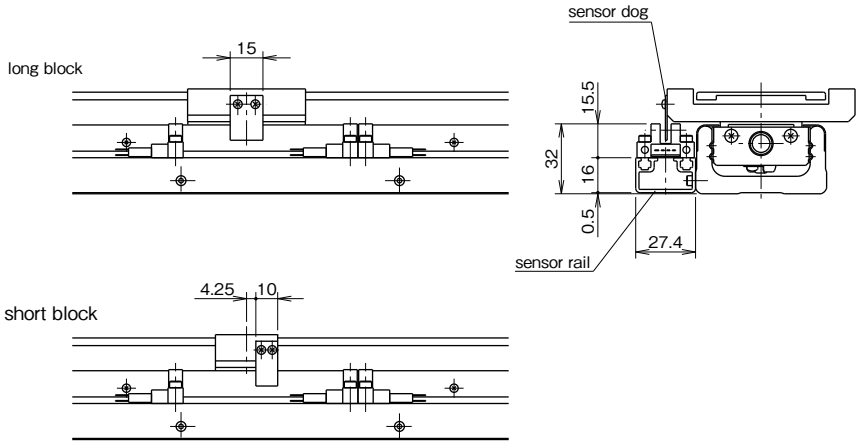

accessories
photomicro sensor (EE-SX671, OMRON) 3 pcs
connector (EE-1001, OMRON) 3 pcs
sensor mounting plate (only for the without cover type) 3 pcs
sensor rail 1 pc
sensor dog *1 pcs
* 2 pcs for BG33D-150.

www.bergab.ru Берг АБ bergab@ya.ru Тел. (495)-228-06-21, факс (495) 223-3071

www.bergab.ru Берг АБ bergab@ya.ru Тел. (495)-228-06-21, факс (495) 223-3071

BG33

K Specification (Proximity Sensor)

—Without Cover—

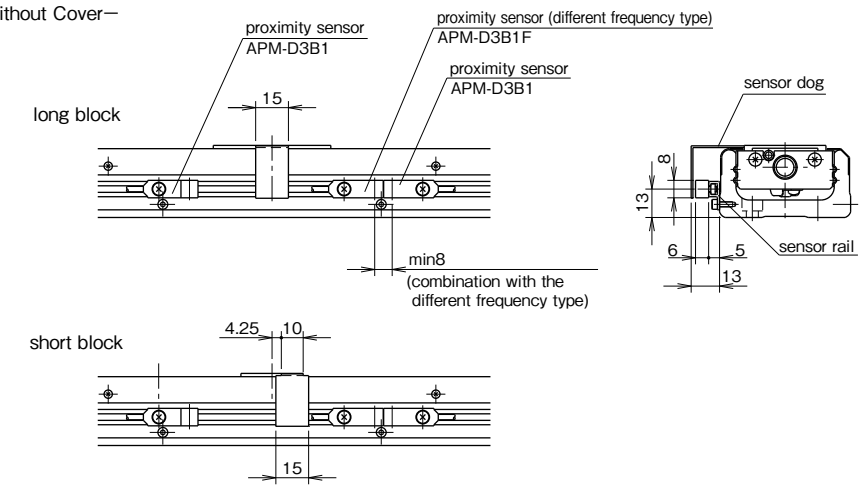

—With Cover—

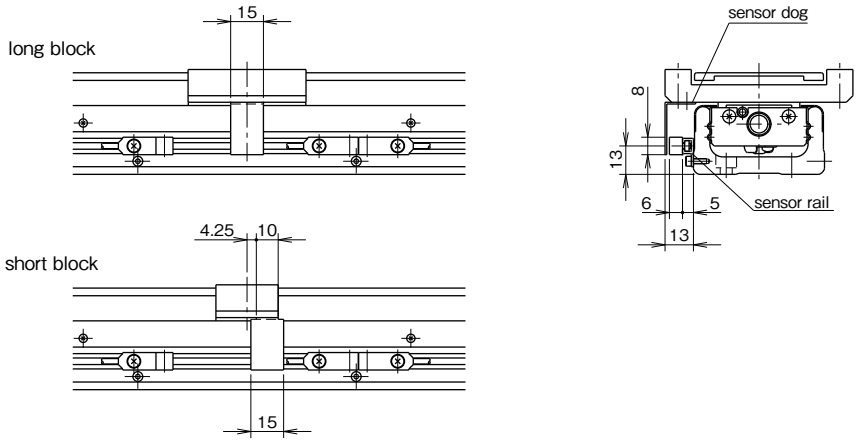

accessories
proximity sensor (APM-D3B1, YAMATAKE) 2 pcs
proximity sensor (different frequency type)(APM-D3B1F, YAMATAKE) 1 pc
sensor rail 1 pc
sensor dog *1 pc
* 2 pcs for BG33D-150.

BG46

S Specification (Slim-Type Photomicro Sensor)

—Without Cover—

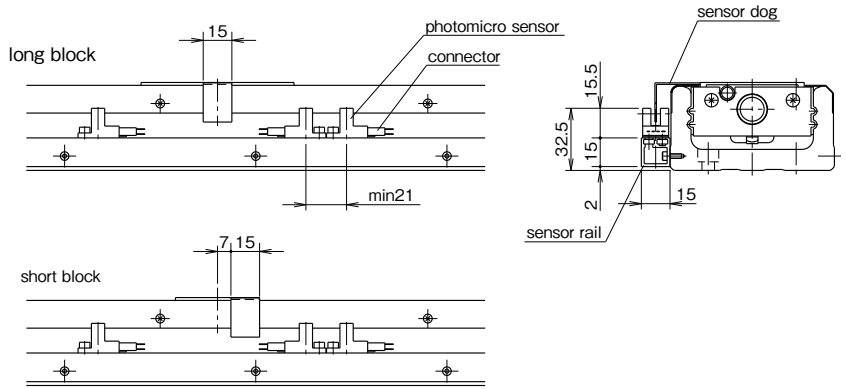

—With Cover—

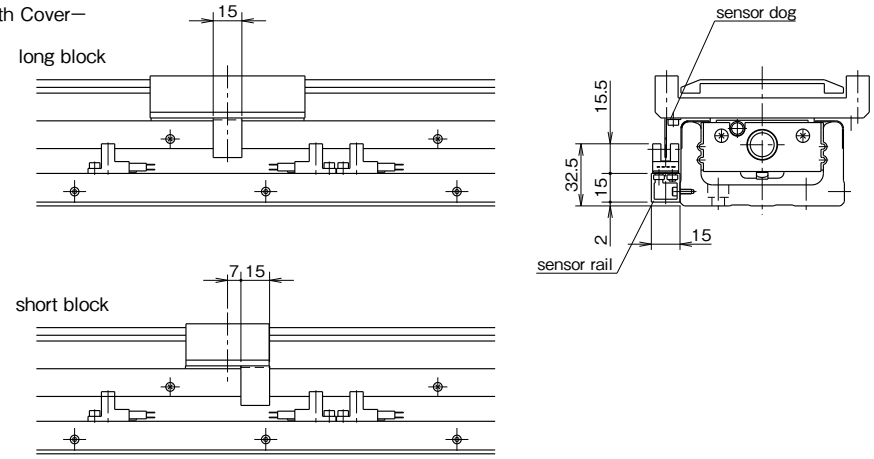

accessories
photomicro sensor (EE-SX674, OMRON) 3 pcs
connector (EE-1001, OMRON) 3 pcs
sensor rail 1 pc
sensor dog 1 pc

www.bergab.ru Берг АБ bergab@ya.ru Тел. (495)-228-06-21, факс (495) 223-3071

www.bergab.ru Берг АБ bergab@ya.ru Тел. (495)-228-06-21, факс (495) 223-3071

BG46

H Specification (Close Contact Capable Photomicro Sensor)

—Without Cover—

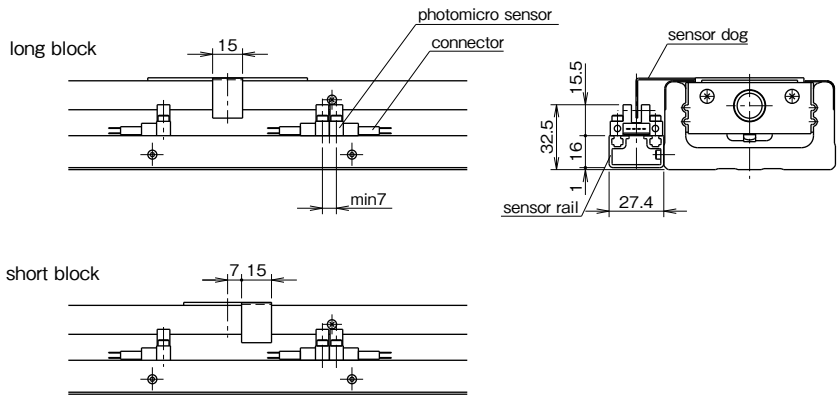

—With Cover—

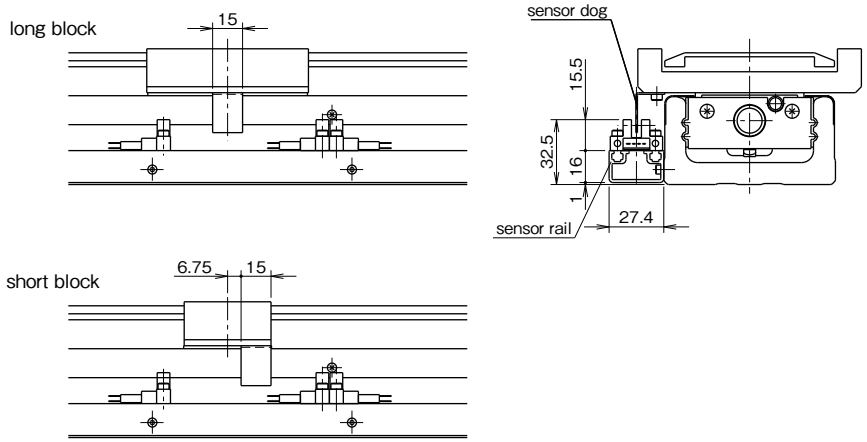

accessories
photomicro sensor (EE-SX671, OMRON) 3 pcs
connector (EE-1001, OMRON) 3 pcs
sensor rail 1 pc
sensor dog 1 pc

BG46

K Specification (Proximity Sensor)

—Without Cover—

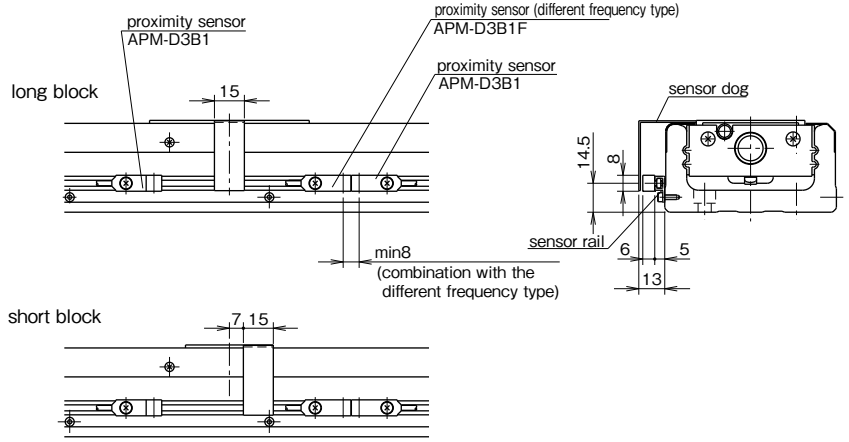

—With Cover—

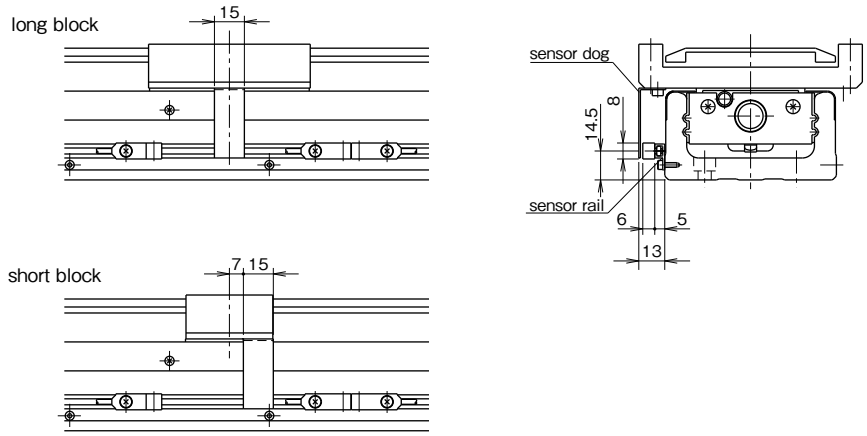

accessories
proximity sensor (APM-D3B1, YAMATAKE) 2 pcs
proximity sensor (different frequency type)(APM-D3B1F, YAMATAKE) 1 pc
sensor rail 1 pc
sensor dog 1 pc

www.bergab.ru Берг АБ bergab@ya.ru Тел. (495)-228-06-21, факс (495) 223-3071

www.bergab.ru Берг АБ bergab@ya.ru Тел. (495)-228-06-21, факс (495) 223-3071

BG55

S Specification (Compact Photomicro Sensor)

—Without Cover—

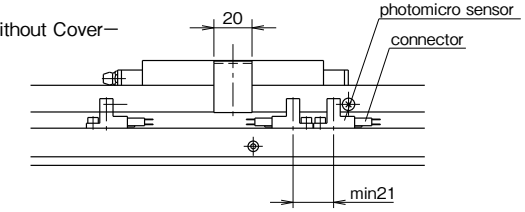

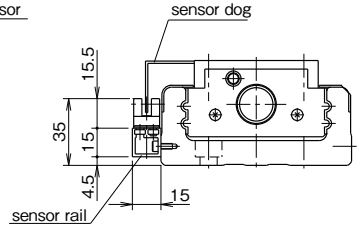

—With Cover—

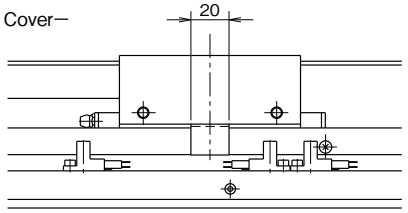

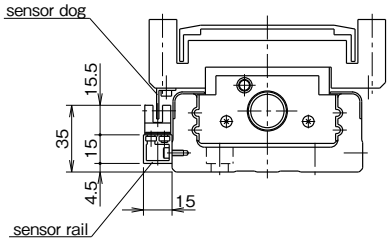

accessories
photomicro sensor (EE-SX674, OMRON) 3 pcs
connector (EE-1001, OMRON) 3 pcs
sensor rail 1 pc
sensor dog 1 pc

H Specification (Close Contact Capable Photomicro Sensor)

—Without Cover—

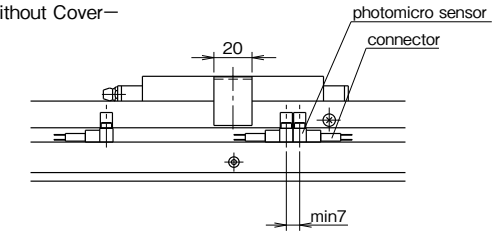

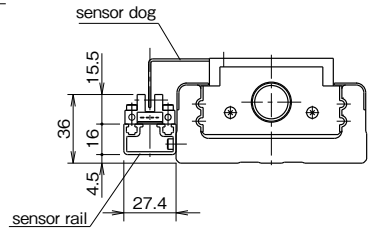

—With Cover—

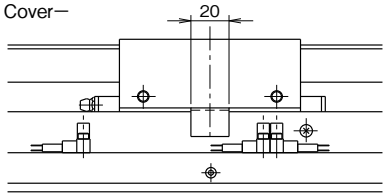

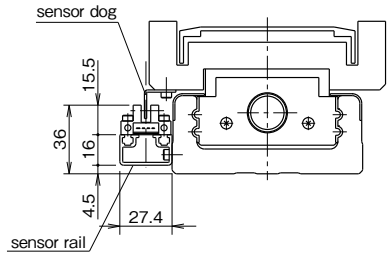

accessories
photomicro sensor (EE-SX671, OMRON) 3 pcs
connector (EE-1001, OMRON) 3 pcs
sensor rail 1 pc
sensor dog 1 pc

BG55

K Specification (Proximity Sensor)

—Without Cover—

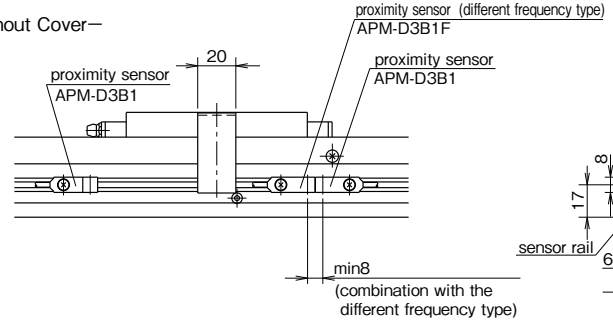

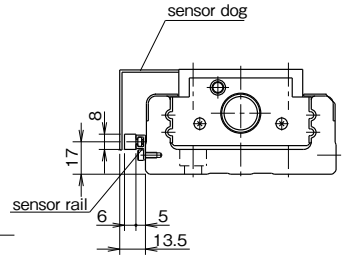

—With Cover—

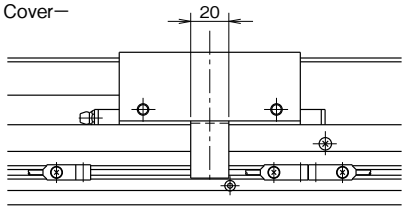

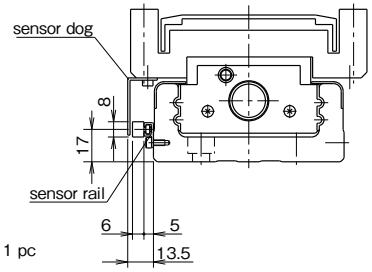

accessories
proximity sensor (APM-D3B1, YAMATAKE) 2 pcs
proximity sensor (different frequency type)(APM-D3B1F, YAMATAKE) 1 pc
sensor rail 1 pc
sensor dog 1 pc

PNP Sensor

For the BG type sensors can be changed to the PNP type by adding a sensor option code "PNP" at the end of the part number.
Refer to Table H-16 for the model number of PNP type sensors.

Table H-16 Sensor Type

sensor code	sensor type	applicable model type	standard specification	PNP specification model type
S	slim-type photomicro sensor	BG33, BG46, BG55	EE-SX674	EE-SX674P
	compact photomicro sensor	BG20, BG26	PM-L24	PM-L24P
H	close contact capable photomicro sensor	BG33, BG46, BG55	EE-SX671	EE-SX671P
K	proximity sensor	all model types	APM-D3B1	APM-D3E1
	proximity sensor (different frequency type)	all model types	APM-D3B1F	APM-D3E1F

www.bergab.ru Берг АБ bergab@ya.ru Тел. (495)-228-06-21, факс (495) 223-3071

www.bergab.ru Берг АБ bergab@ya.ru Тел. (495)-228-06-21, факс (495) 223-3071

SENSOR SPECIFICATIONS

slim-type, close contact capable photomicro sensor (symbol: S,H)/ OMRON CORPORATION

type	NPN TYPE	EE-SX674	EE-SX671
	PNP TYPE	EE-SX674P	EE-SX671P
sensing distance		5mm (slot width)	
standard sensing object		opaque: 2×0.8mm min.	
differential travel		0.025mm	
power supply voltage		5 to 24 VDC ±10% , ripple(P-P): 10% max.	
current consumption		35mA max. (NPN), 30 mA max.(PNP)	
control output	NPN TYPE	NPN open collector output models: At 5 to 24 VDC: 100-mA load current (Ic) with a residual voltage of 0.8V max.40-mA load current (Ic) with a residual voltage of 0.4V max.	
	PNP TYPE	PNP open collector output models: At 5 to 24 VDC: 50-mA load current (Ic) with a residual voltage of 1.3V max.	
output operation		Dark-On (+, L terminal open-circuit), Light-On (+, L terminal short-cuircuit)	
response frequency		1kHz max. (3kHz average)	
operation indicater		operation indicator (red) lit with incident	
ambient illumination (on receiver lens)		fluorescent light: 1000 ℓx max.	
ambient temperature		operating: -25 to 55℃ storage: -30 to 80℃	
ambient humidity		operating: 5 to 85% RH storage: 5 to 95% RH	
vibration resistance		destruction: 20 to 2000Hz, (with a peak acceleration of 100m/s^2) 1.5mm double amplitude for 2hrs (with 4-minute cycles) each in X,Y, and Z directions	
shock resistance		destruction: 500m/s^2 for 3 times each in X,Y, and Z directions	
degree of protection		IEC60529 IP50	
connection method		connector type (direct soldering possible)	
weight		approx. 3g	
material	case	Polybutylene phthalate (PBT)	
	cover	Polycarbonate (PC)	
	emitter/receiver		

NPN TYPE
CIRCUIT DIAGRAM

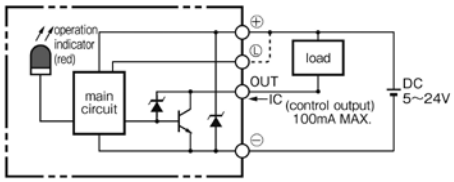

PNPTYPE
CIRCUIT DIAGRAM

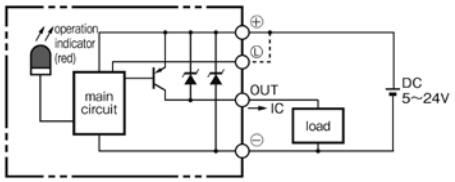

Please read the specifications and precautions of the manufacture's catalog.

compact photomicro sensor (symbol: S)/ SUNX LIMITED

type	NPN TYPE	PM-L24
	PNP TYPE	PM-L24P
sensing range		5mm (fixed)
minimum sensing object		0.8×1.8mm min. opaque
hysteresis		0.05mm or less
repeatability		0.03mm or less
supply voltage		5 to 24 VDC ±10% , ripple(P-P) 10% or less
current consumption		15mA or less
output	NPN TYPE	NPN open-collector transistor maximum sink current: 50mA, applied voltage: 30VDC or less (between output and 0V) residual voltage: 0.7V or less (at 50mA sink current) 0.4V or less (at 16mA sink current)
	PNP TYPE	PNP open-collector transistor maximum source current: 50mA, applied voltage: 30VDC or less (between output and +V) residual voltage: 0.7V or less (at 50mA sink current) 0.4V or less (at 16mA sink current)
output operation		Incorporated with 2 outputs: Light-ON/Dark-ON
response time		under light received condition: 20μs or less under light interrupted condition: 100μs or less (response frequency: 1kHz or more)
operation indicater		vermilion LED (lights up under light received condition)
ambient illuminance		fluorescent light: 1000ℓx at the light-receiving face
ambient temperature		operating: -25 to 55℃ (No dew condensation or icing allowed.) storage: -30 to 80℃
ambient humidity		35 to 85% RH storage: 35 to 85% RH
voltage withstandability		1000V AC for one min. between all supply terminals connected together and enclosure
insulation resistance		50MΩ, or more, with 250V DC megger between all supply terminals connected togeter and enclosure
vibration resistance		10 to 2,000Hz frequency, 1.5mm amplitude in X, Y, and Z directions for two hours each
shock resistance		15,000m/s^2 acceleration (1,500 G approx.) in X, Y, and Z directions for three times each
cable		0.09mm^2 4-core cabtyre cable 1m long
weight		approx. 10g
material	case	Polybutylene phthalate (PBT)
	cover	Polycarbonate

NPN TYPE
CIRCUIT DIAGRAM

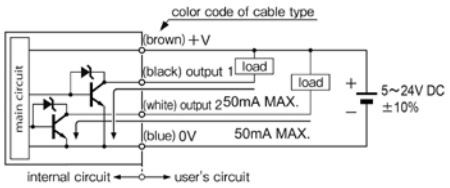

PNP TYPE
CIRCUIT DIAGRAM

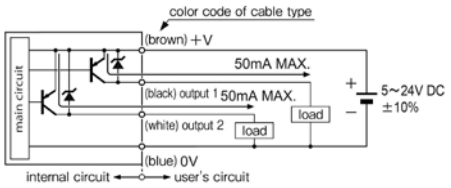

Please read the specifications and precautions of the manufacture's catalog.

www.bergab.ru Берг АБ bergab@ya.ru Тел. (495)-228-06-21, факс (495) 223-3071

www.bergab.ru Берг АБ bergab@ya.ru Тел. (495)-228-06-21, факс (495) 223-3071

proximity sensor (symbol: K)/ YAMATAKE CORPORATION

type	NPN TYPE	APM-D3B1,APM-D3B1F(different-frequency type)
	PNP TYPE	APM-D3E1,APM-D3E1F(different-frequency type)
rated sensing distance		2.5mm±15%
standard target object		15×15mm, 1mm thick iron
differential travel		15% max. of sensing distance
rated supply voltage		12/24VDC
operating voltage range		10.8 to 26.4 VDC (ripple voltage 10% max.)
current consumption		10mA max.
control output	NPN TYPE	NPN transistor open collector switching current: 30mA max. (resistive load) voltage drop: 1V max. (switching current 30mA) output dielectric strength: 26.4V
	PNP TYPE	PNP transistor open collector switching current: 30mA max. (resistive load) voltage drop: 1V max. (switching current 30mA) output dielectric strength: 26.4V
operation mode		normally closed (N.C.)
operating frequency		120Hz
indicator lamps		lights (red) when object approaches
operating temperature range		-10 to 55℃ storage: -25 to 70℃
operating humidity range		35 to 85% RH
ambient illumination(on receiver lens)		fluorescent light: 1000lxmax.
dielectric strength		1000V AC (50/60Hz) for one min. between case and electrically live metals
insulation resistance		50MΩ min. (by 500V DC megger)
vibration resistance		10 to 55Hz, 1.5mm peak-to-peak amplitude, 2hrs in X, Y, and Z directions
voltage withstandability		1000V AC(50/60Hz) for one min. between all supply terminals connected together and enclosure
insulation resistance		50MΩ, or more(with 500V DC megger)
shock resistance		500m/s² 3 times in Y,Y, and Z directions
protection		IP67 (IEC 529)
weight		approx. 10g

NPN TYPE
CIRCUIT DIAGRAM

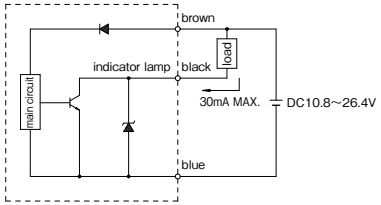

PNP TYPE
CIRCUIT DIAGRAM

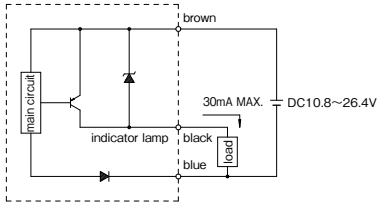

Please read the specifications and precautions of the manufacture's catalog.

BELLOWS

BG type can be specified with a cover or bellows for dust prevention. Bellows are securely fixed for various installation methods in positioning and directions. Sensor for bellows is limited to K (proximity sensor) type only, which is pre-installed at proper positions. Please pay attention to the stroke limit of BG with bellows that is shorter than the standard stroke limit.

— Position of Sensor Cable Outlet —

The positions of the outlet for sensor cables can be selected as Figure H-16 shows.

Figure H-16 Position of Sensor Cable Outlet

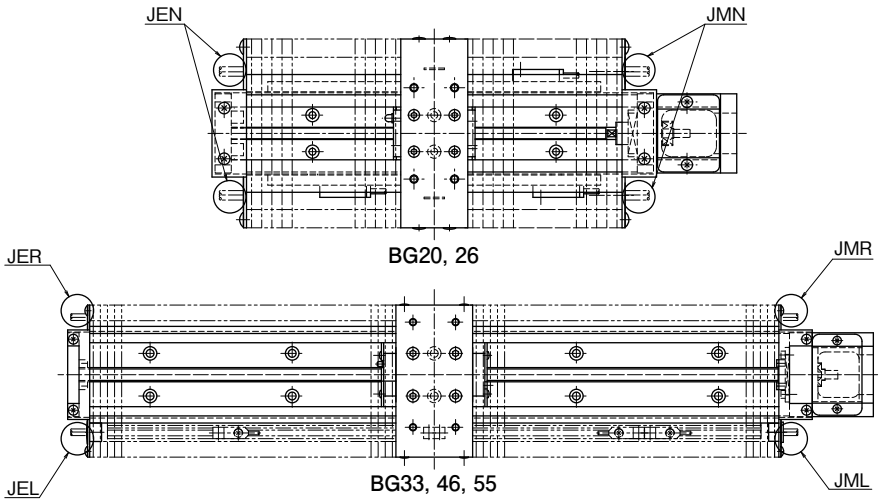

※ The above drawing shows the J*L position. The sensor rail is reversed for the J*R position.

part number structure for bellows

1. J (for the first symbol)
2. Specification of the position of the sensor cable outlet
   Please select the motor side or the housing side.
   M: motor side E: housing side (end plate side)
3. Specification of the position of the sensor rail
   Please select the right hand or the left hand.
   R: on the right from the motor side
   L: on the left from the motor side
   ※N for BG20 and 26 since the sensors are mounted on both the right and left hand.
4. JNN for without sensors
5. Sensor type is K (proximity sensor) type only (APM-D3 series: YAMATAKE CORPORATION).

— Sensor Timing Chart —

The following chart shows the standard sensor arrangement.

Figure H-17 Sensor Timing Chart

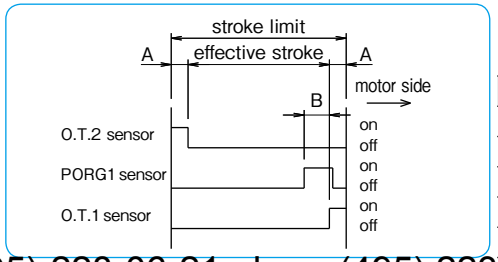

part number	A	B
BG20	5	8
BG26	5	13
BG33	10	13
BG46	10	13
BG55	10	13

www.bergab.ru Берг АБ bergab@ya.ru Тел. (495)-228-06-21, факс (495) 223-3071

www.bergab.ru Берг АБ bergab@ya.ru Тел. (495)-228-06-21, факс (495) 223-3071

BG20A, B

—1 long block—

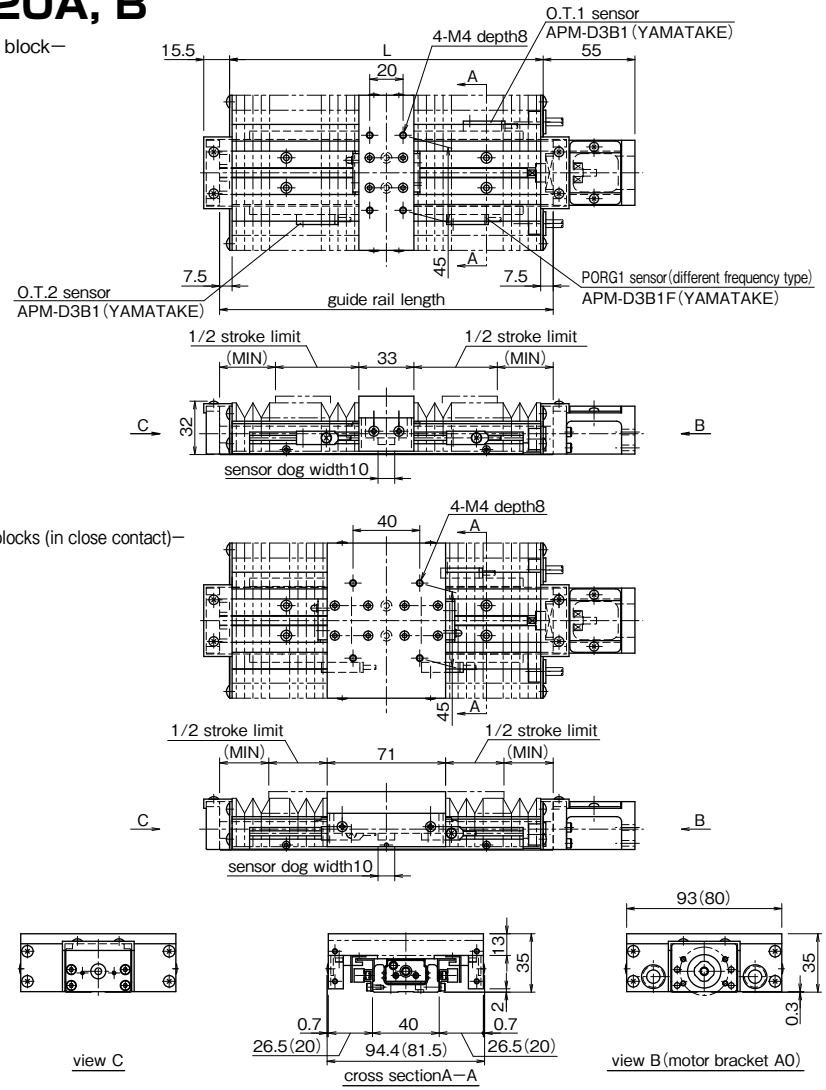

1. The drawings show the "JMN" configuration.
2. The numbers in the parentheses are the dimensions when sensors are not selected.
3. Please refer to page H-56 for dimensions that are not shown on the drawings.
4. material of bellows: composite resin sheet (shining black)

rail length	L	1 long block			2 long blocks		
		stroke limit	effective stroke	MIN	stroke limit	effective stroke	MIN
100	—	—	—	—	—	—	—
150※	138	58	48	29.5	32	22	23.5
200	188	100	90	33.5	70	60	29.5

※The rail mounting holes at the center cannot be used for the rail length 150 with two long blocks.

BG26A, B

—1 long block—

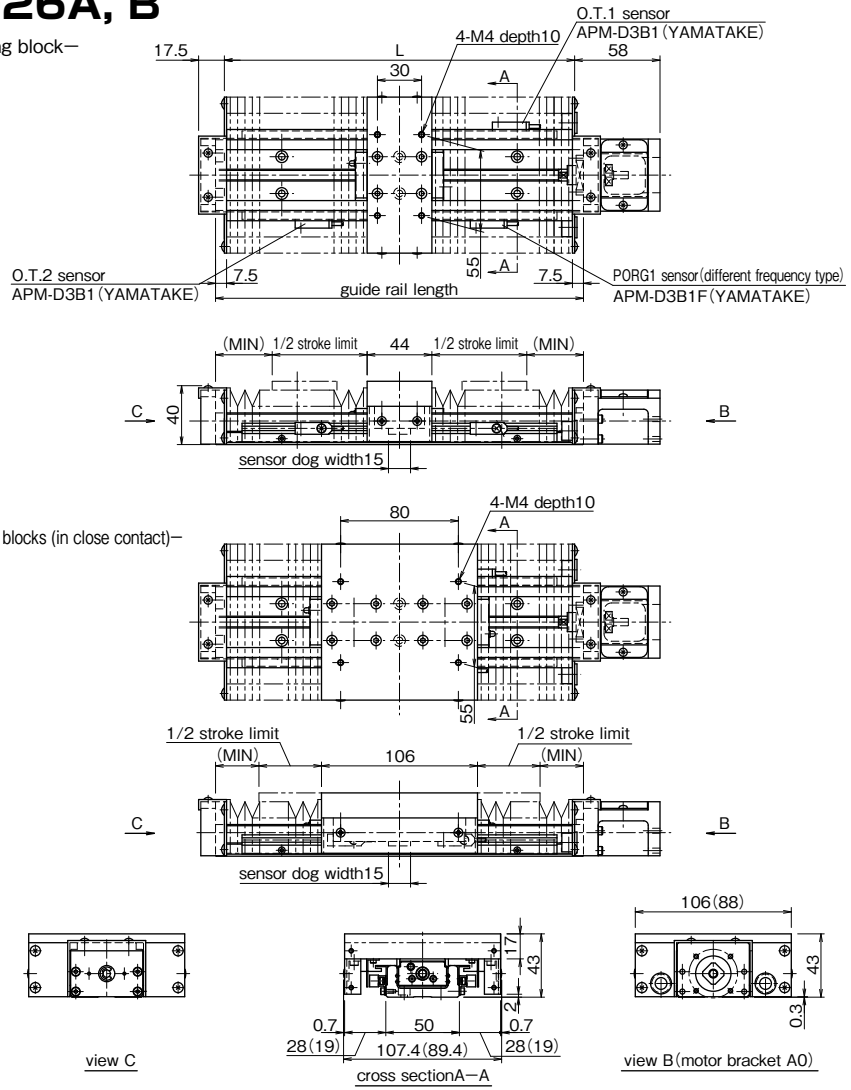

1. The drawings show the "JMN" configuration.
2. The numbers in the parentheses are the dimensions when sensors are not selected.
3. Please refer to page H-58 for dimensions that are not shown on the drawings.
4. material of bellows: composite resin sheet (shining black)

rail length	L	1 long block			2 long blocks		
		stroke limit	effective stroke	MIN	stroke limit	effective stroke	MIN
150	138	53	43	26.5	—	—	—
200※	188	97	87	29.5	41	31	26.5
250	238	129	119	38.5	85	75	29.5
300	288	169	159	43.5	127	117	33.5

※The rail mounting holes at the center cannot be used for the rail length 200 with two long blocks.

www.bergab.ru Берг АБ bergab@ya.ru Тел. (495)-228-06-21, факс (495) 223-3071

www.bergab.ru Берг АБ bergab@ya.ru Тел. (495)-228-06-21, факс (495) 223-3071

BG33A, B

—1 long block—

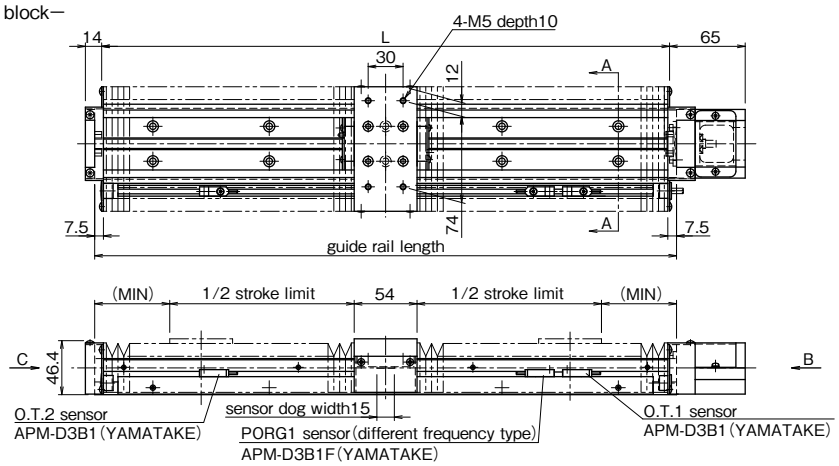

—2 long blocks (in close contact)—

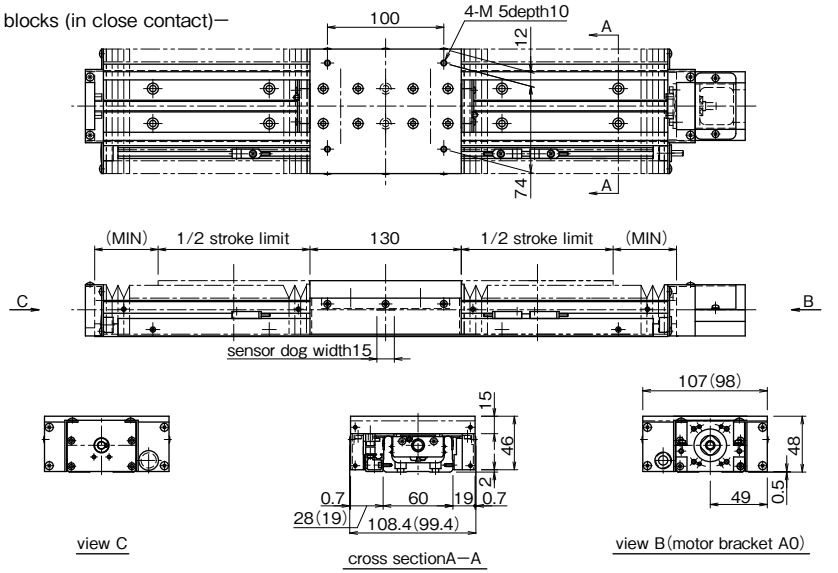

1. The drawings show the "JML" configuration. The cross sections become reversed when "J*R" is selected.
2. The numbers in the parentheses are the dimensions when sensors are not selected.
3. Please refer to page H-60 for dimensions that are not shown on the drawings.
4. material of bellows: composite resin sheet (shining black)

rail length	L	1 long block			2 long blocks		
		stroke limit	effective stroke	MIN	stroke limit	effective stroke	MIN
150	—	—	—	—	—	—	—
200	188	79	59	33.5	—	—	—
300※	288	159	139	43.5	103	83	33.5
400	388	237	217	54.5	183	163	43.5
500	488	317	297	64.5	261	241	54.5
600	588	395	375	75.5	341	321	64.5

※The rail mounting holes at the center cannot be used for the rail length 300 with two long blocks.

BG33C, D

—1 short block—

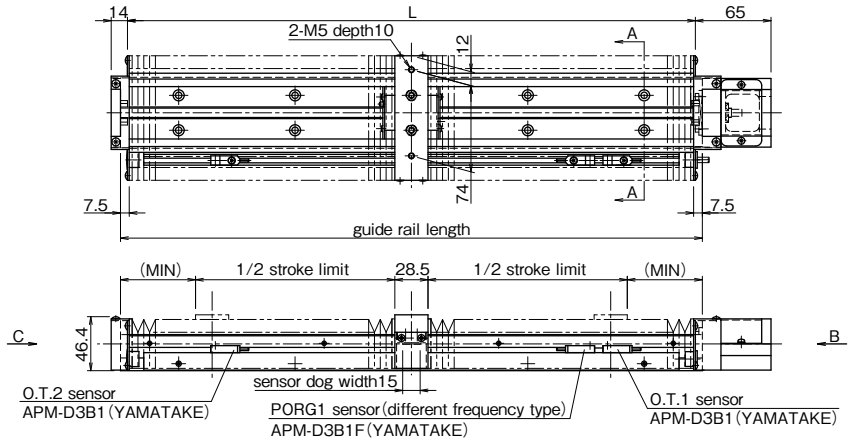

—2 short blocks (in close contact)—

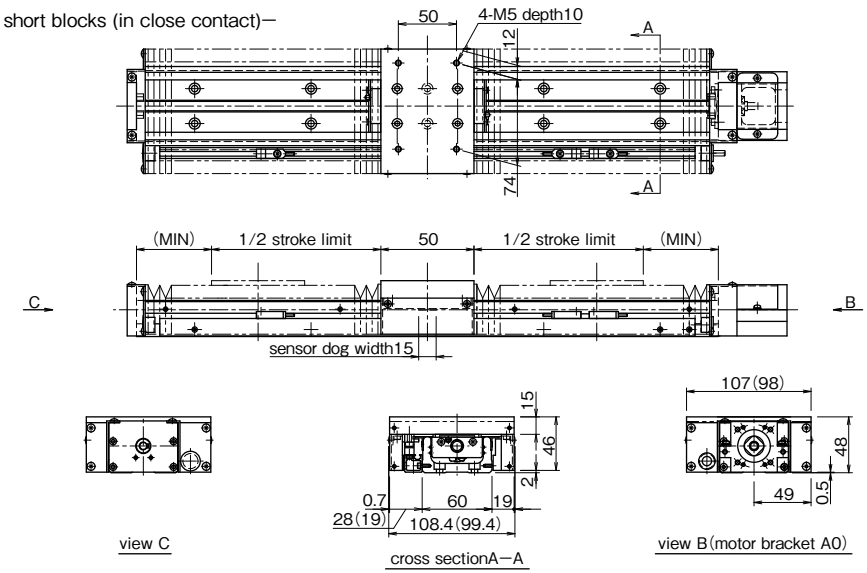

1. The drawings show the "JML" configuration. The cross sections become reversed when "J*R" is selected.
2. The numbers in the parentheses are the dimensions when sensors are not selected.
3. Please refer to page H-62 for dimensions that are not shown on the drawings.
4. material of bellows: composite resin sheet (shining black)

rail length	L	1 short block			2 short blocks		
		stroke limit	effective stroke	MIN	stroke limit	effective stroke	MIN
150	138	68.5	48.5	26.5	—	—	—
200	188	104.5	84.5	33.5	67	47	26.5
300	288	184.5	164.5	43.5	143	123	38.5
400	388	262.5	242.5	54.5	211	191	54.5
500	488	342.5	322.5	64.5	291	271	64.5
600	588	404.5	384.5	83.5	369	349	75.5

www.bergab.ru Берг АБ bergab@ya.ru Тел. (495)-228-06-21, факс (495) 223-3071

www.bergab.ru Берг АБ bergab@ya.ru Тел. (495)-228-06-21, факс (495) 223-3071

BG46A, B

—1 long block—

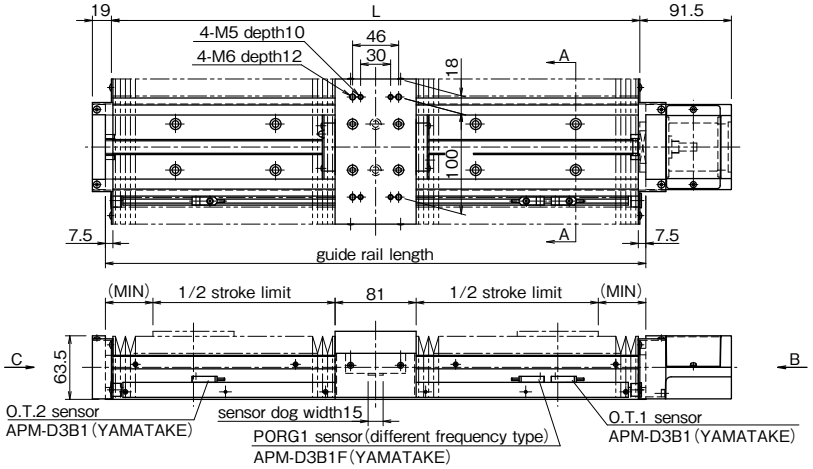

—2 long blocks (in close contact)—

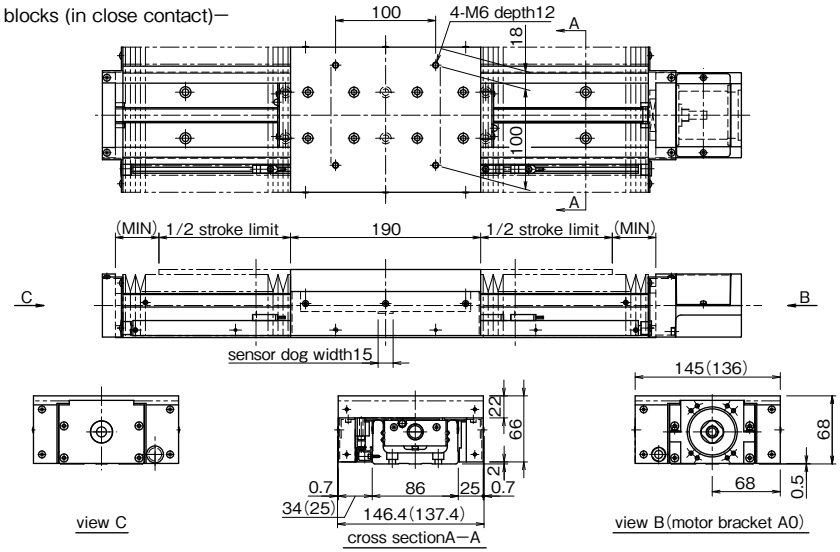

1. The drawings show the "JML" configuration. The cross sections become reversed when "J*R" is selected.
2. The numbers in the parentheses are the dimensions when sensors are not selected.
3. Please refer to page H-64 for dimensions that are not shown on the drawings.
4. material of bellows: composite resin sheet (shining black)

rail length	L	1 long block			2 long blocks		
		stroke limit	effective stroke	MIN	stroke limit	effective stroke	MIN
340※	328	192	172	33.5	97	77	26.5
440	428	272	252	43.5	183	163	33.5
540	528	364	344	47.5	263	243	43.5
640	628	450	430	54.5	355	335	47.5
740	728	530	510	64.5	441	421	54.5
840	828	608	588	75.5	521	501	64.5
940	928	686	666	86.5	599	579	75.5
1,040	1,028	774	754	92.5	677	657	86.5
1,140	1,128	866	846	96.5	765	745	92.5
1,240	1,228	944	924	107.5	857	837	96.5

※The rail mounting holes at the center cannot be used for the rail length 340 with two short or long blocks.

BG46C, D

—1 short block—

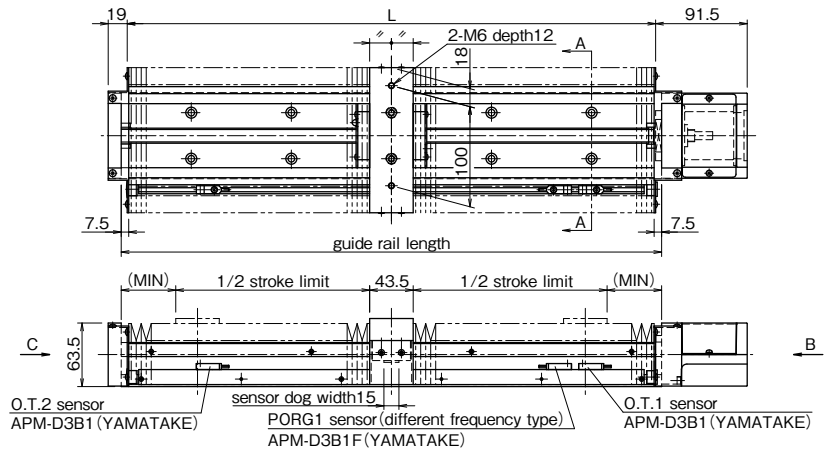

—2 short blocks (in close contact)—

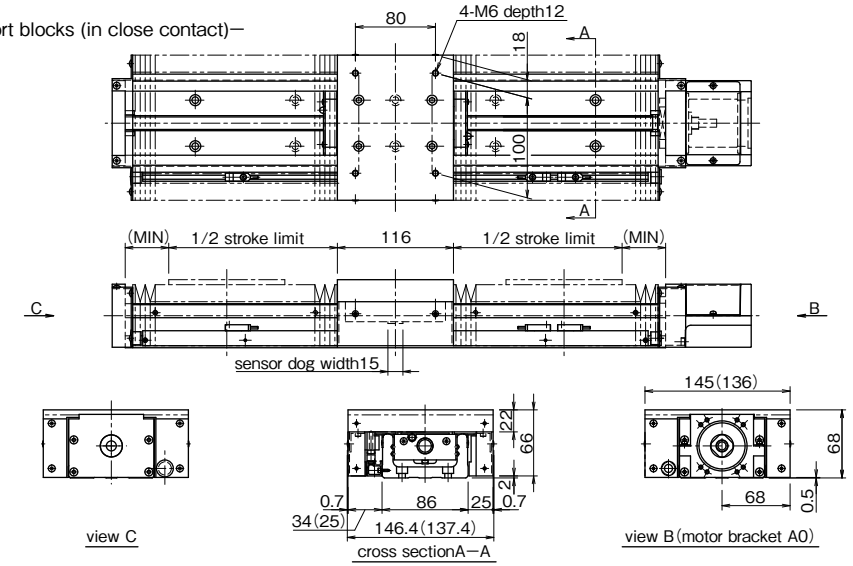

1. The drawings show the "JML" configuration. The cross sections become reversed when "J*R" is selected.
2. The numbers in the parentheses are the dimensions when sensors are not selected.
3. Please refer to page H-66 for dimensions that are not shown on the drawings.
4. material of bellows: composite resin sheet (shining black)

rail length	L	1 short block			2 short blocks		
		stroke limit	effective stroke	MIN	stroke limit	effective stroke	MIN
340※	328	219.5	199.5	38.5	165	145	29.5
440	428	309.5	289.5	43.5	247	227	38.5
540	528	387.5	367.5	54.5	337	317	43.5
640	628	467.5	447.5	64.5	415	395	54.5
740	728	545.5	525.5	75.5	495	475	64.5
840	828	645.5	625.5	75.5	573	553	75.5
940	928	723.5	703.5	86.5	651	631	86.5
1,040	1,028	803.5	783.5	96.5	751	731	86.5
1,140	1,128	881.5	861.5	107.5	831	811	96.5
1,240	1,228	981.5	961.5	107.5	909	889	107.5

※The rail mounting holes at the center cannot be used for the rail length 340 with two short or long blocks.

www.bergab.ru Берг АБ bergab@ya.ru Тел. (495)-228-06-21, факс (495) 223-3071

www.bergab.ru Берг АБ bergab@ya.ru Тел. (495)-228-06-21, факс (495) 223-3071

BG55A, B

—1 long block—

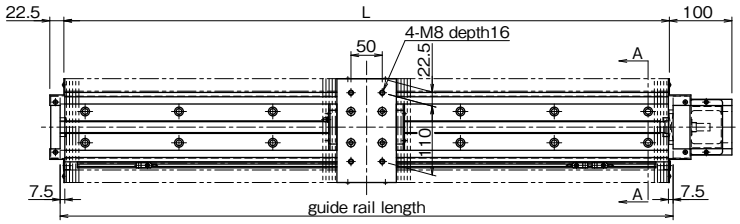

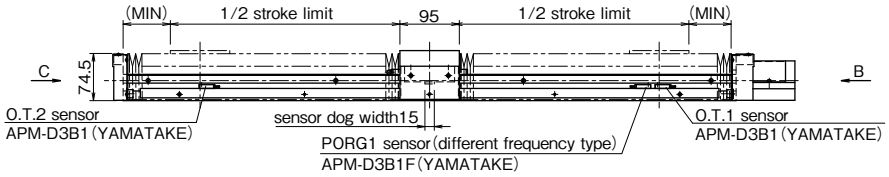

—2 long blocks (in close contact)—

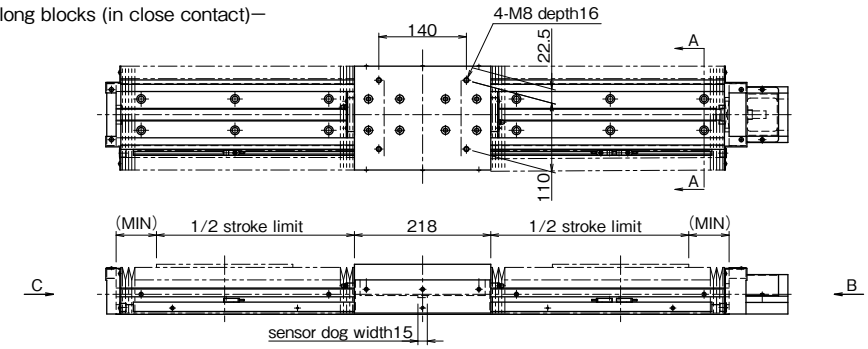

1. The drawings show the "JML" configuration. The cross sections become reversed when "J*R" is selected.
2. The numbers in the parentheses are the dimensions when sensors are not selected.
3. Please refer to page H-68 for dimensions that are not shown on the drawings.
4. material of bellows: composite resin sheet (shining black)

rail length	L	1 long block			2 long blocks		
		stroke limit	effective stroke	MIN	stroke limit	effective stroke	MIN
980	968	734	714	75.5	633	613	64.5
1,080	1,068	812	792	86.5	711	691	75.5
1,180	1,168	912	892	86.5	789	769	86.5
1,280	1,268	992	972	96.5	889	869	86.5
1,380	1,368	1,070	1,050	107.5	969	949	96.5

POSITIONING PIN HOLE

For the BG type, positioning pin holes can be provided on the slide block or the sub-table by adding the option code "PS" or "PW" at the end of the part number. When two blocks are used in the BG, the both blocks will be processed.
It is useful when exacting reassembly positioning is required.
When the code "PS" is added, the drilling is processed only on the mounting surface. On the other hand, when the code "PW" is specified for a BG with a cover, straight pins will be used at the connecting area of the slide block and the sub table (although the position is the same as the for "PS").
Note that only hole drilling is processed to the mounting surface and that no straight pin is provided.
NB provides bellows with the positioning pin hole option. Please contact NB for dimensions of the bellows.

BG20A, B

—Without Cover—

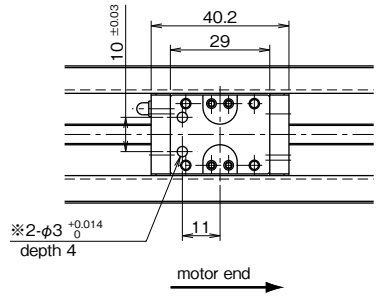

—With Cover—

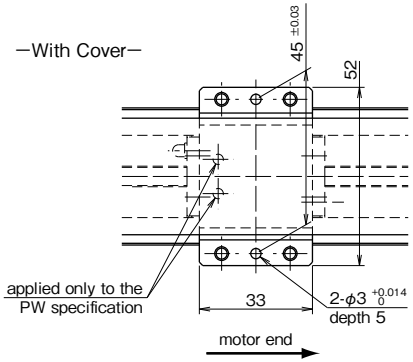

※For some cases, a shallow counterbore of φ4 will be machined at the hole area with "※" to remove a hardened layer.

BG26A, B

—Without Cover—

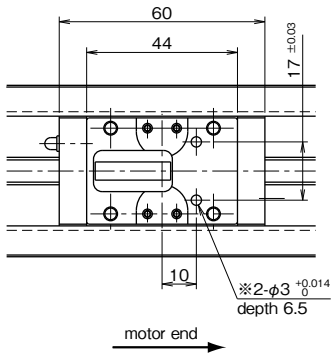

—With Cover—

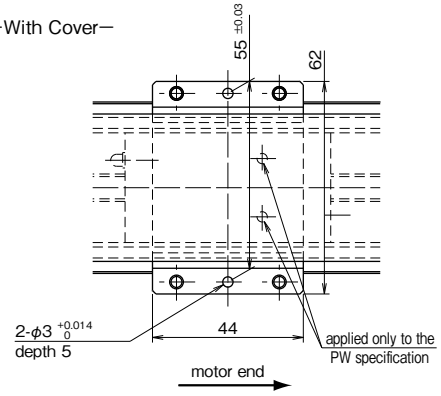

※For some cases, a shallow counterbore of φ4 will be machined at the hole area with "※" to remove a hardened layer.

www.bergab.ru Берг АБ bergab@ya.ru Тел. (495)-228-06-21, факс (495) 223-3071

www.bergab.ru Берг АБ bergab@ya.ru Тел. (495)-228-06-21, факс (495) 223-3071

BG33A, B

—Without Cover—

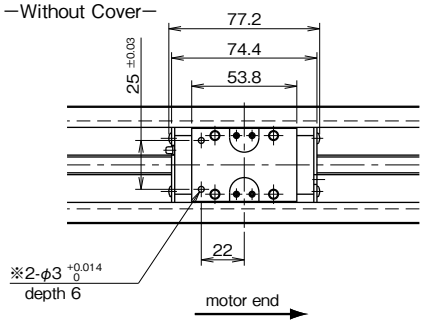

—With Cover—

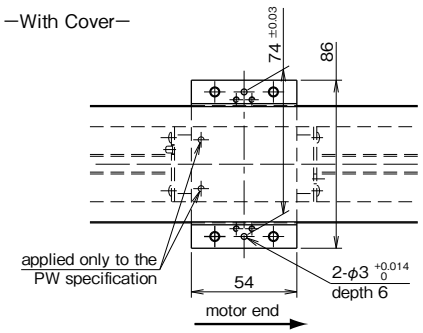

※For some cases, a shallow counterbore of φ4 will be machined at the hole area with "※" to remove a hardened layer.

BG33C, D

—Without Cover—

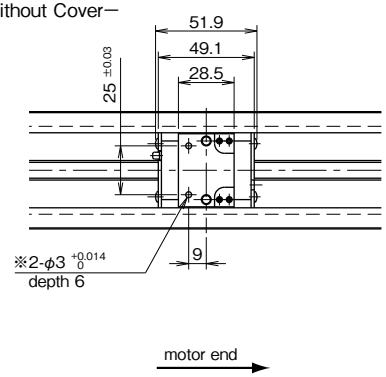

—With Cover—

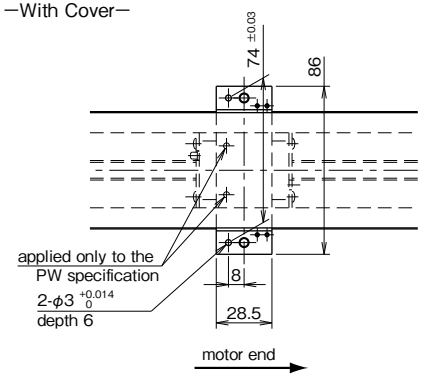

※For some cases, a shallow counterbore of φ4 will be machined at the hole area with "※" to remove a hardened layer.

BG46A, B

—Without Cover—

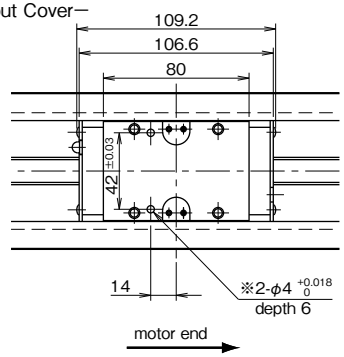

—With Cover—

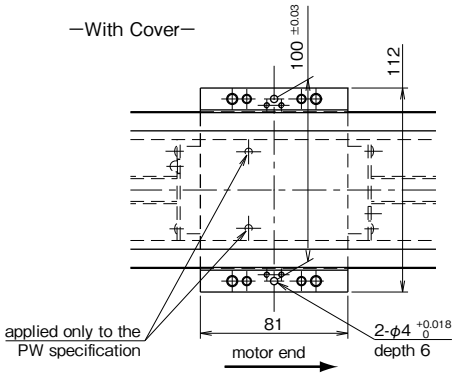

※For some cases, a shallow counterbore of φ5 will be machined at the hole area with "※" to remove a hardened layer.

BG46C, D

—Without Cover—

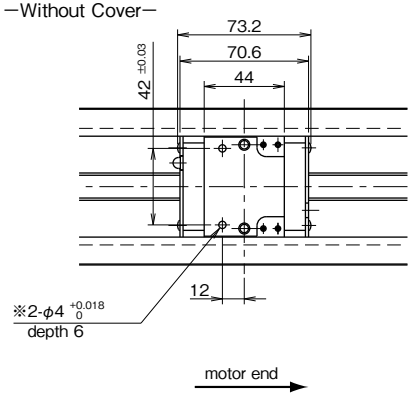

—With Cover—

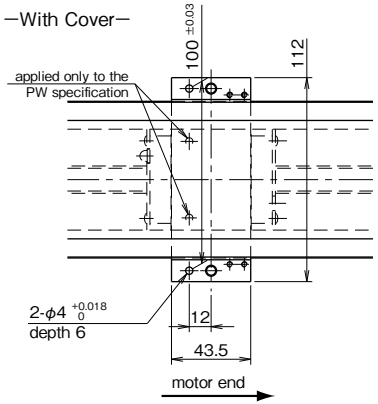

※For some cases, a shallow counterbore of φ5 will be machined at the hole area with "※" to remove a hardened layer.

BG55A, B

—Without Cover—

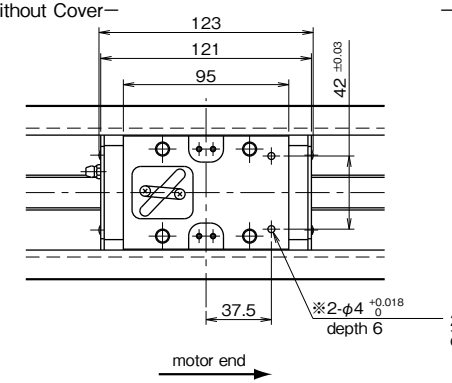

—With Cover—

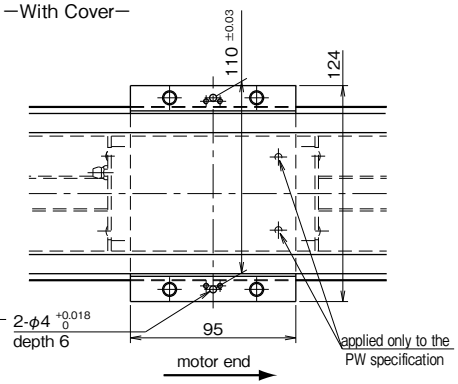

※For some cases, a shallow counterbore of φ5 will be machined at the hole area with "※" to remove a hardened layer.

www.bergab.ru Берг АБ bergab@ya.ru Тел. (495)-228-06-21, факс (495) 223-3071

www.bergab.ru Берг АБ bergab@ya.ru Тел. (495)-228-06-21, факс (495) 223-3071

BG20A, B

—Without Top Cover—

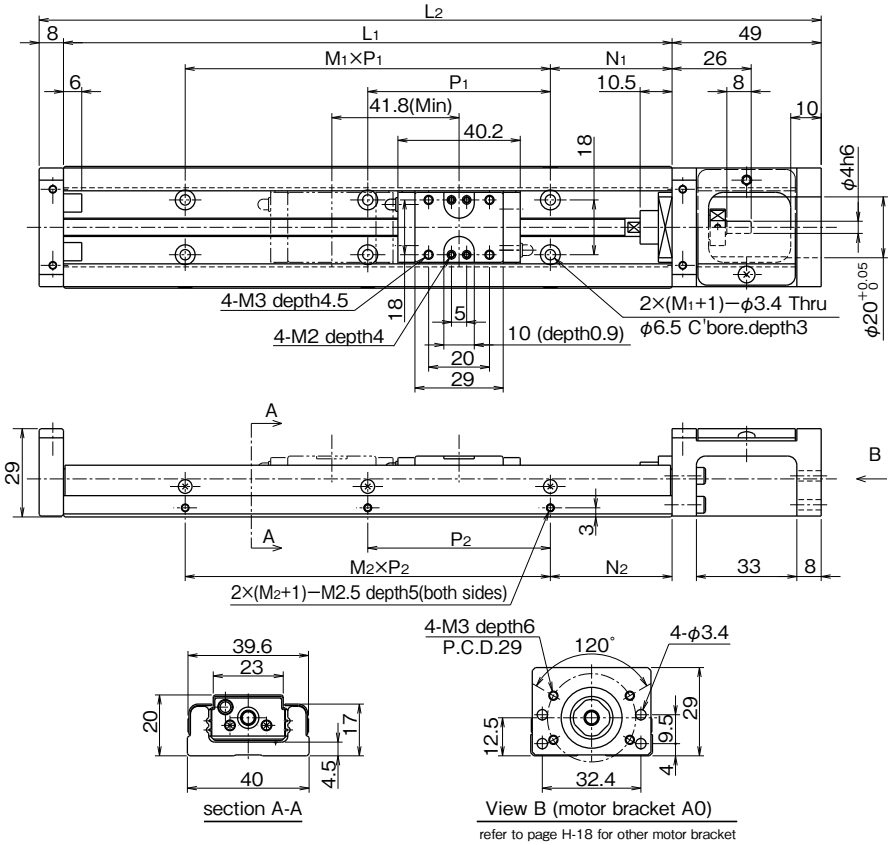

—With Top Cover—

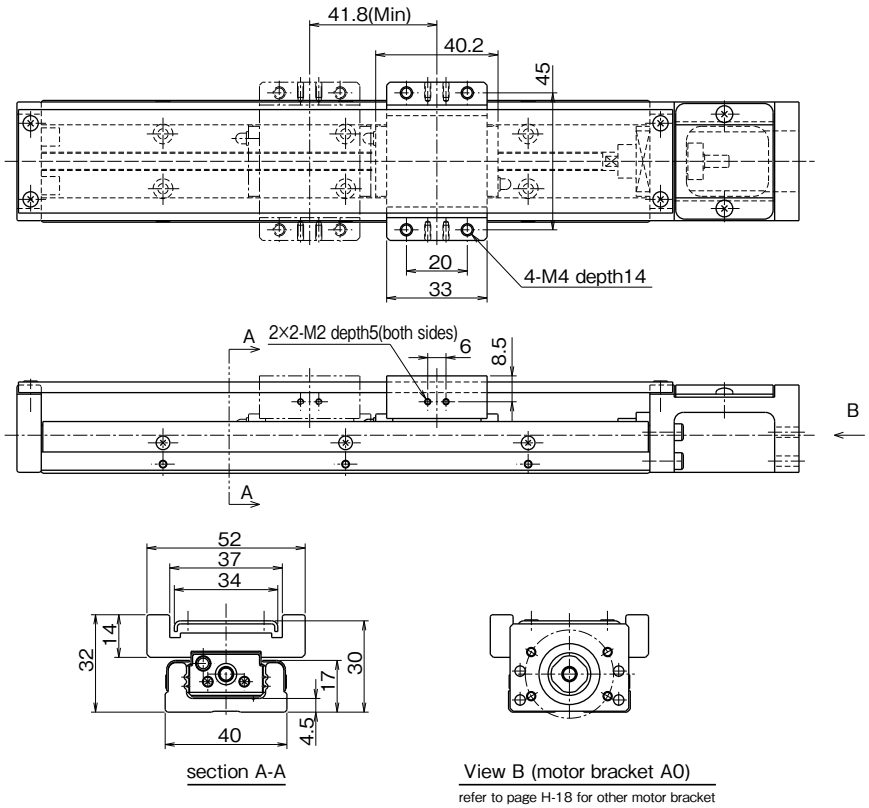

dimensions						stroke limit	
L_1	L_2	N_1	$M_1 \times P_1$	N_2	$M_2 \times P_2$	BG20A	BG20B
100	157	20	1×60	20	1×60	43	—
150	207	15	2×60	15	2×60	93	51
200	257	40		40		143	101

Stroke limit is a drive distance between both ends of the dampers.

www.bergab.ru Берг АБ bergab@ya.ru Тел. (495)-228-06-21, факс (495) 223-3071

www.bergab.ru Берг АБ bergab@ya.ru Тел. (495)-228-06-21, факс (495) 223-3071

BG26A, B

—Without Top Cover—

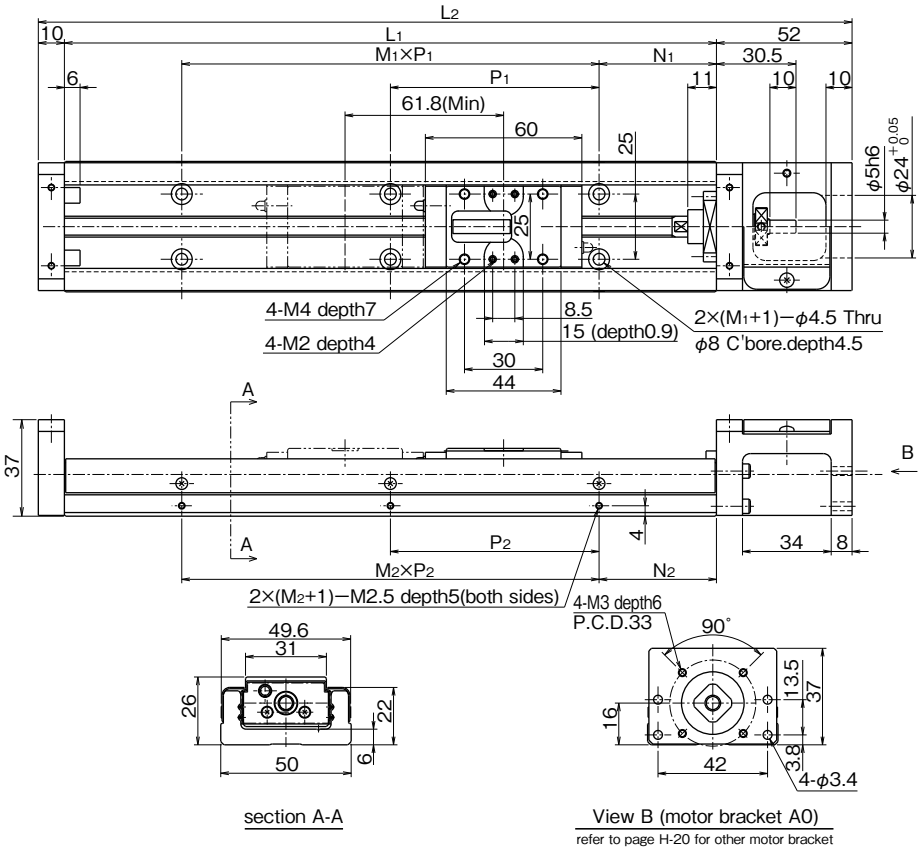

section A-A

View B (motor bracket A0)

refer to page H-20 for other motor bracket

—With Top Cover—

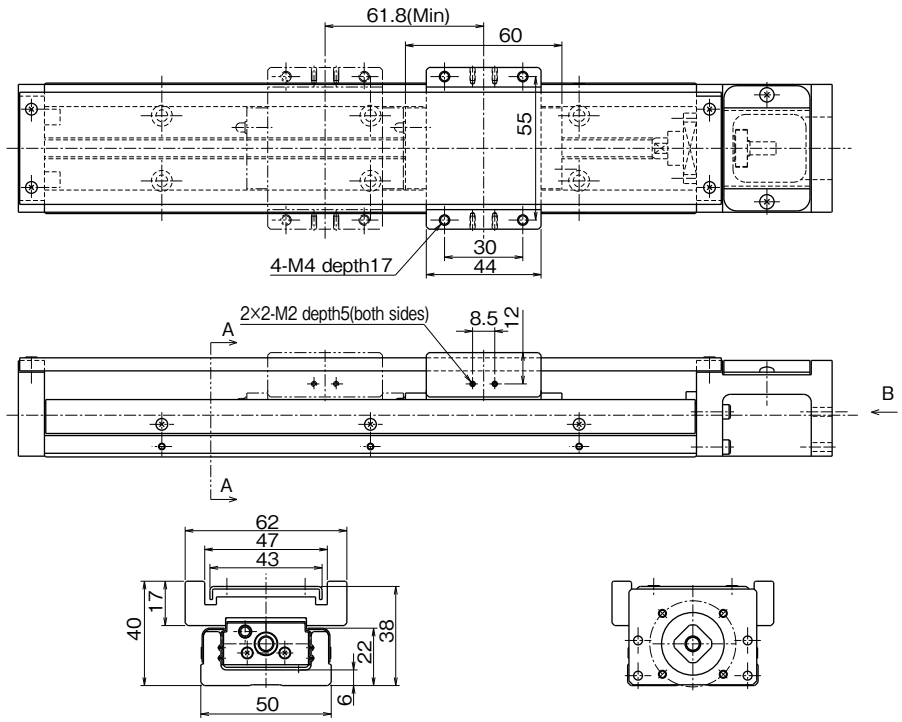

section A-A

View B (motor bracket A0)

refer to page H-20 for other motor bracket

dimensions						stroke limit	
L_1	L_2	N_1	$M_1 \times P_1$	N_2	$M_2 \times P_2$	BG26A	BG26B
150	212	35	1×80	35	1×80	73	—
200	262	20	2×80	20	2×80	123	61
250	312	45		45		173	111
300	362	30	3×80	30	3×80	223	161

Stroke limit is a drive distance between both ends of the dampers.

www.bergab.ru Берг АБ bergab@ya.ru Тел. (495)-228-06-21, факс (495) 223-3071

www.bergab.ru Берг АБ bergab@ya.ru Тел. (495)-228-06-21, факс (495) 223-3071

BG33A, B

—Without Top Cover—

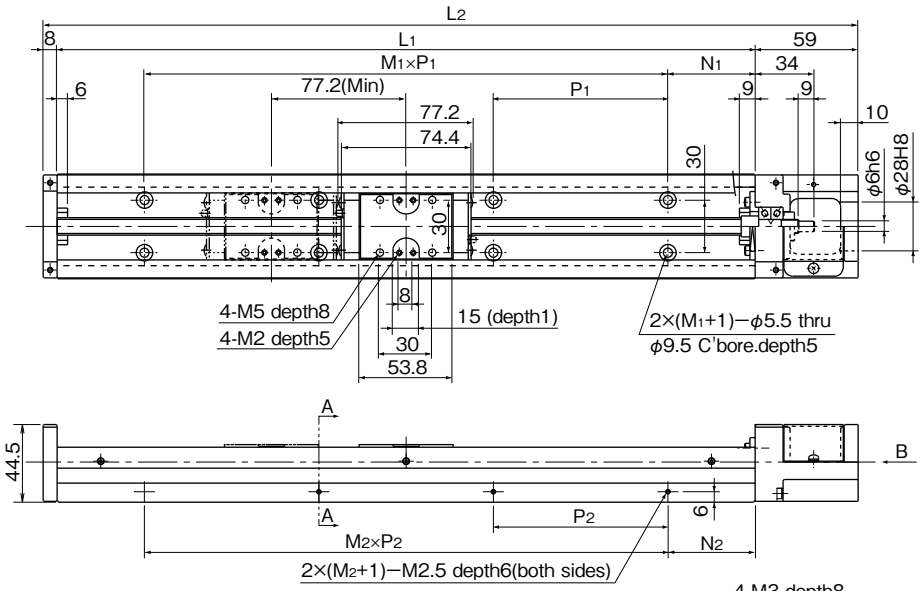

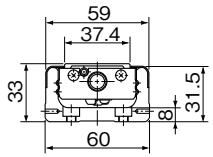

section A-A

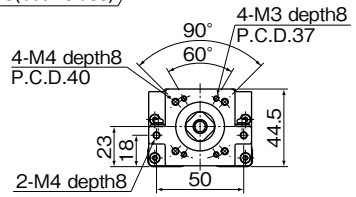

View B (motor bracket A0)

refer to page H-22 for other motor bracket

—With Top Cover—

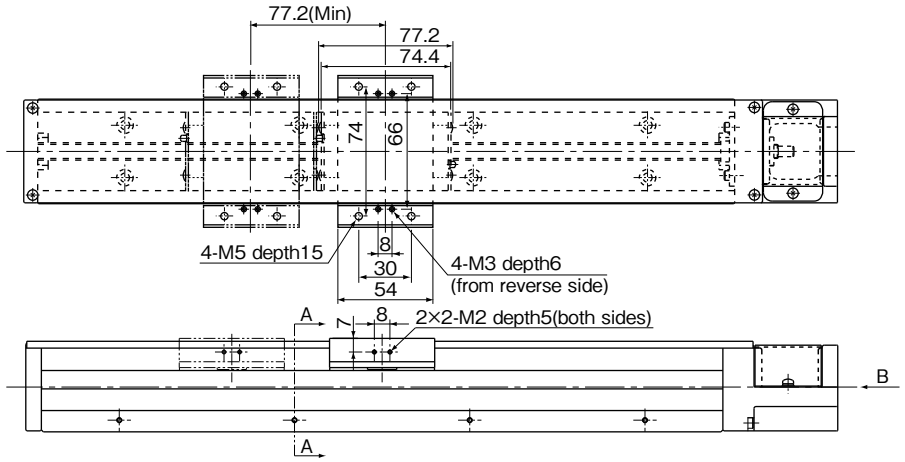

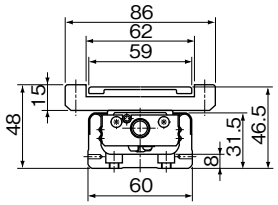

section A-A

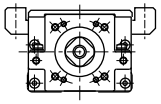

View B (motor bracket A0)

refer to Page H-22 for other motor bracket

dimensions						stroke limit	
L_1	L_2	N_1	$M_1 \times P_1$	N_2	$M_2 \times P_2$	BG33A	BG33B
150	217	25	1×100	25	1×100	60	—
200	267	50		50		110	—
300	367		2×100		2×100	210	133
400	467		3×100		3×100	310	233
500	567		4×100		4×100	410	333
600	667		5×100		5×100	510	433

Stroke limit is a drive distance between both ends of the dampers.

www.bergab.ru Берг АБ bergab@ya.ru Тел. (495)-228-06-21, факс (495) 223-3071

www.bergab.ru Берг АБ bergab@ya.ru Тел. (495)-228-06-21, факс (495) 223-3071

BG33C, D

—Without Top Cover—

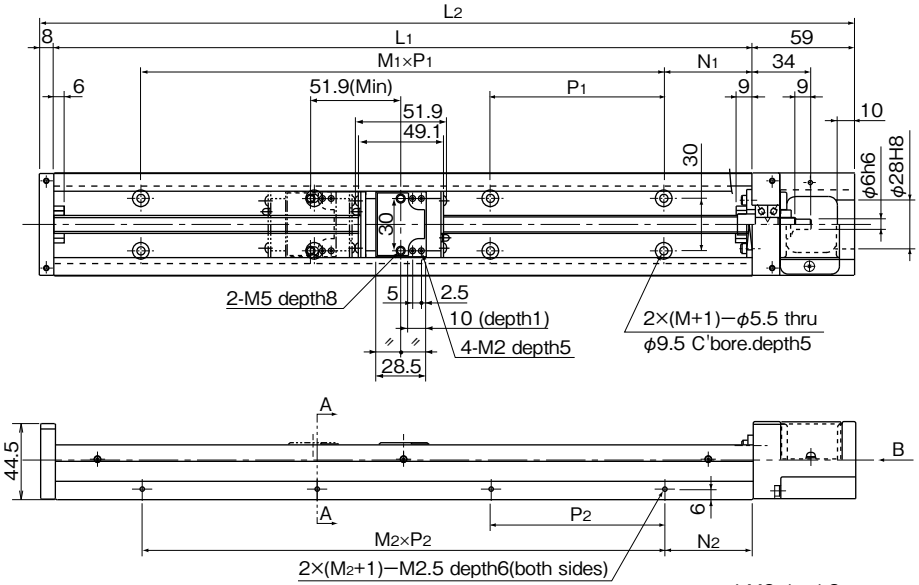

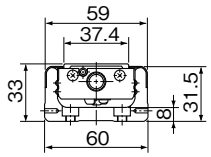

section A-A

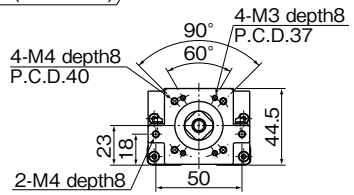

View B (motor bracket A0)

refer to page H-22 for other motor bracket

—With Top Cover—

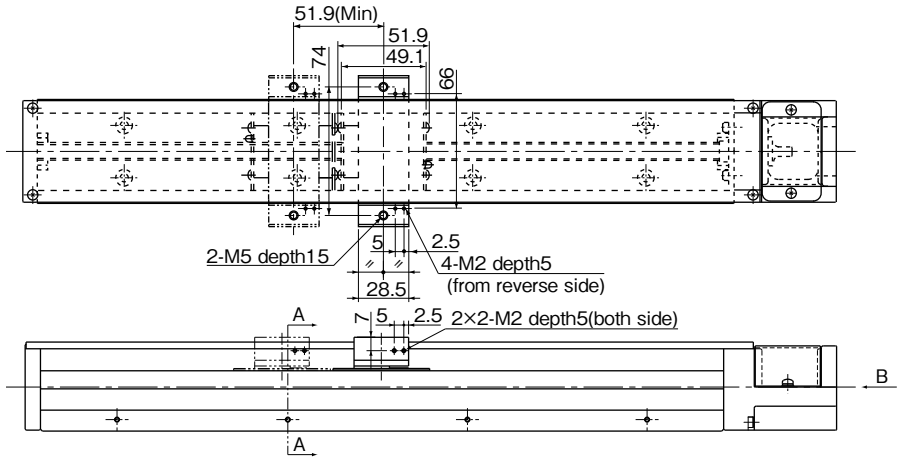

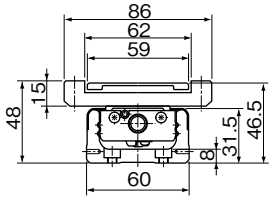

section A-A

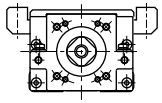

View B (motor bracket A0)

refer to page H-22 for other motor bracket

dimensions						stroke limit	
L_1	L_2	N_1	$M_1 \times P_1$	N_2	$M_2 \times P_2$	BG33C	BG33D
150	217	25	1×100	25	1×100	85	34
200	267	50		50		135	84
300	367		2×100		2×100	235	184
400	467		3×100		3×100	335	284
500	567		4×100		4×100	435	384
600	667		5×100		5×100	535	484

Stroke limit is a drive distance between both ends of the dampers.

www.bergab.ru Берг АБ bergab@ya.ru Тел. (495)-228-06-21, факс (495) 223-3071

www.bergab.ru Берг АБ bergab@ya.ru Тел. (495)-228-06-21, факс (495) 223-3071

BG46A, B

—Without Top Cover—

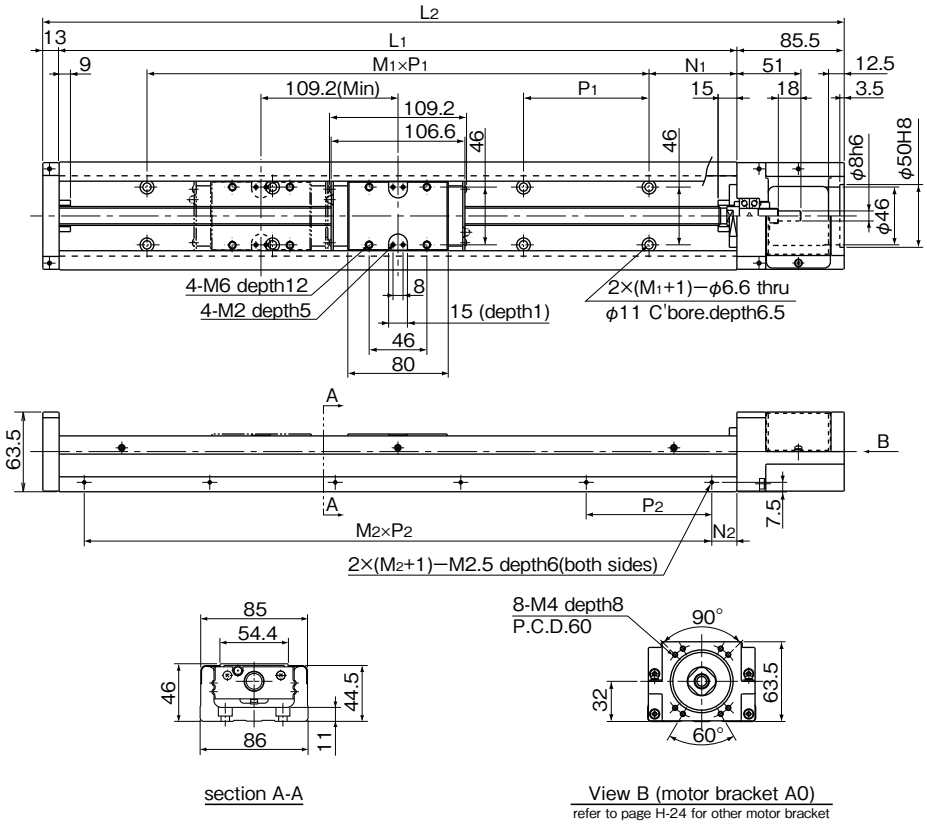

section A-A

View B (motor bracket A0)
refer to page H-24 for other motor bracket

—With Top Cover—

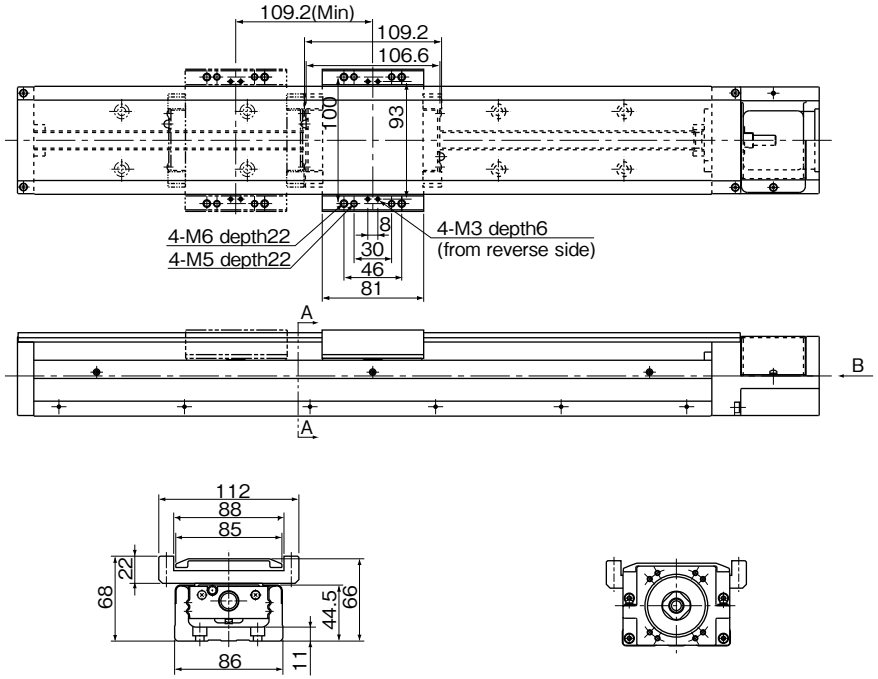

section A-A

View B (motor bracket A0)
refer to page H-24 for other motor bracket

dimensions						stroke limit	
L_1	L_2	N_1	$M_1 \times P_1$	N_2	$M_2 \times P_2$	BG46A	BG46B
340	438.5	70	2×100	20	3×100	209	100
440	538.5		3×100		4×100	309	200
540	638.5		4×100		5×100	409	300
640	738.5		5×100		6×100	509	400
740	838.5		6×100		7×100	609	500
840	938.5		7×100		8×100	709	600
940	1,038.5		8×100		9×100	809	700
1,040	1,138.5		9×100		10×100	909	800
1,140	1,238.5		10×100		11×100	1,009	900
1,240	1,338.5		11×100		12×100	1,109	1,000

Stroke limit is a drive distance between both ends of the dampers.

www.bergab.ru Берг АБ bergab@ya.ru Тел. (495)-228-06-21, факс (495) 223-3071

www.bergab.ru Берг АБ bergab@ya.ru Тел. (495)-228-06-21, факс (495) 223-3071

BG46C, D

—Without Top Cover—

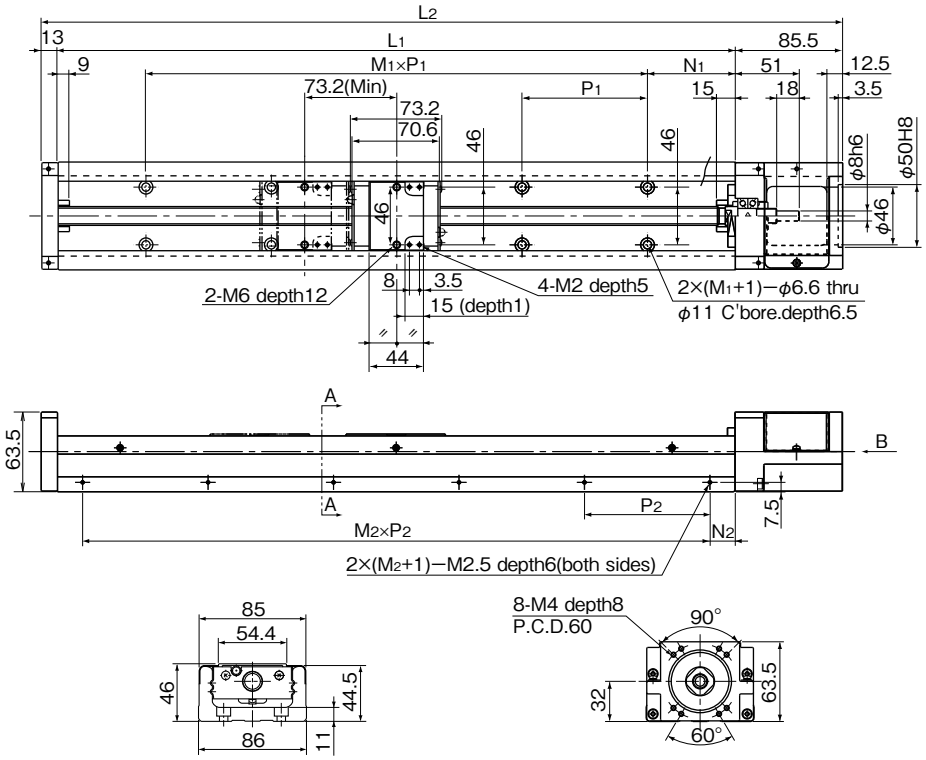

section A-A

View B (motor bracket A0)
refer to page H-24 for other motor bracket

—With Top Cover—

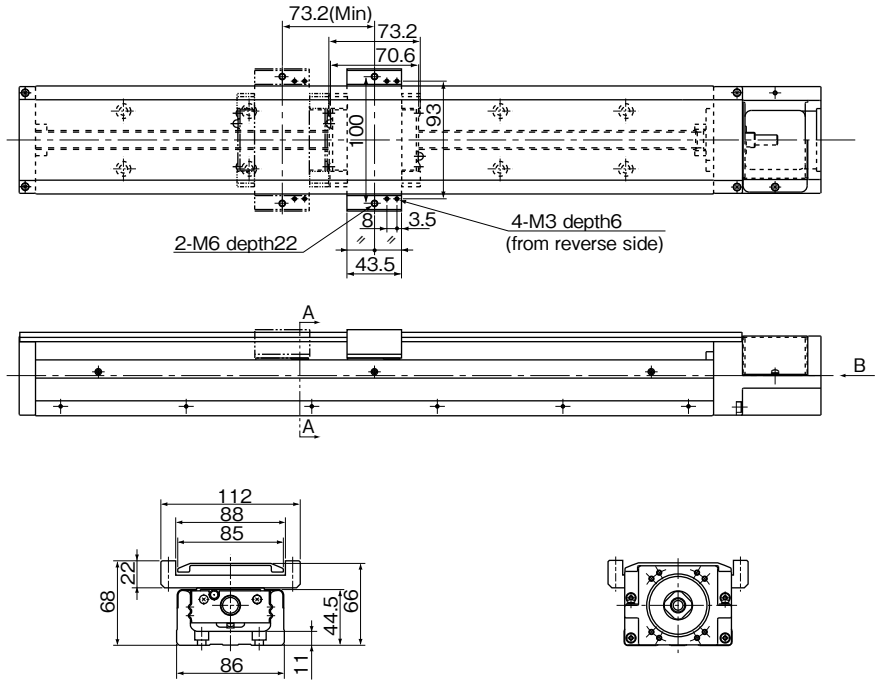

section A-A

View B (motor bracket A0)
refer to page H-24 for other motor bracket

dimensions						stroke limit	
L_1	L_2	N_1	$M_1 \times P_1$	N_2	$M_2 \times P_2$	BG46C	BG46D
340	438.5	70	2×100	20	3×100	245	172
440	538.5		3×100		4×100	345	272
540	638.5		4×100		5×100	445	372
640	738.5		5×100		6×100	545	472
740	838.5		6×100		7×100	645	572
840	938.5		7×100		8×100	745	672
940	1,038.5		8×100		9×100	845	772
1,040	1,138.5		9×100		10×100	945	872
1,140	1,238.5		10×100		11×100	1,045	972
1,240	1,338.5		11×100		12×100	1,145	1,072

Stroke limit is a drive distance between both ends of the dampers.

www.bergab.ru Берг АБ bergab@ya.ru Тел. (495)-228-06-21, факс (495) 223-3071

www.bergab.ru Берг АБ bergab@ya.ru Тел. (495)-228-06-21, факс (495) 223-3071

BG55A, B

—Without Top Cover—

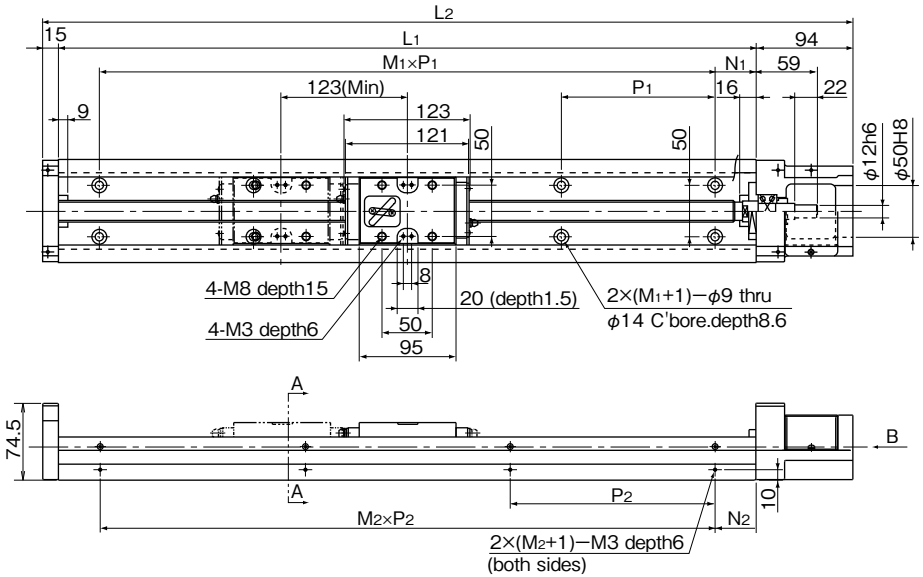

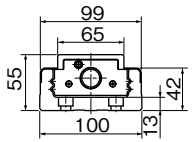

section A-A

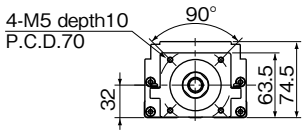

View B (motor bracket A0)

refer to page H-26 for other motor bracket

—With Top Cover—

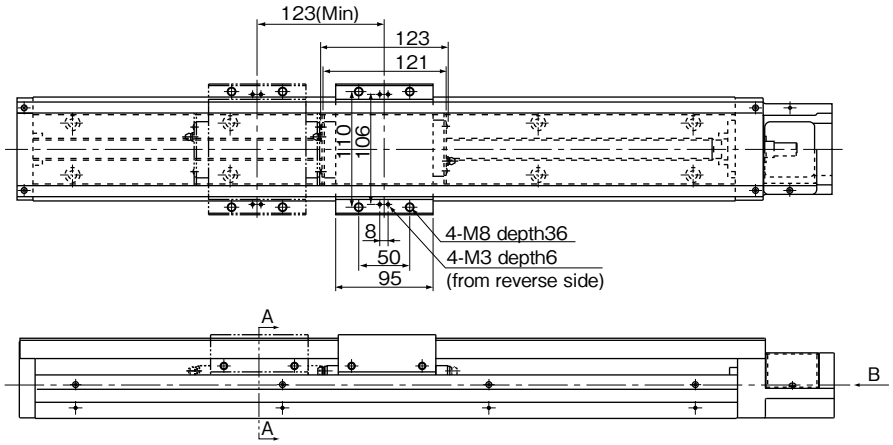

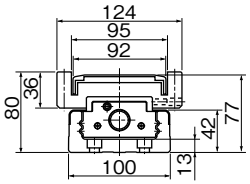

section A-A

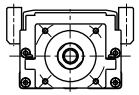

View B (motor bracket A0)

refer to page H-26 for other motor bracket

dimensions						stroke limit	
L_1	L_2	N_1	$M_1 \times P_1$	N_2	$M_2 \times P_2$	BG55A	BG55B
980	1,089	40	6×150	90	4×200	834	711
1,080	1,189	15	7×150	40	5×200	934	811
1,180	1,289	65		90		1,034	911
1,280	1,389	40	8×150	40	6×200	1,134	1,011
1,380	1,489	15	9×150	90		1,234	1,111

Stroke limit is a drive distance between both ends of the dampers.

www.bergab.ru Берг АБ bergab@ya.ru Тел. (495)-228-06-21, факс (495) 223-3071

SLIDE SCREW

www.bergab.ru Берг АБ bergab@ya.ru Тел. (495)-228-06-21, факс (495) 223-3071

SLIDE SCREW

The NB slide screw converts rotational motion into linear motion by utilizing the friction between radial ball bearings and a shaft. This simple mechanism eases maintenance and installation work. The slide screw is most commonly used as transport devices in many types of machines, and is not intended for accurate positioning requirements.

STRUCTURE AND ADVANTAGES

The NB slide screw consists of two aluminum blocks, each with three radial bearings with a fixed angle between them. A round shaft is inserted between the two blocks, and its rotation produces linear motion determined by the contact angle between the shaft and the bearings. For variable loads, the thrust is adjusted by turning the spring loaded thrust adjustment bolts.

Linear Motion on Round-shaft

The NB slide screw is suitable for long-stroke applications using a standard linear shaft.

High Machine Efficiency

The slide screw utilizes the rotational motion of the bearings and shaft to achieve machine efficiency as high as 90%.

No Lubrication Required

The bearings are pre-lubricated with grease prior to shipment, so there is no need to apply lubrication other than to the drive shaft to prevent corrosion.

Excessive Load Prevention Mechanism

When an excessive load is applied, the screw will stop due to slippage, thereby preventing accidents.

Figure I-1 Structure of NB Slide Screw

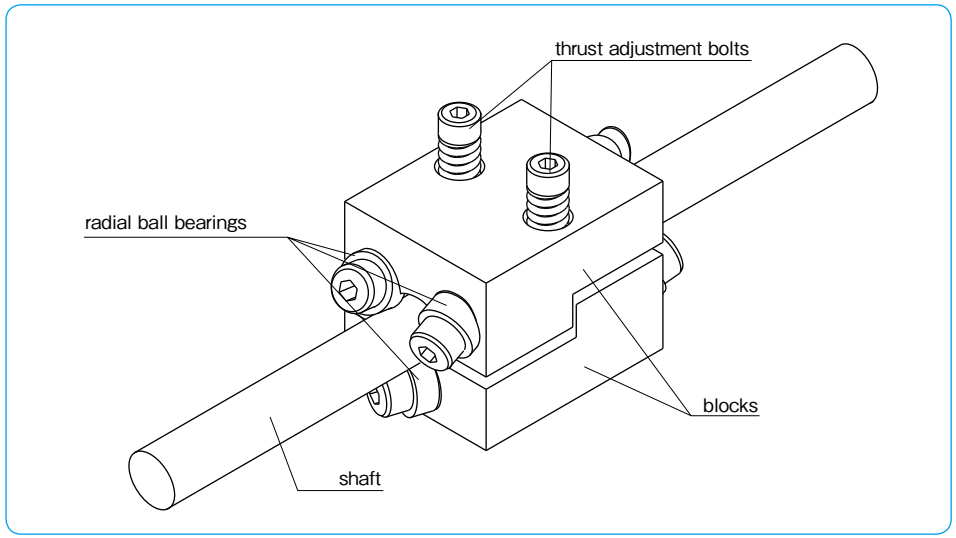

SELECTION METHOD

Required Thrust

Tightening of the bolts creates a thrust force by pushing the bearings against the shaft. This results in a constant force being applied to the bearings regardless of the load.
The thrust should not be greater than required force in the application.
For the horizontal application, the frictional resistance is calculated by the following equation.

$$F_1 = \mu \cdot g \cdot W \quad \cdots\cdots (1)$$

F_1: frictional resistance (N) μ: friction coefficient
W: mass of work (kg)
g: gravitational acceleration (9.8 m/sec^2)

A sufficient safety margin should be achieved by setting μ = 0.01. Also, the inertia at starting and stopping should be taken into consideration.

$$F_2 = W \frac{dv}{dt} \quad \cdots\cdots (2)$$

F_2: inertia (N) W: mass of work (kg)
dv/dt: acceleration (9.8m/sec^2)

Therefore, the required thrust is its maximum at starting point due to the combination of frictional resistance and inertia.

$$F = F_1 + F_2 \quad \cdots\cdots (3)$$

F: thrust (N) F_1: frictional resistance (N) F_2: inertia (N)

Rated Life

The rated life is expressed in terms of the number of revolutions of the drive shaft by Equation (4). The corresponding total travel distance and life time are given in Equations (5) and (6) respectively.

Rated life

$$L = \left(\frac{C}{F}\right)^3 10^6 \quad \cdots\cdots (4)$$

Total travel distance

$$L_s = \frac{L \cdot \ell}{10^6} \quad \cdots\cdots (5)$$

Life time

$$L_h = \frac{L}{60 \cdot n} \quad \cdots\cdots (6)$$

L: rated life (rev) C: basic dynamic load rating (N)
F: thrust (N) Ls: travel life (km) ℓ: lead (mm)
L_h: life time (hr) n: revolutions per min (rpm)

Table I-1 Basic Dynamic Load Rating

part number	basic dynamic load rating (N)
SS 6	98
SS 8	294
SS10	441
SS12	588
SS13	588
SS16	784
SS20	1,080
SS25	1,470
SS30	2,160

www.bergab.ru Берг АБ bergab@ya.ru Тел. (495)-228-06-21, факс (495) 223-3071

www.bergab.ru Берг АБ bergab@ya.ru Тел. (495)-228-06-21, факс (495) 223-3071

Allowable Rotational Speed

When the rotational speed is increased and approaches the shaft resonant frequency, the shaft is disabled from further operation. This speed is called the critical speed and can be obtained by the following equation. In order to leave a sufficient safety margin, the maximum operating speed should be set at about 80% of the calculated value.

$$N_C = \frac{60\lambda^2}{2\pi L^2} \cdot \sqrt{\frac{EI \times 10^3}{\gamma A}} \quad \cdots\cdots\cdots\cdots\cdots\cdots (7)$$

Nc: critical speed (rpm)
E: modulus of direct elasticity (N/mm²)
γ: density (kg/mm³)
λ: installation coefficient (refer to Figure I-3)
L: support distance (mm)
I: geometrical moment of inertia (mm⁴)
A: cross-sectional area of the shaft (mm²)

If modulus of direct elasticity is 2.06×10^5N/mm² and density is 7.85×10^{-6}kg/mm³, the critical speed for a solid shaft is:

$$N_C = 12.2 \cdot \frac{\lambda^2}{L^2} D \times 10^6 \quad \cdots\cdots\cdots\cdots\cdots\cdots (8)$$

Nc: critical speed (rpm)
λ: installation coefficient (refer to Figure I-3)
L: support distance (mm) D: shaft diameter (mm)

Figure I-2 Critical Speed and Support Distance

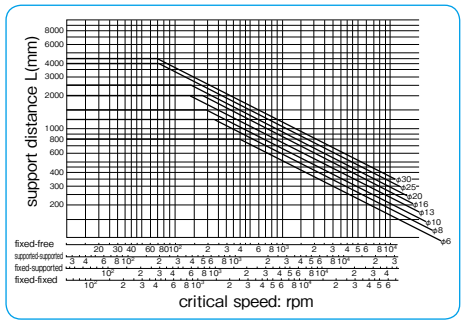

Figure I-3 Mounting of Slide Screw

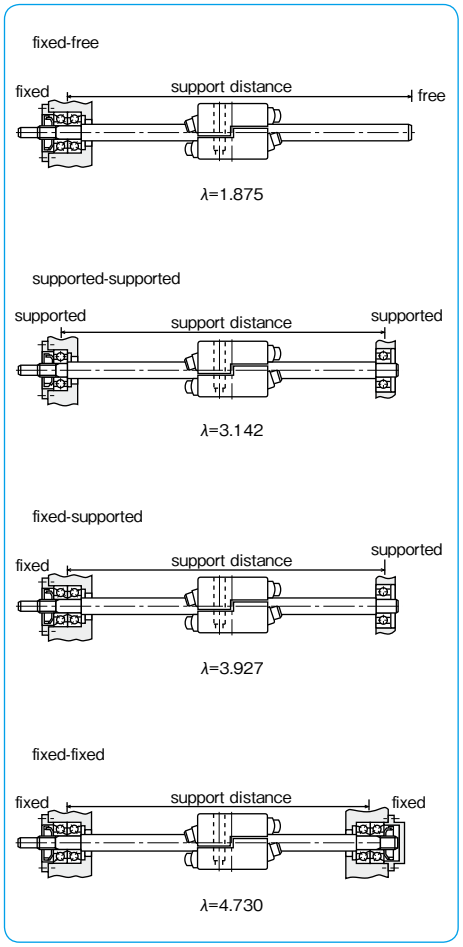

Calculation Example

1. Selecting a slide screw that satisfies the following conditions:

Support method: fixed-supported
Support distance: 1,500 mm
External force: 98 N
Table mass: 50 kg
Stroke distance: 1,200 mm
Friction coefficient: 0.01
Maximum speed of transfer: 12 m/min
Cycles per minute: 4

● Determination of required thrust:
F=98+(0.01×50×9.8) =102.9 N
Therefore, based on the maximum thrust in the dimension table, at least SS10 is required in size.

● Allowable rotational speed:
From Equation (8), according to the conditions, the critical speed Nc is.

$$N_C = 12.2 \cdot \frac{\lambda^2}{L^2} \cdot D \times 10^6 \quad \left[\begin{array}{l}\lambda=3.927\\ L=1500\text{mm}\end{array}\right]$$
$$=83.6D \text{ rev}$$

Applying a safety factor of 0.8, the maximum speed is given by:

$$V_{max} = \frac{0.8 \cdot N_C \cdot \ell}{1000} \text{m/min}$$

(ℓ: lead mm)
The following table summarizes the results of the calculations above for SS10 to SS16.

Table I-2 Maximum Speed

part number	shaft diameter D mm	lead ℓ mm	critical speed Nc rpm	maximum speed Vmax m/min
SS10-10	10	10	836	6.68
SS10-15		15		10.0
SS13-13	13	13	1,086	11.2
SS13-15		15		13.0
SS16-16	16	16	1,337	17.1

Therefore, the SS13-15 and SS16-16 slide screws satisfy the given conditions.

● Life Calculation
The life for the SS13-15 slide screw is calculated as follows. The rated life is obtained using Equation (4).

$$L = \left[\frac{C}{F}\right]^3 10^6 = 186\times10^6 \text{rev}$$

The average number of rotations that satisfies the conditions is:

$$n = \frac{1{,}200\times2\times4}{15} = 640\text{rev}$$

The life in terms of time is:

$$L_h = \frac{L}{60\times n} = 4{,}840\,(\text{h})$$

For the SS16-16 slide screw:
$L=4.40\times10^6$rev
n=600rev
L_h=12,200(h)

2. Determining the maximum speed of transfer under the following conditions:

Support method: fixed-supported
Support distance: 2,000mm
Slide screw selected: SS16-16
The critical speed is obtained from Equation (8):

$$N_C = 12.2 \cdot \frac{\lambda^2}{L^2} \cdot D \times 10^6 \quad \left[\begin{array}{l}\lambda=3.927\\ L=2000\text{mm}\\ D=16\text{mm}\end{array}\right]$$
$$=752\text{rpm}$$

Applying a safety factor of 0.8, the maximum speed of transfer is:

$$V_{max} = \frac{0.8 \cdot N_C \cdot \ell}{1000} \text{m/min} \ (\ell\text{: lead mm})$$
$$=9.6\text{m/min}$$

www.bergab.ru Берг АБ bergab@ya.ru Тел. (495)-228-06-21, факс (495) 223-3071

www.bergab.ru Берг АБ bergab@ya.ru Тел. (495)-228-06-21, факс (495) 223-3071

INSTALLATION

1. Clean dust from drive shaft.
2. Place shaft between upper and lower blocks. Lightly tighten thrust adjustment bolts until the clearance between the shaft and the bearings diminishes.
3. Temporarily attach the slide screw to the table.
4. Adjust the parallelism between the slide screw and the linear motion guides by manually moving the table back and forth. Fix the shaft accurately after the required parallelism is achieved.
5. Tighten the thrust adjustment bolts evenly while appling a thrust force to the table untill slippage disappears. Care should be required to avoid excessive tightening which results in shortening the rated life.

USE AND HANDLING PRECAUTIONS

- It is recommended to use a heat-treated ground shaft such as NB shaft to prevent wear and obtain smooth motion. (refer to page F-1)
- Since the slide screw utilizes the friction between the bearings and the shaft, the lead varies due to the effect of load variation, movement direction, and shaft conditions. Highly accurate positioning can be obtained by attaching a linear scale to the table.
- If the slide screw and linear motion guides are not parallel, an unbalanced load will be applied to the slide screw. Exercise care in controlling the parallelism.
- The slide screw slips on the shaft, if an excessive load is applied, in order to prevent damage. However, frequent slippage should be avoided in order not to shorten the travel life.
- Please transfer the radial load to linear motion guides since the radial load on the slide screw shortens the rated life. For long stroke applications, it is recommended to use linear and rotary motion components such as Slide Rotary Bush (refer to page E-8) along with a slide screw.

SPECIAL REQUIREMENTS

NB can fabricate slide screws to meet special requirements, including screws with a special lead or a reverse lead. Contact NB for further information.

SS TYPE

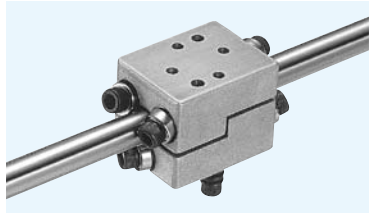

part number structure

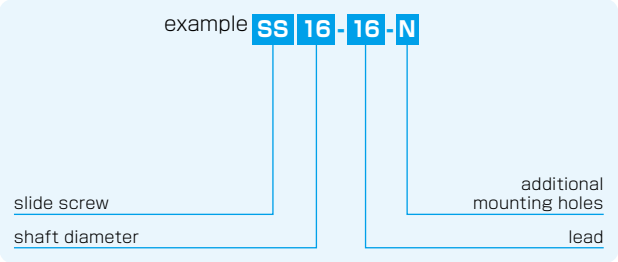

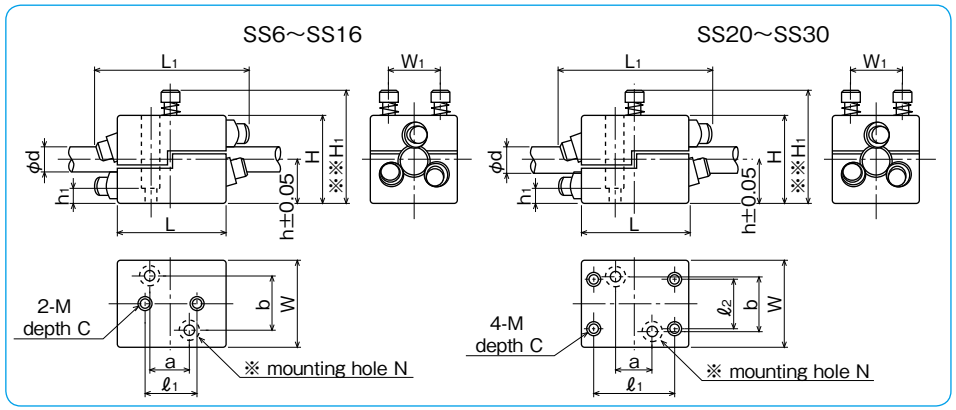

part number	shaft diameter d	major dimensions H	W	L	h	H1	L1	W1	ℓ1	ℓ2	a	b	M	C	N	h1	standard lead	maximum thrust	maximum tightening torque	mass
	mm	mm	mm	mm	mm	mm	mm	mm	mm	mm	mm	mm		mm		mm	mm	N	N·m	kg
SS 6	6	20.5	20	25	10	28	36	12	10	—	—	—	M3	6.5	—	—	6, 9	24.5	0.03	0.03
SS 8	8	28.5	28	40	14	40	56	18	18	—	—	—	M4	9	—	—	8,12	73.5	0.14	0.09
SS10	10	36.5	36	46	18	51	62	24	20	—	20	24	M4	12	M4	8	10,15	118	0.25	0.17
SS12	12	40.5	40	50	20	54	72	25	25	—	20	25	M5	12.5	M4	10	12,18	147	0.31	0.22
SS13	13	40.5	40	50	20	54	72	25	25	—	20	25	M5	12.5	M4	10	13,15	147	0.31	0.22
SS16	16	50.5	50	60	25	62	86	32	30	—	25	32	M5	16	M5	10	16,24	196	0.41	0.39
SS20	20	60.5	60	70	30	71	97	40	50	40	30	40	M6	12	M6	10	20,30	265	0.56	0.57
SS25	25	76.5	76	80	38	82	110	50	60	50	32	50	M8	12	M8	15	25	392	1.1	1.05
SS30	30	89	90	88	44	92	127	60	60	70	36	60	M8	15	M8	15	30,45	539	1.4	1.65

※ The mounting holes are machined on request.
※※ H_1 is the minimum height when the maximum thrust is applied.

1N≒0.102kgf 1N·m≒0.102kgf·m

www.bergab.ru Берг АБ bergab@ya.ru Тел. (495)-228-06-21, факс (495) 223-3071

www.bergab.ru Берг АБ bergab@ya.ru Тел. (495)-228-06-21, факс (495) 223-3071

INSTALLATION

1. Clean dust from drive shaft.
2. Place shaft between upper and lower blocks. Lightly tighten thrust adjustment bolts until the clearance between the shaft and the bearings diminishes.
3. Temporarily attach the slide screw to the table.
4. Adjust the parallelism between the slide screw and the linear motion guides by manually moving the table back and forth. Fix the shaft accurately after the required parallelism is achieved.
5. Tighten the thrust adjustment bolts evenly while appling a thrust force to the table untill slippage disappears. Care should be required to avoid excessive tightening which results in shortening the rated life.

USE AND HANDLING PRECAUTIONS

- It is recommended to use a heat-treated ground shaft such as NB shaft to prevent wear and obtain smooth motion. (refer to page F-1)
- Since the slide screw utilizes the friction between the bearings and the shaft, the lead varies due to the effect of load variation, movement direction, and shaft conditions. Highly accurate positioning can be obtained by attaching a linear scale to the table.
- If the slide screw and linear motion guides are not parallel, an unbalanced load will be applied to the slide screw. Exercise care in controlling the parallelism.
- The slide screw slips on the shaft, if an excessive load is applied, in order to prevent damage. However, frequent slippage should be avoided in order not to shorten the travel life.
- Please transfer the radial load to linear motion guides since the radial load on the slide screw shortens the rated life. For long stroke applications, it is recommended to use linear and rotary motion components such as Slide Rotary Bush (refer to page E-8) along with a slide screw.

SPECIAL REQUIREMENTS

NB can fabricate slide screws to meet special requirements, including screws with a special lead or a reverse lead. Contact NB for further information.

SS TYPE

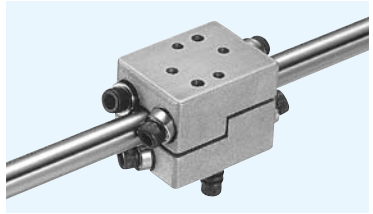

part number structure

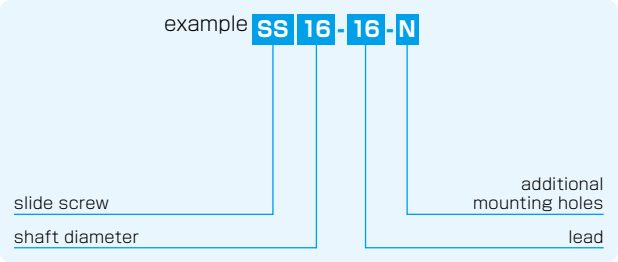

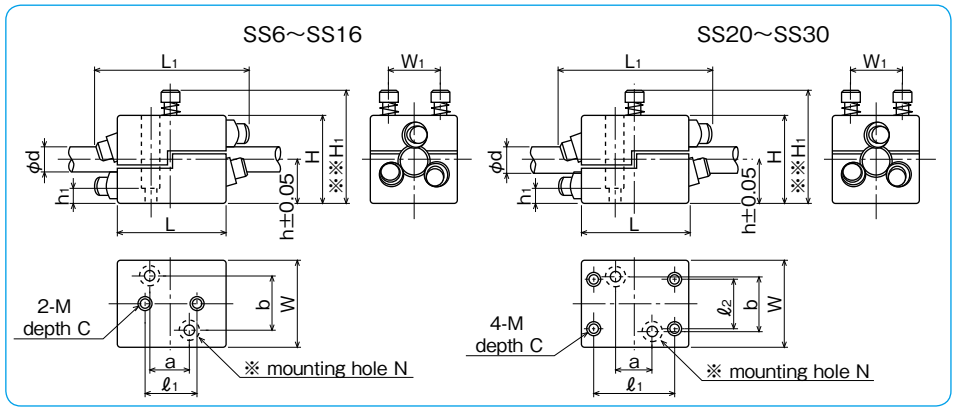

part number	shaft diameter d	major dimensions H	W	L	h	H1	L1	W1	ℓ1	ℓ2	a	b	M	C	N	h1	standard lead	maximum thrust	maximum tightening torque	mass
	mm	mm	mm	mm	mm	mm	mm	mm	mm	mm	mm	mm		mm		mm	mm	N	N·m	kg
SS 6	6	20.5	20	25	10	28	36	12	10	—	—	—	M3	6.5	—	—	6, 9	24.5	0.03	0.03
SS 8	8	28.5	28	40	14	40	56	18	18	—	—	—	M4	9	—	—	8,12	73.5	0.14	0.09
SS10	10	36.5	36	46	18	51	62	24	20	—	20	24	M4	12	M4	8	10,15	118	0.25	0.17
SS12	12	40.5	40	50	20	54	72	25	25	—	20	25	M5	12.5	M4	10	12,18	147	0.31	0.22
SS13	13	40.5	40	50	20	54	72	25	25	—	20	25	M5	12.5	M4	10	13,15	147	0.31	0.22
SS16	16	50.5	50	60	25	62	86	32	30	—	25	32	M5	16	M5	10	16,24	196	0.41	0.39
SS20	20	60.5	60	70	30	71	97	40	50	40	30	40	M6	12	M6	10	20,30	265	0.56	0.57
SS25	25	76.5	76	80	38	82	110	50	60	50	32	50	M8	12	M8	15	25	392	1.1	1.05
SS30	30	89	90	88	44	92	127	60	60	70	36	60	M8	15	M8	15	30,45	539	1.4	1.65

※ The mounting holes are machined on request.
※※ H_1 is the minimum height when the maximum thrust is applied.

1N≒0.102kgf 1N·m≒0.102kgf·m

www.bergab.ru Берг АБ bergab@ya.ru Тел. (495)-228-06-21, факс (495) 223-3071

www.bergab.ru Берг АБ bergab@ya.ru Тел. (495)-228-06-21, факс (495) 223-3071

INDEX

A

AK · Slide Bush: Compact Block Type · C-132
AK-G · Slide Bush: Compact Block Type · C-132
AK-GW · Slide Bush: Double-Wide Compact Block Type · C-134
AK-R · Slide Rotary Bush: Compact Block Type · E- 18
AK-RW · Slide Rotary Bush: Double-Wide Compact Block Type · E- 19
AK-W · Slide Bush: Double-Wide Compact Block Type · C-134
AKS · Slide Bush: Compact Block Type, Anticorrosion · C-132
AKS-G · Slide Bush: Compact Block Type, Anticorrosion · C-132
AKS-GW · Slide Bush: Double-Wide Compact Block Type, Anticorrosion · C-134
AKS-W · Slide Bush: Double-Wide Compact Block Type, Anticorrosion · C-134

B

BG · Actuator: Integrated Guide and Ball Screw System · H- 1
BT · Slide Way: Special Mounting Screw · G- 9

C

CD · Slide Bush: Clearance Adjustable Type · C-152
CDS · Slide Bush: Clearance Adjustable Type, Anticorrosion · C-152
CE · Slide Bush: Non-Clearance Adjustable Type · C-150
CES · Slide Bush: Non-Clearance Adjustable Type, Anticorrosion · C-150
CR · Gonio Way: Curved Roller Cage · G- 64

F

F · Slide Guide: Special Cap · A- 15
FLM · Slide Bush: Felt Seal · C- 12
FP · Ball Spline: Lock Plate · B- 12

G

GL-E · Slide Guide: High Rigidity Flange Type (Short Configuration) · A- 72
GL-F · Slide Guide: High Rigidity Non-Flange Type (Short Configuration) · A- 66
GL-HTE · Slide Guide: High Rigidity Flange Type (Long Configuration) · A- 76
GL-HTF · Slide Guide: High Rigidity Non-Flange Type (Long Configuration) · A- 70
GL-TE · Slide Guide: High Rigidity Flange Type (Standard Configuration) · A- 74
GL-TF · Slide Guide: High Rigidity Non-Flange Type (Standard Configuration) · A- 68
GM · Slide Bush: Light Weight Single Type · C-112
GM-W · Slide Bush: Light Weight Double-Wide Type · C-113
GMF-W · Slide Bush: Light Weight Round Flange Double-Wide Type · C-114
GMF-W-E · Slide Bush: Round Flange Double-Wide Pilot End Type · C-120
GMK-W · Slide Bush: Light Weight Square Flange Double-Wide Type · C-116
GMK-W-E · Slide Bush: Square Flange Double-Wide Pilot End Type · C-122
GMT-W · Slide Bush: Light Weight Two Side Cut Double-Wide Flange Type · C-118
GMT-W-E · Slide Bush: Two Side Cut Double-Wide Flange Pilot End Type · C-124
GW · Slide Bush (Inch Standard): Light Weight Single Type · C-126

K

KB · Slide Bush (Euro Standard): Standard Type · C- 68
KB-AJ · Slide Bush (Euro Standard): Clearance Adjustable Type · C- 70
KB-G · Slide Bush (Euro Standard): Standard Type · C- 68
KB-G-AJ · Slide Bush (Euro Standard): Clearance Adjustable Type · C- 70
KB-G-OP · Slide Bush (Euro Standard): Open Type · C- 72
KB-GW · Slide Bush (Euro Standard): Double-Wide Type · C- 74
KB-OP · Slide Bush (Euro Standard): Open Type · C- 72
KB-W · Slide Bush (Euro Standard): Double-Wide Type · C- 74
KBF · Slide Bush (Euro Standard): Round Flange Type · C- 76
KBF-G · Slide Bush (Euro Standard): Round Flange Type · C- 76
KBF-GW · Slide Bush (Euro Standard): Round Flange Double-Wide Type · C- 82
KBF-W · Slide Bush (Euro Standard): Round Flange Double-Wide Type · C- 82
KBFC · Slide Bush (Euro Standard): Center Mount Round Flange Type · C- 86
KBFC-G · Slide Bush (Euro Standard): Center Mount Round Flange Type · C- 86
KBK · Slide Bush (Euro Standard): Square Flange Type · C- 78
KBK-G · Slide Bush (Euro Standard): Square Flange Type · C- 78
KBK-GW · Slide Bush (Euro Standard): Square Flange Double-Wide Type · C- 84
KBK-W · Slide Bush (Euro Standard): Square Flange Double-Wide Type · C- 84
KBKC · Slide Bush (Euro Standard): Center Mount Square Flange Type · C- 88
KBKC-G · Slide Bush (Euro Standard): Center Mount Square Flange Type · C- 88
KBS · Slide Bush (Euro Standard): Standard Type, Anticorrosion · C- 68
KBS-AJ · Slide Bush (Euro Standard): Clearance Adjustable Type, Anticorrosion · C- 70
KBS-G · Slide Bush (Euro Standard): Standard Type, Anticorrosion · C- 68
KBS-G-AJ · Slide Bush (Euro Standard): Clearance Adjustable Type, Anticorrosion · C- 70
KBS-G-OP · Slide Bush (Euro Standard): Open Type, Anticorrosion · C- 72
KBS-GW · Slide Bush (Euro Standard): Double-Wide Type, Anticorrosion · C- 74
KBS-OP · Slide Bush (Euro Standard): Open Type, Anticorrosion · C- 72
KBS-W · Slide Bush (Euro Standard): Double-Wide Type, Anticorrosion · C- 74
KBSF · Slide Bush (Euro Standard): Round Flange Type, Anticorrosion · C- 76
KBSF-G · Slide Bush (Euro Standard): Round Flange Type, Anticorrosion · C- 76
KBSF-GW · Slide Bush (Euro Standard): Round Flange Double-Wide Type, Anticorrosion · C- 82
KBSF-W · Slide Bush (Euro Standard): Round Flange Double-Wide Type, Anticorrosion · C- 82
KBSFC · Slide Bush (Euro Standard): Center Mount Round Flange Type, Anticorrosion · C- 86
KBSFC-G · Slide Bush (Euro Standard): Center Mount Round Flange Type, Anticorrosion · C- 86
KBSK · Slide Bush (Euro Standard): Square Flange Type, Anticorrosion · C- 78
KBSK-G · Slide Bush (Euro Standard): Square Flange Type, Anticorrosion · C- 78
KBSK-GW · Slide Bush (Euro Standard): Square Flange Double-Wide Type, Anticorrosion · C- 84
KBSK-W · Slide Bush (Euro Standard): Square Flange Double-Wide Type, Anticorrosion · C- 84
KBSKC · Slide Bush (Euro Standard): Center Mount Square Flange Type, Anticorrosion · C- 88
KBSKC-G · Slide Bush (Euro Standard): Center Mount Square Flange Type, Anticorrosion · C- 88
KBST · Slide Bush (Euro Standard): Two Side Cut Flange Type, Anticorrosion · C- 80
KBST-G · Slide Bush (Euro Standard): Two Side Cut Flange Type, Anticorrosion · C- 80
KBT · Slide Bush (Euro Standard): Two Side Cut Flange Type · C- 80

www.bergab.ru Берг АБ bergab@ya.ru Тел. (495)-228-06-21, факс (495) 223-3071

www.bergab.ru Берг АБ bergab@ya.ru Тел. (495)-228-06-21, факс (495) 223-3071

KBT-G · · · · · · Slide Bush (Euro Standard): Two Side Cut Flange Type · · · · · · · · · · · · C- 80
KGF-Grease · · Anti-fretting/Anti-corrosion · Eng- 41
KGL-Grease · · Low Dust-generation · Eng- 39
KGU-Grease · · Low Dust-generation · Eng- 39
K-Grease · · · · Low Dust-generation · Eng- 41

L

LP · · · · · · · · · Ball Spline: Lock Plate · B- 12
LWA · · · · · · · · Shaft (Inch Standard): Low Shaft Support Rail · · · · · · · · · · · · · · · · F- 23

N

NV · · · · · · · · · Slide Way: STUDROLLER System · G- 10
NVT · · · · · · · · Slide Table: STUDROLLER System · G- 28

R

R · · · · · · · · · · Slide Way: Roller Cage · G- 5
RA · · · · · · · · · Slide Way: Aluminum Roller Cage · G- 5
RAS · · · · · · · · Slide Way: Aluminum Roller Cage, Anticorrosion · · · · · · · · · · · · · · · G- 5
RB · · · · · · · · · Slide Bush: Resin Block Type · C-148
RBW · · · · · · · Slide Bush (Inch Standard): Resin Block Type · · · · · · · · · · · · · · · · · C-160
RK · · · · · · · · · Slide Rotary Bush · E- 23
RS · · · · · · · · · Slide Way: Roller Cage, Anticorrosion · G- 5
RV · · · · · · · · · Gonio Way · G- 62
RVF · · · · · · · · Gonio Way: Flat-installation-surface Type · · · · · · · · · · · · · · · · · · G- 60

SA

SA · · · · · · · · · Shaft: Shaft Support Rail · F- 18

SE

SEB-A · · · · · · Slide Guide: Miniature Type · A- 30
SEB-A-N · · · · · Slide Guide: Miniature Type with Tapped Hole Rail · · · · · · · · · · · · · · A- 30
SEB-AY · · · · · Slide Guide: Miniature Long Type · A- 30
SEB-AY-N · · · · Slide Guide: Miniature Long Type with Tapped Hole Rail · · · · · · · · · · · A- 30
SEB-WA · · · · · Slide Guide: Miniature Wide Type · A- 32
SEB-WA-N · · · · Slide Guide: Miniature Wide Type with Tapped Hole Rail · · · · · · · · · · · A- 32
SEB-WAY · · · · Slide Guide: Miniature Wide and Long Type · · · · · · · · · · · · · · · · · · A- 32
SEB-WAY-N · · · Slide Guide: Miniature Wide and Long Type with Tapped Hole Rail · · · · · A- 32
SEB-WD · · · · · Slide Guide: Miniature Wide Type · A- 32
SEB-WD-N · · · Slide Guide: Miniature Wide Type with Tapped Hole Rail · · · · · · · · · · · A- 32
SEBS-A · · · · · Slide Guide: Miniature Type, Anticorrosion · · · · · · · · · · · · · · · · · · A- 30
SEBS-A-N · · · · Slide Guide: Miniature Type with Tapped Hole Rail, Anticorrosion · · · · · · A- 30
SEBS-AY · · · · Slide Guide: Miniature Long Type, Anticorrosion · · · · · · · · · · · · · · · A- 30
SEBS-AY-N · · · Slide Guide: Miniature Long Type with Tapped Hole Rail, Anticorrosion · · A- 30
SEBS-B · · · · · Slide Guide (Retained Ball): Miniature Type · · · · · · · · · · · · · · · · · A- 26
SEBS-B-N · · · · Slide Guide (Retained Ball): Miniature Type with Tapped Hole Rail · · · · · A- 26
SEBS-BM · · · · Slide Guide (Retained Ball): Miniature All Stainless Type · · · · · · · · · · · A- 26
SEBS-BM-N · · · Slide Guide (Retained Ball): Miniature All Stainless Type with Tapped Hole Rail · · A- 26
SEBS-BY · · · · Slide Guide (Retained Ball): Miniature Long Type · · · · · · · · · · · · · · · A- 26
SEBS-BY-N · · · Slide Guide (Retained Ball): Miniature Long Type with Tapped Hole Rail · · A- 26
SEBS-BYM · · · Slide Guide (Retained Ball): Miniature All Stainless Long Type · · · · · · · A- 26
SEBS-BYM-N · · Slide Guide (Retained Ball): Miniature All Stainless Long Type with Tapped Hole Rail · · A- 26
SEBS-WA · · · · Slide Guide: Miniature Wide Type, Anticorrosion · · · · · · · · · · · · · · · A- 32
SEBS-WA-N · · · Slide Guide: Miniature Wide Type with Tapped Hole Rail, Anticorrosion · · A- 32
SEBS-WAY · · · Slide Guide: Miniature Wide and Long Type, Anticorrosion · · · · · · · · · · A- 32
SEBS-WAY-N · · Slide Guide: Miniature Wide and Long Type with Tapped Hole Rail, Anticorrosion · · A- 32
SEBS-WB · · · · Slide Guide (Retained Ball): Miniature Wide Type · · · · · · · · · · · · · · · A- 28
SEBS-WB-N · · · Slide Guide (Retained Ball): Miniature Wide Type with Tapped Hole Rail · · A- 28
SEBS-WBY · · · Slide Guide (Retained Ball): Miniature Wide and Long Type · · · · · · · · · A- 28
SEBS-WBY-N · · Slide Guide (Retained Ball): Miniature Wide and Long Type with Tapped Hole Rail, Anticorrosion · A- 28
SEBS-WD · · · · Slide Guide: Miniature Wide Type, Anticorrosion · · · · · · · · · · · · · · · A- 32
SEBS-WD-N · · Slide Guide: Miniature Wide Type with Tapped Hole Rail, Anticorrosion · · A- 32
SER-A · · · · · · Slide Guide (Roller Element): Miniature Type · · · · · · · · · · · · · · · · · A- 38
SER-A-N · · · · · Slide Guide (Roller Element): Miniature Type with Tapped Hole Rail · · · · · A- 38
SER-WA · · · · · Slide Guide (Roller Element): Miniature Wide Type · · · · · · · · · · · · · · A- 40
SER-WA-N · · · · Slide Guide (Roller Element): Miniature Wide Type with Tapped Hole Rail · A- 40
SERS-A · · · · · Slide Guide (Roller Element): Miniature Type, Anticorrosion · · · · · · · · · A- 38
SERS-A-N · · · · Slide Guide (Roller Element): Miniature Type with Tapped Hole Rail, Anticorrosion · A- 38
SERS-WA · · · · Slide Guide (Roller Element): Miniature Wide Type, Anticorrosion · · · · · · A- 40
SERS-WA-N · · · Slide Guide (Roller Element): Miniature Wide Type with Tapped Hole Rail, Anticorrosion · · A- 40

SG

SGL-E · · · · · · Slide Guide: High Rigidity Flange Type (Short Configuration) · · · · · · · · A- 56
SGL-F · · · · · · Slide Guide: High Rigidity Non-Flange Type (Short Configuration) · · · · · A- 48
SGL-HTE · · · · Slide Guide: High Rigidity Flange Type (Standard Configuration) · · · · · · A- 60
SGL-HTEX · · · Slide Guide: High Rigidity Flange Type (Standard Configuration) · · · · · · A- 64
SGL-HTF · · · · Slide Guide: High Rigidity Non-Flange Type (Standard Configuration) · · · A- 52
SGL-HYE · · · · Slide Guide: High Rigidity Flange Type (Long Configuration) · · · · · · · · A- 62
SGL-HYF · · · · Slide Guide: High Rigidity Non-Flange Type (Long Configuration) · · · · · · A- 54
SGL-TE · · · · · Slide Guide: High Rigidity Flange Type (Standard Configuration) · · · · · · A- 58
SGL-TF · · · · · Slide Guide: High Rigidity Non-Flange Type (Standard Configuration) · · · A- 50
SGLS-F · · · · · Slide Guide: High Rigidity Non-Flange Type (Short Configuration),Anticorrosion · A- 48
SGLS-TF · · · · Slide Guide: High Rigidity Non-Flange Type (Standard Configuration),Anticorrosion · A- 50
SGW-TE · · · · · Slide Guide: High Rigidity Wide Flange Type · · · · · · · · · · · · · · · · · A- 84
SGW-TF · · · · · Slide Guide: High Rigidity Wide Non-Flange Type · · · · · · · · · · · · · · · A- 82

SH

SH · · · · · · · · · Shaft: Shaft Supporter · F- 16
SH-A · · · · · · · Shaft: Aluminum Shaft Supporter · F- 15
SHF · · · · · · · · Shaft: Shaft Supporter Flange Type · F- 17
SHF-FC · · · · · Shaft: Shaft Supporter Flange Type Cast Iron · · · · · · · · · · · · · · · · · F- 17

www.bergab.ru Берг АБ bergab@ya.ru Тел. (495)-228-06-21, факс (495) 223-3071

www.bergab.ru Берг АБ bergab@ya.ru Тел. (495)-228-06-21, факс (495) 223-3071

SM

SM · · · · · · · · Slide Bush: Standard Type · C- 14
SM-AJ · · · · · · Slide Bush: Clearance Adjustable Type · C- 16
SM-G · · · · · · · Slide Bush: Standard Type · C- 14
SM-G-L · · · · · · Slide Bush: Long Type · C- 20
SM-G-AJ · · · · Slide Bush: Clearance Adjustable Type · C- 16
SM-G-OP · · · · Slide Bush: Open Type · C- 18
SM-GW · · · · · · Slide Bush: Double-Wide Type · C- 22
SM-OP · · · · · · Slide Bush: Open Type · C- 18
SM-W · · · · · · · Slide Bush: Double-Wide Type · C- 22
SMA · · · · · · · · Slide Bush: Block Type · C-128
SMA-G · · · · · · Slide Bush: Block Type · C-128
SMA-GW · · · · Slide Bush: Double-Wide Block Type · C-130
SMA-R · · · · · · Slide Rotary Bush: Block Type · E- 16
SMA-RW · · · · · Slide Rotary Bush: Double-Wide Block Type · · · · · · · · · · · · · · · · · · · E- 17
SMA-W · · · · · · Slide Bush: Double-Wide Block Type · C-130
SMB · · · · · · · · Slide Bush: Block Type · C-136
SMB-G · · · · · · Slide Bush: Block Type · C-136
SMD · · · · · · · · Slide Bush: Clearance Adjustable Open Block Type · · · · · · · · · · · · · · · C-146
SMD-G · · · · · · Slide Bush: Clearance Adjustable Open Block Type · · · · · · · · · · · · · · · C-146
SME · · · · · · · · Slide Bush: Open Block Type · C-142
SME-G · · · · · · Slide Bush: Open Block Type · C-142
SME-GW · · · · · Slide Bush: Double-Wide Open Block Type · C-144
SME-W · · · · · · Slide Bush: Double-Wide Open Block Type · C-144
SMF · · · · · · · · Slide Bush: Round Flange Type · C- 24
SMF-E · · · · · · Slide Bush: Round Flange Pilot End Type · C- 30
SMF-G · · · · · · Slide Bush: Round Flange Type · C- 24
SMF-G-E · · · · · Slide Bush: Round Flange Pilot End Type · C- 30
SMF-GW · · · · · Slide Bush: Round Flange Double-Wide Type · · · · · · · · · · · · · · · · · · · C- 38
SMF-GW-E · · · Slide Bush: Round Flange Double-Wide Pilot End Type · · · · · · · · · · · · · · C- 50
SMF-W · · · · · · Slide Bush: Round Flange Double-Wide Type · · · · · · · · · · · · · · · · · · · C- 38
SMF-W-E · · · · · Slide Bush: Round Flange Double-Wide Pilot End Type · · · · · · · · · · · · · · C- 50
SMFC · · · · · · · Slide Bush: Center Mount Round Flange Type · · · · · · · · · · · · · · · · · · · C- 44
SMFC-G · · · · · Slide Bush: Center Mount Round Flange Type · · · · · · · · · · · · · · · · · · · C- 44
SMJ · · · · · · · · Slide Bush: Clearance Adjustable Block Type · · · · · · · · · · · · · · · · · · C-140
SMJ-G · · · · · · Slide Bush: Clearance Adjustable Block Type · · · · · · · · · · · · · · · · · · C-140
SMK · · · · · · · · Slide Bush: Square Flange Type · C- 26
SMK-E · · · · · · Slide Bush: Square Flange Pilot End Type · C- 32
SMK-G · · · · · · Slide Bush: Square Flange Type · C- 26
SMK-G-E · · · · · Slide Bush: Square Flange Pilot End Type · C- 32
SMK-G-L · · · · · Slide Bush: Square Flange Long Type · C- 36
SMK-GW · · · · · Slide Bush: Square Flange Double-Wide Type · · · · · · · · · · · · · · · · · · · C- 40
SMK-GW-E · · · Slide Bush: Square Flange Double-Wide Pilot End Type · · · · · · · · · · · · · · C- 52
SMK-W · · · · · · Slide Bush: Square Flange Double-Wide Type · · · · · · · · · · · · · · · · · · · C- 40
SMK-W-E · · · · Slide Bush: Square Flange Double-Wide Pilot End Type · · · · · · · · · · · · · · C- 52
SMKC · · · · · · Slide Bush: Center Mount Square Flange Type · · · · · · · · · · · · · · · · · · · C- 46
SMKC-G · · · · · Slide Bush: Center Mount Square Flange Type · · · · · · · · · · · · · · · · · · · C- 46
SMP · · · · · · · · Slide Bush: Pillow Block Type · C-138
SMP-G · · · · · · Slide Bush: Pillow Block Type · C-138
SMP-R · · · · · · Slide Rotary Bush: Pillow Block Type · E- 20
SMS · · · · · · · · Slide Bush: Standard Type, Anticorrosion · C- 14
SMS-AJ · · · · · Slide Bush: Clearance Adjustable Type, Anticorrosion · · · · · · · · · · · · · · C- 16
SMS-G · · · · · · Slide Bush: Standard Type, Anticorrosion · C- 14
SMS-G-AJ · · · Slide Bush: Clearance Adjustable Type, Anticorrosion · · · · · · · · · · · · · · C- 16
SMS-G-OP · · · Slide Bush: Open Type, Anticorrosion · C- 18
SMS-GW · · · · · Slide Bush: Double-Wide Type, Anticorrosion · · · · · · · · · · · · · · · · · · · C- 22
SMS-OP · · · · · Slide Bush: Open Type, Anticorrosion · C- 18
SMS-W · · · · · · Slide Bush: Double-Wide Type, Anticorrosion · · · · · · · · · · · · · · · · · · · C- 22
SMSA · · · · · · Slide Bush: Block Type, Anticorrosion · C-128
SMSA-G · · · · · Slide Bush: Block Type, Anticorrosion · C-128
SMSA-GW · · · · Slide Bush: Double-Wide Block Type, Anticorrosion · · · · · · · · · · · · · · · C-130
SMSA-W · · · · · Slide Bush: Double-Wide Block Type, Anticorrosion · · · · · · · · · · · · · · · C-130
SMSB · · · · · · Slide Bush: Block Type, Anticorrosion · C-136
SMSB-G · · · · · Slide Bush: Block Type, Anticorrosion · C-136
SMSD · · · · · · Slide Bush: Clearance Adjustable Open Block Type, Anticorrosion · · · · · · C-146
SMSD-G · · · · · Slide Bush: Clearance Adjustable Open Block Type, Anticorrosion · · · · · · C-146
SMSE · · · · · · · Slide Bush: Open Block Type, Anticorrosion · · · · · · · · · · · · · · · · · · · C-142
SMSE-G · · · · · Slide Bush: Open Block Type, Anticorrosion · · · · · · · · · · · · · · · · · · · C-142
SMSE-GW · · · · Slide Bush: Double-Wide Open Block Type, Anticorrosion · · · · · · · · · · · C-144
SMSE-W · · · · · Slide Bush: Double-Wide Open Block Type, Anticorrosion · · · · · · · · · · · C-144
SMSF · · · · · · · Slide Bush: Round Flange Type, Anticorrosion · · · · · · · · · · · · · · · · · · · C- 24
SMSF-E · · · · · Slide Bush: Round Flange Pilot End Type, Anticorrosion · · · · · · · · · · · · C- 30
SMSF-G · · · · · Slide Bush: Round Flange Type, Anticorrosion · · · · · · · · · · · · · · · · · · · C- 24
SMSF-G-E · · · · Slide Bush: Round Flange Pilot End Type, Anticorrosion · · · · · · · · · · · · C- 30
SMSF-GW · · · · Slide Bush: Round Flange Double-Wide Type, Anticorrosion · · · · · · · · · · C- 38
SMSF-GW-E · · Slide Bush: Round Flange Double-Wide Pilot End Type, Anticorrosion · · · C- 50
SMSF-W · · · · · Slide Bush: Round Flange Double-Wide Type, Anticorrosion · · · · · · · · · · C- 38
SMSF-W-E · · · · Slide Bush: Round Flange Double-Wide Pilot End Type, Anticorrosion · · · C- 50
SMSFC · · · · · · Slide Bush: Center Mount Round Flange Type, Anticorrosion · · · · · · · · C- 44
SMSFC-G · · · · Slide Bush: Center Mount Round Flange Type, Anticorrosion · · · · · · · · C- 44
SMSJ · · · · · · · Slide Bush: Clearance Adjustable Block Type, Anticorrosion · · · · · · · · · C-140
SMSJ-G · · · · · Slide Bush: Clearance Adjustable Block Type, Anticorrosion · · · · · · · · · C-140
SMSK · · · · · · Slide Bush: Square Flange Type, Anticorrosion · · · · · · · · · · · · · · · · · · · C- 26
SMSK-E · · · · · Slide Bush: Square Flange Pilot End Type, Anticorrosion · · · · · · · · · · · C- 32

www.bergab.ru Берг АБ bergab@ya.ru Тел. (495)-228-06-21, факс (495) 223-3071

www.bergab.ru Берг АБ bergab@ya.ru Тел. (495)-228-06-21, факс (495) 223-3071

SMSK-G · · · · · Slide Bush: Square Flange Type, Anticorrosion · · · · · · · · · · · · · · · · · C- 26
SMSK-G-E · · · · Slide Bush: Square Flange Pilot End Type, Anticorrosion · · · · · · · · · · · C- 32
SMSK-GW · · · · Slide Bush: Square Flange Double-Wide Type, Anticorrosion · · · · · · · · · C- 40
SMSK-GW-E · · Slide Bush: Square Flange Double-Wide Pilot End Type, Anticorrosion · · · C- 52
SMSK-W · · · · · Slide Bush: Square Flange Double-Wide Type, Anticorrosion · · · · · · · · · C- 40
SMSK-W-E · · · · Slide Bush: Square Flange Double-Wide Pilot End Type, Anticorrosion · · · C- 52
SMSKC · · · · · · Slide Bush: Center Mount Square Flange Type, Anticorrosion · · · · · · · · C- 46
SMSKC-G · · · · Slide Bush: Center Mount Square Flange Type, Anticorrosion · · · · · · · · C- 46
SMST · · · · · · · Slide Bush: Two Side Cut Flange Type, Anticorrosion · · · · · · · · · · · · C- 28
SMST-E · · · · · Slide Bush: Two Side Cut Pilot End Flange Type, Anticorrosion · · · · · · · C- 34
SMST-G · · · · · Slide Bush: Two Side Cut Flange Type, Anticorrosion · · · · · · · · · · · · C- 28
SMST-G-E · · · · Slide Bush: Two Side Cut Pilot End Flange Type, Anticorrosion · · · · · · · C- 34
SMST-GW · · · · Slide Bush: Two Side Cut Double-Wide Flange Type, Anticorrosion · · · · · C- 42
SMST-GW-E · · · Slide Bush: Two Side Cut Double-Wide Flange Pilot End Type, Anticorrosion · · C- 54
SMST-W · · · · · Slide Bush: Two Side Cut Double-Wide Flange Type, Anticorrosion · · · · · C- 42
SMST-W-E · · · · Slide Bush: Two Side Cut Double-Wide Flange Pilot End Type, Anticorrosion · · C- 54
SMSTC · · · · · · Slide Bush: Two Side Cut Center Flange Type, Anticorrosion · · · · · · · · C- 48
SMSTC-G · · · · Slide Bush: Two Side Cut Center Flange Type, Anticorrosion · · · · · · · · C- 48
SMT · · · · · · · Slide Bush: Two Side Cut Flange Type · C- 28
SMT-E · · · · · · Slide Bush: Two Side Cut Pilot End Flange Type · · · · · · · · · · · · · · · C- 34
SMT-G · · · · · · Slide Bush: Two Side Cut Flange Type · C- 28
SMT-G-E · · · · · Slide Bush: Two Side Cut Pilot End Flange Type · · · · · · · · · · · · · · · C- 34
SMT-GW · · · · · Slide Bush: Two Side Cut Double-Wide Flange Type · · · · · · · · · · · · · C- 42
SMT-GW-E · · · Slide Bush: Two Side Cut Double-Wide Flange Pilot End Type · · · · · · · · C- 54
SMT-W · · · · · · Slide Bush: Two Side Cut Double-Wide Flange Type · · · · · · · · · · · · · C- 42
SMT-W-E · · · · · Slide Bush: Two Side Cut Double-Wide Flange Pilot End Type · · · · · · · · C- 54
SMTC · · · · · · Slide Bush: Two Side Cut Center Flange Type · · · · · · · · · · · · · · · · C- 48
SMTC-G · · · · · Slide Bush: Two Side Cut Center Flange Type · · · · · · · · · · · · · · · · C- 48

SN

SN · · · · · · · · · Shaft: NB Shaft · F- 6
SNB · · · · · · · · Shaft: NB Center-lined Tapped Shaft · F- 9
SNS · · · · · · · · Shaft: NB Shaft, Anticorrosion · F- 7
SNSB · · · · · · · Shaft: NB Center-lined Tapped Shaft, Anticorrosion · · · · · · · · · · · · · F- 9
SNT · · · · · · · · Shaft: NB Pipe Shaft · F- 8
SNW · · · · · · · Shaft: Inch Size Shaft · F- 10
SNWS · · · · · · Shaft: Inch Size Shaft, Anticorrosion · F- 11
SNW-PD · · · · · Shaft: Inch Size Pre-Drilled Shaft · F- 12
SNWS-PD · · · · Shaft: Inch Size Pre-Drilled Shaft, Anticorrosion · · · · · · · · · · · · · · · F- 13

SP

SPLFS · · · · · · Stroke Ball Spline · B- 38
SPR · · · · · · · · Rotary Ball Spline · B- 32

SR

SR · · · · · · · · · Stroke Bush: Standard · E- 4
SR-B · · · · · · · Stroke Bush: Double Retainer Type · E- 6
SR-BUU · · · · · Stroke Bush: Double Retainer Type with Seals · · · · · · · · · · · · · · · · E- 7
SR-UU · · · · · · Stroke Bush: Standard with Seals · E- 5
SRE · · · · · · · · Slide Rotary Bush · E- 12
SREK · · · · · · · Slide Rotary Bush: Square Flange Type · · · · · · · · · · · · · · · · · · · E- 14

SS

SS · · · · · · · · · Slide Screw · I- 7
SSP · · · · · · · · Ball Spline: Cylindrical Type · B- 14
SSP-C · · · · · · Ball Spline: Commercial Spline Assembly with SSP nut · · · · · · · · · · · B- 25
SSP-S · · · · · · Ball Spline: Standard Spline Assembly with SSP nut · · · · · · · · · · · · B- 24
SSPB · · · · · · · Ball Spline: Block Type · B- 22
SSPB-C · · · · · Ball Spline: Commercial Spline Assembly with SSPB nut · · · · · · · · · · · B- 25
SSPB-S · · · · · Ball Spline: Standard Spline Assembly with SSPB nut · · · · · · · · · · · · B- 24
SSPF · · · · · · · Ball Spline: Round Flange Type · B- 18
SSPFS · · · · · · Ball Spline: Round Flange Type,Anticorrosion · · · · · · · · · · · · · · · · B- 18
SSPF-C · · · · · Ball Spline: Commercial Spline Assembly with SSPF nut · · · · · · · · · · · B- 25
SSPF-S · · · · · Ball Spline: Standard Spline Assembly with SSPF nut · · · · · · · · · · · · B- 24
SSPM · · · · · · Ball Spline: Cylindrical Keyless Type · B- 16
SSPM-S · · · · · Ball Spline: Standard Spline Assembly with SSPM nut · · · · · · · · · · · B- 24
SSPS · · · · · · · Ball Spline: Cylindrical Type,Anticorrosion · · · · · · · · · · · · · · · · · B- 14
SSPT · · · · · · · Ball Spline: Two Side Cut Flange Type · · · · · · · · · · · · · · · · · · · B- 20
SSPT-S · · · · · Ball Spline: Standard Spline Assembly with SSPT nut · · · · · · · · · · · B- 24

SV

SV · · · · · · · · · Slide Way · G- 14
SVS · · · · · · · · Slide Way: Anticorrosion · G- 14
SVT · · · · · · · · Slide Table · G- 32
SVTS · · · · · · · Slide Table: Anticorrosion · G- 32
SVW · · · · · · · Slide Way: Center Rail Type · G- 22
SVWS · · · · · · Slide Way: Center Rail Type, Anticorrosion · · · · · · · · · · · · · · · · · G- 22

SW

SW · · · · · · · · · Slide Bush (Inch Standard): Standard Type · · · · · · · · · · · · · · · · C- 90
SW-AJ · · · · · · Slide Bush (Inch Standard): Clearance Adjustable Type · · · · · · · · · · · C- 92
SW-G · · · · · · · Slide Bush (Inch Standard): Standard Type · · · · · · · · · · · · · · · · C- 90
SW-G-AJ · · · · Slide Bush (Inch Standard): Clearance Adjustable Type · · · · · · · · · · · C- 92
SW-G-OP · · · · Slide Bush (Inch Standard): Open Type · · · · · · · · · · · · · · · · · · · C- 94
SW-GR · · · · · · Slide Bush (Inch Standard): Self-Aligning Type · · · · · · · · · · · · · · C- 90
SW-GR-AJ · · · · Slide Bush (Inch Standard): Self-Aligning, Clearance Adjustable Type · · · C- 92
SW-GR-OP · · · Slide Bush (Inch Standard): Self-Aligning, Open Type · · · · · · · · · · · · C- 94
SW-GW · · · · · · Slide Bush (Inch Standard): Double-Wide Type · · · · · · · · · · · · · · · C- 96
SW-OP · · · · · · Slide Bush (Inch Standard): Open Type · · · · · · · · · · · · · · · · · · · C- 94

www.bergab.ru Берг АБ bergab@ya.ru Тел. (495)-228-06-21, факс (495) 223-3071

www.bergab.ru Берг АБ bergab@ya.ru Тел. (495)-228-06-21, факс (495) 223-3071

SW-W · · · · · · · Slide Bush (Inch Standard): Double-Wide Type · · · · · · · · · · · · · · · · · C- 96
SWA · · · · · · · Slide Bush (Inch Standard): Block Type · C-154
SWA-G · · · · · · Slide Bush (Inch Standard): Block Type · C-154
SWA-GR · · · · · Slide Bush (Inch Standard): Self-Aligning, Block Type · · · · · · · · · · · · · C-154
SWD · · · · · · · Slide Bush (Inch Standard): Clearance Adjustable Open Block Type · · · · C-158
SWD-G · · · · · · Slide Bush (Inch Standard): Clearance Adjustable Open Block Type · · · · C-158
SWD-GR · · · · · Slide Bush (Inch Standard): Self-Aligning Clearance Adjustable Open Block Type · · C-158
SWJ · · · · · · · · Slide Bush (Inch Standard): Clearance Adjustable Block Type · · · · · · · · C-156
SWJ-G · · · · · · Slide Bush (Inch Standard): Clearance Adjustable Block Type · · · · · · · · C-156
SWJ-GR · · · · · Slide Bush (Inch Standard): Self-Aligning Clearance Adjustable Block Type · · · C-156
SWF · · · · · · · · Slide Bush (Inch Standard): Round Flange Type · · · · · · · · · · · · · · · · C- 98
SWF-G · · · · · · Slide Bush (Inch Standard): Round Flange Type · · · · · · · · · · · · · · · · C- 98
SWF-GW · · · · · Slide Bush (Inch Standard): Round Flange Double-Wide Type · · · · · · · · C-104
SWF-W · · · · · · Slide Bush (Inch Standard): Round Flange Double-Wide Type · · · · · · · · C-104
SWFC · · · · · · · Slide Bush (Inch Standard): Center Mount Round Flange Type · · · · · · · C-108
SWFC-G · · · · · Slide Bush (Inch Standard): Center Mount Round Flange Type · · · · · · · C-108
SWK · · · · · · · Slide Bush (Inch Standard): Square Flange Type · · · · · · · · · · · · · · · · C-100
SWK-G · · · · · · Slide Bush (Inch Standard): Square Flange Type · · · · · · · · · · · · · · · · C-100
SWK-GW · · · · · Slide Bush (Inch Standard): Square Flange Double-Wide Type · · · · · · · · C-106
SWK-W · · · · · · Slide Bush (Inch Standard): Square Flange Double-Wide Type · · · · · · · · C-106
SWKC · · · · · · Slide Bush (Inch Standard): Center Mount Square Flange Type · · · · · · · C-110
SWKC-G · · · · · Slide Bush (Inch Standard): Center Mount Square Flange Type · · · · · · · C-110
SWS · · · · · · · Slide Bush (Inch Standard): Standard Type, Anticorrosion · · · · · · · · · · C- 90
SWS-AJ · · · · · Slide Bush (Inch Standard): Clearance Adjustable Type, Anticorrosion · · C- 92
SWS-G · · · · · · Slide Bush (Inch Standard): Standard Type, Anticorrosion · · · · · · · · · · C- 90
SWS-G-AJ · · · Slide Bush (Inch Standard): Clearance Adjustable Type, Anticorrosion · · C- 92
SWS-G-OP · · · Slide Bush (Inch Standard): Open Type, Anticorrosion · · · · · · · · · · · · C- 94
SWS-GW · · · · · Slide Bush (Inch Standard): Double-Wide Type, Anticorrosion · · · · · · · · C- 96
SWS-OP · · · · · Slide Bush (Inch Standard): Open Type, Anticorrosion · · · · · · · · · · · · C- 94
SWS-W · · · · · · Slide Bush (Inch Standard): Double-Wide Type, Anticorrosion · · · · · · · · C- 96
SWSA · · · · · · Slide Bush (Inch Standard): Block Type, Anticorrosion · · · · · · · · · · · · C-154
SWSA-G · · · · · Slide Bush (Inch Standard): Block Type, Anticorrosion · · · · · · · · · · · · C-154
SWSD · · · · · · Slide Bush (Inch Standard): Clearance Adjustable Open Block Type, Anticorrosion · · C-158
SWSD-G · · · · · Slide Bush (Inch Standard): Clearance Adjustable Open Block Type, Anticorrosion · · · C-158
SWSF · · · · · · · Slide Bush (Inch Standard): Round Flange Type, Anticorrosion · · · · · · · C- 98
SWSF-G · · · · · Slide Bush (Inch Standard): Round Flange Type, Anticorrosion · · · · · · · C- 98
SWSF-GW · · · · Slide Bush (Inch Standard): Round Flange Double-Wide Type, Anticorrosion · · · C-104
SWSF-W · · · · · Slide Bush (Inch Standard): Round Flange Double-Wide Type, Anticorrosion · · · C-104
SWSFC · · · · · · Slide Bush (Inch Standard): Center Mount Round Flange Type, Anticorrosion · · C-108
SWSFC-G · · · · Slide Bush (Inch Standard): Center Mount Round Flange Type, Anticorrosion · · C-108
SWSJ · · · · · · · Slide Bush (Inch Standard): Clearance Adjustable Block Type, Anticorrosion · · C-156
SWSJ-G · · · · · Slide Bush (Inch Standard): Clearance Adjustable Block Type, Anticorrosion · · C-156
SWSK · · · · · · Slide Bush (Inch Standard): Square Flange Type, Anticorrosion · · · · · · · C-100
SWSK-G · · · · · Slide Bush (Inch Standard): Square Flange Type, Anticorrosion · · · · · · · C-100
SWSK-GW · · · · Slide Bush (Inch Standard): Square Flange Double-Wide Type, Anticorrosion · · C-106
SWSK-W · · · · · Slide Bush (Inch Standard): Square Flange Double-Wide Type, Anticorrosion · · C-106
SWSKC · · · · · · Slide Bush (Inch Standard): Center Mount Square Flange Type, Anticorrosion · · · C- 110
SWSKC-G · · · · Slide Bush (Inch Standard): Center Mount Square Flange Type, Anticorrosion · · · C- 110
SWST · · · · · · · Slide Bush (Inch Standard): Two Side Cut Flange Type, Anticorrosion · · · C-102
SWST-G · · · · · Slide Bush (Inch Standard): Two Side Cut Flange Type, Anticorrosion · · · C-102
SWT · · · · · · · Slide Bush (Inch Standard): Two Side Cut Flange Type · · · · · · · · · · · · C-102
SWT-G · · · · · · Slide Bush (Inch Standard): Two Side Cut Flange Type · · · · · · · · · · · · C-102

SY

SYBS · · · · · · · Miniature Slide: Ultra Compact Type · G- 50
SYT · · · · · · · · Slide Table: Compact Type · G- 38
SYT-D · · · · · · Slide Table: Compact Type with Counterbored Rail · · · · · · · · · · · · · · G- 42
SYTS · · · · · · · Slide Table: Compact Type, Anticorrosion · · · · · · · · · · · · · · · · · · · G- 38
SYTS-D · · · · · Slide Table: Compact Type with Counterbored Rail, Anticorrosion · · · · · G- 42

TK

TK · · · · · · · · · TOPBALL Slide Bush (Euro Standard): Standard Type · · · · · · · · · · · · D- 6
TK-OP · · · · · · TOPBALL Slide Bush (Euro Standard): Open Type · · · · · · · · · · · · · · D- 6
TKA · · · · · · · · Slide Bush using TOPBALL (Euro Standard): Block Type · · · · · · · · · · · D- 10
TKA-W · · · · · · Slide Bush using TOPBALL (Euro Standard): Double-Wide Block Type · · · D- 11
TKD · · · · · · · · Slide Bush using TOPBALL (Euro Standard): Clearance Adjustable Open Block Type · · D- 14
TKD-W · · · · · · Slide Bush using TOPBALL (Euro Standard): Clearance Adjustable Double-Wide Open Block Type · · D- 15
TKE · · · · · · · · Slide Bush using TOPBALL (Euro Standard): Open Block Type · · · · · · · D- 12
TKE-W · · · · · · Slide Bush using TOPBALL (Euro Standard): Double-Wide Open Block Type · · D- 13

TR

TRF · · · · · · · · Slide Bush: Triple-Wide Round Flange Type · · · · · · · · · · · · · · · · · · C- 56
TRF-E · · · · · · Slide Bush: Triple-Wide Round Flange Pilot End Type · · · · · · · · · · · · C- 64
TRF-G · · · · · · Slide Bush: Triple-Wide Round Flange Type · · · · · · · · · · · · · · · · · · C- 56
TRF-G-E · · · · · Slide Bush: Triple-Wide Round Flange Pilot End Type · · · · · · · · · · · · C- 64
TRFC · · · · · · · Slide Bush: Triple-Wide Intermediate Position Round Flange Type · · · · · C- 60
TRFC-G · · · · · Slide Bush: Triple-Wide Intermediate Position Round Flange Type · · · · · C- 60
TRK · · · · · · · · Slide Bush: Triple-Wide Square Flange Type · · · · · · · · · · · · · · · · · C- 58
TRK-E · · · · · · Slide Bush: Triple-Wide Square Flange Pilot End Type · · · · · · · · · · · · C- 66
TRK-G · · · · · · Slide Bush: Triple-Wide Square Flange Type · · · · · · · · · · · · · · · · · C- 58
TRK-G-E · · · · · Slide Bush: Triple-Wide Square Flange Pilot End Type · · · · · · · · · · · · C- 66
TRKC · · · · · · · Slide Bush: Triple-Wide Intermediate Position Square Flange Type · · · · · C- 62
TRKC-G · · · · · Slide Bush: Triple-Wide Intermediate Position Square Flange Type · · · · · C- 62

TW

TW · · · · · · · · TOPBALL Slide Bush (Inch Standard): Standard Type · · · · · · · · · · · · D- 8
TW-OP · · · · · · TOPBALL Slide Bush (Inch Standard): Open Type · · · · · · · · · · · · · · D- 8
TWA · · · · · · · Slide Bush using TOPBALL (Inch Standard): Block Type · · · · · · · · · · · D- 16

www.bergab.ru Берг АБ bergab@ya.ru Тел. (495)-228-06-21, факс (495) 223-3071

www.bergab.ru Берг АБ bergab@ya.ru Тел. (495)-228-06-21, факс (495) 223-3071

TWA-W · · · · · · Slide Bush using TOPBALL (Inch Standard): Double-Wide Block Type · · · D- 17
TWD · · · · · · · Slide Bush using TOPBALL (Inch Standard): Clearance Adjustable Open Block Type · · D- 20
TWD-W · · · · · · Slide Bush using TOPBALL (Inch Standard): Clearance Adjustable Double-Wide Open Block Type · · D- 21
TWJ · · · · · · · · Slide Bush using TOPBALL (Inch Standard): Clearance Adjustable Block Type · · D- 18
TWJ-W · · · · · · Slide Bush using TOPBALL (Inch Standard): Clearance Adjustable Double-Wide Block Type · · D- 19

W

WA · · · · · · · · Shaft (Inch Standard): Shaft Support Rail · · · · · · · · · · · · · · · · · · · F- 22
WH-A · · · · · · · Shaft (Inch Standard): Alminum Shaft Supporter · · · · · · · · · · · · · · · F- 20

www.bergab.ru Берг АБ bergab@ya.ru Тел. (495)-228-06-21, факс (495) 223-3071

www.bergab.ru Берг АБ bergab@ya.ru Тел. (495)-228-06-21, факс (495) 223-3071

NIPPON BEARING CO., LTD.

2833 Chiya,Ojiya-city,Niigata-pref.,947-8503 JAPAN
Phone:81-258-82-0011 FAX:81-258-81-1135
http://www.nb-linear.co.jp

NB Corporation of America

930 Muirfield Drive, Hanover Park, IL 60133, U.S.A.
Phone: 1 (630) 295-8880 FAX: 1 (630) 295-8881
TOLL FREE: (800) 521-2045

Western Regional Office
2157 O'Toole Ave., Suite D, San Jose, CA 95131, U.S.A.
Phone: 1 (408) 435-1800 FAX: 1 (408) 435-1850
TOLL FREE: (888) 562-4175

Eastern Regional Office
41 Orchard Street, Ramsey, NJ 07446, U.S.A.
Phone: 1 (201) 236-3886 FAX: 1 (201) 236-5112
TOLL FREE: (800) 981-8190

http://www.nbcorporation.com
info@nbcorporation.com

NB Europe B.V.

Boekweitstraat 21, 2153 GK Nieuw-Vennep, The Netherlands
Phone:+31 (0) 252-463-200 FAX:+31 (0) 252-463-209
http://www.nbeurope.com
info@nbeurope.com

No.171E
First Edition: November 1, 2009
※Specifications are subject to change without notice.
©NIPPON BEARING CO.,LTD. All rights reserved.
Reproduction Prohibited. Printed in Japan

www.bergab.ru Берг АБ bergab@ya.ru Тел. (495)-228-06-21, факс (495) 223-3071

TECHNICAL REFERENCE

www.bergab.ru Берг АБ bergab@ya.ru Тел. (495)-228-06-21, факс (495) 223-3071

DEFINITIONS AND DESIGNATIONS OF GEOMETRICAL DEVIATIONS (JIS B0621)

TOLERANCING OF FORM, ORIENTATION, LOCATION AND RUN-OUT (JIS B0021)

STRAIGHTNESS

Straightness indicates the degree of deviation of a straight portion from the geometrical straight line.

Straightness of two directions perpendicular to each other (Axis of a rectangular parallelepiped)

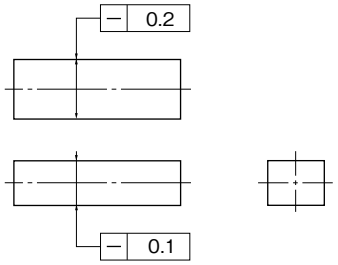

Space inside the prism enclosed by two pairs of parallel planes with intervals of 0.2mm and 0.1mm in the directions of indicated arrows

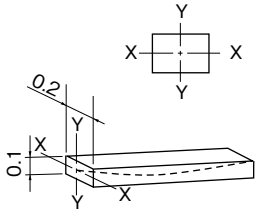

Straightness with no direction defined (Axis of a cylinder)

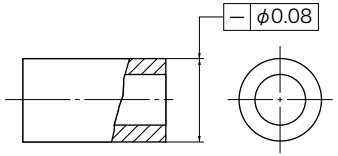

Space inside a cylinder with a diameter of 0.08mm

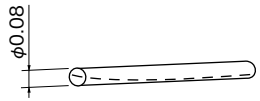

Straightness of a surface element (Generatrix of a cylinder)

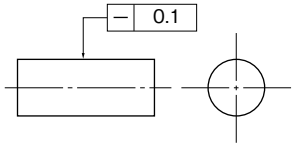

Space between a pair of parallel straight lines with an interval of 0.1mm on an arbitrary plane including the axis

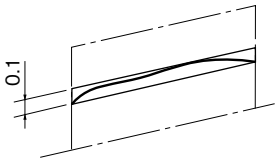

FLATNESS

Flatness indicates the degree of deviation of a flat portion from the geometrical plane.

General flatness

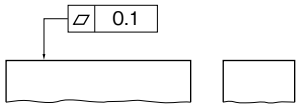

Space between a pair of parallel planes with an interval of 0.1mm

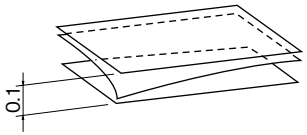

CIRCULARITY

Circularity indicates the degree of deviation of a circular portion from the geometrical circle.

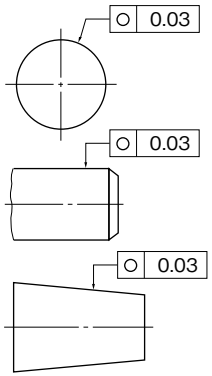

Space between two concentric circles with a radius difference of 0.03mm. Applicable to an arbitrary cross section perpendicular to the axis.

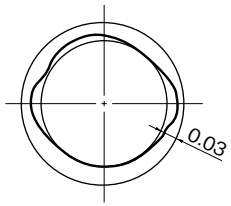

CYLINDRICITY

Cylindricity indicates the degree of deviation of a cylindrical portion from the geometrical cylindrical surface.

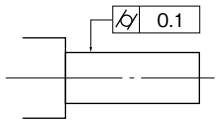

Space between two concentric cylinders with a radius difference of 0.1mm

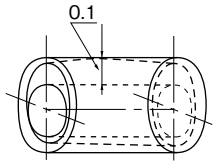

PARALLELISM

Parallelism assumes a combination of two straight portions, a straight portion and a flat portion, or two flat portions which must be parallel to each other. Parallelism indicates, with one of the two portions as a reference, the degree of deviation of the other straight or flat portion from the geometrical straight line or plane parallel to the reference straight line or plane.

Parallelism of a straight portion with respect to the reference plane (Axis of a hole)

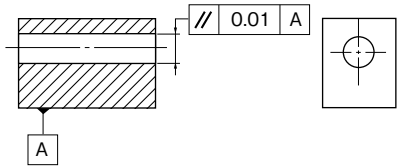

Space between two parallel planes with an interval of 0.01mm, parallel to the reference plane

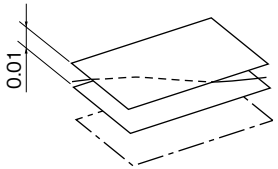

www.bergab.ru Берг АБ bergab@ya.ru Тел. (495)-228-06-21, факс (495) 223-3071

www.bergab.ru Берг АБ bergab@ya.ru Тел. (495)-228-06-21, факс (495) 223-3071

PERPENDICULARITY

Perpendicularity assumes a combination of two straight portions, a straight portion and a flat portion, or two flat portions which must be perpendicular to each other. Perpendicularity indicates, with one of the two portions as a reference, the degree of deviation of the other straight or flat portion from the geometrical straight line or plane.

Perpendicularity of a flat portion with respect to the reference straight line
(with the axis of a cylinder as a reference)

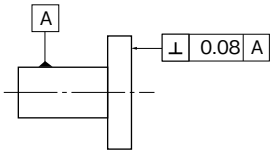

Space between two parallel planes with an interval of 0.08mm, perpendicular to the reference straight line

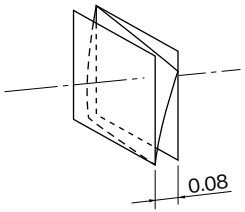

Perpendicularity of a flat portion with respect to the reference plane

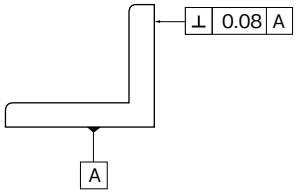

Space between two parallel planes with an interval of 0.08mm, perpendicular to the reference plane

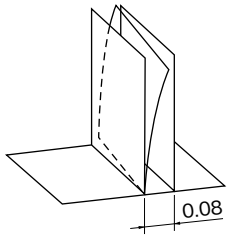

CONCENTRICITY

Concentricity indicates the degree of deviation from the axis which must be on the same straight line as the reference axis.

Concentricity of a cylindrical portion

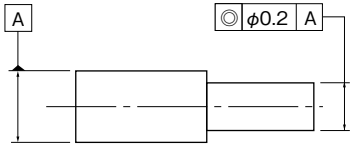

Space inside a cylinder with a diameter of 0.2mm, concentric with the reference axis

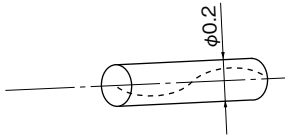

Hardness Conversion Table

Rockwell C scale hardness HRC (load150kg)	Vickers Hardness HV	Brinell hardness HB		Rockwell hardness		Shore hardness HS
		standard sphere	tungsten sphere	HRA A scale load 60 kg Barle pressure point	HRB B scale load 100 kg 1/16-inch-diameter sphere	
68	940	–	–	85.6	–	97
67	900	–	–	85.0	–	95
66	865	–	–	84.5	–	92
65	832	–	739	83.9	–	91
64	800	–	722	83.4	–	88
63	772	–	705	82.8	–	87
62	746	–	688	82.3	–	85
61	720	–	670	81.8	–	83
60	697	–	654	81.2	–	81
59	674	–	634	80.7	–	80
58	653	–	615	80.1	–	78
57	633	–	595	79.6	–	76
56	613	–	577	79.0	–	75
55	595	–	560	78.5	–	74
54	577	–	543	78.0	–	72
53	560	–	525	77.4	–	71
52	544	500	512	76.8	–	69
51	528	487	496	76.3	–	68
50	513	475	481	75.9	–	67
49	498	464	469	75.2	–	66
48	484	451	455	74.7	–	64
47	471	442	443	74.1	–	63
46	458	432	432	73.6	–	62
45	446	421	421	73.1	–	60
44	434	409	409	72.5	–	58
43	423	400	400	72.0	–	57
42	412	390	390	71.5	–	56
41	402	381	381	70.9	–	55
40	392	371	371	70.4	–	54
39	382	362	362	69.9	–	52
38	372	353	353	69.4	–	51
37	363	344	344	68.9	–	50
36	354	336	336	68.4	(109.0)	49
35	345	327	327	67.9	(108.5)	48
34	336	319	319	67.4	(108.0)	47
33	327	311	311	66.8	(107.5)	46
32	318	301	301	66.3	(107.0)	44
31	310	294	294	65.8	(106.0)	43
30	302	286	286	65.3	(105.5)	42
29	294	279	279	64.7	(104.5)	41
28	286	271	271	64.3	(104.0)	41
27	279	264	264	63.8	(103.0)	40
26	272	258	258	63.3	(102.5)	38
25	266	253	253	62.8	(101.5)	38
24	260	247	247	62.4	(101.0)	37
23	254	243	243	62.0	100.0	36
22	248	237	237	61.5	99.0	35
21	243	231	231	61.0	98.5	35
20	238	226	226	60.5	97.8	34
(18)	230	219	219	–	96.7	33
(16)	222	212	212	–	95.5	32
(14)	213	203	203	–	93.9	31
(12)	204	194	194	–	92.3	29
(10)	196	187	187	–	90.7	28
(8)	188	179	179	–	89.5	27
(6)	180	171	171	–	87.1	26
(4)	173	165	165	–	85.5	25
(2)	166	158	158	–	83.5	24
(0)	160	152	152	–	81.7	24

www.bergab.ru Берг АБ bergab@ya.ru Тел. (495)-228-06-21, факс (495) 223-3071

www.bergab.ru Берг АБ bergab@ya.ru Тел. (495)-228-06-21, факс (495) 223-3071

Shaft Dimensional Tolerance

unit/μm

diameter category mm		a13		c12		d6		e6		f5		f6		g5		g6		h5		h6		h7		h8		h9		h10	
greater than	or less	upper	lower	upper	lower	upper	lower	upper	lower	upper	lower	upper	lower	upper	lower	upper	lower	upper	lower	upper	lower	upper	lower	upper	lower	upper	lower	upper	lower
—	3	-270	-410	-60	-160	-20	-26	-14	-20	-6	-10	-6	-12	-2	-6	-2	-8	0	-4	0	-6	0	-10	0	-14	0	-25	0	-40
3	6	-270	-450	-70	-190	-30	-38	-20	-28	-10	-15	-10	-18	-4	-9	-4	-12	0	-5	0	-8	0	-12	0	-18	0	-30	0	-48
6	10	-280	-500	-80	-230	-40	-49	-25	-34	-13	-19	-13	-22	-5	-11	-5	-14	0	-6	0	-9	0	-15	0	-22	0	-36	0	-58
10	14	-290	-560	-95	-275	-50	-61	-32	-43	-16	-24	-16	-27	-6	-14	-6	-17	0	-8	0	-11	0	-18	0	-27	0	-43	0	-70
14	18																												
18	24	-300	-630	-110	-320	-65	-78	-40	-53	-20	-29	-20	-33	-7	-16	-7	-20	0	-9	0	-13	0	-21	0	-33	0	-52	0	-84
24	30																												
30	40	-310	-700	-120	-370	-80	-96	-50	-66	-25	-36	-25	-41	-9	-20	-9	-25	0	-11	0	-16	0	-25	0	-39	0	-62	0	-100
40	50	-320	-710	-130	-380																								
50	65	-340	-800	-140	-440	-100	-119	-60	-79	-30	-43	-30	-49	-10	-23	-10	-29	0	-13	0	-19	0	-30	0	-46	0	-74	0	-120
65	80	-360	-820	-150	-450																								
80	100	-380	-920	-170	-520	-120	-142	-72	-94	-36	-51	-36	-58	-12	-27	-12	-34	0	-15	0	-22	0	-35	0	-54	0	-87	0	-140
100	120	-410	-950	-180	-530																								
120	140	-460	-1090	-200	-600	-145	-170	-85	-110	-43	-61	-43	-68	-14	-32	-14	-39	0	-18	0	-25	0	-40	0	-63	0	-100	0	-160
140	160	-520	-1150	-210	-610																								
160	180	-580	-1210	-230	-630																								
180	200	-660	-1380	-240	-700	-170	-199	-100	-129	-50	-70	-50	-79	-15	-35	-15	-44	0	-20	0	-29	0	-46	0	-72	0	-115	0	-185
200	225	-740	-1460	-260	-720																								
225	250	-820	-1540	-280	-740																								
250	280	-920	-1730	-300	-820	-190	-222	-110	-142	-56	-79	-56	-88	-17	-40	-17	-49	0	-23	0	-32	0	-52	0	-81	0	-130	0	-210
280	315	-1050	-1860	-330	-850																								
315	355	-1200	-2090	-360	-930	-210	-246	-125	-161	-62	-87	-62	-98	-18	-43	-18	-54	0	-25	0	-36	0	-57	0	-89	0	-140	0	-230
355	400	-1350	-2240	-400	-970																								
400	450	-1500	-2470	-440	-1070	-230	-270	-135	-175	-68	-95	-68	-108	-20	-47	-20	-60	0	-27	0	-40	0	-63	0	-97	0	-155	0	-250
450	500	-1650	-2620	-480	-1110																								

js5		js6		j5		j6		k5		k6		m5		m6		n5		n6		p5		p6		r6		r7		diameter category mm	
upper	lower	upper	lower	upper	lower	upper	lower	upper	lower	upper	lower	upper	lower	upper	lower	upper	lower	upper	lower	upper	lower	upper	lower	upper	lower	upper	lower	greater than	or less
±2		±3		±2		+4	-2	+4	0	+6	0	+6	+2	+8	+2	+8	+4	+10	+4	+10	+6	+12	+6	+16	+10	+20	+10	—	3
±2.5		±4		+3	-2	+6	-2	+6	+1	+9	+1	+9	+4	+12	+4	+13	+8	+16	+8	+17	+12	+20	+12	+23	+15	+27	+15	3	6
±3		±4.5		+4	-2	+7	-2	+7	+1	+10	+1	+12	+6	+15	+6	+16	+10	+19	+10	+21	+15	+24	+15	+28	+19	+34	+19	6	10
±4		±5.5		+5	-3	+8	-3	+9	+1	+12	+1	+15	+7	+18	+7	+20	+12	+23	+12	+26	+18	+29	+18	+34	+23	+41	+23	10	14
																												14	18
±4.5		±6.5		+5	-4	+9	-4	+11	+2	+15	+2	+17	+8	+21	+8	+24	+15	+28	+15	+31	+22	+35	+22	+41	+28	+49	+28	18	24
																												24	30
±5.5		±8		+6	-5	+11	-5	+13	+2	+18	+2	+20	+9	+25	+9	+28	+17	+33	+17	+37	+26	+42	+26	+50	+34	+59	+34	30	40
																												40	50
±6.5		±9.5		+6	-7	+12	-7	+15	+2	+21	+2	+24	+11	+30	+11	+33	+20	+39	+20	+45	+32	+51	+32	+60	+41	+71	+41	50	65
																								+62	+43	+73	+43	65	80
±7.5		±11		+6	-9	+13	-9	+18	+3	+25	+3	+28	+13	+35	+13	+38	+23	+45	+23	+52	+37	+59	+37	+73	+51	+86	+51	80	100
																								+76	+54	+89	+54	100	120
±9		±12.5		+7	-11	+14	-11	+21	+3	+28	+3	+33	+15	+40	+15	+45	+27	+52	+27	+61	+43	+68	+43	+88	+63	+103	+63	120	140
																								+90	+65	+105	+65	140	160
																								+93	+68	+108	+68	160	180
±10		±14.5		+7	-13	+16	-13	+24	+4	+33	+4	+37	+17	+46	+17	+51	+31	+60	+31	+70	+50	+79	+50	+106	+77	+123	+77	180	200
																								+109	+80	+126	+80	200	225
																								+113	+84	+130	+84	225	250
±11.5		±16		+7	-16	+16	-16	+27	+4	+36	+4	+43	+20	+52	+20	+57	+34	+66	+34	+79	+56	+88	+56	+126	+94	+146	+94	250	280
																								+130	+98	+150	+98	280	315
±12.5		±18		+7	-18	+18	-18	+29	+4	+40	+4	+46	+21	+57	+21	+62	+37	+73	+37	+87	+62	+98	+62	+144	+108	+165	+108	315	355
																								+150	+114	+171	+114	355	400
±13.5		±20		+7	-20	+20	-20	+32	+5	+45	+5	+50	+23	+63	+23	+67	+40	+80	+40	+95	+68	+108	+68	+166	+126	+189	+126	400	450
																								+172	+132	+195	+132	450	500

Housing Bore Dimensional Tolerance

unit/μm

diameter category mm		E10		E11		F6		F7		F8		G6		G7		H5		H6		H7		H8		H9		H10	
greater than	or less	upper	lower	upper	lower	upper	lower	upper	lower	upper	lower	upper	lower	upper	lower	upper	lower	upper	lower	upper	lower	upper	lower	upper	lower	upper	lower
—	3	+54	+14	+74	+14	+12	+6	+16	+6	+20	+6	+8	+2	+12	+2	+4	0	+6	0	+10	0	+14	0	+25	0	+40	0
3	6	+68	+20	+95	+20	+18	+10	+22	+10	+28	+10	+12	+4	+16	+4	+5	0	+8	0	+12	0	+18	0	+30	0	+48	0
6	10	+83	+25	+115	+25	+22	+13	+28	+13	+35	+13	+14	+5	+20	+5	+6	0	+9	0	+15	0	+22	0	+36	0	+58	0
10	14	+102	+32	+142	+32	+27	+16	+34	+16	+43	+16	+17	+6	+24	+6	+8	0	+11	0	+18	0	+27	0	+43	0	+70	0
14	18																										
18	24	+124	+40	+170	+40	+33	+20	+41	+20	+53	+20	+20	+7	+28	+7	+9	0	+13	0	+21	0	+33	0	+52	0	+84	0
24	30																										
30	40	+150	+50	+210	+50	+41	+25	+50	+25	+64	+25	+25	+9	+34	+9	+11	0	+16	0	+25	0	+39	0	+62	0	+100	0
40	50																										
50	65	+180	+60	+250	+60	+49	+30	+60	+30	+76	+30	+29	+10	+40	+10	+13	0	+19	0	+30	0	+46	0	+74	0	+120	0
65	80																										
80	100	+212	+72	+292	+72	+58	+36	+71	+36	+90	+36	+34	+12	+47	+12	+15	0	+22	0	+35	0	+54	0	+87	0	+140	0
100	120																										
120	140	+245	+85	+335	+85	+68	+43	+83	+43	+106	+43	+39	+14	+54	+14	+18	0	+25	0	+40	0	+63	0	+100	0	+160	0
140	160																										
160	180																										
180	200	+285	+100	+390	+100	+79	+50	+96	+50	+122	+50	+44	+15	+61	+15	+20	0	+29	0	+46	0	+72	0	+115	0	+185	0
200	225																										
225	250																										
250	280	+320	+110	+430	+110	+88	+56	+108	+56	+137	+56	+49	+17	+69	+17	+23	0	+32	0	+52	0	+81	0	+130	0	+210	0
280	315																										
315	355	+355	+125	+485	+125	+98	+62	+119	+62	+151	+62	+54	+18	+75	+18	+25	0	+36	0	+57	0	+89	0	+140	0	+230	0
355	400																										
400	450	+385	+135	+535	+135	+108	+68	+131	+68	+165	+68	+60	+20	+83	+20	+27	0	+40	0	+63	0	+97	0	+155	0	+250	0
450	500																										

JS6		JS7		J6		J7		K6		K7		M6		M7		N6		N7		P6		P7		R6		R7		diameter category mm	
upper	lower	upper	lower	upper	lower	upper	lower	upper	lower	upper	lower	upper	lower	upper	lower	upper	lower	upper	lower	upper	lower	upper	lower	upper	lower	upper	lower	greater than	or less
±3		±5		+2	-4	+4	-6	0	-6	0	-10	-2	-8	-2	-12	-4	-10	-4	-14	-6	-12	-6	-16	-10	-16	-10	-20	—	3
±4		±6		+5	-3	+6	-6	+2	-6	+3	-9	-1	-9	0	-12	-5	-13	-4	-16	-9	-17	-8	-20	-12	-20	-11	-23	3	6
±4.5		±7.5		+5	-4	+8	-7	+2	-7	+5	-10	-3	-12	0	-15	-7	-16	-4	-19	-12	-21	-9	-24	-16	-25	-13	-28	6	10
±5.5		±9		+6	-5	+10	-8	+2	-9	+6	-12	-4	-15	0	-18	-9	-20	-5	-23	-15	-26	-11	-29	-20	-31	-16	-34	10	14
																												14	18
±6.5		±10.5		+8	-5	+12	-9	+2	-11	+6	-15	-4	-17	0	-21	-11	-24	-7	-28	-18	-31	-14	-35	-24	-37	-20	-41	18	24
																												24	30
±8		±12.5		+10	-6	+14	-11	+3	-13	+7	-18	-4	-20	0	-25	-12	-28	-8	-33	-21	-37	-17	-42	-29	-45	-25	-50	30	40
																												40	50
±9.5		±15		+13	-6	+18	-12	+4	-15	+9	-21	-5	-24	0	-30	-14	-33	-9	-39	-26	-45	-21	-51	-35	-54	-30	-60	50	65
																								-37	-56	-32	-62	65	80
±11		±17.5		+16	-6	+22	-13	+4	-18	+10	-25	-6	-28	0	-35	-16	-38	-10	-45	-30	-52	-24	-59	-44	-66	-38	-73	80	100
																								-47	-69	-41	-76	100	120
±12.5		±20		+18	-7	+26	-14	+4	-21	+12	-28	-8	-33	0	-40	-20	-45	-12	-52	-36	-61	-28	-68	-56	-81	-48	-88	120	140
																								-58	-83	-50	-90	140	160
																								-61	-86	-53	-93	160	180
±14.5		±23		+22	-7	+30	-16	+5	-24	+13	-33	-8	-37	0	-46	-22	-51	-14	-60	-41	-70	-33	-79	-68	-97	-60	-106	180	200
																								-71	-100	-63	-109	200	225
																								-75	-104	-67	-113	225	250
±16		±26		+25	-7	+36	-16	+5	-27	+16	-36	-9	-41	0	-52	-25	-57	-14	-66	-47	-79	-36	-88	-85	-117	-74	-126	250	280
																								-89	-121	-78	-130	280	315
±18		±28.5		+29	-7	+39	-18	+7	-29	+17	-40	-10	-46	0	-57	-26	-62	-16	-73	-51	-87	-41	-98	-97	-133	-87	-144	315	355
																								-103	-139	-93	-150	355	400
±20		±31.5		+33	-7	+43	-20	+8	-32	+18	-45	-10	-50	0	-63	-27	-67	-17	-80	-55	-95	-45	-108	-113	-153	-103	-166	400	450
																								-119	-159	-109	-172	450	500

www.bergab.ru Берг АБ bergab@ya.ru Тел. (495)-228-06-21, факс (495) 223-3071