www.bergab.ru Берг АБ bergab@ya.ru Тел. (495)-228-06-21, факс (495) 223-3071

SPRAG-TYPE FREEWHEEL-CLUTCHES

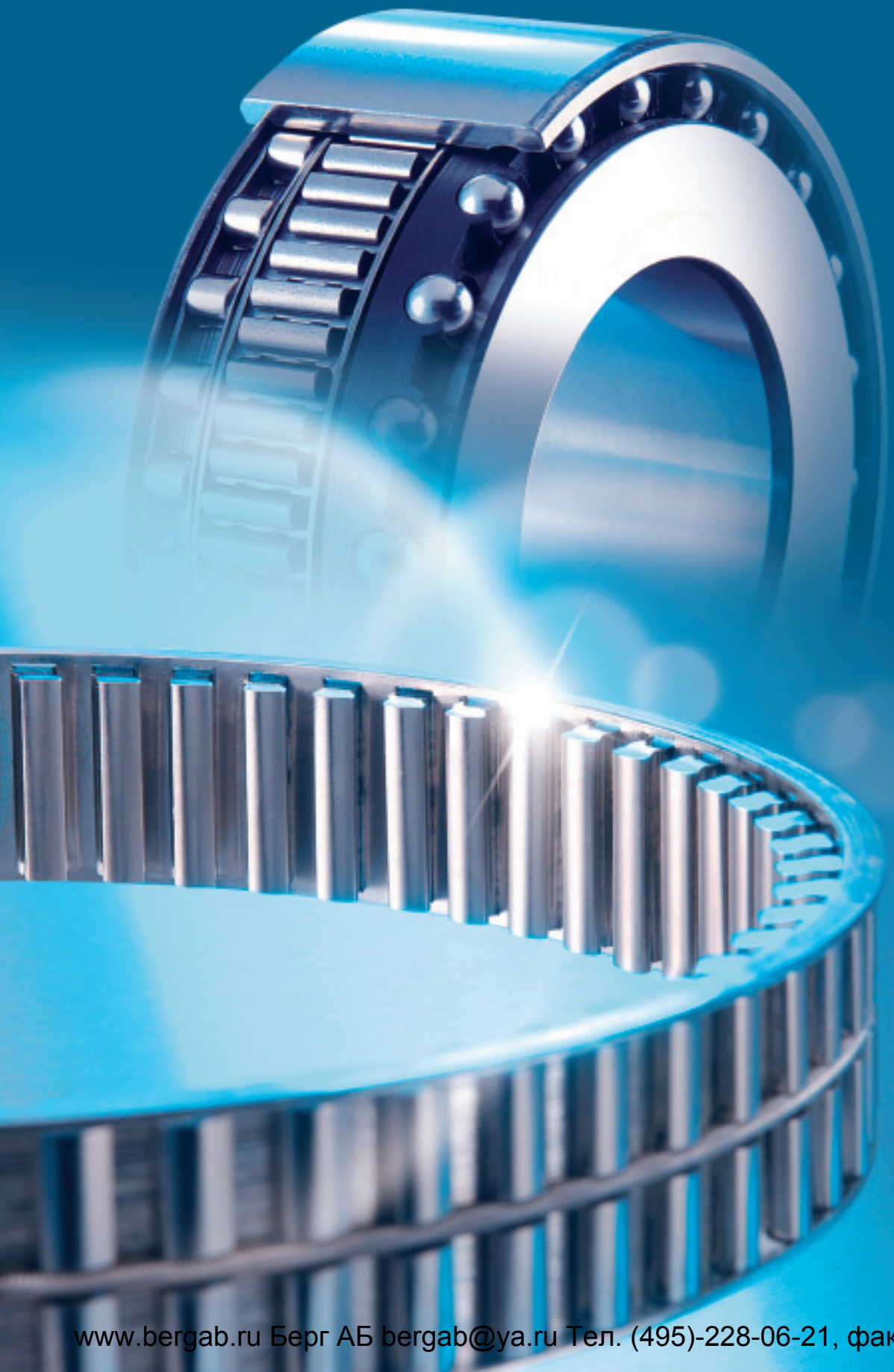

GMN

www.bergab.ru Берг АБ bergab@ya.ru Тел. (495)-228-06-21, факс (495) 223-3071

www.bergab.ru Берг АБ bergab@ya.ru Тел. (495)-228-06-21, факс (495) 223-3071

Freewheel-Clutches

Freewheels are unidirectional couplings, transmitting or supporting torque in one direction by friction and allowing idling in the opposite direction.

GMN manufactures sprag type clutches of two different sprag sizes to be used as idexing devices, backstops or overrunning clutches.
Roller ramp supplements are available too.

Non-Contact Seals

GMN offers two different systems of non-contact seals for wear free sealing of fast turning machine components.

The GMN labyrinth seals are made from steel and aluminium by a special and very sophisticated production process which results in absolute identity of the inner and outer rings labyrinth profile.

The GMN gap seals with return drain are made from high quality, highly resistant plastic material.

Spindles

GMN machine spindles represent more than 70 years of experience in development, production and application. They are used for precision as well as for HSC high-speed processing.
A close-knit network of dealers and repair service workshops guarantees comprehensive service and expert advice.

GMN optospindles, air bearings and scanners are setting new standards in image projection. They have been developed for maximum running accuracy as well as stability in rotational speed and phase.

High Precision Ball Bearings

GMN produces high precision ball bearings in precision class P4 (ABEC7) or better as spindle bearings (angular contact bearings), radial deep groove ball bearings as well as hybrid bearings and special bearings.

In addition GMN offers complete bearing units.

A variety of solid lubricant coating is available for operation under vacuum.

In Nürnberg, GMN Paul Müller Industrie GmbH & Co. KG produces with an experience of more than 90 years high precision ball bearings, machining spindles, free-wheel clutches and non-contact seals for a wide scope.

Most of the products are made for special applications on customer requests.

A world wide net of service stations support all demands of our customers.

GMN is the trademark of
Paul Müller Industrie GmbH & Co. KG.

This catalog reflects the latest design features at the time of printing.
The company reserves the right to change designs and specifications at any time.

Reprint, photomechanical reproductions as well as reproduction from clippings only with license of
Paul Müller Industrie GmbH & Co. KG.

www.bergab.ru Берг АБ bergab@ya.ru Тел. (495)-228-06-21, факс (495) 223-3071

Paul Müller Industrie GmbH & Co. KG

Catalogue
Sprag-Type Freewheel Clutches

Catalogue No. 9050 08/04 E

www.bergab.ru Берг АБ bergab@ya.ru Тел. (495)-228-06-21, факс (495) 223-3071

Contents – Technical Advice 4

Series 400 – 8000: 2 Product Lines for any Shaft Diameter 5

Basic Information 6 – 10
- Function 6
- Function / Torque Determination 7
- Torque Determination 8
- Torque Determination / Idling Requirements 9
- Functional Parts 10

Series 400 11 – 13
- Survey of Types 12
- Installation 13
- Insert Element without Bearing 14
- Roller Bearing 15
- Press Fit at Inner and Outer Ring 16
- Keyway at Inner Ring and Press Fit at Outer Ring 17
- Ball Bearing Sizes 18
- Back Stop with Momentum Lever 19

Tolerance Table 20

Series 8000 21 – 23
- Basic and Specific Information 22
- Survey of Types 23

Lubrication 24/25

Mounting 26

Technical Advice Conversion Factors 27

The standard shaftdiameters covered by Type Series 400 reach from 2 to 80 mm depending on the single design.
For larger diameters we offer different solutions. Either with special sizes or special designs of our type series 400 or clutches of our type series 8000 (based on a 8.33 mm = $^{21}/_{64}$ in high sprag). Your decission for the right sprag size will be supported either by reading this catalog or by getting in contact with our technical staff. We will be pleased by assisting you on your way to the perfect design. Of course without any obligation.
With this catalog we would like to offer a first glance at our capability as well as important data how the right clutch could be determined and how the mating parts should be designed and prepared.

www.bergab.ru Берг АБ bergab@ya.ru Тел. (495)-228-06-21, факс (495) 223-3071

GMN Freewheel Clutches

GMN produce Sprag-Type Freewheel-Clutches only.
These products have proven their reliability in high standard applications all over the world throughout decades.

There are some very special reasons for the high reliability of GMN-Clutches of Series 400:

1. The logarithmic spiral
2. Perfect spring loading
3. Small space requirements
4. Large number of sprags

which result in 3 very important benefits:

1. High accuracy
2. High torque capacity
3. Long life

For leading these benefits to perfect performance and maximum life some prerequisits have to be fulfilled by the user of our clutches.
We give some guide lines regarding: design of mating parts on pages 6 to 9, mounting fits on page 10, lubrication on pages 20/21.
If in doubt, please do not hesitate to contact the technical staff for more detailed information.

Type Series 400

Type series 400 is based on a 4 mm high sprag. It offers clutches for shaft diameters from 2 to 80 mm.
For larger shafts GMN offer the series 8000. Please see on bottom.

Important Applications

Out of a large variety of applications our clutches are used for in many countries, we demonstrate a survey of the most important one's:

- Conveyers (Back Stopping)
- Conveyers (Speed Compensation)
- Copiers (Paper Feeding)
- Diesel Engines (Starter Handle)
- Furniture Production (Glue Roller Drive)
- High Voltage Switches
- Mixers (Safety Clutch)
- Motor Bikes (Automatic Gear)
- Packaging Machines (Overrunning Clutch)
- Paper Handling (Material Feed)
- Printing Presses (Ink Roller Drive)
- Sowing Machines (Seed Feeder)
- Textile Machines (Material Feed)
- Winches (Back Stop).

Type Series 8000

Based on a 8.33 mm high, newly developed sprag we just offer insert elements and customer oriented specials.

Just now we serve shaft sizes from 38 mm to 150 mm. other sizes on request. There are inch sizes available too.

Most of the technical conditions of series 8000 are quite similar to those of series 400 and could be found on pages 6 to 9. Data, specific for series 8000 could be found on page 22.

The complete survey of types of this series, produced right now, together with torque data is shown on page 23.

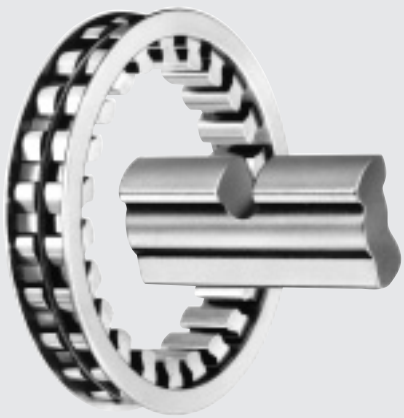

Freewheel-Clutch description

Freewheel-clutches transmit or support torque moment by friction contact in one direction and permit idling in the opposite direction.

Freewheel-clutches are used as:

Indexing elements to change from oscillating to intermittent rotary motion.

Backstops to prevent self reversing due to load condition when the machine is not activated.

Overrunning clutches to maintain driven unit activated even during slowdown, or in the case of two speed operation (by independent motors) to switch to the higher speed by passing the slower.

A large quantity of freewheel-clutches with varying design features and dimensions are available, depending on requirements such as: torque, indexing frequency, idling speed and environment.

The supporting equipment around the clutch has to be built accurately and of high quality for the clutch to operate properly. This is why we offer support units or complete assemblies of free-wheel-clutches.

Lubrication is especially important to obtain maximum life of freewheel-clutches. Good lubrication decreases drag. Please refer to our Lubrication Selection Table for proper selection. See pages 18/19.
GMN Clutches (except the sealed clutches of series FND, FPD, FK 62..-RS, FK 62..-2RS, FKN..-RS and FKN..-2RS) are shipped rustprotected – not lubricated.

For extreme applications, please consult with our technical staff.

The sprag

GMN freewheel-clutches are sprag-type clutches.
The shape and engagement angle of our sprags assure high quality and top performance. We developed two sprags for our 400 – 8000 models, which are unique because of two important features: the engagement curve, especially designed for each size of sprag, based on the special requirements caused by the different sizes of shafts each sprag is supposed to work on and the smallest head surface. We reduced the force of gravity caused by high indexing frequency, through our small and light sprags.

The logarithmic spiraled engagement curve

The logarithmic spiraled engagement curve is the prerequisite for precise indexing and long operating life. Especially for small shaft diameters. To achieve these factors it is important that all sprags engage simultaneously and in the same angle for torque pickup. Equal force acting on all sprags is required from the instant of engagement to full torque transfer. This is derived from the general mathematical formula for logarithmic spirals.

$$r_\gamma = r_o \cdot e^{\cot \psi \cdot \gamma}$$

and

$$\psi = 90° - \alpha_i;\ \alpha_a$$

It is important that the pitch angle remains equal on all points along the tangent line. Furthermore, the engagement angles of the sprags are stabilized in all zones of contact over the entire engagement zone.

The installation of freewheel-clutches causes the sprags to be positioned in varying sloping positions, resulting from the tolerance in the engagement track (shaft and housing) and the eccentricity. Equal force distribution and equal straining forces on all individual sprags are a result of individual engagement and identical engagement angles.

High switching frequency with extra long life is achieved through the theoretical foundation and the practical design. This is why GMN freewheel-clutches are so outstanding.

The logarithmic spiraled engagement curve

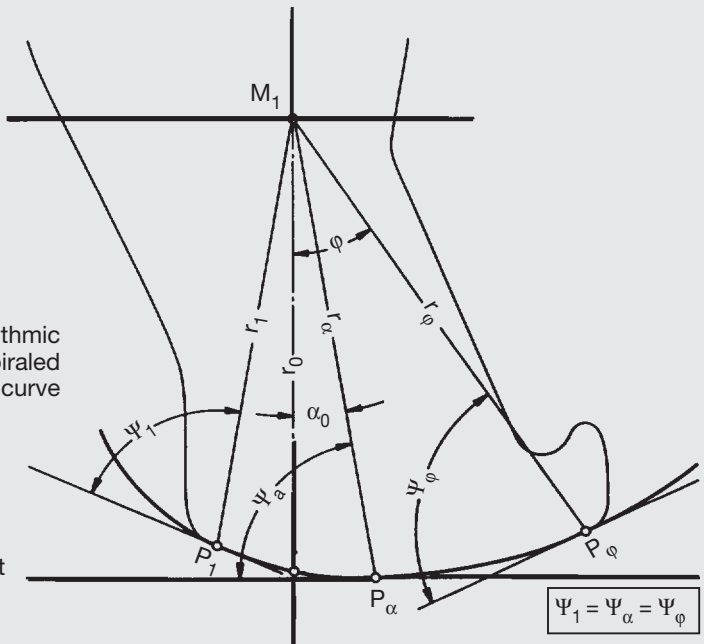

Engagement of sprags

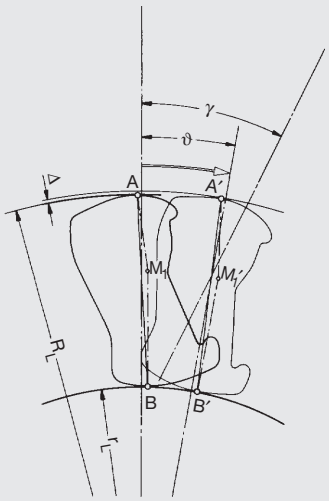

When load is applied, the sprags roll in on their engagement surfaces until a balance of forces between the torque and the tension of all clutch components (shaft, sprag, outer ring) is achieved. The distance and the necessary height difference Δ of the sprag, measured over both engagement tracks, is the operating zone.

The size of the engagement angle γ is determined by the applied torque (moment) and the force of reaction of the expansion Δ from the outer and inner parts. The engagement angle γ creates between outer and inner ring an angle of twist ϑ, which will remain equal with constant operating conditions and should not be considered slippage or intermittent slippage.

To prevent a "tip over" of the sprag at extreme overload, the logarithmic spiral is increased outside of the operating zone. This results in a larger pitch angle ψ and larger engagement anlges α_i and α_a. A failure of a sprag will only take place when the overload is 2 to 3 times the nominal torque moment.

Engagement force

The engagement force acting on the sprags has to be determined for each individual application of the freewheel-clutch to assure the best compromise between idling wear and perfect torque pickup. To keep engagement forces at their lowest level, we designed our freewheel-clutches so that only a small moment of inertia works against the indexing movement.

Basic facts for torque-determination

The torque data, shown in the tables of dimensions are based on the following conditions:

- Solid shaft
- Wall thickness factor of outer part $D/D_L = 1,4$
- Material of the mating parts:
  100 Cr 6 (eq. AISI 52100);
  hardened and tempered;
  HRC = 60^{+4}
  martensitic structure;
  max. alternating bending strength
  $\sigma_{bw} = 750\ N/mm^2$

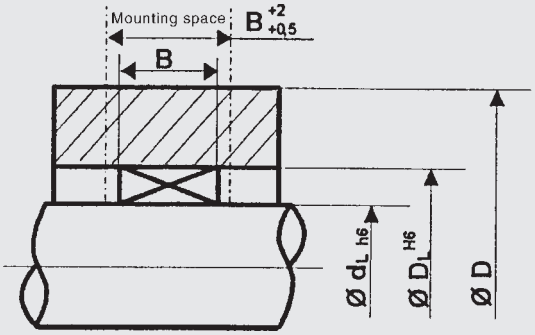

All torque data are related to calculations based on these conditions. There is a safety factor of 1.5 included. This higher value of torque could be reached once without damaging the clutch. If the clutch should be operated under different conditions like different material, smaller wall thickness, hard working conditions (combustion engines) or high temperatures the transmittable torque will be reduced. Please see information page 9. On page 8 you will find torque diagrams for different conditions of materials and wall thickness. Please keep in mind, that there exist different diagrams for the two different series 400 and 8000.

Transmittable Torque based on wall thickness and material

The diagrams offer you a survey on the influences of the material of the mating parts for the factors of wall thickness D/D_L = 1.2/1.4/1.6 in relation to the nominal torque.

For your orientation some material data:

σ_{bw} = 400 N/mm²	34 CrMo 4V	(eq. AISI 4135)	– case hardened, HRC = 60^{+4}; Eht ≥ 1.3 mm
	16 MnCr 5	(eq. AISI 5115)	– case hardened, HRC = 60^{+4}; Eht ≥ 1.3 mm
σ_{bw} = 540 N/mm²	42 Cr Mo 4V	(eq. AISI 4140)	– case hardened, HRC = 60^{+4}; Eht ≥ 1.3 mm
σ_{bw} = 600 N/mm²	20 MnCr 5	(eq. AISI 5120)	– case hardened, HRC = 60^{+4}; Eht ≥ 1.3 mm
σ_{bw} = 750 N/mm²	100 Cr 6	(eq. AISI 52100)	– hardened and tempered; HRC = 60^{+4}

For your information Eht = Hardening depth!

Series 400

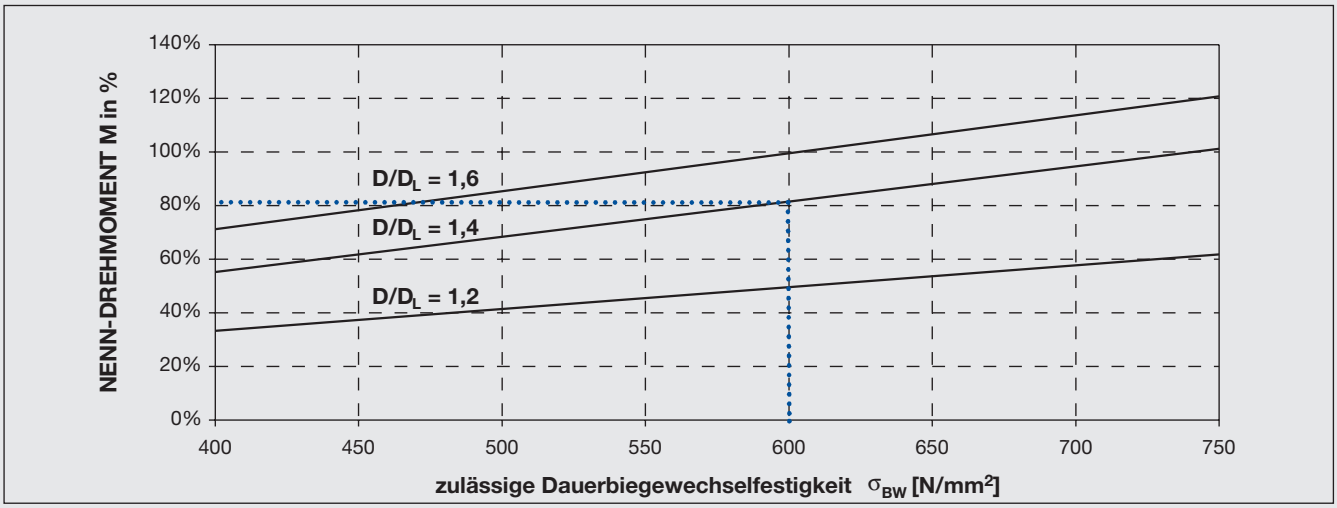

Typenreihe 8000

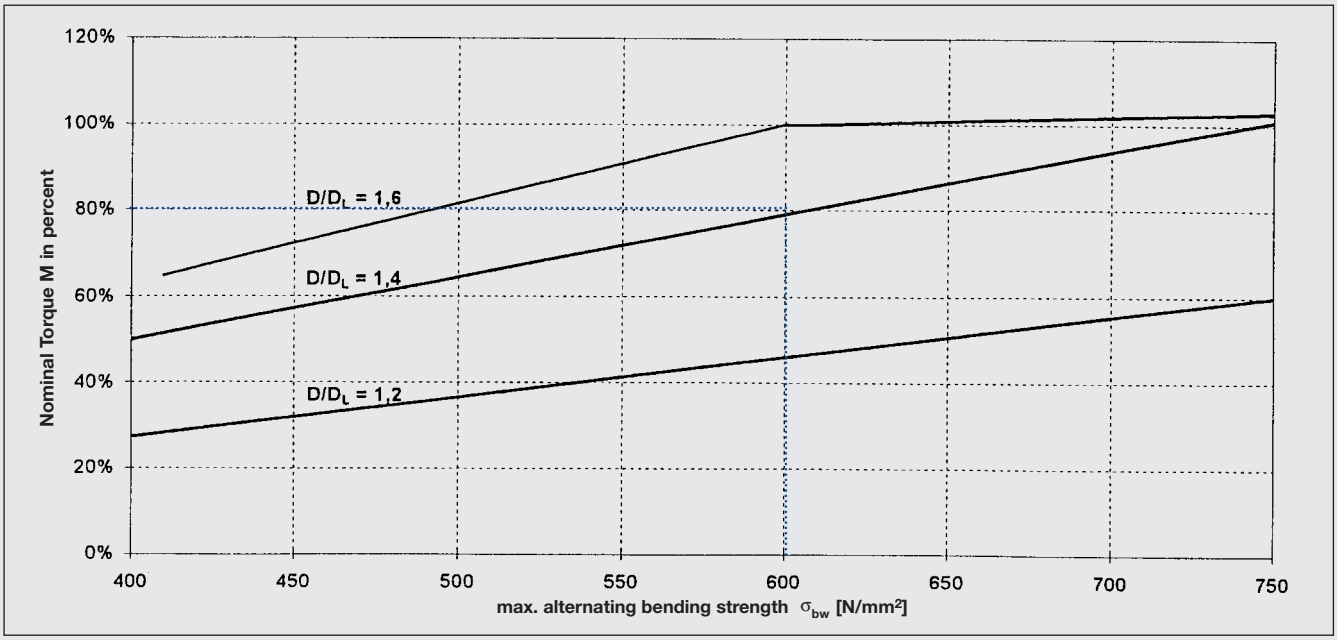

Aditionel information for torque determination (like safety factors) you will find on page 9, or you might contact our technical staff, if in doubt.

• • • • example how to use the diagram for 20MnCr5 – case hardened, HRC 60+4, Eht = 1.3

Idling requirements

We recommend the use of a freewheel-clutch from the "Z" series when it is used as a backstop, exceeding a peripheral speed v > 20 m/min of the inner race-way.

The listed idling speeds n_{max} shown in the dimension tables are maximum values to achieve L_1 = 1000 hours of operating life. Slower revolutions n increase the operating life L.

$$L_1 = 1000 \cdot \left(\frac{n_{max}}{n}\right)^{1,25}$$

Optimum operating life	L_1	Inner ring rotating, oil lubricated
Decreasing operating life	$L_2 = 0.8\ L_1$	Outer ring rotating, oil lubricated
	$L_3 = 0.7\ L_1$	inner ring rotating, grease lubricated
	$L_4 = 0.6\ L_1$	Outer ring rotating, grease lubricated

Nominal torque moment and overload

Depending upon the application in which a freewheel-clutch is used, peak load conditions may be encountered, which go far above the nominal torque moment "M".

If data on peak strain for load conditions are not available, the service factors $S_{A, F, K, M, T}$ listed below can be used with nominal torque moment data.

Indexing element:	$M_t = M_m \cdot S_F \cdot S_M \cdot S_T$
Back-stopping:	$M_t = M_m \cdot S_A \cdot S_T$
Over-running:	$M_t = M_m \cdot S_M \cdot S_K \cdot S_T$
	M_t = theoretical operating torque moment
	M = nominal torque moment (catalog data)
	M_m = average nominal torque moment on the machine
	$M_t \leq M$

The service factors are approximate values and can be used only as a guide for size selection of a freewheel-clutch at given nominal torque moment.

In extreme cases, it is safe to determine the peak torque requirements by strain gauge, especially for the peak load conditions encountered through high switching frequencies, for the selection of a freewheel-clutch.

Moving mass	S_A	S_M
Light mass Small mechanical fixtures electric devices, machine tools	1	1.25
Medium mass Printing presses, machine tools small conveying installations, conveyer or feed systems	1.2	1.65
Large mass Load carrying equipment heavy presses and machines, heavy duty equipment	1.8	2.5

Engines and motors	S_K
Electric motors	1 – 2
internal combustion engines (δ < 1:100) internal combustion engines (δ > 1:100)	1.3 – 2.5 1.7 – 3.3

Indexing frequency Hz		S_F
	1	1.00
Type 400 Z	5	1.05
	10	1.10
	15	1.15
to Type 400 M	20	1.25
	30	1.35
	40	1.65
	60	1.70
over	60	2.50

Freewheel-clutch temp.		S_T
	68° F = 20 °C	1.00
to	104° F = 40 °C	1.05
	140° F = 60 °C	1.10
	176° F = 80 °C	1.20

Clutch design

All torque moment specifications "M" in this catalog correspond with the transferable nominal moment of each freewheel-clutch. The torque moment "M" includes a service factor of 1.5.
Plastic deformation will not take place until the torque moment reaches 1.5 M, caused by momentary overload conditions; at this stage penetrating depth is permissible.

www.bergab.ru Берг АБ bergab@ya.ru Тел. (495)-228-06-21, факс (495) 223-3071

Functional parts

Over and above the mentioned mathematical prerequisites for the engagement surface of the sprags and their proper and reliable functioning, there are design characteristics which make optimum usage possible based on the mathematical conditions.
The sprags with their constant engagement angles, based on the logarithmic spiraled engagement curve, assure exact indexing. This will provide good guidance through the cage and reliable pretension. Through the force direction of the spring, the sprags receive pretension within the cage and are forced to the inside. The enlarged head of the sprag prevents a slip through to the inside.

Press fit of thin walled rings

The thin walled freewheel-clutch rings transmit the torque moment with the friction contact of the press fit. Slippage of the pressed in or pressed on rings is impossible, because the friction contact of the ring to the bore and to the shaft, increases in proportion to the applied torque moment.

Slippage will not occur even when an unusual amount of moment or load takes place. The tangential force $F_{TA} = M/R_L$ respectively. $F_{Ti} = M/r_L$ presses the rings with approximately 20 times the normal force $F_{Na,i} = F_{Ta,i} \cdot \cot \alpha_i$ (α_a). This increases the press fit preset friction contact.

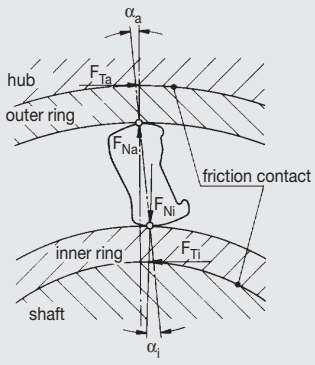

Meander spring

A special three-dimensional meander shaped spring was developed for our freewheel-clutch model FE 400, also called FE 400 M.
This spring is made of spring steel wire, class II quality and produced in the endless method on a spring forming machine designed and built by GMN.

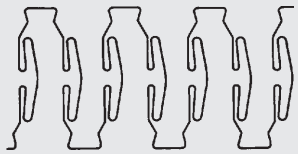

Freewheel-Clutch FE 400 (FE 400 M)

These freehweel-clutches are especially suited for every precise and fast indexing application.

The meander spring is hooked to the sprag and supported through the cage. Over a long spring distance with two force components F_B and F_T (bending and torsion) spring tension F_R is maintained to optimum pretension for each of the individual sprags.

This freewheel-clutch can also be used as a backstop with idling speeds of $v \leqq 20$ m/min .

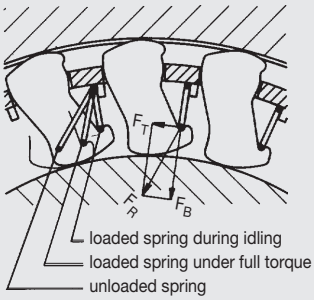

Freewheel-Clutch FE 400 Z and FE 400 Z2

This model is used as a backstop or overrunning clutch at idling speeds of $v < 60$ m/min.

A circular spring is placed over all sprags for pretension, due to the small leverarm “s”. This causes a minor drag torque which results in free running.

This type of pretension is available in two series (Z; Z2) with different widths (see page 14).

For low indexing frequency $f_s \leqq 20$ Hz this freewheel-clutch can be used as an indexing element.

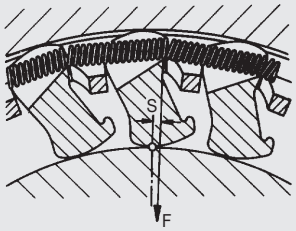

Freewheel-Clutch FE 400 S

The operating range of this freewheel-clutch is at very high idling speeds of $v > 60$ m/min.

The design is equal to type Z. This clutch has two cages. The first cage has friction contact with the outer ring. The brass drag cage, which has friction contact on the inner ring, allows the sprags to lift off of the inner track for wear free running in the idling direction.
This freewheel-clutch cannot be used as an indexing element.
This type is not a standard item!

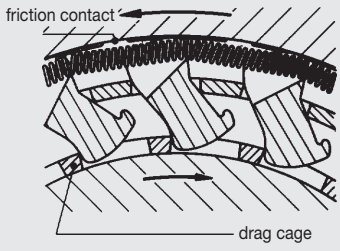

www.bergab.ru Берг АБ bergab@ya.ru Тел. (495)-228-06-21, факс (495) 223-3071

GMN Freewheel-Clutches
Series 400

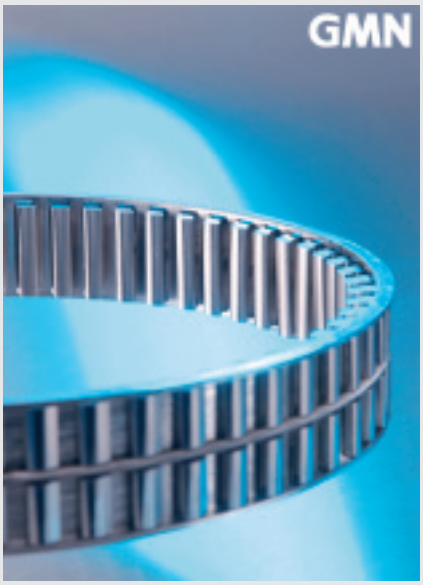

www.bergab.ru Берг АБ bergab@ya.ru Тел. (495)-228-06-21, факс (495) 223-3071

Freewheel-Clutch

as an insert element, unsupported

Roller Bearing RL 400

Clutch support bearing

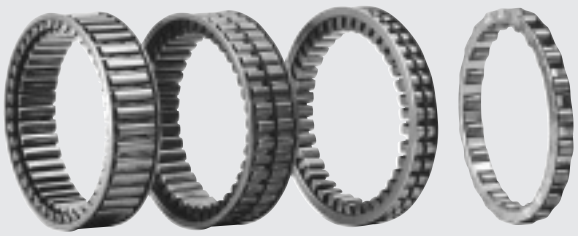

FE 400 FE 400 Z FE 400 Z2 RL 400

FE	400 (M)	Shaft diameter of 14 to 80 mm
FE	400 Z	Shaft diameter of 4 to 80 mm
FE	400 Z2	Shaft diameter of 2 to 60 mm
RL	400	Roller Bearing Shaft diameter of 4 to 80 mm

Ball Bearing Freewheel-Clutch

with pressfit at inner and outer ring

Dimensions according to deep groove ball bearings DIN 625 bearing series 62

Clutch-Series FK 62 . .

Same sizes available with keyway too.

Clutch-Series FKN 62 . .

FKN 62 . . FK 62 . .

	Shaft diameters 17 to 40 mm
FK 62..	open
FK 62..-RS	sealed on one side
	Shaft diameters 20 to 40 mm
FK 62..-2RS	sealed on both sides
	Shaft diameters 17 to 40 mm
FKN 62..	open
FKN 62..-RS	sealed on one side
	Shaft diameters 20 to 40 mm
FKN 62..-2RS	sealed on both sides
	Shaft diameter 20 mm
FK 6304-2RS	sealed on both sides with plain inner ring only
Other sizes and special dimensions on request	

Freewheel-Clutch

with press fit at inner and outer ring

FR 400 FP 400 FPD 400

FR	400	shaft diameter 10 to 60 mm
FP	400	shaft diameter 10 to 60 mm
FPD	400	shaft diameter 30 and 40 mm; sealed

Freewheel-Clutch

with keyway at inner ring and press fit at outer ring

FRN 400 FN 400 FND 400

FRN	400	shaft diameter 10 to 45 mm
FN	400	shaft diameter 15 to 40 mm
FND	400	shaft diameter 15 to 40 mm; sealed

Backstop

with momentum lever

RA 400
shaft diameters
15 mm to 40 mm

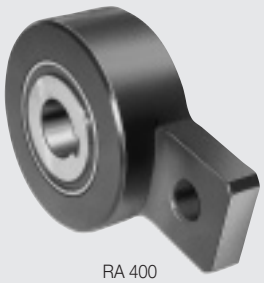

RA 400

www.bergab.ru Берг АБ bergab@ya.ru Тел. (495)-228-06-21, факс (495) 223-3071

www.bergab.ru Берг АБ bergab@ya.ru Тел. (495)-228-06-21, факс (495) 223-3071

1. Freewheel-Clutches FE 400/Z/Z2/S and Roller Bearing RL 400

1.1. Surface and hardness:
The races of freewheel-clutches and roller bearings must be hardened and ground. The hardening depth (Eht) for surface hardness must be ≥ 1.3 mm for transmitting full torque moments. Lower torque moments require correspondingly lower depths.

Hardness: HRC = 60^{+2}
Eht ≧ 1.3 mm
Surface: R_z ≦ 1.6 µm

1.2. Mounting tolerance

Bore D_L = H6
Shaft d_L = h5
See page 22

1.3. Freewheel-clutch and roller bearing require a collar, ring or snap ring (round edge towards freewheel-clutch) as a guide.

1.4. For ease of mounting, shaft and bore should have a chamfered edge.

1.5. The rollers of the roller bearings RL 400 can be ordered in eleven different tolerance classes, in steps of 2 microns ranging from +10 to –10 microns.

Order example:
50 roller bearings with 34 mm diameter x 42 mm diameter and tolerance class of +4 microns:

50 RL 442 + 4.

If there is no tolerance ordered rollers of tolerance –4 microns will be delivered:

50 RL 442

2. Freewheel-Clutches FR/FP/FPD/FRN/FN and FND 400

(M-, Z- and S models)

2.1. Machine parts, in which freewheel-clutches are pressed in or on can be of ferrous or nonferrous material.

2.2. Mounting tolerance:

thin walled ring with pressfit
Bore D = H6
thin walled ring with pressfit
Shaft d = h5
ring with keyway
Shaft d = js6 (k5)
See page 22

2.3. Insert freewheel-clutches of models FR and FRN 400 have to be secured in the axial direction.

2.4. For pressed in or on freewheel-clutch rings, no retainers are necessary for axial or radial security.

2.5. The inner rings of freewheel-clutches FRN 400 have to be secured. The inner rings with keyway on the other models have to be secured in the axial direction only, if the pressed on outer machine part (gear or lever) is not axially secured.

2.6. When mounting freewheel-clutches with bearings do not apply pressure to bearing balls.

2.7. After installation a radial clearance between C2 and C5 will be reached. To create a clearance of C2 you should produce your shaft at the highest point and your housing at the lowest point of the allowed tolerances.bearing balls.

2.8. max. temperature:
with seals 110 °C (230 °F)
without seals 170 °C (340 °F)

3. Ball Bearing Sizes FK 62 . ./FKN 62 . .

3.1. Connecting parts like 2.1.

3.2. Mounting tolerance:

Bore D = N7
Shaft d = n6
See page 22

3.3. For pressed in or on rings, no retainers are necessary for axial or radial security.

3.4. When mounting do not apply pressure to bearing balls.

3.5. The RSR-seals used for these clutches would seal against dust and grease lubrication. Oil lubrication and merging into liquids is not possible.

3.6. Even the keywayed inner rings of series FKN 62.. have to be pressfitted for proper function. Pressfit will be achieved by using the correct tolerance of the shaft “n6”!.

3.7. max. temperature: 110 °C (230 °F)

4. Backstop with Momentum Lever RA 400

4.1. Connecting shaft like 2.1.

4.2. Mounting tolerance:

Shaft d = js6 (k5)
See page 20

4.3. The inner ring of the backstop has to be axially secured on the shaft.

4.4. The backstop can only be mounted or disassembled by way of the inner ring so that the bearing balls are not damaged.

4.5. max. temperature: 110 °C (230 °F)

5. Engagement Direction

Different series of freewheel-clutches need to be ordered with the correct engagement direction. The engagement direction can be specified by catalog number.

Engagement direction right:
When the shaft is driving to the right (clockwise) and the outer ring is driven through the sprags, (direction of view from the mounting side) suffix “R” not necessary.

Engagement direction left:
When ordering a freewheel-clutch with opposite engagement, the suffix “L” must be placed after the catalog number.

For example: FE 422 L;
FK 6205-RSL; RA 442 L;
RA 453 ZL

6. Lubrication

GMN Clutches (except the sealed clutches of series FND, FPD, FK 62 . .-RS, FK 62 . .-2RS, FKN 62 . .-RS, FKN 62 . .-2RS, RA) are shipped rust protected – not lubricated.

See pages 22/23

Attention: Please take care for total cleaning of freewheel rings and mating parts before pressfitting (no grease particles left in the pressfit area).

www.bergab.ru Берг АБ bergab@ya.ru Тел. (495)-228-06-21, факс (495) 223-3071

GMN

FE 400 FE 400 Z FE 400 Z2

Mounting space

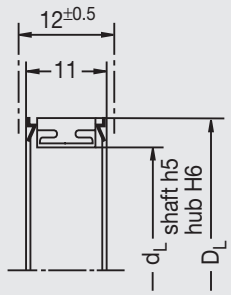

Mounting space

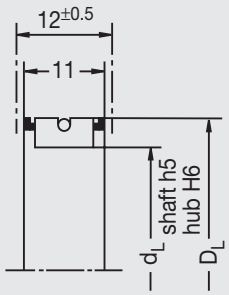

Mounting space

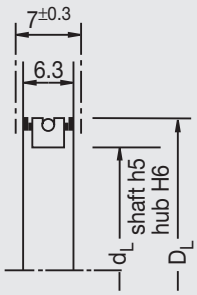

Dimensions [mm]		FE 400			FE 400 Z			FE 400 Z2			Idling speed Clutch	Dimensions [inch]	
d_L	D_L	Part-number	Torque M [ftlb]	[Nm]	Part number	Torque M [ftlb]	[Nm]	Part number	Torque M [ftlb]	[Nm]	n_{max} [RPM]	d_L	D_L
2	10							FE 410 Z2 *	0.2	0.3	10 000	.0787	.3937
4	12				FE 412 Z	2.2	3	FE 412 Z2 *	1.3	1.8	10 000	.1575	.4724
5	13							FE 413 Z2	2.1	2.9	9 000	.1969	.5118
6	14				FE 414 Z	5	7	FE 414 Z2	1.9	2.6	8 500	.2362	.5512
8	16				FE 416 Z *	9	12	FE 416 Z2	5.6	7.6	7 500	.3150	.6299
14	22	FE 422	36	48	FE 422 Z *	32	44	FE 422 Z2	16	21	5 300	.5512	.8661
15	23	FE 423	40	55	FE 423 Z	36	48	FE 423 Z2 *	18	24	5 200	.5906	.9055
17	25	FE 425	50	68	FE 425 Z	43	58	FE 425 Z2	22	30	4 700	.6693	.9843
19	27	FE 427	59	80	FE 427 Z	49	66	FE 427 Z2 *	27	36	4 400	.7480	1.0630
20	28	FE 428	64	87	FE 428 Z	55	75	FE 428 Z2	29	39	4 200	.7874	1.1024
22	30	FE 430	75	101	FE 430 Z	64	87	FE 430 Z2 *	34	46	4 000	.8661	1.1811
24	32	FE 432	86	116	FE 432 Z	71	97	FE 432 Z2	39	52	3 700	.9449	1.2598
25	33	FE 433	92	124	FE 433 Z	79	107	FE 433 Z2 *	41	56	3 600	.9843	1.2992
27	35	FE 435	104	141	FE 435 Z	90	121	FE 435 Z2	47	64	3 400	1.0630	1.3780
29	37	FE 437	117	158	FE 437 Z	101	137	FE 437 Z2 *	53	71	3 200	1.1417	1.4567
30	38	FE 438	124	168	FE 438 Z *	106	144	FE 438 Z2 *	56	76	3 100	1.1811	1.4960
34	42	FE 442	152	207	FE 442 Z	131	178	FE 442 Z2	69	93	2 800	1.3386	1.6535
35	43	FE 443	160	217	FE 443 Z	138	187	FE 443 Z2	72	98	2 700	1.3780	1.6929
40	48	FE 448	201	272	FE 448 Z	173	235	FE 448 Z2 *	90	122	2 500	1.5748	1.8898
45	53	FE 453	246	333	FE 453 Z	207	281	FE 453 Z2	108	146	2 200	1.7717	2.0866
50	58	FE 458 *	295	400	FE 458 Z	254	345	FE 458 ZS	131	178	2 000	1.9685	2.2835
51	59	FE 459	305	414	FE 459 Z	263	357						
55	63	FE 463	348	472	FE 463 Z	300	407	FE 463 Z2 *	149	202	1 900	2.1654	2.4803
60	68	FE 468	405	550	FE 468 Z	349	474	FE 468 Z2	179	243	1 750	2.3622	2.6772
62	70	FE 470	429	583	FE 470 Z	370	502				1 700	2.4409	2.7559
65	73	FE 473	467	633	FE 473 Z	402	545				1 600	2.5590	2.8740
70	78	FE 478	532	722	FE 478 Z	458	622				1 500	2.7559	3.0709
80	88	FE 488	674	914	FE 488 Z	581	788				1 300	3.1496	3.4646

Maximum radial clearance pending application 0.04 mm. * Not a stock item, delivery on request.
Other sizes on request. 10 Nm ≈ 1 kpm, 10 N ≈ 1 kp – Dimensions subject to change!

RL 400

Mounting space

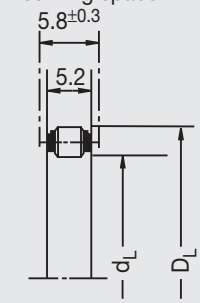

Tolerances of rollers and order example see page 13 paragraph 1.5.

Dimensions [mm]		RL 400	Load Capacities C dyn.		C_0 static		Idling speed Bearing n_{max} [RPM]		Dimensions [inch]	
d_L	D_L	Part number	[lb]	[N]	[lb]	[N]	oil	grease	d_L	D_L
2	10								.0787	.3937
4	12	RL 412	564	2 510	315	1 400	55 000	45 000	.1575	.4724
5	13								.1969	.5118
6	14								.2362	.5512
8	16								.3150	.6299
14	22	RL 422	1 115	4 960	787	3 500	25 000	19 000	.5512	.8661
15	23	RL 423	1 119	4 980	798	3 550	24 000	18 000	.5906	.9055
17	25	RL 425	1 328	5 910	1 023	4 550	21 000	17 000	.6693	.9843
19	27	RL 427	1 427	6 350	1 148	5 110	20 000	15 000	.7480	1.0630
20	28	RL 428	1 425	6 340	1 160	5 160	19 000	15 000	.7874	1.1024
22	30	RL 430	1 515	6 740	1 283	5 710	17 000	14 000	.8661	1.1811
24	32	RL 432	1 508	6 710	1 301	5 790	16 000	13 000	.9449	1.2598
25	33								.9483	1.2992
27	35								1.0630	1.3780
29	37	RL 437	1 663	7 400	1 555	6 920	14 000	11 000	1.1417	1.4567
30	38	RL 438	1 659	7 380	1 562	6 950	13 000	10 000	1.1811	1.4960
34	42	RL 442	1 890	8 410	1 924	8 560	12 000	9 000	1.3386	1.6535
35	43	RL 443	1 883	8 380	1 930	8 590	12 000	9 000	1.3780	1.6929
40	48	RL 448	2 164	9 630	2 416	10 750	10 000	8 000	1.5748	1.8898
42	50								1.6535	1.9685
45	53	RL 453	2 126	9 460	2 441	10 860	9 000	7 000	1.7717	2.0866
50	58	RL 458	2 236	9 950	2 695	11 990	8 500	6 500	1.9685	2.2835
51	59	RL 459	2 373	10 560	2 933	13 050	8 000	6 500	2.0079	2.3228
55	63	RL 463	2 411	10 730	3 068	13 650	7 500	6 000	2.1654	2.4803
60	68								2.3622	2.6772
62	70	RL 470	2 627	11 690	3 566	15 870	7 000	5 000	2.4409	2.7559
65	73	RL 473	2 605	11 590	3 575	15 910	6 500	5 000	2.5590	2.8740
70	78	RL 478 *	2 566	11 420	3 591	15 980	6 000	4 700	2.7559	3.0709
80	88	RL 488 *	2 749	12 230	4 097	18 230	5 300	4 100	3.1496	3.4646

* Not a stock item, delivery on request.
Other sizes on request. 10 Nm ≈ 1 kpm, 10 N ≈ 1 kp – Dimensions subject to change!

www.bergab.ru Берг АБ bergab@ya.ru Тел. (495)-228-06-21, факс (495) 223-3071

GMN

FR 400

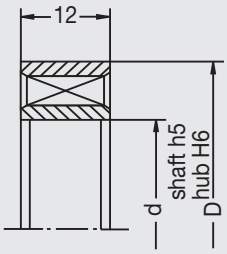

without bearing support

FP 400

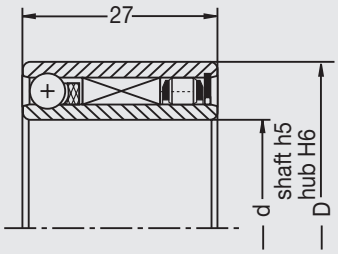

with bearing

FPD 400

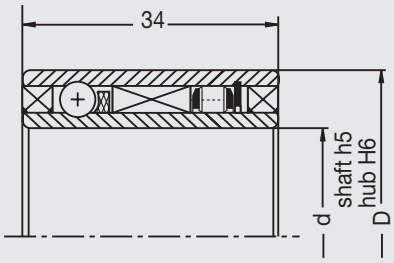

with bearing
and double seal

Dimensions [mm] [inch] d	D	FR 400	FP 400	FPD400	Torque M [ftlb]	[Nm]	Idling speed n_{max} [RPM]	Load Capacities [N] [lb] C dynamic Ball	Roller	C_0 static Ball	Roller
		Part number									
10	26	FR 422	FP 422		36	48	5 300	4 935	4 960	2 085	3 500
.3937	1.0236	FR 422 Z	FP 422 Z		32	42		1 109	1 115	469	787
15	31	FR 427	FP 427		59	80	4 400	6 080	6 350	2 785	5 110
.5906	1.2205	FR 427 Z	FP 427 Z		49	66		1 366	1 427	626	1 148
20	36	FR 432	FP 432		86	116	3 700	6 555	6 710	3 175	5 790
.7874	1.4173	FR 432 Z	FP 432 Z		71	97		1 473	1 508	714	1 301
25	41	FR 437	FP 437		117	158	3 200	7 325	7 400	3 870	6 920
.9843	1.6142	FR 437 Z	FP 437 Z		101	137		1 646	1 663	870	1 555
30	46	FR 442	FP 442	FPD 442	152	207	2 800	7 980	8 410	4 570	8 560
1.1811	1.8110	FR 442 Z	FP 442 Z	FPD 442 Z	131	178	* (1 500)	1 793	1 890	1 027	1 924
35	53	FR 448			201	272	2 500				
1.3780	2.0866	FR 448 Z			173	235					
40	58	FR 453	FP 453		246	333	2 200	8 690	9 460	5 640	10 860
1.5748	2.2835	FR 453 Z	FP 453 Z	FPD 453 Z	207	281	* (1 200)	1 953	2 126	1 267	2 441
50	68	FR 463	FP 463		348	472	1 900	9 295	10 730	6 700	13 650
1.9685	2.6772	FR 463 Z	FP 463 Z		300	407		2 089	2 411	1 506	3 068
60	78	FR 473	FP 473		467	633	1 600	9 535	11 590	7 420	15 910
2.3622	3.0709	FR 473 Z	FP 473 Z		402	545		2 143	2 605	1 667	3 575

The load capacities "C" and "C_o" are not valid for the FR 400 series!

Maximum radial clearance for the FR 400 series pending application 0.02 mm.
♦ Arrow on inner ring shows: idling direction of outer ring = locking direction of inner ring.
* Idling speed for series FPD

Other sizes on request.
Dimensions subject to change!
10 Nm ≈ 1 kpm; 10 N ≈ 1 kp

www.bergab.ru Берг АБ bergab@ya.ru Тел. (495)-228-06-21, факс (495) 223-3071

FRN 400*

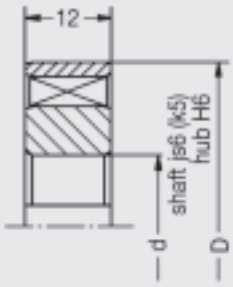

without bearing support

FN 400

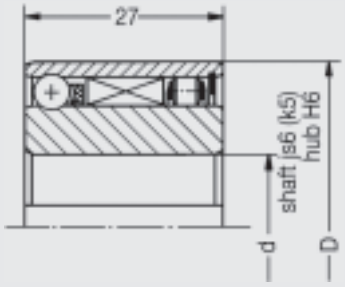

with bearing

FND 400

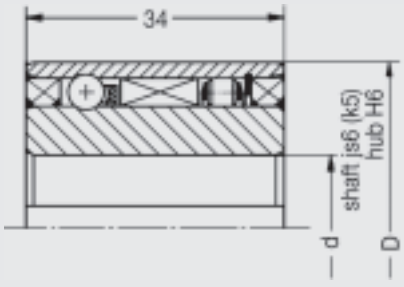

with bearing
and double seal

Dimensions [mm] [inch]		FRN 400+	FN 400	FND400♦	Torque M		Idling speed n_{max}	Load Capacities [N] [lb]			
								C dynamic		C_0 static	
d	D	Part number			[ftlb]	[Nm]	[RPM]	Ball	Roller	Ball	Roller
10	31	FRN 427			59	80	4 400				
.3937	1.2205	FRN 427 Z			49	66					
12	36	FRN 432			86	116	3 700				
.4724	1.4173	FRN 432 Z			71	97					
15	41	FRN 437	FN 437	FND 437	117	158	3 200	7 325	7 400	3 870	6 920
.5906	1.6142	FRN 437 Z	FN 437 Z	FND 437 Z	101	137	* (1 700)	1 646	1 663	870	1 555
20	46	FRN 442	FN 442	FND 442	152	207	2 800	7 980	8 410	4 570	8 560
.7874	1.8110	FRN 442 Z	FN 442 Z	FND 442 Z	131	178	* (1 500)	1 793	1 890	1 027	1 924
25	58	FRN 453	FN 453	FND 453	246	333	2 200	8 690	9 460	5 640	10 860
.9843	2.2835	FRN 453 Z	FN 453 Z	FND 453 Z	207	281	* (1 200)	1 953	2 126	1 267	2 441
30	64	FRN 459	FN 459	FND 459	305	414	2 000	8 805	10 560	6 010	13 050
1.1811	2.5197	FRN 459 Z	FN 459 Z	FND 459 Z	263	357	* (1 100)	1 979	2 373	1 351	2 933
35	68	FRN 463			348	472	1 900				
1.3780	2.6772	FRN 463 Z			300	407					
40	75	FRN 470	FN 470	FND 470	429	583	1 700	9 645	11 690	7 405	15 870
1.5748	2.9528	FRN 470 Z	FN 470 Z	FND 470 Z	370	502	* (1 000)	2 168	2 627	1 664	3 566
45	78	FRN 473			467	633	1 600				
1.7717	3.0709	FRN 473 Z			402	545					

The load capacities "C" and "C_0" are not valid for the FRN 400 series!

Maximum radial clearance for the FRN 400 series pending application 0.02 mm.
+ Torque capacity stated is valid for the clutch but not for the keyway!
Keyway specifications according to DIN 6885 Bl. 1 (P9) with back clearance (connecting dimensions on page 22).
♦ Arrow on inner ring shows: idling direction of outer ring = locking direction of inner ring
* Idling speed for series FND

Other sizes on request.
Dimensions subject to change.
10 Nm ≈ 1 kpm; 10 N ≈ 1 kp

www.bergab.ru Берг АБ bergab@ya.ru Тел. (495)-228-06-21, факс (495) 223-3071

GMN

FK 62 . .

FK 62 . .-2RS

FK 62 . .-RS

Engagement direction of inner ring
only important for type FK 62 . .-RS

direction of view

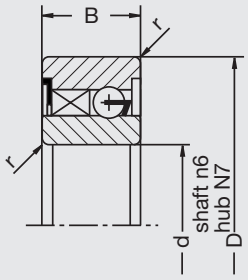

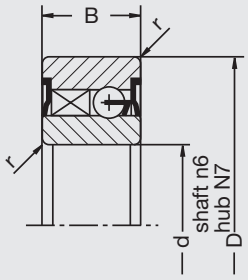

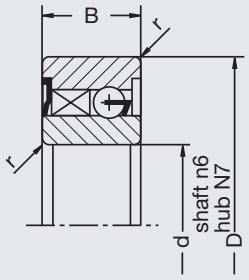

Dimensions in accordance with DIN 625, series 62, row 02

The “open” and “2RS” style are the standard program. With these types it is not necessary to specify clutch engagement direction. With the “RS” style it is necessary to specify clutch engagement direction as shown beside. The “RS” and “2RS” style are shipped grease lubricated for the life-time. Specification DIN 620 states that the radial clearance will be C2 to C5 after installation is completed. Should C2 be desired, it is necessary that the shaft diameter is manufactured at the high limit of the tolerance zone and the diameter of the housing bore is manufactured at the lowest limit.

with Keyway

FKN 62 . .

FKN 62 . .-2RS

FKN 62 . .-RS

Engagement direction of inner ring
only important for type FKN 62 . .-RS

direction of view

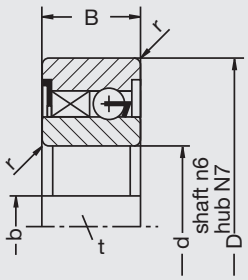

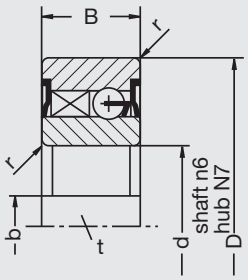

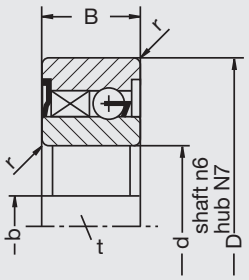

Dimensions in accordance with DIN 625, series 62, row 02

Dimensions [mm] [inch]						Part Number			M [Nm] [ftlb]	Idling speed n_{max} [RPM]	Load Capacities [N] [lb]	
d	D	B	r	b^{P9}	t						C dyn.	C_0 static
17 .6693	40 1.5748	12 .4724	1 .04	5 .1968	1.2 .0472	FK 6203 FKN 6203		FK 6203-RS FKN 6203-RS	40 29.5	3 700	6 555 1.473	3 175 0.714
20 .7874	47 1.8504	14 .5512	1.5 .06	6 .2362	1.6 .063	FK 6204 FKN 6204	FK 6204-2RS FKN 6204-2RS	FK 6204-RS FKN 6204-RS	55 40.5	3 200	7 325 1.646	3 870 0.870
25 .9843	52 2.0472	15 .5906	1.5 .06	8 .315	2 .0787	FK 6205 FKN 6205	FK 6205-2RS FKN 6205-2RS	FK 6205-RS FKN 6205-RS	93 69	2 800	7 980 1.793	4 570 1.027
30 1.1811	62 2.4409	16 .6299	1.5 .06	8 .315	2 .0787	FK 6206 FKN 6206	FK 6206-2RS FKN 6206-2RS	FK 6206-RS FKN 6206-RS	130 96	2 400	8 450 1.899	5 290 1.189
◆ 35 1.3780	72 2.8346	17 .6693	2.7 .10	10 .3937	3.3 .130	FK 6207 FKN 6207	FK 6207-2RS FKN 6207-2RS	FK 6207-RS FKN 6207-RS	202 149	1 900	9 295 2.089	6 700 1.506
◆ 40 1.3780	80 2.8346	18 .6693	2.7 .10	12 .3937	3.3 .130	FK 6208 FKN 6208	FK 6208-2RS FKN 6208-2RS	FK 6208-RS FKN 6208-RS	200 149	1 900	9 295 2.089	6 700 1.506
20 .7874	52 2.0472	15 .5906	1.5 .06				FK 6304-2RS		93 69	2 800	7 980 1.793	4 570 1.027

The torque capacieties for the FKN 62 . . series are only valid for the clutches, but not for the keyways!
Keyway specifications according to DIN 6885 Bl. 3 P9 with back clearance. (Conversion factors see page 20).
Arrow at inner ring shows: idling direction of outer ring = locking direction of inner ring.
◆ Sizes 6207, 6208: Housing tolerance N6; keyway depth according DIN 6885 Bl. 1

Other sizes on request.
Dimensions subject to change!
10 Nm ≈ 1 kpm; 10 N ≈ 1 kp

www.bergab.ru Берг АБ bergab@ya.ru Тел. (495)-228-06-21, факс (495) 223-3071

RA 400

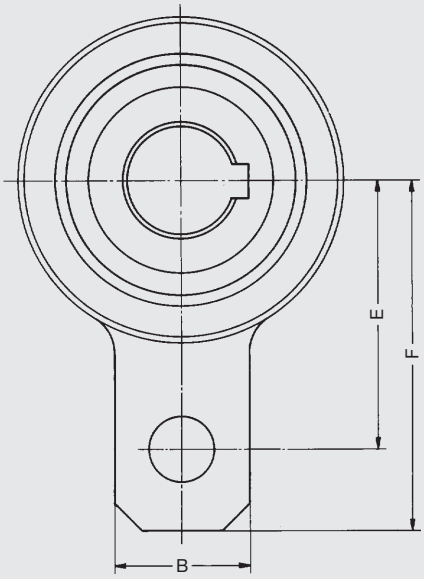

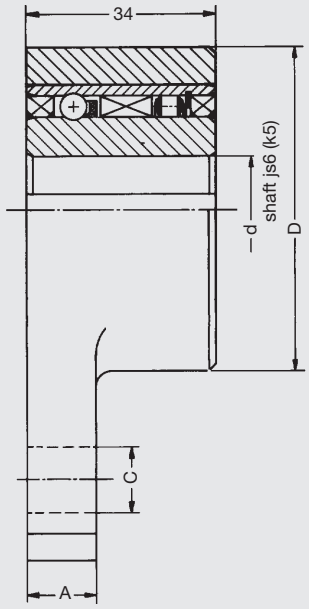

backstop direction at inner ring

direction of view

Backstops of series RA 400 can be used as indexing elements too.

Dimensions [mm] [inch]							Part Number	Torque M		Idling speed n_{max}	Load Capacities [N] [lb]			
											C dynamic		C_0 static	
d	D	A	B	C	E	F		[ftlb]	[Nm]	[RPM]	Balll	Roller	Ball	Roller
15	65	12	32	10	47	62	RA 437	117	158	1 700	7 325	7 400	3 870	6 920
.5906	2.5590	.4724	1.2598	.3937	1.8504	2.4409	RA 437 Z	101	137		1 640	1 663	870	1 555
20	75	16	36	12	54	72	RA 442	152	207	1 500	7 980	8 410	4 570	8 560
.7874	2.9528	.6299	1.4173	.4724	2.1260	2.8346	RA 442 Z	131	178		1 793	1 890	1 027	1 924
25	90	16	45	16	62	84	RA 453	246	333	1 200	8 690	9 460	5 640	10 860
.9843	3.5433	.6299	1.7717	.6299	2.4409	3.3070	RA 453 Z	207	281		1 953	2 126	1 267	2 441
30	100	16	50	16	68	92	RA 459	305	414	1 100	8 805	10 560	6 010	13 050
1.1811	3.9370	.6299	1.9685	.6299	2.6772	3.6220	RA 459 Z	263	357		1 979	2 373	1 351	2 933
40	110	20	50	20	85	112	RA 470	429	583	1 000	9 645	11 690	7 405	15 870
1.5748	4.3307	.7844	1.9685	.7874	3.3465	4.4494	RA 470 Z	370	502		2 168	2 627	1 664	3 566

Keyway specifications according to DIN 6885 Bl. 1 (P9) with back clearance. (connecting dimensions on page 20).
Hole C in momentum lever may be ordered threaded, with pivot stud or as a slotted hole at extra cost.
Arrow at inner ring shows locking direction of inner ring.

Other sizes on request.
Dimensions subject to change.
10 Nm ≈ 1 kpm; 10 N ≈ 1 kp

www.bergab.ru Берг АБ bergab@ya.ru Тел. (495)-228-06-21, факс (495) 223-3071

Shaft

Extract of DIN 7160

Shaft Tolerance in 0.001 mm = .000039 inch

Normal Size mm Above	3	6	10	18	30	50	80	120	180	250
To	6	10	18	30	50	80	120	180	250	315
Tolerance Zone h 5	0 – 5	0 – 6	0 – 8	0 – 9	0 – 11	0 – 13	0 – 15	0 – 18	0 – 20	0 – 23
h 6	0 – 8	0 – 9	0 – 11	0 – 13	0 – 16	0 – 19	0 – 22	0 – 25	0 – 29	0 – 32
js 6	+ 4 – 4	+ 4.5 – 4.5	+ 5.5 – 5.5	+ 6.5 – 6.5	+ 8 – 8	+ 9.5 – 9.5	+ 11 – 11	+ 12.5 – 12.5	+ 14.5 – 14.5	+ 16 – 16
js 7	+ 6 – 6	+ 7.5 – 7,5	+ 9 – 9	+ 10.5 – 10.5	+ 12.5 – 12.5	+ 15 – 15	+ 17.5 – 17.5	+ 20 – 20	+ 23 – 23	+ 26 – 26
k 5	+ 6 + 1	+ 7 + 1	+ 9 + 1	+ 11 + 2	+ 13 + 2	+ 15 + 2	+ 18 + 3	+ 21 + 3	+ 24 + 4	+ 27 + 4
k 6	+ 9 + 1	+ 10 + 1	+ 12 + 1	+ 15 + 2	+ 18 + 2	+ 21 + 2	+ 25 + 3	+ 28 + 3	+ 33 + 4	+ 36 + 4
n 6	+ 16 + 8	+ 19 + 10	+ 23 + 12	+ 28 + 15	+ 33 + 17	+ 39 + 20	+ 45 + 23	+ 52 + 27	+ 60 + 31	+ 66 + 34
n 7	+ 20 + 8	+ 25 + 10	+ 30 + 12	+ 36 + 15	+ 42 + 17	+ 50 + 20	+ 58 + 23	+ 67 + 27	+ 77 + 31	+ 86 + 34

Housing

Extract of DIN 7161

Housing Tolerance in 0.001 mm = .000039 inch

Normal Size mm Above	3	6	10	18	30	50	80	120	180	250
To	6	10	18	30	50	80	120	180	250	315
Tolerance Zone H 6	+ 8 0	+ 9 0	+ 11 0	+ 13 0	+ 16 0	+ 19 0	+ 22 0	+ 25 0	+ 29 0	+ 32 0
N 6	– 5 – 13	– 7 – 16	– 9 – 20	– 11 – 24	– 12 – 28	– 14 – 33	– 16 – 38	– 20 – 45	– 22 – 51	– 25 – 57
N 7	– 4 – 16	– 4 – 19	– 5 – 23	– 7 – 28	– 8 – 33	– 9 – 39	– 10 – 45	– 12 – 52	– 14 – 60	– 14 – 66

Keyway and Key

Extract of DIN 6885 Bl. 1

Keyway Tolerance in 0.001 mm = .000039 inch

Normal Size mm Above	8	10	12	17	22	30	38	44	50	58	65	75	85	95	110
To	10	12	17	22	30	38	44	50	58	65	75	85	95	110	130
Keysize (Width x Height)	3x3	4x4	5x5	6x6	8x7	10x8	12x8	14x9	16x10	18x11	20x12	22x14	25x14	28x16	32x18
Tolerance Zone P9 for keywey width	– 6 – 31	– 12 – 42			– 15 – 51		– 18 – 61				– 22 – 74				– 26 – 88
Depth of Keyway (shaft)	1.8	2.5	3	3.5	4	5	5	5.5	6	7	7.5	9	9	10	11
Tolerance	+ 100				+ 200										
Depth of Keyway (hub)	1.4	1.8	2.3	2.8	3.3	3.3	3.3	3.8	4.3	4.4	4.9	5.4	5.4	6.4	7.4
Tolerance	+ 100				+ 200										

Keyway and Key

Extract of DIN 6885 Bl. 3

Keyway Tolerance in 0.001 mm = .000039 inch

Normal Size mm Above	8	10	12	17	22	30	38	44	50	58	65	75	85	95	110
To	10	12	17	22	30	38	44	50	58	65	75	85	95	110	130
Keysize (Width x Height)			5x3	6x4	8x5	10x6	12x6	14x6	16x7	18x7	20x8	22x9	25x9	28x10	32x11
Tolerance Zone P9 for keywey width		– 12 – 42			– 15 – 51		– 18 – 61				– 22 – 74				– 26 – 88
Depth of Keyway (shaft)			1.9	2.5	3.1	3.7	3.9	4	4.7	4.8	5.4	6	6.2	6.9	7.6
Tolerance	+ 100				+ 200										
Depth of Keyway (hub)			1.2	1.6	2	2.4	2.2	2.1	2.4	2.3	2.7	3.1	2.9	3.2	3.5
Tolerance	+ 100											+ 200			

www.bergab.ru Берг АБ bergab@ya.ru Тел. (495)-228-06-21, факс (495) 223-3071

GMN Freewheel-Clutches
Series 8000

www.bergab.ru Берг АБ bergab@ya.ru Тел. (495)-228-06-21, факс (495) 223-3071

Introduction

The sprag-type freewheel clutches of series 8000 are based on a newly developed sprag with a nominal height of 8.33 mm ($^{21}/_{64}$ in). For shaft sizes of 38 to 150 mm or corresponding inch sizes this series offers alternative options or additional solutions for our famous series FE 400. Similar to FE 400 the new 8000 series provides very high torque capacity in relation to the required mounting space due to the large quantity of sprags. The newly designed clamping curve offers smooth and reliable torque pick up, which guarantees optimum performance for any freewheel clutch application such as indexing, overrunning or backstopping.
The diameter range mentioned above does not show the limits for the usage of this series. For special requirements of our customers we will be pleased to develop and offer new types below or above the existing standard programme.
We offer clutches of the 8000 series in four different widths: 13, 16, 19, 25 mm. The partnumber shows this dimension. The standard does not incorporate all widths for any diameter right now, but missing combinations will be realised upon requirement. The two or three last digits of the part number show the closest full shaft diameter of the metric conversion of the basically inch size of the metric conversion of the basically inch size of the shaft. e.g. FE 80**72** for 72.21 mm = 2 $^{27}/_{32}$ in. Special clutches could be designed for exact pure metric shafts **or** housings (just one of them at a time).

Mounting Instructions

The race ways the series 8000 insert clutches should run on must be hardened and ground. When surface hardening is used, the minimum hardening depth (Eht) at full torque must be 1.3 mm. Lower torque requirements allow lower depths.
The tolerances for the mating parts of series 8000 have not to be as sofisticated as with series 400 due to the larger size of the sprags and the different shape of the clamping curve.

Mounting fits:
(only series 8000)

Shaft:	d_L	= h6
Housing:	D_L	= H6
Hardness:	HRC	= 60^{+4}
Hardening Depth:	Eht	≥ 1.3 mm
Surface Finish:	R_Z	≤ 1.6 µm
Excentricity:	e	≤ 0.09 mm

(coaxiality of inner and outer race way)

Axial limitation for the insert clutch will be necessary and can be arranged by a shoulder, a washer or snapring (round edge towards the clutch). For ease of mounting we recommend chamfered shafts and housings.

Speed Limits

When torque is transmitted the sprags are in a fixed position between inner- and outer race. Under these conditons – theoretically – there is no speed limit. In backstopping and overrunning applications the influence of centrifugal forces has to be considered.

Tests showed that with oil lubrication series 8000 sprags surf on a hydrodynamic lubricating film under constant conditions (v = const.) with rotating shaft. The clutch itself turns very slowly under these conditions and so centrifugal forces do not become effective. The same situation could be expected with grease lubrication at a slightly higher speed level.

Due to the idling behaviour of our sprags of series 8000 there would be no need for sprags lifting off by centrifugal force or for dual cages or cages fix by clips or springs.

The rotating speed of the clutch itself depends on size, viscosity and temperature. With a hydrodynamic lubricating film only minimal wear could be expected.

Please note that in indexing applications due to alternating conditions a hydrodynamic lubricating film cannot be created. Please contact our technical staff for some advise if this kind of applications should arise.

www.bergab.ru Берг АБ bergab@ya.ru Тел. (495)-228-06-21, факс (495) 223-3071

FE 8000

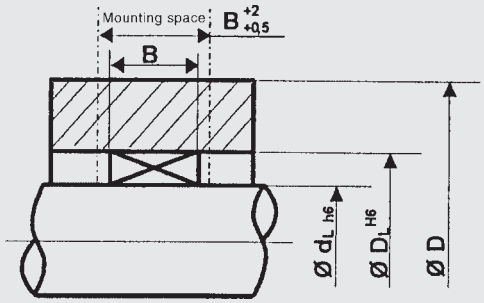

Dimensions [mm]			Part number	Torque M [Nm]	[ft lb]	Dimensions [in]		
d_L	D_L	B				d_L	D_L	B
38,09	54,75	13	FE 8038 Z 13	333	245	1.4996	2.1555	0.5118
		16	FE 8038 Z 16	479	353			0.6299
		19	FE 8038 Z 19	627	462			0.7480
40,00	56,66	13	FE 8040 Z 13	361	266	1.5748	2.2307	0.5118
		16	FE 8040 Z 16	517	381			0.6299
		19	FE 8040 Z 19	677	499			0.7480
44,45	61,11	13	FE 8044 Z 13	427	315	1.7500	2.4059	0.5118
		16	FE 8044 Z 16	614	453			0.6299
		19	FE 8044 Z 19	803	592			0.7480
49,72	66,38	13	FE 8049 Z 13	515	380	1.9574	2.6134	0.5118
		16	FE 8049 Z 16	741	546			0.6299
		19	FE 8049 Z 19	970	715			0.7480
54,76	71,42	13	FE 8054 Z 13	606	447	2.1559	2.8118	0.5118
		16	FE 8054 Z 16	874	644			0.6299
		19	FE 8054 Z 19	1140	840			0.7480
		25	FE 8054 Z 25	1682	1240			0.9843
58,00	74,66	19	FE 8058 Z 19	1260	929	2.2835	2.9394	0.7480
68,00	84,66	16	FE 8068 Z 16	1266	933	2.6772	3.3331	0.6299
72,21	88,87	13	FE 8072 Z 13	977	720	2.8429	3.4988	0.5118
		16	FE 8072 Z 16	1411	1040			0.6299
		19	FE 8072 Z 19	1845	1360			0.7480
		25	FE 8072 Z 25	2715	2001			0.9843
79,69	96,36	25	FE 8079 Z 25	2619	1930	3.1374	3.7937	0.9843
83,34	100,00	25	FE 8083 Z 25	3407	2511	3.2811	3.9370	0.9843
93,34	110,00	19	FE 8093 Z 19	2907	2143	3.6748	4.3307	0.7480
103,23	119,89	16	FE 8103 Z 16	2674	1971	4.0642	4.7201	0.6299
		19	FE 8103 Z 19	3322	2449			0.7480
		25	FE 8103 Z 25	4600	3391			0.9843
123,34	140,00	25	FES 8123 Z 25	5965	4397	4.8559	5.5118	0.9843
123,88	140,54	25	FE 8123 Z 25	5990	4415	4.8772	5.5331	0.9843
126,22	142,88	25	FE 8126 Z 25	5998	4421	4.9693	5.6252	0.9843
129,39	146,05	25	FE 8129 Z 25	6244	4602	5.0941	5.7500	0.9843
140,00	156,66	25	FE 8140 Z 25	6686	4928	5.5118	6.1677	0.9843
150,00	166,66	25	FE 8150 Z 25	7448	5490	5.9055	6.5614	0.9843

* The nominal torque is based on the conditions for torque determination on pages 7 and 8.

www.bergab.ru Берг АБ bergab@ya.ru Тел. (495)-228-06-21, факс (495) 223-3071

Proper lubrication with only qualified lubricants is the prerequisite for achievement of highest efficiency of our high quality clutches.
Only with use of oil or grease lubricants as specified in Tables 1 to 3 GMN will warrant their freewheel-clutches and their trouble free function.

GMN will supply on request, factory lubricant specifications for your specific operating temperature range.

Please consult with our technical staff if operating temperatures are in the upper or lower temperature tolerance range.

Whenever possible, use only oil or oil mist lubrication rather than grease lubrication.
For oilmist lubrication – please use oils as per table 1 e.g. HM 10 or HM 32.

Oil

Table 1	Operating Temperature Range at GMN Clutch		
	– 15 °C to + 30 °C + 5 °F to + 86 °F	15 °C to 90 °C 59 °F to 194 °F	60 °C to 120 °C 140 °F to 248 °F
Oil Type	Hydraulic Oil HM 10	Hydraulic Oil HM 32	Hydraulic Oil HM 100

Table 2	Operating Temperature Range at GMN Clutch		
	– 15 °C to + 30 °C + 5 °F to + 86 °F	15 °C to 90 °C 59 °F to 194 °F	60 °C to 120 °C 140 °F to 248 °F
Oil Type	–	HD-Motor Oil SAE 10 W	HD Motor Oil SAE 30
		ATF DEXRON II D or III	

Oil lubricants described in Table 2 are from the automotive sector. These lubricants can easily be obtained at automotive supply outlets and are excellent for the lubrication of our freewheel-clutches.

Lubricant qualification:
HD-Motor Oil SAE 10 W or SAE 30 is equal to “API-Service SF/CC” and “MIL-L 46152 B”.

Viscosity-Temperature Diagram for GMN Oil

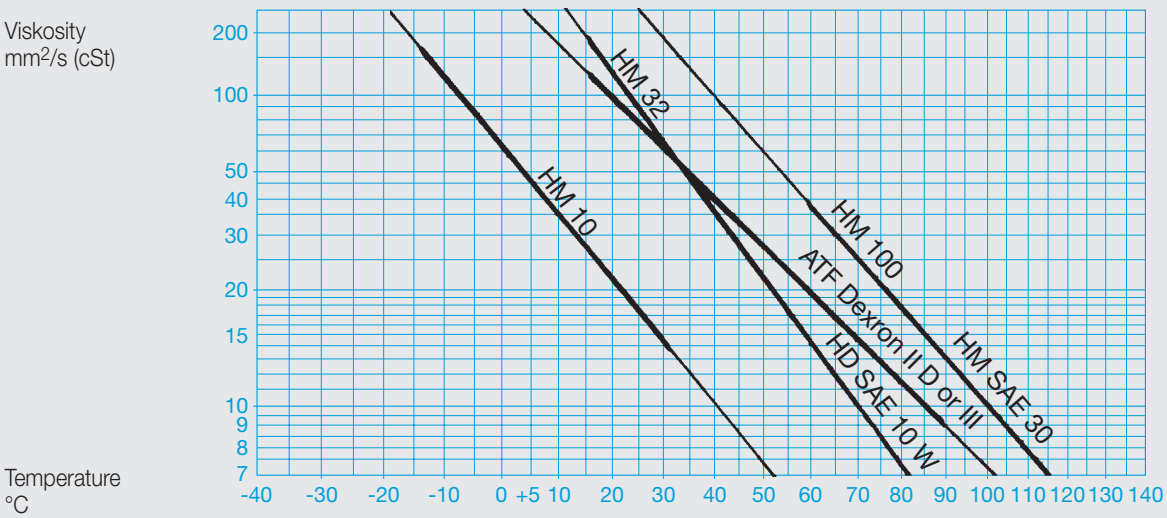

www.bergab.ru Берг АБ bergab@ya.ru Тел. (495)-228-06-21, факс (495) 223-3071

Important: Oils shown in table 1 and table 2 are only to be mixed with oils of the same qualification. That means ATF oil with ATF oil. HD-motor oil with HD-motor oil, hydraulic oil with hydraulic oil; but not ATF oil with motor oil or hydraulic oil etc.

If there is any change of oil from one qualification to the other it is absolutely necessary to clean the freewheel-clutch and mating parts with cleaning or test benzine. Never use trichloroethylene or perchlorethylene.

The oil level should be in relation to the size of the freewheel-clutch. In normal installation position, not operating, one half of the clutch should be submerged in oil.

At high values of indexing frequency or idling speed the amount of oil should be reduced. Just one third of the clutch should be submerged.

Our double sealed freewheel-clutches (series FND and FPD) are filled with an oil for operating temperature range 15 °C to 90 °C if not specially ordered.

For oil mist lubrication systems GMN recommends ample clean oil, free of moisture, be sprayed directly onto clutches.
Open or unsealed housings should be inspected frequently – at least dayly – for proper lubrication level. The amount of the refill depends on the specific design, the clutch is installed in and on its size.

Grease

Greases from different manufactures may not be compatible. Consult with GMN for proper lubrication recommendations

There is no universal grease for all service and operating conditions. Table 3 below lists suitable grease types and characteristics for GMN freewheel-clutches.

Table 3 shows a selection of the favoured greases and their specifications. The greases belong to the following consistance classes as per german standards DIN 51818: NLGI 2 (except Klüber Bio BM 72-501 – NLGI 1).
For regular working conditions the first two grease types are the perfect choice, as the use of Klüber Bio HB 72-102 is recommended for very special conditions.

It is very important to take care for the right amount and proper distribution of the grease. We recommend to fill about 60 % of the free space inside the clutch with grease by using a detergent for getting the grease equally distributed.

Table 3

Producer	Grease	Saponification	Oilbase	Operating Temperature at GMN Freewheel Clutches	Characteristics
Klüber Lubrication	ISOFLEX LDS 18 Special A	Lithium	Ester/ Mineral	– 30 °C…+130 °C – 22 °F …+266 °F	Deep temperature and longterm grease with high resistance to aging and corrosion.
Klüber Lubrication	Klüberbio BM 72-501	Polyurea	Ester	– 20 °C…+120 °C – 4 °F …+248 °F	Biological grease especially for overrunning and backstopping.
Klüber Lubrication	Klüberbio HB 72-102	Polyurea	Ester	– 40 °C…+180 °C – 40 °F …+356 °F	Full-Synthetic grease especially for overrunning and backstopping.

GMN only uses ball and roller bearing grease which is continually monitored for maximum quality and maximum clutch life.

GMN can not endorse or guarantee the quality of lubricants, purchased by their customers to be used with GMN clutches.

Sealed ball bearing clutches “RS” and “2RS” are shipped grease lubricated with grease type Isoflex LDS 18 Special A, if not specially ordered.

www.bergab.ru Берг АБ bergab@ya.ru Тел. (495)-228-06-21, факс (495) 223-3071

Mounting Series 400 and Series 8000

For easy and safe installation, freewheel-clutches are delivered on hard paper tubes. Only clutches of model FE 400 are surrounded with colored rubber rings, keeping the sprags in a disengaged position, so clutches can be mounted easily. After removal of rubber ring the sprags will be engaged immediately to be ready for working.

Color of rubber ring for engagement direction:
right = **r**ed
left = **l**ight green or transparent

Mounting

FE 400

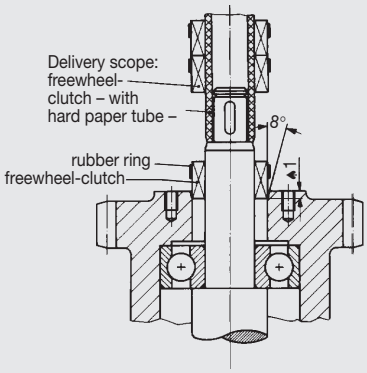

FE 400 installation recommendations for large quantities.

◀◀ Push freewheel-clutch off of the paper tube over the shaft, into the housing. After removal of the rubber ring, push freewheel-clutch into final position.

In the event that the insertion of the ▶▶ freewheel-clutch from the paper tube is difficult due to larger depth, use an adapter sleeve for ease of mounting.

FE 400

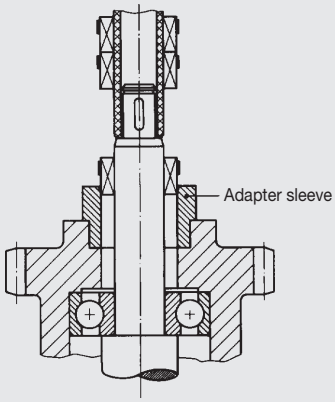

Place freewheel-clutch in the housing and secure (retainer).
Insert shaft with a turning and pushing motion.

FE 400 Z/Z2 / FE 8000

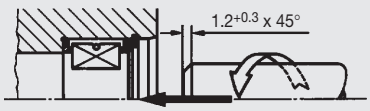

In the event that the shaft and outer part can not be chamfered, place freewheel-clutch halfway on the shaft. This causes the sprags to tilt and reduces the diameter in relation to the size of the clutch frame. Now push shaft with the freewheel-clutch in place.
This installation method is only possible with model FE 400 Z and FE 8000.

FE 400 Z / FE 8000

Freewheel-clutches model FE 400 S with drag cage should have side support washers, sleeve, or shoulder flange. There should be no recess for a retaining ring on the mounting side.

FE 400 S

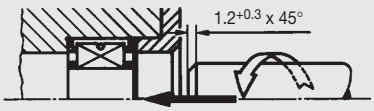

Freewheel-clutches “FE 400 Z/Z2” and “FE 8000” can be installed for left or right engagement. When ordering, specification for left or right engagement is not necessary.

www.bergab.ru Берг АБ bergab@ya.ru Тел. (495)-228-06-21, факс (495) 223-3071

With this catalog we showed to you the most important facts about design, function and application of GMN Sprag-Type Freewheel-Clutches Series 400 and 8000.

It was our intention to give to you some guidelines for the right choice and the correct use of our clutches.

If you are in doubt, whether you have chosen the right clutch element or if you have some additional questions for solving your clutch problem, please do not hesitate to contact our technical staff. We will answer your questions and will discuss your problems with you without any obligation and free of any charges.

Please trust in our experience, because we are offering solutions for clutch problems for many, many years and our philosophy is not only to sell clutches but to satisfy our customers by offering the best solution from the technical side as well as pricewise.

If you have a certain clutch problem, please send as much information as possible, to enable us to find the best product for your application.

Roller-Ramp-Clutches

In addition to our Sprag-Type-Clutches of series 400 and 8000 GMN offers a large variety of Roller-Ramp-Clutches. Below you will find a list of interchanges with other brands.
For more detailed information ask for catalog 9082 E.

GMN	Other brands		
VS	NSS	AS	BSS
VSNU	NFS	ASNU	BFS
VF	NF	AE	BNF
VGF	NFR	ANG/ANR	BNFR
VGV	RS/BW	AV	RS/BF
VGL (P)	GFR N	AL (P)	GFRS (N)
VGL...F2-D2 VGL...F4-D2 VGL...F5-D2 VGL...F5-D3 VGL...KS-D2 VGL...F7-D7	GFR...F1-F2 GFR...F2-F7 GFR...F2-F3 GFR...F3-F4 GFR...ES-F2 GFRN..F5-F6	AL...F2-D2 AL...F4-D2 AL...F5-D2 AL...F5-D3 AL. . KMS-D2 ALP..F7-D7	GFRS..D1-D2 GFRS..D2-D7 GFRS..D2-D3 GFRS..D3-D4 GFRSN.D5-D6

Conversion Factors

1 mm = 0.1	cm	1 g = 0.001	kg	1 Nm = 0.1019	kpm
1 mm = 0.00328	ft	1 g = 0.03527	oz	1 Nm = 0.737	ft lb
1 mm = 0.03937	in	1 g = 0.002205	lb	1 Nm = 141.5	oz in
1 in = 25.4	mm	1 oz = 28.35	g	1 oz in = 0.00707	Nm
1 ft = 304.8	mm	1 lb = 453.6	g	1 ft lb = 1.3567	Nm
1 ft = 12	in	1 lb = 16	oz	1 ft lb = 192	oz in
		1 kW = 1.34	hp	1 hp = 0.746	kW

Please contact:

Paul Müller Industrie GmbH & Co. KG
Äußere Bayreuther Straße 230
D-90411 Nürnberg
Bereich Antriebstechnik
Phone (0911) 5691-414/-417
Telefax (0911) 5691-569
e-mail vertrieb.at@gmn.de
Internet http://www.gmn.de

Our local representative

The new manufacturing programm

- Spindles
- High-precision ball bearings
- Clutches / Seals

www.bergab.ru Берг АБ bergab@ya.ru Тел. (495)-228-06-21, факс (495) 223-3071

GMN

GMN

GMN Paul Müller Industrie
GmbH & Co. KG

Driving Technology

Äußere Bayreuther Straße 230
D-90411 Nürnberg
Phone: (09 11) 56 91-417
Telefax: (09 11) 56 91-569
e-mail: vertrieb.at@gmn.de
Internet: http://www.gmn.de

The contents of this catalog have been checked very carefully. It may not result in any warranty, if we missed any mistake.
Changes based on technical progress reserved.
Printed in Germany 9050 06/04 E

www.bergab.ru Берг АБ bergab@ya.ru Тел. (495)-228-06-21, факс (495) 223-3071