rgab.ru Берг АБ bergab@ya.ru Тел. (495)-228-06-21, факс (495) 2

SEALPOOL HYDRAULIC SEALS

rgab.ru Берг АБ bergab@ya.ru Тел. (495)-228-06-21, факс (495) 2

rgab.ru Берг АБ bergab@ya.ru Тел. (495)-228-06-21, факс (495) 2

® SKF, CR and SEALPOOL are registered trademarks of the SKF Group.

© Copyright SKF 2003
The contents of this catalogue are the copyright of the publisher and may not be reproduced (even extracts) unless permission is granted. Every care has been taken to ensure the accuracy of the information contained in this catalogue but no liability can be accepted for any loss or damage whether direct, indirect or consequential arising out of the use of the information contained herein.

Catalogue **5397 E** • December 2003

Printed in Denmark on environmentally friendly, chlorine-free paper (G-print) by Scanprint as.

rgab.ru Берг АБ bergab@ya.ru Тел. (495)-228-06-21, факс (495) 2

rgab.ru Берг АБ bergab@ya.ru Тел. (495)-228-06-21, факс (495) 22

Seal designs 13 1

Piston seals 19 2

Rod seals 91 3

Wiper seals 161 4

Guide rings and guide strips 211 5

Spring activated seals 245 6

O-rings 253 7

Back-up rings 315 8

Product index 326
SI conversion table 327 9

rgab.ru Берг АБ bergab@ya.ru Тел. (495)-228-06-21, факс (495) 22

rgab.ru Берг АБ bergab@ya.ru Тел. (495)-228-06-21, факс (495) 2

The SKF brand now stands for more than ever before, and means more to you as a valued customer.

While SKF maintains its leadership as the hallmark of quality bearings throughout the world, new dimensions in technical advances, product support and services have evolved SKF into a truly solutions-oriented supplier, creating greater value for customers.

These solutions encompass ways to bring greater productivity to customers, not only with breakthrough application-specific products, but also through leading-edge design simulation tools and consultancy services, plant asset efficiency maintenance programs, and the industry's most advanced supply management techniques.

The SKF brand still stands for the very best in rolling bearings, but it now stands for much more.

SKF – The knowledge engineering company

rgab.ru Берг АБ bergab@ya.ru Тел. (495)-228-06-21, факс (495) 2

rgab.ru Берг АБ bergab@ya.ru Тел. (495)-228-06-21, факс (495) 22

General

Foreword 5

SKF – The knowledge engineering company 6

Contents 10

rgab.ru Берг АБ bergab@ya.ru Тел. (495)-228-06-21, факс (495) 22

rgab.ru Берг АБ bergab@ya.ru Тел. (495)-228-06-21, факс (495) 2

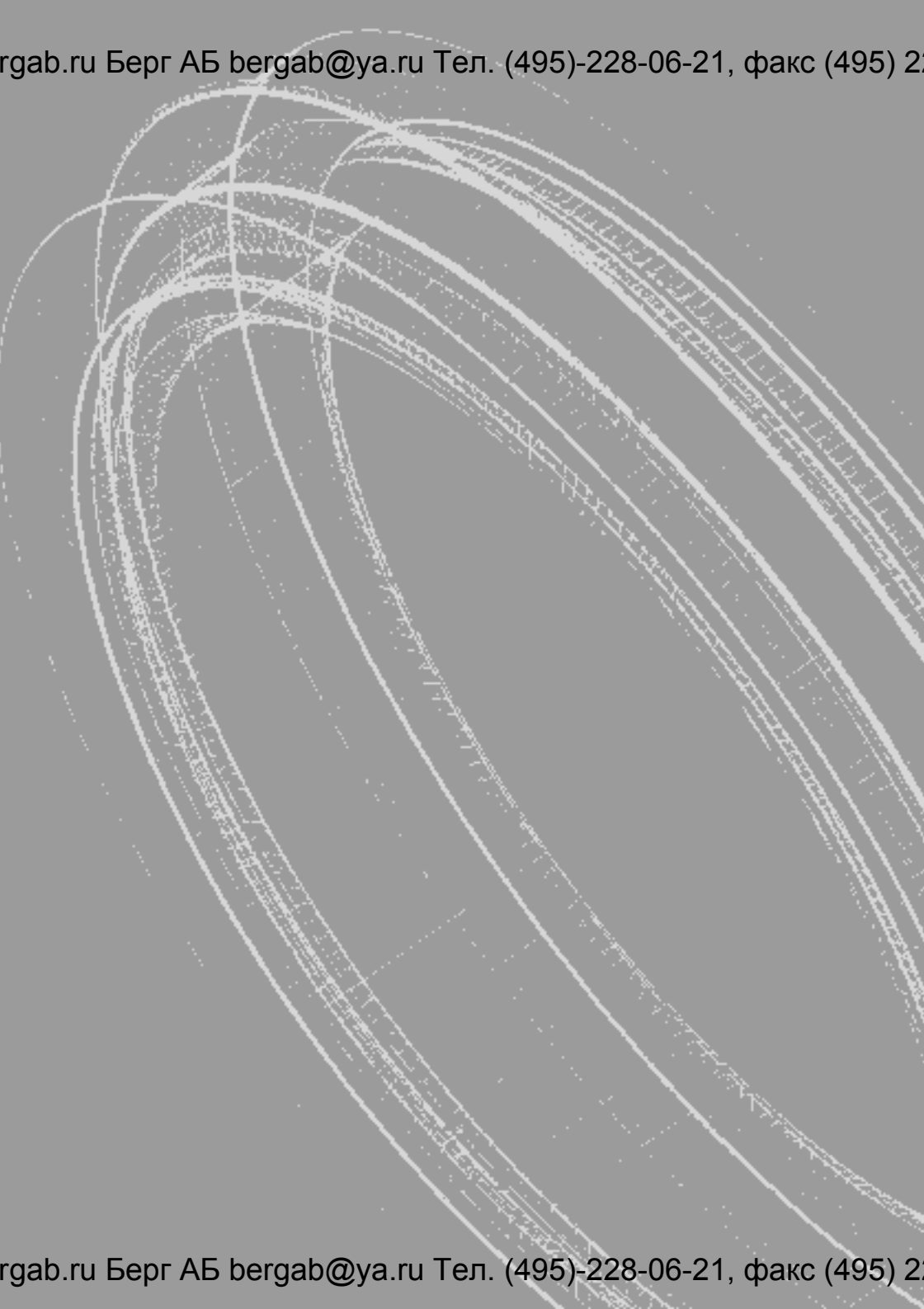

rgab.ru Берг АБ bergab@ya.ru Тел. (495)-228-06-21, факс (495) 2

rgab.ru Берг АБ bergab@ya.ru Тел. (495)-228-06-21, факс (495) 2

Foreword

The first edition of the "SEALPOOL Hydraulic Seals" catalogue (SKF Publication 5181 E) was published in 2001. Widely used and professionally accepted, the catalogue has become an authoritative reference work.

To make this new edition (SKF Publication 5397 E) an even more comprehensive guide, numerous revisions, additions and enhancements have been made. One of the most important news items is the inclusion of a section on O-rings.

Though the aim of this catalogue is to cover a very wide seal range, it is still only a selection of our complete range of SEALPOOL Hydraulic Seals. If you need additional information, do not hesitate to contact us.

How to read this catalogue

In order to emphasize the importance of studying the service conditions of each application before selecting a sealing solution, this catalogue outlines the most important factors to consider. These are found in the "Seal designs" chapter.

Hydraulic seals are divided into several groups according to function, such as piston seals and rod seals, each of which includes several types of seal to match a variety of operating requirements. Each seal design group has its own chapter, containing specific technical product data and detailed application information for the various seal types. The available range, specifying types, sizes, machining criteria and SKF product designations, can be found in the product tables.

The data in this catalogue relates to the state of development and production in early 2003. We reserve the right to make changes without prior notice.

The units used in this catalogue are in accordance with ISO (International Organization for Standardization) standard 1000:1992, and SI (Système International d'Unités). A conversion table can be found on **page 327**.

rgab.ru Берг АБ bergab@ya.ru Тел. (495)-228-06-21, факс (495) 2

rgab.ru Берг АБ bergab@ya.ru Тел. (495)-228-06-21, факс (495) 2

SKF – The knowledge engineering company

The business of the SKF Group consists of the design, manufacture and marketing of the world's leading brand of rolling bearings, with a global leadership position in complementary products such as hydraulic and radial shaft seals. SKF also holds an increasingly important position in the market for linear motion products, high precision aerospace bearings, machine tool spindles, plant maintenance services, and is an established producer of high-quality bearing steel.

The SKF Group maintains specialized business operations to meet the needs of the global marketplace. SKF supports specific market segments with ongoing research and development efforts that have led to a growing number of innovations, new standards and new products.

The Group has global ISO 14001 environmental certification. Individual divisions have been approved for quality certification in accordance with either ISO 9000 or QS 9000.

Some 80 manufacturing sites worldwide and sales companies in 70 countries make SKF a truly international corporation. In addition, our 7 000 distributor and dealer partners around the world, e-business marketplace and global distribution system, puts SKF close to customers for the supply of both products and services. In essence, SKF solutions are available wherever and whenever our customers need them. Overall, the SKF brand now stands for more than ever before. It stands for the knowledge engineering company ready to serve you with world-class product competencies, intellectual resources, and the vision to help you succeed.

rgab.ru Берг АБ bergab@ya.ru Тел. (495)-228-06-21, факс (495) 2

rgab.ru Берг АБ bergab@ya.ru Тел. (495)-228-06-21, факс (495) 2

Evolving by-wire technology
SKF has a unique expertise in fast-growing by-wire technology, from fly-by-wire, to drive-by-wire, to work-by-wire. SKF pioneered practical fly-by-wire technology and is a close working partner with all aerospace industry leaders. As an example, virtually all aircraft of the Airbus design use SKF by-wire systems for cockpit flight control.

SKF is also a leader in automotive drive-by-wire, having jointly developed the revolutionary Filo and Novanta concept cars which employ SKF mechatronics for steering and braking. Further by-wire development has led SKF to produce an all-electric forklift truck which uses mechatronics for all controls.

rgab.ru Берг АБ bergab@ya.ru Тел. (495)-228-06-21, факс (495) 2

rgab.ru Берг АБ bergab@ya.ru Тел. (495)-228-06-21, факс (495) 2

Delivering asset efficiency optimization
To optimize efficiency and boost productivity, many industrial facilities outsource some or all of their maintenance services to SKF, often with guaranteed performance contracts. Through the specialized capabilities of SKF Reliability Systems, SKF provides a comprehensive range of asset efficiency services, from maintenance strategies and engineering assistance, to operator-driven reliability and machine maintenance programs.

Planning for sustainable growth
By their very nature, bearings make a positive contribution to the natural environment, enabling machinery to operate more efficiently, consume less power, and require less lubrication. By raising the performance bar for our own products, SKF is enabling a new generation of high-efficiency products and equipment. With an eye to the future and the world we will leave to our children, SKF's global policies and manufacturing techniques are planned and implemented to help protect and preserve the earth's limited natural resources. We remain committed to sustainable, environmentally responsible growth.

Maintaining a 320 km/h R&D lab
In addition to SKF's renowned research and development facilities in Europe and the United States, Formula One car racing provides a unique environment for SKF to push the limits of bearing technology. For over 50 years, SKF products, engineering and knowledge have helped make Scuderia Ferrari a formidable force in F1 racing. (The average racing Ferrari utilizes more than 150 SKF components.) Lessons learned here are applied to the products we provide to automakers and the aftermarket worldwide.

rgab.ru Берг АБ bergab@ya.ru Тел. (495)-228-06-21, факс (495) 2

rgab.ru Берг АБ bergab@ya.ru Тел. (495)-228-06-21, факс (495) 2

Developing a cleaner cleaner
The electric motor and its bearings are the heart of many household appliances. SKF works closely with appliance manufacturers to improve their product's performance, cut costs, reduce weight, etc. A recent example produced a new generation of vacuum cleaners with substantially more suction. SKF's knowledge in small bearing technology is also applied to manufacturers of power tools and office equipment.

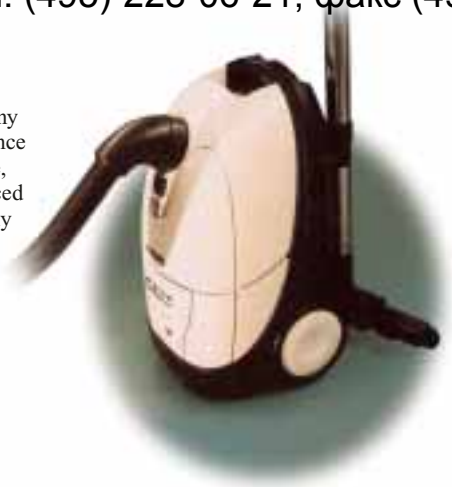

Creating a new "cold remedy"
In the frigid winters of northern China, sub-zero temperatures can cause rail car wheel assemblies and their bearings to seize due to lubrication starvation. SKF created a new family of synthetic lubricants formulated to retain their lubrication viscosity even at these extreme temperatures. SKF's knowledge of lubricants and friction are unmatched in the world.

Harnessing wind power
The growing industry of wind-generated electric power provides an environmentally compatible source of electricity. SKF is working closely with global industry leaders to develop efficient and trouble-free turbines, providing a wide range of large, highly specialized bearings and condition monitoring systems to extend equipment life in the extreme and often remote environments of wind farms.

rgab.ru Берг АБ bergab@ya.ru Тел. (495)-228-06-21, факс (495) 2

rgab.ru Берг АБ bergab@ya.ru Тел. (495)-228-06-21, факс (495) 2

Contents

Seal designs **13**
Seal designs 14
Selection of seals 14
Pressure 14
Temperature 15
Friction 15
Surface properties 15
Seal materials 16

Piston seals **19**
Piston seals 20
Sealing ability 20
Fixing the piston to the rod 21
Guiding of the piston in the cylinder tube 21
Single-acting piston seals 23
Double-acting piston seals 24
Double-acting compact piston seals 24
Tough operating conditions and large temperature variations 26
Double-acting polyurethane slide ring piston seals 28
Double-acting PTFE slide ring piston seals 28
Service conditions 30
Installation and assembly 36
Seal design and installation 40
Product tables
CUT 42
PEN 44
Piston seals series GHT 46
Slide ring seals series GH 50
Slide ring seals series GL 62
URG 70
Double-acting compact piston seals, series M 72
A 80
SM 81
MSS 82
SAARR 83
SA 84
SWRR 86
SAW 88

Rod seals **91**
Rod seals 92
Sealing ability 92
Dynamic sealing ability 92
Static sealing ability 92
Sealing between cylinder tube and cylinder head 92
Functions 93
U-ring seals of polyurethane materials . . 93
Compact seals of nitrile rubber 94
Slide ring seals of PTFE 95
Tandem sealing systems 96
Telescopic cylinders 97
Small spaces 98
Vibrations 98
Pressure 98
Back-up rings 99
Rod surfaces 100
Surface properties 100
Friction 102
Seal materials 102
Operating temperature 103
Installation and assembly 104
Seal design and installation 106
Product tables
SIL, TIL 108
Rod seals series G 110
SG 126
AG 129
SKY 130
UN 132
SI 136
TI, TILA 140
S 142
Rod seals series GL 144
CH 152
STR , back-up ring for rod seals 156
RI, retainer ring for rod seals 158

Wiper seals **161**
Wiper seals 162
Dynamic function 162
Static function 162
Metal reinforced wiper seals 163
Non-reinforced wiper seals 164
Double-acting wiper seals 165
Aggressive media 166
Piston wiper seals 166
Seal materials 166
Test results 166

rgab.ru Берг АБ bergab@ya.ru Тел. (495)-228-06-21, факс (495) 2

rgab.ru Берг АБ bergab@ya.ru Тел. (495)-228-06-21, факс (495) 2

Operating temperature 166
Module system 168
Assembly 168
Surface properties 170
Assembly into open housings 172
Assembly into closed housings 173
Product tables
PA 174
PAK 175
PAK .. L 176
PAD 177
GA 178
SCB 180
PWY 184
PWD 186
PWB 188
RSW 189
PO, PO2 190
SDR 194
SER 198
PW 202
DK 206
PPUA 207
PWF 208

Guide rings and guide strips 211
Guide rings and guide strips 212
Choice of material 212
Phenolic/fabric 213
Acetal resin 213
PTFE 214
The location of the guide 215
Calculation of the guide width 218
Choice of dimensions 220
Guide rings of phenolic/fabric 220
Guide rings of acetal resin 220
Guide strips of PTFE 220
Groove design and assembly 220
Groove edges 220
Guide ring material comparison 222
Guide rings of phenolic/fabric 222
Guide rings of acetal resin 223
Guide strips of PTFE 238
Calculation of the guide strip length 240
Type SB, SB/C guide strips for piston 241
Type SB, SB/C guide strips for rod 241
Product tables
RGR .. PF 224
RGR .. A 230
PGR .. PF 232
PGR .. A 236
SB, SB/C 242

Spring activated seals 245
Spring activated seals 246
Radial installation of SU seals 247
Axial installation of SU seals 248
Hardware design,
open and closed grooves 248
Selection table 248

O-rings 253
O-rings 254
General information 254
Designations 254
Surface requirements 255
Assembly lead-in chamfers 255
Groove edges 255
Tolerances 256
Material 256
Quality system 256
Swedish standard 258
Dynamic installation, radial squeeze . . 258
Static installation, radial squeeze 258
O-ring housing in cylinder bore 258
O-ring housing in rod 258
Static installation, axial squeeze 259
English-American standard 268
Dynamic installation, radial squeeze . . 268
Static installation, radial squeeze 268
O-ring housing in cylinder bore 268
O-ring housing in rod 268
Static installation, axial squeeze 269
Product tables 288

PTFE encapsulated O-rings, type ECOR . . 311
Structure 312
Function 312
Advantages 312
Designations 312
Standard sections 312
Groove design 312
Assembly of ECOR 313

Back-up rings 315
Back-up rings 316
Designations 318
Materials 318
Sizes and stock-keeping 319
Back-up rings of polyurethane 319
Back-up rings of PTFE 319
Production of new sizes 319
Product tables 320

Product index 326
SI conversion table 327

rgab.ru Берг АБ bergab@ya.ru Тел. (495)-228-06-21, факс (495) 2

rgab.ru Берг АБ bergab@ya.ru Тел. (495)-228-06-21, факс (495) 2

rgab.ru Берг АБ bergab@ya.ru Тел. (495)-228-06-21, факс (495) 2

rgab.ru Берг АБ bergab@ya.ru Тел. (495)-228-06-21, факс (495) 2

Seal designs

Seal designs **14**
Selection of seals 14
Pressure 14
Temperature 15
Friction 15
Surface properties 15
Seal materials 16

rgab.ru Берг АБ bergab@ya.ru Тел. (495)-228-06-21, факс (495) 2

rgab.ru Берг АБ bergab@ya.ru Тел. (495)-228-06-21, факс (495) 2

Seal designs

The seals in this catalogue are intended to be used in hydraulic cylinders with reciprocating movements, mainly in industrial applications. The main tasks of the seals are

- to retain lubricants,
- to exclude contaminants, and
- to maintain the hydraulic pressure.

Sealpool hydraulic seals are produced in a variety of designs and materials. The main groups are

- Piston seals (**page 19**)
- Rod seals (**page 91**)
- Wiper seals (**page 161**)
- Guide rings and guide strips (**page 211**)
- Spring activated seals (**page 245**)
- O-rings (**page 253**)
- Back-up rings (**page 315**)

Selection of seals

Seals are supposed to maintain a high sealing performance with a minimum of friction and wear during their expected service life, also under very unfavourable operating conditions. In order to meet these very varying demands, seals are produced in many designs and different materials. Since many factors affect each other and influence the selection of seals it is important to define the area of application of the cylinder, and make selection analyses with the support of carefully drawn-up requirement specifications.

The most important factors to take into consideration when selecting a seal are

- pressure
- temperature
- friction
- surface properties

Pressure

The pressure level, the duration of the pressure cycles and changes in the pressure direction very much affect the risk of the seal being damage by extrusion. The higher pressure, the higher demands on the other factors also affecting the seal function, e.g. temperature, speed, seal material and the clearance between piston and cylinder tube or the clearance between rod and cylinder head.

It is, however, also very important to consider the fact that it is more difficult for the seal to maintain its sealing properties at low pressure or in zero-pressure conditions. This applies specifically in extreme cold, when the sealing material is hard and less elastic, and the oil has a very high viscosity which makes it difficult to wipe off. A common characteristic of most types of seals is that the higher the pressure, the better they seal. The risk of the sealing properties being impaired at pressures up to 40 MPa is small, provided that

rgab.ru Берг АБ bergab@ya.ru Тел. (495)-228-06-21, факс (495) 2

rgab.ru Берг АБ bergab@ya.ru Тел. (495)-228-06-21, факс (495) 2

the surface of the cylinder tube or the rod are in good condition.

Temperature

Stating the highest and lowest operating temperatures for a seal of a particular type of material or, most common, combination of materials is very complicated since a number of factors affect each other. Please see **Diagram 5**, **page 35**, for piston seals and **Diagram 3**, **page 103**, for rod seals, providing general guidance regarding the operating temperature ranges for different types of regular design seals, and under otherwise normal operating conditions.

Friction

The friction between the seal and the counterface surface depends on a number of factors: surface roughness, surface characteristics, pressure, fluid, temperature, seal materials, type of seal and speed of movement.

Own laboratory tests show that the friction loss in tandem sealing systems is not higher than in single installations. The reason for this is that the primary seal is lubricated from the back by the oil that is gathered between the seals also when the rod moves towards the interior of the cylinder and the primary seals is under pressure. Further information on friction is provided in the specific sections for piston and rod seals.

Surface properties

Experience has shown that the surface properties of the cylinder tube and the rod have a great influence on the function and service life of the seal. The surface is usually defined by the surface roughness value µm R_a, i.e. the arithmetic mean deviation of the surface profile. This value does not, however, provide a complete scenario of how the surface can be expected to affect the seal. The reason for this is that two surfaces with the same value stated in µm R_a but with different surface profile characteristics can result in a varying degree of wear.

A surface with smooth profile characteristics provides a longer service life for the seal than a surface characterized by sharp profile details, but still with the same surface roughness value. A more important aspect is therefore the surface profile characteristics, or bearing capacity. The higher bearing capacity, the longer service life of the seal. **Table 1** on **page 17** shows the relation between different surface roughness values and the bearing capacity.

We recommend a surface roughness value for rod and cylinder tube surfaces working against seals of elastomeric materials of maximum 0,3 µm R_a and maximum 0,2 µm R_a for surfaces working against PTFE seals. In this recommendation the bearing capacity is taken into consideration and is described as a relation between R_p and R_z according to the below formula:

For surfaces against seals of elastomeric materials:

0,3 R_z 1,2/$R_{p\,max}$ 45% of R_z

For surfaces against PTFE seals:

0,2 R_z 1,2/$R_{p\,max}$ 45% of R_z

We recommend a surface roughness value for the seal housing groove of maximum 0,8 µm R_a and maximum 1,6 µm R_a for other machined surfaces.

rgab.ru Берг АБ bergab@ya.ru Тел. (495)-228-06-21, факс (495) 2

rgab.ru Берг АБ bergab@ya.ru Тел. (495)-228-06-21, факс (495) 2

Seal materials

The usual way of judging seal materials for hydraulic applications is to read the material specifications and try to compare specifications for various materials. This unfortunately leads to several pitfalls. Most specifications and test results can seldom be compared with one another if they have not been carried out in the same way and under the same conditions.

Many test results reproduce values based on test samples which have been manufactured according to particular specifications, and which deviate from those used in mass production. To avoid drawing the wrong conclusions, it is essential to take note of what the different specifications actually point out and refer to.

Because of costs and time pressure, test results often show values which have been recorded following short test periods. This of course provides a certain amount of information about the properties of the material, but it is considerably better to measure the changes in the properties of the material after a test period of 1 000 hours.

The properties which should initially be studied are those most important for the sealing function, i.e.:

- compression set,
- elasticity at low temperature (retraction test),
- change of hardness in oil, at e.g. 100 °C, and
- change of volume in oil, at e.g. 100 °C.

It is of course not only the material properties which determine the function of the seal. The design and construction of the seal are just as important, i.e. how the properties of the material can be optimally used for the task which the seal in question has to carry out. For more information regarding seal materials, please read under the different seal type sections in this catalogue including detailed descriptions on materials relevant for the seal type in question.

rgab.ru Берг АБ bergab@ya.ru Тел. (495)-228-06-21, факс (495) 2

rgab.ru Берг АБ bergab@ya.ru Тел. (495)-228-06-21, факс (495) 2

Table **1**

Surface properties Surface profile	Pt	$R_{z\,max}$	R_z	R_a	R_p	Mr 1 C 0,25	Mr 2 C 0,25	Bearing capacity graph (Abbott graph)
	–	–	–	µm	–	–	–	
	1	1	1	0,25	0,2	75 %	75 %	
	1	1	1	0,25	0,8	15 %	15 %	
	1	1	1	0,2	0,2	85 %	85 %	
	1	1	1	0,2	0,8	20 %	20 %	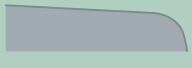
	1	1	0,4	0,08	0,15	88 %	88 %	
	1	1	0,4	0,08	0,85	7 %	7 %	
	1	1	1	0,2	0,5	25 %	25 %	
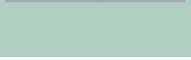	1	1	1	0,3	0,3	38 %	38 %	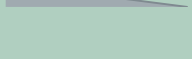
	1	0,5	0,4	0,1	0,2	85 %	17 %	

rgab.ru Берг АБ bergab@ya.ru Тел. (495)-228-06-21, факс (495) 2

rgab.ru Берг АБ bergab@ya.ru Тел. (495)-228-06-21, факс (495) 2

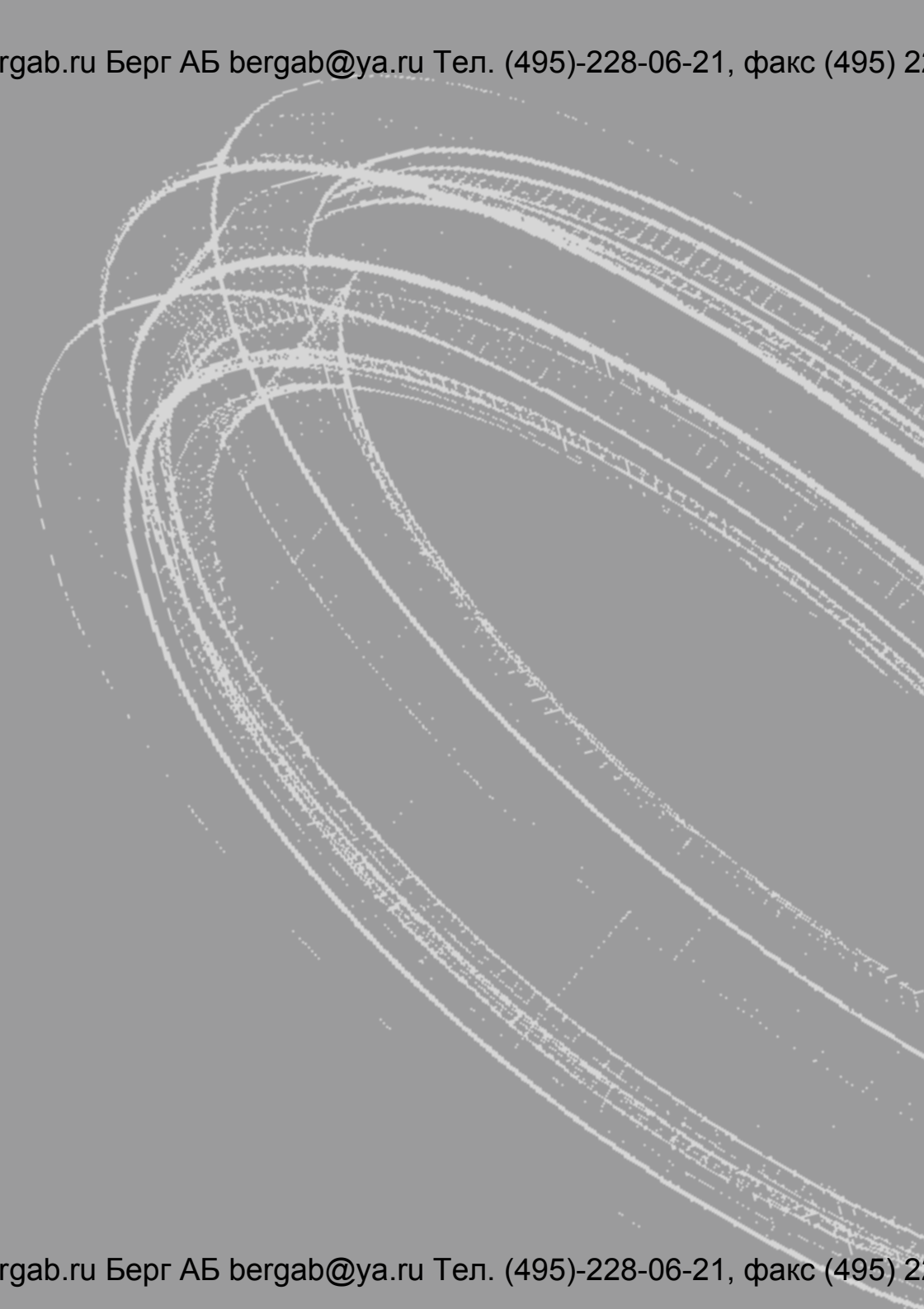

rgab.ru Берг АБ bergab@ya.ru Тел. (495)-228-06-21, факс (495) 2

rgab.ru Берг АБ bergab@ya.ru Тел. (495)-228-06-21, факс (495) 2

Piston seals

Piston seals **20**
Sealing ability 20
Fixing the piston to the rod 21
Guiding of the piston in the cylinder tube 21
Single-acting piston seals 23
Double-acting piston seals 24
Double-acting compact piston seals 24
Tough operating conditions and large temperature variations 26
Double-acting polyurethane slide ring piston seals 28
Double-acting PTFE slide ring piston seals 28
Service conditions 30
Installation and assembly. 36
Seal design and installation 40

Product tables
CUT 42
PEN 44
Piston seals series GHT 46
Slide ring seals series GH 50
Slide ring seals series GL 62
URG 70
Double-acting compact piston seals, series M 72
A 80
SM 81
MSS 82
SAARR 83
SA 84
SWRR 86
SAW 88

rgab.ru Берг АБ bergab@ya.ru Тел. (495)-228-06-21, факс (495) 2

rgab.ru Берг АБ bergab@ya.ru Тел. (495)-228-06-21, факс (495) 22

Piston seals

The basic demand on piston seals as well as on rod seals for hydraulic cylinders under the operating conditions for which they have been chosen, is to maintain a high level of sealing performance during their service life. The overall demands on both these function-determining main seals in the hydraulic cylinder are meanwhile very different in many respects. In this section, we feature both single- and double-acting piston seals.

The choice of the type of piston seal is to a great extent decided by the way in which the cylinder operates. For a cylinder which is exclusively single-acting, it is always best to choose the type of seal designed to provide optimum sealing qualities for single-acting functions, with, for instance, the thinnest possible lubrication film that can pass through the contact area between the seal and the cylinder tube surface.

The best sealing capacity of a double-acting cylinder is achieved by choosing a double-acting seal. A piston design where two single-acting seals on the piston for a double-acting cylinder are used can easily give rise to a breakdown. The reason is that a very high pressure can be trapped between the seals.

Piston seals, both single- and double-acting, can be designed for and used with integrated or separate back-up rings and guide rings. The ultimate choice must be based on the operating conditions of the cylinder.

Sealing ability

The demand for tightness or low leakage may seem easy to define, but in fact covers many different aspects. When requirement specifications are drawn up, demands must be defined concerning the thickness of the lubrication film allowed during the reciprocating movement at different speeds, pressures, temperatures, bearing loads, acceleration and vibration conditions, as well as the ability to seal at resting positions, with or without hydraulic pressure.

A change in the position of the piston, such as when a load is to be kept at a particular level, is perhaps not allowed or is specified with a maximum permitted lowering speed per time unit. With strict demands for minimal static leakage, it is essential that the tightness of the valves also is carefully checked.

Sealing ability concepts are dealt with separately in more detail in the sections on single-acting or double-acting types of seals, since the requirements concerning these are often very different. In particular, this applies to the requirements for dynamic sealing ability.

Fig 1

Piston fixed using a locking nut and with a static seal between piston and rod end tap

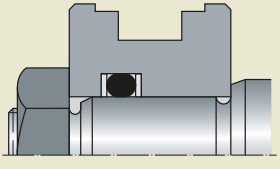

Fig 2

Piston welded to the rod end tap

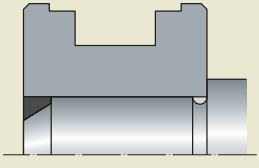

rgab.ru Берг АБ bergab@ya.ru Тел. (495)-228-06-21, факс (495) 22

rgab.ru Берг АБ bergab@ya.ru Тел. (495)-228-06-21, факс (495) 2

Fixing the piston to the rod
The piston can be fixed to the rod end by using a locking nut and a static seal between the piston and the rod end tap, so that it can be loosened during complete disassembly of the cylinder, see **fig 1**. It can also be welded to the rod if the disassembly of the cylinder can be done by removing the rod end eye, see **fig 2**.

Guiding of the piston in the cylinder tube
It is of the utmost importance that the cylinder in its entirety, but also its components, piston and rod, are designed so that the possibility of the piston to move radially under load and pressure changes is limited to a minimum. The seal's ability to fulfil the demand for retaining tightness, especially in cold conditions in arctic service, and the cylinder's ability to withstand buckling loads largely depend on the piston maintaining accurate centrality in all positions during the stroke, see **fig 3**.

In modern cylinders the piston is guided against the inner surface of the cylinder tube by means of plastic guide rings, which results in a less abrasive effect than the metal guide rings used earlier. Wear of the cylinder's inner surface therefore takes place much more slowly.

Contamination particles, which are always present to varying degrees in hydraulic oil, thus create much less damage than when being squeezed between two moving metal surfaces. Since the service life of the seal to a large extent depends on how quickly it becomes "worn-in" during its movement against the cylinder's inner surface, it is important that the surface retains its optimal characteristics long as possible.

The possibility for the piston to move radially in relation to the cylinder tube is determined by the interacting tolerances of the cylinder bore diameter, the radial thickness of the guide rings and the diameter of the guide ring's position on the piston. Great attention should be paid to minimizing these tolerances by careful design and selection of manufacturing methods for the parts included. The cylinder tube is most often manufactured with a diameter tolerance of H8 to H10, depending on the diameter. The choice of material for the guide rings, especially when a particularly long service life is demanded of the cylinders despite tough operating conditions, is a decisive factor for the operational reliability and service life of the cylinder. Guide rings of a phenolic/fabric material are used in most modern cylinders, as these can withstand extremely high stress without becoming permanently deformed.

The distance between the rod's guide ring and the piston's guide ring must be chosen keeping in mind the bending moment that could arise in the cylinder under difficult dynamic operating conditions, see **fig 4**, **page 22**.

Fig 3

Accurate guiding of the piston is required to maintain a proper sealing ability

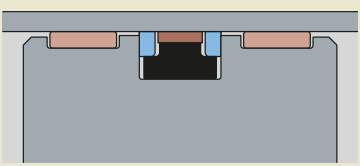

rgab.ru Берг АБ bergab@ya.ru Тел. (495)-228-06-21, факс (495) 2

rgab.ru Берг АБ bergab@ya.ru Тел. (495)-228-06-21, факс (495) 2

Fig **4**

The distance between the rod's and the piston's guide rings must be calculated based on the bending moment

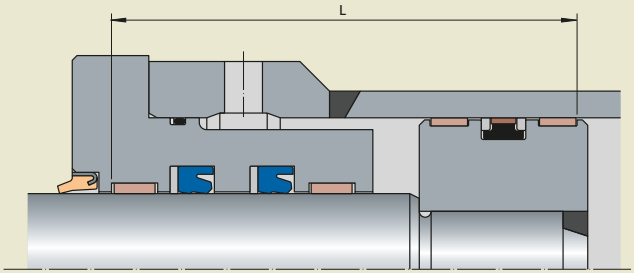

Fig **5**

Installation of a GS seal

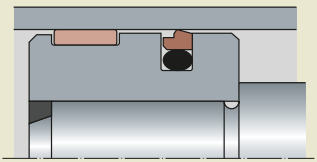

a

The chamfer on the inside diameter of the seal indicates the adjustment to an installation according to ISO 7425-1

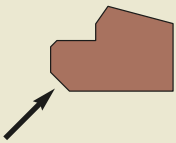

b

rgab.ru Берг АБ bergab@ya.ru Тел. (495)-228-06-21, факс (495) 2

rgab.ru Берг АБ bergab@ya.ru Тел. (495)-228-06-21, факс (495) 2

Single-acting piston seals

A single-acting piston seal is designed to function where pressure is applied from one side only, see type GS in **fig 5a**. The housing dimensions of type GS are in accordance with ISO 7425-2, which the chamfer on the seals' outside diameter indicates, see **fig 5b**. The guide function is either an integrated part of the seal, see **fig 6**, or separated from the sealing function by a guide ring in a separate housing groove, see **fig 7**.

The piston seal in single-acting cylinders must leave a minimum of lubrication film when passing along the cylinder's inner surface since the transportation of oil otherwise would result in a leakage to the exterior, which, depending on the cylinder's action, sooner or later would result in disruptions and the risk of accidents.

Usually the atmosphere side of the piston in a single-acting cylinder is directly or indirectly subjected to influences such as humidity and contamination particles from the environment, which can lead to damage of the seal. The inner surface of this type of cylinder is therefore often hard chromium plated or zinc galvanized in order to prevent corrosion. Hard chromium plating is also aimed at reducing susceptibility to damage caused by contamination particles.

In many cylinders, even the air which is "pumped" in and out during the movement of the piston is filtered, but now it is also common to install a piston wiper seal on the piston's outer end to provide additional protection against particles, see **fig 7**.

Up to now the most common type of seal in single-acting cylinders has been a compact seal type SW of nitrile rubber, with an integrated guide ring of acetal resin and a retainer ring type RR of acetal resin on the pressure side, see **fig 6**.

The most effective type of seal for pistons in single-acting cylinders is an asymmetric U-ring seal of polyetherurethane, type SAA, with an integrated back-up ring of acetal resin. The polyetherurethane is fairly flexible in cold conditions, and this type of seal is therefore suitable for the Scandinavian and arctic climate. The seal is locked on the pressure side with a retainer ring of acetal resin, type RR, and is best combined with a guide ring of a phenolic/fabric material and a PPUA piston wiper seal of polyurethane, see **fig 7**. This sealing solution has over many years proven to provide a long service life and good sealing properties.

2

Fig 6

Piston for a turning cylinder on a lorry crane with piston seal + retainer ring type SWRR

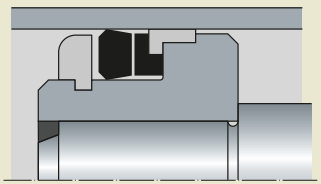

Fig 7

Piston for a turning cylinder on a forestry crane with piston seal + retainer ring type SAARR, a guide ring and a piston wiper seal type PPUA

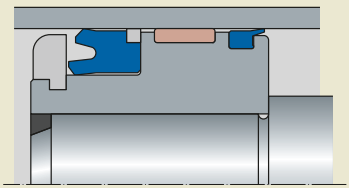

rgab.ru Берг АБ bergab@ya.ru Тел. (495)-228-06-21, факс (495) 2

rgab.ru Берг АБ bergab@ya.ru Тел. (495)-228-06-21, факс (495) 2

Double-acting piston seals

A double-acting piston seal is designed to operate with pressure from either side. Compared to single-acting piston seals, the demands on the dynamic sealing capacity of double-acting seals are not particularly great. Normally, a relatively thick lubrication film can be permitted between the piston seal material and the cylinder tube surface, so that the friction during the stroke action is minimized, and so that the reduction in wear increases the service life of the seal.

The transportation of oil which occurs during dynamic function is, however, small and insignificant in most operating conditions. The most common types of double-acting piston seals are normally so tight that they are sometimes even used as seals in single-acting cylinders. This type of installation should, however, be avoided.

The demand for absolute tightness of a double-acting piston seal at resting positions is just as great as for a single-acting piston seal. Static leakage can never be permitted.

What complicates the choice of seal design for different applications is the need for a reliable guide function, which combined with the seal, takes up as little space as possible both radially and axially. A short piston means less weight and/or increased stroke length within the same space. A shallow housing groove for the seal increases the possibility of reliably securing the piston to the rod.

In certain applications, the piston can also be equipped with a shock absorbing device. In other applications, it could be necessary to complement the piston with a wiper seal to prevent the cylinder tube surface, guide ring and seal from being damaged by contamination particles.

Minimal radial clearance between the piston and the cylinder tube not only provides good working conditions for the piston seal, but also the rod seal. A small clearance also reduces the risk of diesel ignition taking place in the seal housing groove.

Double-acting piston seals are symmetrical and their sealing functions are identical in both directions. Many different designs and qualification levels for different operational types and conditions are available.

Double-acting compact piston seals

Compact piston seals are generally constructed by using a nitrile rubber part enclosed on either side by a support ring. The support rings are usually made of a polyester elastomer. Their task is to prevent the nitrile rubber part from being damaged by extrusion into the clearance between the piston and the cylinder tube.

The third component of the compact piston seal is two guide rings, whose main task on either side of the seal ring/support ring is to ensure that the piston moves with smallest possible radial clearance in the cylinder tube without damaging its surface.

It is an advantage if the guide rings are well integrated with the support rings so that they jointly can provide good extrusion protection. It is also essential for the guide rings to be manufactured from material which has good bearing capacity and close tolerances on the radial wall thickness.

The most common design is type M, with guide rings where the flanged section is integrated into the sealing device. Type M has a smooth contact sealing surface profile. This builds up a good lubrication film between the seal and the cylinder's inner surface when the piston moves in relation to the cylinder tube, which provides the optimal conditions for a long operating service life, see **fig 8**.

This type of piston seal is manufactured in several different sizes, including a range which corresponds with the sizes according to ISO 6547. The basis for this seal design started being manufactured in about 1960, but has been continually

Fig **8**

Double-acting compact piston seal with 2 L-shaped guide rings type M

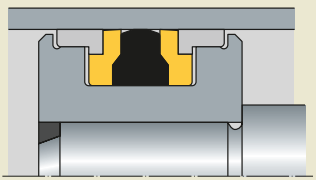

Fig **9**

Double-acting compact piston seal with three sealing edges type MD

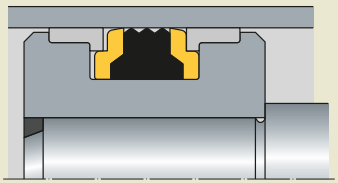

rgab.ru Берг АБ bergab@ya.ru Тел. (495)-228-06-21, факс (495) 2

rgab.ru Берг АБ bergab@ya.ru Тел. (495)-228-06-21, факс (495) 2

developed to keep pace with new, extensive experience. It is possible to use this type of seal design in light duty hydraulic applications with pressures of up to approximately 21 MPa.

In cases where a double-acting cylinder is to be used as a single-acting, with one side of the piston connected to the atmosphere, type MD is an appropriate choice. The shape of the central rubber seal part, with three sealing edges, results in the lubricating film during movement being thinner, see **fig 9**. Better sealing ability is, however, achieved at the expense of a slightly shorter service life. Type M and type MD can work between –40 and +100 °C.

Long experience has been accumulated in the solution which type M-R represents. The shape of the guide rings has made it possible to select material with good bearing capacity and allows them to be produced with close tolerances on the radial wall thickness. This in turn makes it possible to use closer tolerances on the seat diameter of these guide rings, see **fig 10**.

By using closer bore tolerances, e.g. H8, in combination with closer guide and guide seat tolerances, much better working conditions both for the piston seal and the rod seal are achieved. In addition, the shape of the guide rings makes it possible to manufacture them from a phenolic/-fabric material, which is suitable for use where high temperatures and heavy loads are present.

M-R can be used in light and medium duty hydraulic applications with pressures of up to 28 MPa. Type M-RTP is extremely resistant to wear, and can work within a wide temperature range, –40 to +120 °C. In the designation M-RTP, the TP stands for guide rings of glass fibre reinforced thermoplastic polyester, and in M-RPF, the PF stands for guide rings of a phenolic/fabric material.

Fig **10**

Type M-RTP

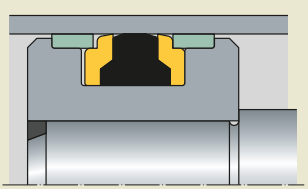

rgab.ru Берг АБ bergab@ya.ru Тел. (495)-228-06-21, факс (495) 2

rgab.ru Берг АБ bergab@ya.ru Тел. (495)-228-06-21, факс (495) 2

Tough operating conditions and large temperature variations

The double-acting compact piston seal types described in the previous section are currently the most frequently used solution on the market. This is because the seals are proven, readily available and cost-effective.

In the meantime, the need for more advanced solutions has been growing. Amongst others, the following points have come to the fore in new requirement specifications:

Effective prevention of metal contact and higher resistance to extrusion

- to enable even tougher service conditions

Lower radial section on seals

- in order to increase the mechanical strength of the piston and provide space for optimal solutions for fixing the piston to the rod.

Better resistance to wear and resistance to "diesel effect"

- allowing for higher pressure and use in demanding applications with severe operating service conditions.

Seal housing groove designs adapted to modern production methods

- to provide better surfaces in closed housing grooves and lower production costs.

Operating conditions have altered during the years, bringing about increased demands on seals. Average operating condition values can be illustrated by **Table 1**.

In order to be able to meet these demands, it is necessary to separate the guide function on the piston from the sealing function. The dimension and material of the guide ring can be selected, and the tolerances adapted to the application in question. Further information on piston guide rings is available in chapter "Guide rings and guide strips".

The seal type GHT is developed to meet these ever more frequent, higher demands, see **fig 11**.

Type GHT has back-up rings of a thermoplastic material which prevents extrusion of the seal material as well as contamination particles from reaching the seal. A T-shaped rubber part functions as an elastomeric energizer providing a radial sealing force to the slide ring. The sealing element of type GHT is a slide ring manufactured from different materials depending on the specific service conditions. Type GHT is dimensioned to fit seal housing grooves according to ISO 5597.

The basic design of type GHT has a T-ring of nitrile rubber, a slide ring of filled PTFE and back-up rings of acetal resin. The slide ring is also available in polyetherurethane. For more demanding applications, the T-ring can be supplied in hydrogenated nitrile rubber and the back-up rings of polyamide. For further information regarding available material combinations to fit different service conditions, see **Table 1** to **3**, **page 46** to **47**.

Table 1

Continuously increasing demands on seals

Period	Pressure		Service temperature		Stroke speed		Service life demand distance		time	
	from	to	from	to	from	to	from	to	from	to
	MPa		°C		m/s		km		h	
1970 – 1975	16	21	–30	+100	0,1	0,15	300	400	3 000	4 000
1990 – 1995	25	35	–40	+120	0,2	0,5	400	600	6 000	8 000
2000 –	40		–40	+120	0,2	>0,5	1 000		10 000	

rgab.ru Берг АБ bergab@ya.ru Тел. (495)-228-06-21, факс (495) 2

rgab.ru Берг АБ bergab@ya.ru Тел. (495)-228-06-21, факс (495) 2

Piston seal set type CUT is developed for use in heavy duty applications and is mainly installed in double-acting cylinders, see **fig 12**.

Type CUT is designed with a step cut slide ring manufactured from a filled polyamide and a rectangular cut energizer of nitrile rubber as the basic material. The function of the energizer is also to seal statically in the seal housing groove.

The slide ring is very resistant to wear and clearance extrusion. The material properties provide low friction, also under high pressure.

Type CUT can be used at pressures of up to 50 MPa and under certain circumstances at short pressure pulses of up to 100 MPa. The basic design withstands a stroke speed of maximum 1 m/s and can work in the temperature range –30 to +110 °C and allows a radial clearance between piston and cylinder tube of up to 0,5 mm. Type CUT is also available in a specific material combination for the temperature range of –40 to +130 °C.

The design with a cut slide ring provides a very simple assembly into a closed seal housing groove. Type CUT is dimensioned to fit seal housing grooves according to ISO 7425-1.

Fig **11**

Double-acting piston seal type GHT

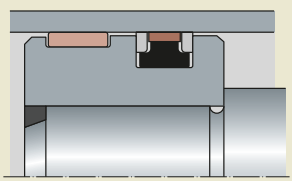

Fig **12**

Piston seal set type CUT

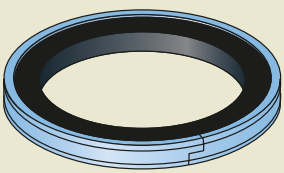

rgab.ru Берг АБ bergab@ya.ru Тел. (495)-228-06-21, факс (495) 2

rgab.ru Берг АБ bergab@ya.ru Тел. (495)-228-06-21, факс (495) 2

Double-acting polyurethane slide ring piston seals

The double-acting piston seal types PEN and URG consist of two separate parts; a polyurethane slide ring and an energizer of nitrile rubber, which also has a static sealing function in the seal housing groove see **fig 13** and **14**.

The slide ring of both types has chamfered sealing edges for optimal tightness and resistance to extrusion as well as notches in the radial faces for rapid reaction to changes in the pressure direction. An "oil groove" in the sealing surface increases the sealing ability and reduces the friction. The slide ring of type PEN is designed with a radius on the static side in order to optimally function with the O-ring.

Type PEN is designed with an O-ring as energizer, while the energizing element of type URG has a square cross section.

Both types are used in cylinders for light and medium heavy duty applications and can be assembled without using assembly tools on pistons with closed seal housing grooves according to ISO 7425-1.

The separated guide function enables an adjustment to the specific service conditions in question, from injection moulded, thermoplastic guide rings for light duty to turned guide rings in a phenolic/fabric material. The latter material withstands higher side loads and can be machined with closer tolerances, which is necessary for the use of both type PEN and URG in appplications within the high pressure range.

The normal temperature range for both types is –30 to +90 °C.

Type PEN is cost effective and is designed to reduce the friction between the seal and the counterface surface and is therefore recommended for applications with pressures up to 25 MPa. In applications with higher pressures type URG is more appropriate since the slide ring is produced of a material with higher resistance to extrusion.

Double-acting PTFE slide ring piston seals

Slide ring seals of PTFE are appropriate in applications with demands for low breakaway friction and extreme temperatures, as well as in aggressive fluids.

PTFE has properties which surpass all other known seal materials when it comes to low friction and chemical and thermal resistance. Compared with polyurethane and rubber materials used in sealing elements, PTFE is hard and non-elastic.

In order to take advantage of the excellent properties of PTFE, the primarily sealing slide ring made of PTFE must be combined with an energizing element. In addition to this, the slide ring must have a well-planned design and the energizing element must provide the necessary constant initial sealing force and guarantee the static sealing function in the housing groove see **fig 14**.

To obtain optimum service life, PTFE materials with different types of fillers are used, which improves resistance to deformation, increases resistance to wear, and reduces the risks of extrusion into the clearance between the piston and the cylinder tube. Our PTFE material for the widest range of applications contains bronze and molybdenum disulphide, and has the designation MS-292.

O-rings are most frequently used as energizing elements for slide rings since they are available in a large number of dimensions and materials and provide cost effective solutions.

From a functional point of view the slide ring is preferably pressed evenly against the cylinder tube surface along its entire contact width. This is possible to achieve with an energizing element with a square cross section instead of an O-ring.

Fig **13**

Piston seal type URG

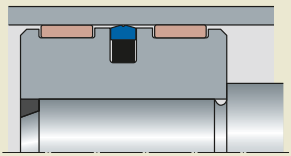

Fig **14**

Piston seal type PEN

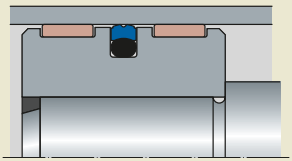

rgab.ru Берг АБ bergab@ya.ru Тел. (495)-228-06-21, факс (495) 2

rgab.ru Берг АБ bergab@ya.ru Тел. (495)-228-06-21, факс (495) 2

It is important to choose an energizing element consisting of a material with the best possible properties, since the function of the slide ring is totally dependent on the properties of the rubber material. An energizer with bad compression set values reduces the service life of the entire seal.

Slide ring seals of PTFE require careful handling and installation, otherwise the slide ring's delicate sealing surface can be damaged, thereby impairing its sealing function.

Depending on the choice of material for the energizing element, slide ring seals of PTFE can be used within a temperature range of –50 to +200 °C and in aggressive pressure media. Always contact the seal supplier concerning slide ring seals for applications where the temperature and pressure fluid differ from normal operating conditions for hydraulic oil in the temperature range of –20 to +110 °C.

The surface of the seal housing groove must be uniformly even, otherwise there is a risk of static leakage.

rgab.ru Берг АБ bergab@ya.ru Тел. (495)-228-06-21, факс (495) 2

rgab.ru Берг АБ bergab@ya.ru Тел. (495)-228-06-21, факс (495) 2

Service conditions

Pressure

The pressure level, the duration of the pressure cycles and changes in the pressure direction very much affect the risk of the seal being damaged by extrusion. The higher pressure, the higher demands on the other factors also affecting the seal function, e.g. temperature, speed, seal material and the clearance between piston and cylinder tube. The bore diameter tolerance and the cylinder tube's elastic expansion during the hydraulic pressure determine the radial play between the piston and the cylinder tube, depending also on the piston diameter tolerance. The difference between the smallest and the largest deviation of the diameter on each part gives the variation of the clearance which the seal has to cope with, see **Diagram 1**.

It is, however, also very important to consider the fact that it is more difficult for the seal to maintain its sealing properties at low pressure or in zero-pressure conditions. This applies specifically in extreme cold, when the sealing material is hard and less elastic, and the oil has a very high viscosity which makes it difficult to wipe off. A common characteristic of most types of seals is that the higher the pressure, the better they seal. The risk of the sealing properties being impaired at pressures of up to 40 MPa is small, provided that the surface of the cylinder tube is in good condition.

Double-acting compact piston seals with guide rings integrated in the support rings can withstand pressures of up to 40 MPa. For applications with higher pressure and shock pressure, it is possible to choose solutions with a guide function which is separated from the sealing function, such as e.g. type GHT see **fig 11**, **page 27**.

In certain cases where a suitable seal design with an integrated back-up ring is not available for the application in question, one solution could be to use a back-up ring with a radial sectional dimension smaller than the seal's slide ring, see **fig 16**.

Fig 15

Double-acting piston seal type GH

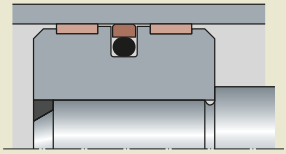

Fig 16

Combination of piston seal and back-up rings

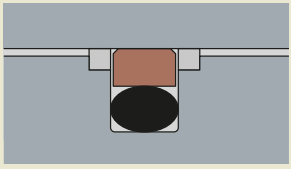

Diagram 1

Maximum clearance at 100 °C operating temperature and bore diameter 100 mm

$$\text{Max clearance} = \frac{D - D_1}{2}$$

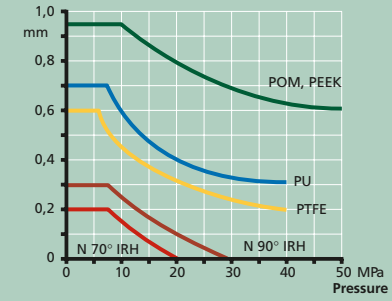

rgab.ru Берг АБ bergab@ya.ru Тел. (495)-228-06-21, факс (495) 2

rgab.ru Берг АБ bergab@ya.ru Тел. (495)-228-06-21, факс (495) 2

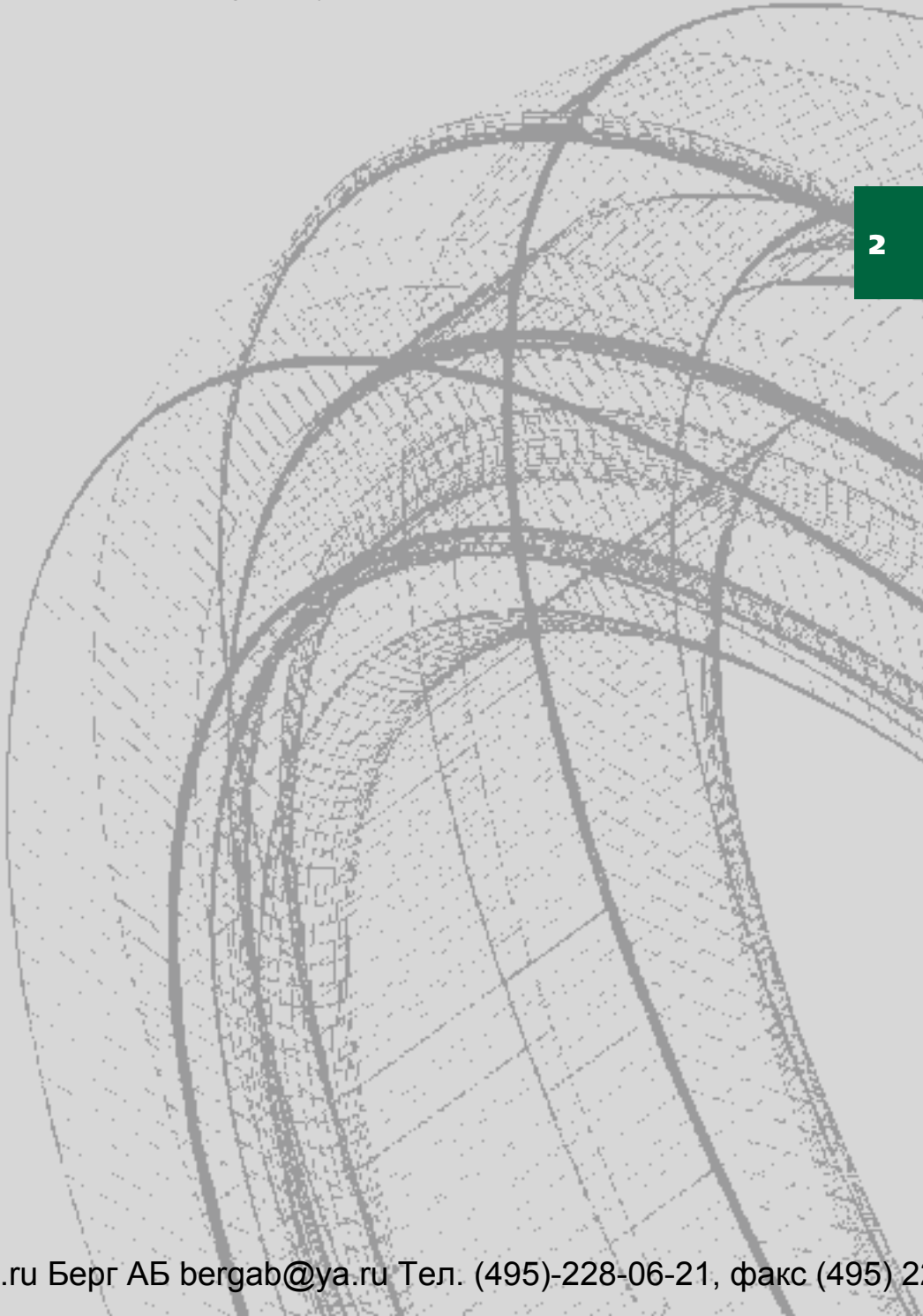

rgab.ru Берг АБ bergab@ya.ru Тел. (495)-228-06-21, факс (495) 2

rgab.ru Берг АБ bergab@ya.ru Тел. (495)-228-06-21, факс (495) 2

Cylinder tube and surface properties

Experience has shown that the surface properties of the cylinder tube have a great influence on the function and service life of the seal. The surface is usually defined by the surface roughness value µm R_a, i.e. the arithmetic mean deviation of the surface profile. This value does not, however, provide a complete scenario of how the surface can be expected to affect the seal. The reason for this is that two surfaces with the same value stated in µm R_a but with different surface profile characteristics can result in a varying degree of wear.

A surface with smooth profile characteristics provides a longer service life for the seal than a surface characterized by sharp profile details, but still with the same surface roughness value. A more important aspect is therefore the surface profile characteristics, or bearing capacity. The higher bearing capacity, the longer service life of the seal. **Table 2** shows the relation between different surface roughness values and the bearing capacity.

Results from our laboratory wear tests on double-acting compact piston seals are shown in **Diagram 2**. The degree of wear has been evaluated on a scale of 0 to 10, where 0 means that the seals is completely intact, 5 that is is worn but in working order and 10 that it is completely destroyed.

Referring to these test results we recommend a surface roughness value for surfaces working against seals of elastomeric materials of maximum 0,3 µm R_a and maximum 0,2 µm R_a surfaces working against PTFE seals. In this recommendation the bearing capacity is taken into consideration and is described as a relation between R_p and R_z according to the below formula:

For surfaces against seals of elastomeric materials:

0,3 ▽ R_z 1,2/$R_{p\,max}$ 45% of R_z

For surfaces against PTFE seals:

0,2 ▽ R_z 1,2/$R_{p\,max}$ 45% of R_z

We recommend a surface roughness value for the seal housing groove of maximum 0,8 µm R_a and maximum 1,6 µm R_a for other machined surfaces.

Diagram 2

Example of test results

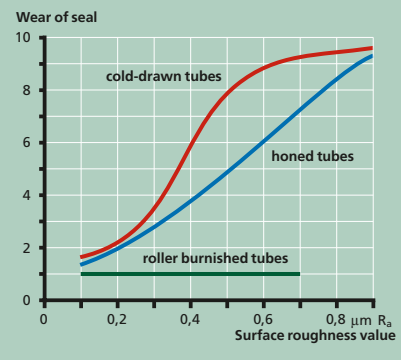

rgab.ru Берг АБ bergab@ya.ru Тел. (495)-228-06-21, факс (495) 2

rgab.ru Берг АБ bergab@ya.ru Тел. (495)-228-06-21, факс (495) 2

Table **2**

Surface properties

Surface profile	Pt	$R_{z\,max}$	R_z	R_a	R_p	Mr 1 C 0,25	Mr 2 C 0,25	Bearing capacity graph (Abbott Graph)
	–	–	–	µm	–	–	–	
	1	1	1	0,25	0,2	75 %	75 %	
	1	1	1	0,25	0,8	15 %	15 %	
	1	1	1	0,2	0,2	85 %	85 %	
	1	1	1	0,2	0,8	20 %	20 %	
	1	1	0,4	0,08	0,15	88 %	88 %	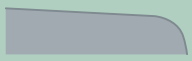
	1	1	0,4	0,08	0,85	7 %	7 %	
	1	1	1	0,2	0,5	25 %	25 %	
	1	1	1	0,3	0,3	38 %	38 %	
	1	0,5	0,4	0,1	0,2	85 %	17 %	

2

rgab.ru Берг АБ bergab@ya.ru Тел. (495)-228-06-21, факс (495) 2

rgab.ru Берг АБ bergab@ya.ru Тел. (495)-228-06-21, факс (495) 2

Diagram 3

Friction comparison between different types of piston seals during 100 km stroke at 25 MPa, 70 °C

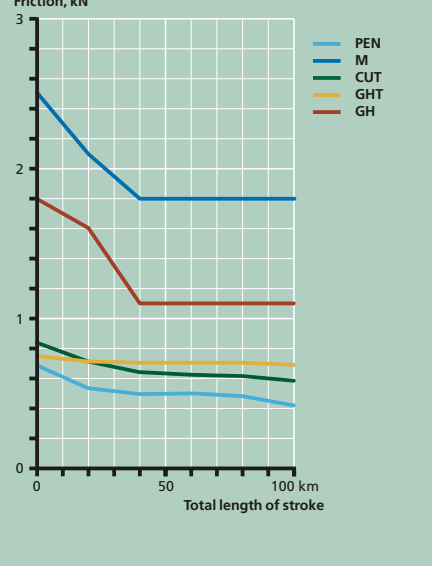

Diagram 4

Friction comparison between different types of piston seals at 70 °C

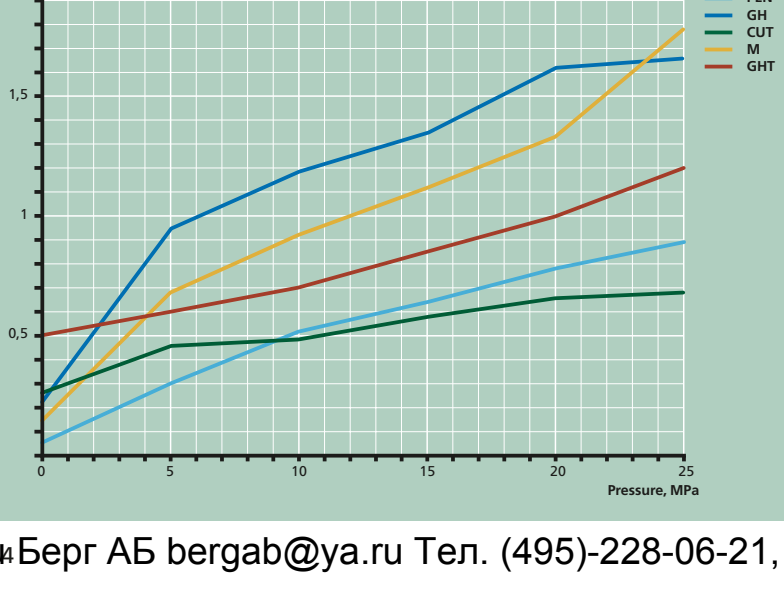

rgab.ru Берг АБ bergab@ya.ru Тел. (495)-228-06-21, факс (495) 2

rgab.ru Берг АБ bergab@ya.ru Тел. (495)-228-06-21, факс (495) 2

Friction
The friction between the seal and the counterface surface depends on a number of factors: surface roughness, surface characteristics, pressure, fluid, temperature, seal materials, type of seal and speed of movement, see **Diagram 3** and **4**.

Seal materials
The usual way of judging seal materials for hydraulic applications is to read the material specifications and try to compare specifications for various materials. This unfortunately leads to several pitfalls. Most specifications and test results can seldom be compared with one another if they have not been carried out in the same way and under the same conditions.

Many test results reproduce values based on test samples which have been manufactured according to particular specifications, and which deviate from those used in mass production. To avoid drawing the wrong conclusions, it is essential to take note of what the different specifications actually point out and refer to.

Because of costs and time pressure, test results often show values which have been recorded following short test periods. This of course provides a certain amount of information about the properties of the material, but it is considerably better to measure the changes in the properties of the material after a test period of 1 000 hours.

The properties which should initially be studied are those most important for the sealing function. We consider the following properties to be the most important:

- compression set,
- elasticity at low temperature (retraction test),
- change of hardness in oil, at e.g. 100 °C, and
- change of volume in oil, at e.g. 100 °C.

It is naturally not just the material's properties which determine the function of the seal. The design and construction of the seal are just as important, i.e. how the properties of the material can be optimally used for the task which the seal in question has to carry out.

Operating temperature
Stating the highest and lowest operating temperatures for a seal of a particular type of material or, most common, combination of materials is very complicated. A number of factors affect each other. **Diagram 5** provides general guidance regarding the operating temperature ranges for different types of regular design seals, and under otherwise normal operating conditions.

During normal use and installation, the respective materials provide satisfactory results within the temperature ranges shown in each column. Problems could begin to arise within the marked areas. Other materials should be chosen for use beyond these limits. Please contact us for further information.

Diagram 5

General guidance, operating temperatures

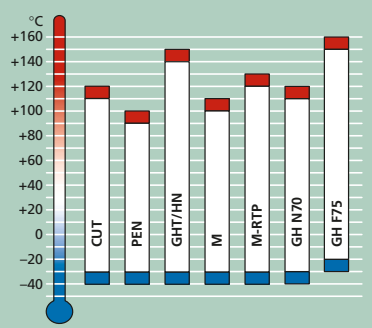

rgab.ru Берг АБ bergab@ya.ru Тел. (495)-228-06-21, факс (495) 2

rgab.ru Берг АБ bergab@ya.ru Тел. (495)-228-06-21, факс (495) 2

Installation and assembly

Installation

There are great advantages in choosing seal housing sizes and instructions according to international standards (ISO). This provides access to a large number of seal types and makes designed to work in these applications, see **fig 17** to **19**.

Fig **17**

Installation of a compact piston seal type M (ISO 6547)

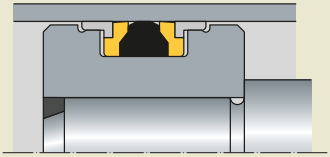

Fig **18**

Installation of a piston slide ring seal type GC (ISO 7425-1)

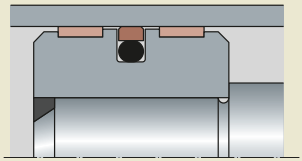

Fig **19**

Installation of a GHT seal (ISO 5597)

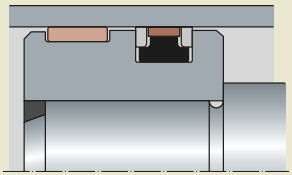

rgab.ru Берг АБ bergab@ya.ru Тел. (495)-228-06-21, факс (495) 2

rgab.ru Берг АБ bergab@ya.ru Тел. (495)-228-06-21, факс (495) 2

Fillet radii for seal housing grooves
Guiding principles for maximum fillet radii in seal housing grooves are stated in the drawings introducing each dimension table, see **Table 3**.

Fillet radii for guide ring seat grooves
It is important that the shape of the seat grooves for the guide rings to be used on the piston matches the shape of the guide rings themselves. Avoid larger radii than 0,4 mm. The safest way to avoid problems is to countersink the radii in the base diameter of the guide ring seat groove, see **Table 3**.

Groove edges
All groove edges are smoothed and rounded off to R = 0,1 to 0,2 mm.

Assembly lead-in chamfers
The angle of the assembly lead-in chamfers for seals should be minimum 20° and maximum 30°. The length of the chamfers can be chosen from **Table 4**.

Table 3

Countersinking the radii in the base diameter of the guide ring seat groove

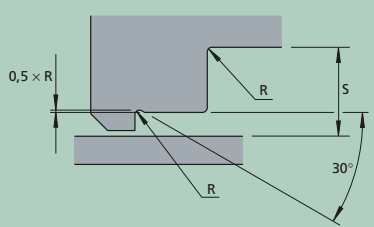

Radial depth S	Countersinking radius R
mm	mm
< 10	0,4
≥ 10	0,8

Table 4

Assembly lead-in chamfer

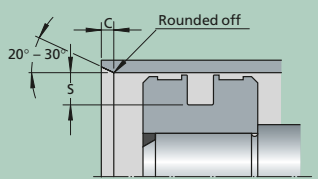

Radial depth S	Axial length C
mm	mm
3,5	2
4	2
5	2,5
7,5	4
10	5
12,5	6,5
15	7,5
20	10

rgab.ru Берг АБ bergab@ya.ru Тел. (495)-228-06-21, факс (495) 2

rgab.ru Берг АБ bergab@ya.ru Тел. (495)-228-06-21, факс (495) 2

Assembly tools

The PTFE part of slide ring seals is resilient up to a point, and to a limited extent their circumferential shape can be altered plastically without altering the material properties. By using certain caution, the slide ring for a piston seal can therefore be stretched onto a piston and pushed forward to a closed seal housing groove. This is best done by using simple assembly tools made of polyamide or acetal resin, see **fig 20**.

The slide ring's temporary stretch will slowly return by means of the material's elasticity. This can, however, be accelerated by pushing the piston with seal assembled through a wide lead-in chamfered calibration sleeve, see **fig 21**.

Compact piston seals can often be assembled without using special tools, but in cases where seals with a heavy section in relation to the diameter of the piston are chosen, simple tools can facilitate the assembly. These tools should be adapted to the other equipment for the cylinder assembly. Please contact us for further instructions.

Fig **20**

Assembly tool

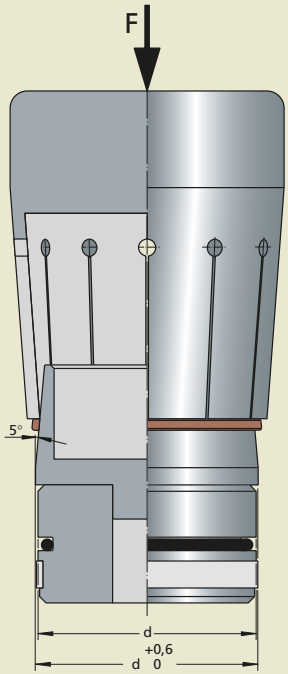

Fig **21**

Calibration sleeve

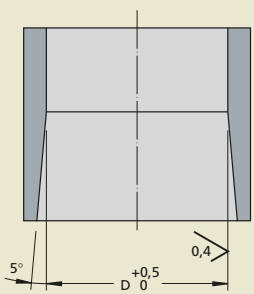

rgab.ru Берг АБ bergab@ya.ru Тел. (495)-228-06-21, факс (495) 2

rgab.ru Берг АБ bergab@ya.ru Тел. (495)-228-06-21, факс (495) 22

rgab.ru Берг АБ bergab@ya.ru Тел. (495)-228-06-21, факс (495) 22

rgab.ru Берг АБ bergab@ya.ru Тел. (495)-228-06-21, факс (495) 2

Seal design and installation

Our piston seal programme is very extensive regarding the number of seal types as well as material combinations. Please see **fig 22** and **23** for single- and double-acting piston seals.

In **Matrix 1**, figure 5 represents the most appropriate design and figure 1 the least appropriate. Please select your most important decisive factors when choosing seal design and installation and mark possible solutions. Then study further factors, installation instructions and dimension tables.

The housing groove dimensions (or seal sizes) should be selected in order to make sure that seals of different material combinations can be chosen based on the varying working conditions for cylinders of the same design. The seal design should be adapted to the manufacturing equipment and methods to be used when producing the cylinder details. Please feel welcome to contact us for further discussions.

Piston seals								
Type/series	**CUT**	**PEN**	**GHT**	**GH**	**GL**	**URG**	**M**	**M-R**
Material	PA N	PU N	PTFE N POM	PTFE N	PTFE N	PU N	N POM	N TP/PF
Page	**42**	**44**	**48**	**54**	**64**	**70**	**74**	**74**
Single-acting Double-acting	X	X	X	X	X	X	X	X
Pressure < 16 MPa < 25 MPa < 40 MPa	 5 5 5	 5 5 3	 5 5 5	 5 5 5	 5 5 3	 5 5 3	 5 4 4	 5 5 4
High temperature > +110 °C	5	4	5	5	5	4	5	5
Low temperature < –30 °C	5	4	5	4	4	4	4	4
Friction pressure = 0 pressure > 0	 5 5	 5 5	 5 5	 5 5	 5 5	 5 5	 4 4	 4 4
Surface sensitivity	5	5	5	4	4	5	4	4
Tolerance sensitivity	5	5	4	4	4	5	4	5
Service life	5	5	5	4	4	5	4	5
Assembly	5	5	5	5	3	5	5	5
Cost of installation	5	5	5	5	4	4	5	4
Sealing ability pressure = 0 pressure > 0	 5 5	 5 5	 5 5	 4 4	 4 3	 5 5	 5 5	 5 5
Preferred in new designs	X	X	X	X		X		

rgab.ru Берг АБ bergab@ya.ru Тел. (495)-228-06-21, факс (495) 2

rgab.ru Берг АБ bergab@ya.ru Тел. (495)-228-06-21, факс (495) 2

Fig **22**

Double-acting piston seal type GHT

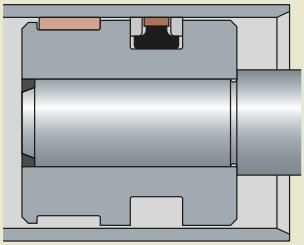

Fig **23**

Single-acting piston seal type SAARR

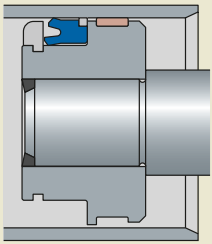

Matrix **1**

MD	A	SM	MSS	SAARR	SA	SWRR	SAW
N POM	N POM	N POM	N POM	PU POM	PU	N POM	PU POM
74	**80**	**81**	**82**	**83**	**84**	**86**	**88**
X	X	X	X	X	X	X	X
5 4 3	5 5 5	5 5 3	5 3 1	5 5 4	5 5 3	5 4 3	5 5 3
5	5	4	5	4	4	5	4
4	5	4	4	5	3	4	3
4 4	3 4	5 4	4 4	4 4	4 4	4 4	4 4
3	5	5	4	4	5	4	5
4	5	4	4	4	4	4	4
3	5	5	4	5	5	4	5
5	4	5	5	5	5	5	5
5	3	5	5	5	5	5	5
5 5	5 5	5 5	5 5	5 5	5 5	5 5	5 5

rgab.ru Берг АБ bergab@ya.ru Тел. (495)-228-06-21, факс (495) 2

rgab.ru Берг АБ bergab@ya.ru Тел. (495)-228-06-21, факс (495) 2

Piston seals type CUT
D **50 – 260** mm

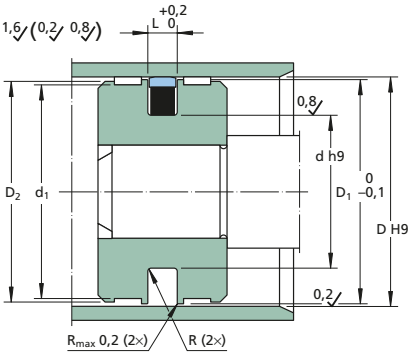

$$D_{2\,min} = \frac{D + d_1}{2}$$

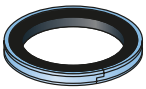

Type CUT
Slide ring of polyamide. Elastomeric spring of nitrile rubber.

The housing dimensions and tolerances stated are applicable at pressures of up to 50 MPa within the temperature range of –30 to +110 °C with a maximum speed of 1 m/s. Please read **page 27** for more information.

At applications with special demands beyond the above stated values, please contact us for advice and instructions.

Dimensions					Designation	ISO 7425-1
D	d	L	D_1	R		
mm					–	
50	34,5	6,3	49	0,5	**CR CUT 50×34.5×6.3**	•
63	47,5	6,3	62	0,5	**CR CUT 63×47.5×6.3**	•
80	64,5	6,3	79	0,9	**CR CUT 80×64.5×6.3**	•
90	69	8,1	89	0,9	**CR CUT 90×69×8.1**	
100	79	8,1	99	0,9	**CR CUT 100×79×8.1**	
	84,5	6,3	99	0,9	**CR CUT 100×84.5×6.3**	•
105	84	8,1	103,8	0,9	**CR CUT 105×84×8.1**	
110	89	8,1	108,8	0,9	**CR CUT 110×89×8.1**	
115	94	8,1	113,8	0,9	**CR CUT 115×94×8.1**	
120	99	8,1	118,8	0,9	**CR CUT 120×99×8.1**	
125	104	8,1	123,8	0,9	**CR CUT 125×104×8.1**	•
	109,5	6,3	123,8	0,9	**CR CUT 125×109.5×6.3**	•
130	109	8,1	128,8	0,9	**CR CUT 130×109×8.1**	
135	114	8,1	133,8	0,9	**CR CUT 135×114×8.1**	
140	119	8,1	138,8	0,9	**CR CUT 140×119×8.1**	
150	129	8,1	148,8	0,9	**CR CUT 150×129×8.1**	
160	139	8,1	158,8	0,9	**CR CUT 160×139×8.1**	•
165	144	8,1	163,8	0,9	**CR CUT 165×144×8.1**	
170	149	8,1	168,8	0,9	**CR CUT 170×149×8.1**	
180	159	8,1	178,8	0,9	**CR CUT 180×159×8.1**	
190	169	8,1	188,8	0,9	**CR CUT 190×169×8.1**	
200	179	8,1	198,8	0,9	**CR CUT 200×179×8.1**	•

rgab.ru Берг АБ bergab@ya.ru Тел. (495)-228-06-21, факс (495) 2

rgab.ru Берг АБ bergab@ya.ru Тел. (495)-228-06-21, факс (495) 2

Dimensions					Designation	ISO 7425-1
D	d	L	D_1	R		
mm					–	
210	189	8,1	208,8	0,9	**CR CUT 210×189×8.1**	
220	199	8,1	218,8	0,9	**CR CUT 220×199×8.1**	
230	209	8,1	228,8	0,9	**CR CUT 230×209×8.1**	
235	214	8,1	233,8	0,9	**CR CUT 235×214×8.1**	
250	229	8,1	248,8	0,9	**CR CUT 250×229×8.1**	•
260	239	8,1	258,8	0,9	**CR CUT 260×239×8.1**	

rgab.ru Берг АБ bergab@ya.ru Тел. (495)-228-06-21, факс (495) 2

rgab.ru Берг АБ bergab@ya.ru Тел. (495)-228-06-21, факс (495) 2

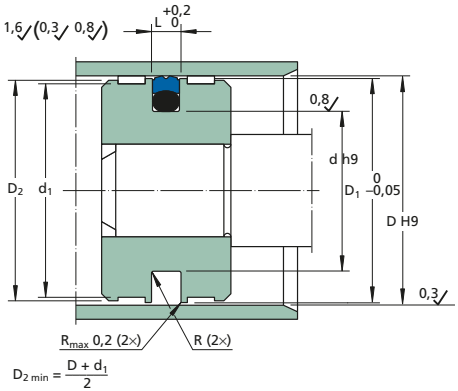

Type PEN
Slide ring of polyurethane. Energizer of nitrile rubber.
The housing dimensions and tolerances are applicable at pressures up to 25 MPa within the temperature range of –30 to +90 °C with a maximum speed of 0,5 m/s. At applications with special demands beyond the above stated values, please contact us for advice and instructions.

Dimensions					Designation	ISO 7425-1
D	d	L	D_1	R		
mm				–		
25	17,5	3,2	24,6	0,5	**CR PEN 25×17.5×3.2**	•
32	24,5	3,2	31,6	0,5	**CR PEN 32×24.5×3.2**	•
40	29	4,2	39,5	0,5	**CR PEN 40×29×4.2**	•
	24,5	6,3	39,4	0,5	**CR PEN 40×24.5×6.3**	
50	34,5	6,3	49,4	0,5	**CR PEN 50×34.5×6.3**	•
	39	4,2	49,5	0,5	**CR PEN 50×39×4.2**	•
55	39,5	6,3	54,4	0,5	**CR PEN 55×39.5×6.3**	
60	44,5	6,3	59,4	0,5	**CR PEN 60×44.5×6.3**	
	49	4,2	59,5	0,5	**CR PEN 60×49×4.2**	
63	47,5	6,3	62,4	0,5	**CR PEN 63×47.5×6.3**	•
	52	4,2	62,5	0,5	**CR PEN 63×52×4.2**	•
65	54	4,2	64,5	0,9	**CR PEN 65×54×4.2**	
	49,5	6,3	64,4	0,9	**CR PEN 65×49.5×6.3**	
70	59	4,2	69,5	0,9	**CR PEN 70×59×4.2**	
	57	6,3	69,4	0,9	**CR PEN 70×57×6.3**	
	54,5	6,3	69,4	0,9	**CR PEN 70×54.5×6.3**	
75	59,5	6,3	74,4	0,9	**CR PEN 75×59.5×6.3**	
80	64,5	6,3	79,4	0,9	**CR PEN 80×64.5×6.3**	•
	59	8,1	79,2	0,9	**CR PEN 80×59×8.1**	
85	69,5	6,3	84,4	0,9	**CR PEN 85×69.5×6.3**	
90	74,5	6,3	89,4	0,9	**CR PEN 90×74.5×6.3**	
	69	8,1	89,2	0,9	**CR PEN 90×69×8.1**	
100	84,5	6,3	99,4	0,9	**CR PEN 100×84.5×6.3**	•
	79	8,1	99,2	0,9	**CR PEN 100×79×8.1**	
110	94,5	6,3	109,4	0,9	**CR PEN 110×94.5×6.3**	
	89	8,1	109,2	0,9	**CR PEN 110×89×8.1**	

rgab.ru Берг АБ bergab@ya.ru Тел. (495)-228-06-21, факс (495) 2

rgab.ru Берг АБ bergab@ya.ru Тел. (495)-228-06-21, факс (495) 2

Dimensions					Designation	ISO 7425-1
D	d	L	D_1	R		
mm				–		
120	104,5	6,3	119,4	0,9	**CR PEN 120×104.5×6.3**	
	99	8,1	119,2	0,9	**CR PEN 120×99×8.1**	
125	109,5	6,3	124,4	0,9	**CR PEN 125×109.5×6.3**	
	104	8,1	124,2	0,9	**CR PEN 125×104×8.1**	

rgab.ru Берг АБ bergab@ya.ru Тел. (495)-228-06-21, факс (495) 2

rgab.ru Берг АБ bergab@ya.ru Тел. (495)-228-06-21, факс (495) 2

Piston seals series GHT

SEALPOOL slide ring seals are designated according to a system which clearly states the seal series, dynamic sealing diameter (bore), nominal housing groove diameter, housing groove width and material. The designation codes of series GHT are shown in **Table 1**.

Series GHT is designed to fit into seal housing grooves according to ISO 5597. GHT is available in several different material combinations in order to adjust to the varying demands of different applications while keeping the same groove dimensions. The most common combinations are presented in **fig 1** as well as **Tables 2** and **3**.

Choice of material

Slide rings

The choice of seal materials always includes a compromise between advantages and disadvantages. The slide ring, the function of which is to seal dynamically, can be delivered in many different PTFE materials and of polyurethane or polyethylene.

The properties of PTFE exceeds all other known materials when it comes to low friction and chemical and thermal resistance. Unfilled PTFE provides most often a lower friction than a filled PTFE material and the lowest degree of wear of the cylinder tube surface. However, its own resistance to wear and deformation is limited.

Common for all filled PTFE materials is their different degree of better resistance to wear and deformation. There is a large number of different PTFE materials with variants of fillers. Each possesses different properties appropriate for different applications and service conditions. Our PTFE material with the widest application range has the fillers bronze and molybdenum disulphide and has the designation MS-292.

Slide rings of polyurethane have, thanks to their high wear and tear resistance, longer service life and are less susceptible to damages. They provide high sealing ability and can be assembled without assembly tools. They are, however, less resistant to chemicals and high temperatures.

Energizer

The function of the T-shaped elastomeric part is to energize the slide ring and the back-up rings as well as to seal statically in the seal housing groove.

The choice of material depends on the demand specification of the seal. The most commonly used material is nitrile rubber which withstands temperatures up to 100 °C and the most frequently used hydraulic media. Higher temperatures (up to 110 °C) demand hydrogenated nitrile rubber.

Back-up rings

The function of the back-up rings is to protect the dynamic sealing part (the slide ring) from extru-

Table 1

Designation codes for series GHT piston seals

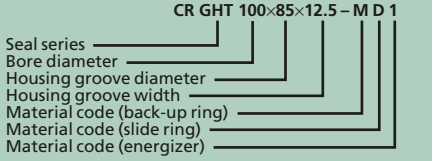

Fig 1

Common material combinations in the GHT series

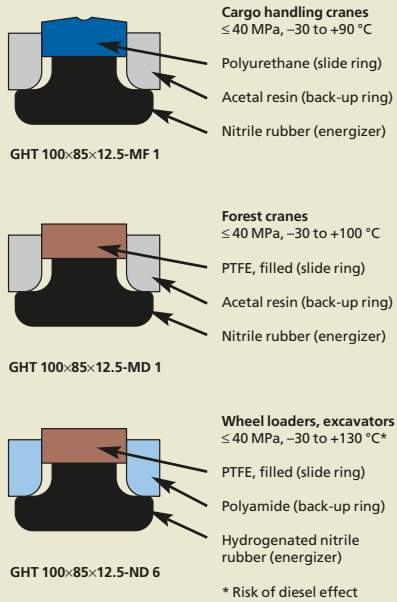

rgab.ru Берг АБ bergab@ya.ru Тел. (495)-228-06-21, факс (495) 2

rgab.ru Берг АБ bergab@ya.ru Тел. (495)-228-06-21, факс (495) 2

sion and to wipe off particles and prevent them from reaching and damaging the seal. The overlapping cut of the back-up rings can, when influenced by the energizer, result in a diameter alteration to cover the clearance, which varies under pressure and/or side loads. The inside diameter radius of the back-up rings should be directed towards the corresponding shape of the energizer, i.e. towards the centre of the seal.

Back-up rings of acetal resin are appropriate for applications with temperatures up to 110 °C and the most commonly used hydraulic media. Back-up rings of polyamide can withstand temperatures up to 130 °C. Back-up rings can also be delivered in other materials for applications with specific demands.

Table 2

Slide rings and back-up rings, material codes

Code	MS	Material type
MD	292 A	Slide ring of PTFE + bronze, back-up ring of acetal resin
ND	292 PA	Slide ring of PTFE + bronze, back-up ring of polyamide
MF	PU A	Slide ring of polyurethane, back-up ring of acetal resin
NF	PU PA	Slide ring of polyurethane, back-up ring of polyamide

Table 3

Rubber parts, material codes

Code	MS	Rubber type
1	N70	Nitrile rubber, 70° IRH
2	N84	Nitrile rubber, low temperature, 70° IRH
3	F75	Fluorocarbon rubber, 75° IRH
4	Q70	Silicone rubber, 70° IRH
5	E70	Ethylene-propylene rubber (EPDM), 70° IRH
6	HN80	Hydrogenated nitrile rubber, 80° IRH

rgab.ru Берг АБ bergab@ya.ru Тел. (495)-228-06-21, факс (495) 2

ergab.ru Берг АБ bergab@ya.ru Тел. (495)-228-06-21, факс (495) 22

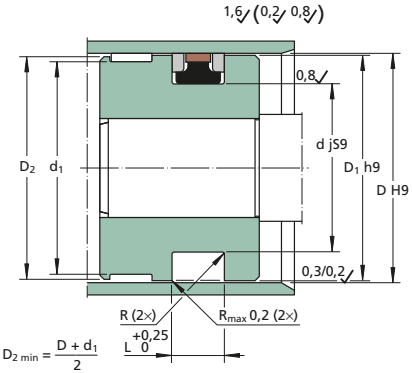

Series GHT
GHT is available in several different material combinations in order to adjust to the varying demands of different applications while keeping the same groove dimensions.

Dimensions					Designation	ISO 5597
D	d	L	D_1	R		
mm					–	
40	30	8	39,3	0,3	**CR GHT 40×30×8-MD1**	•
50	40	8	49,3	0,3	**CR GHT 50×40×8-MD1**	•
60	50	8	59,3	0,3	**CR GHT 60×50×8-MD1**	
63	53	8	62,3	0,3	**CR GHT 63×53×8-MF1**	•
70	60	8	69,3	0,3	**CR GHT 70×60×8-MD1**	
80	65	12,5	79	0,4	**CR GHT 80×65×12.5-MD1**	•
90	75	12,5	89	0,4	**CR GHT 90×75×12.5-MD1**	
100	85	12,5	99	0,4	**CR GHT 100×85×12.5-MD1**	•
110	95	12,5	109	0,4	**CR GHT 110×95×12.5-MF1**	
115	100	12,5	114	0,4	**CR GHT 115×100×12.5-MD1**	
120	105	12,5	119	0,4	**CR GHT 120×105×12.5-MD1**	
125	110	12,5	124	0,4	**CR GHT 125×110×12.5-MD1**	
	112,7	14,7	124	0,4	**CR GHT 125×112.7×14.7-ND1**	
130	115	12,5	129	0,4	**CR GHT 130×115×12.5-MF1**	
140	117	16	139	0,4	**CR GHT 140×117×16-ND6**	
	121,5	19	138,8	0,6	**CR GHT 140×121.5×19-ND1**	
	125	12,5	139	0,4	**CR GHT 140×125×12.5-MD1**	
150	127	16	149	0,4	**CR GHT 150×127×16-ND6**	
	135	12,5	149	0,4	**CR GHT 150×135×12.5-MD1**	
160	141,5	19	158,8	0,6	**CR GHT 160×141.5×19-ND1**	
	145	12,5	159	0,4	**CR GHT 160×145×12.5-MD1**	
170	155	12,5	169	0,4	**CR GHT 170×155×12.5-MD1**	
180	161,5	19	178,8	0,6	**CR GHT 180×161.5×19-ND1**	
	165	12,5	179	0,4	**CR GHT 180×165×12.5-MD1**	

ergab.ru Берг АБ bergab@ya.ru Тел. (495)-228-06-21, факс (495) 22

rgab.ru Берг АБ bergab@ya.ru Тел. (495)-228-06-21, факс (495) 2

Dimensions					Designation
D	d	L	D_1	R	
mm					–
190	175	12,5	189	0,4	**CR GHT 190×175×12.5-ND6**
200	180	16	198,8	0,6	**CR GHT 200×180×16-MD1**
	181,5	19	198,8	0,6	**CR GHT 200×181.5×19-ND1**
220	200	16	218,8	0,6	**CR GHT 220×200×16-MD1**
230	210	16	228,8	0,6	**CR GHT 230×210×16-ND6**
250	230	16	248,8	0,6	**CR GHT 250×230×16-MD1**
260	240	16	258,8	0,6	**CR GHT 260×240×16-ND6**
280	260	16	278,8	0,6	**CR GHT 280×260×16-MD1**
300	280	16	298,8	0,6	**CR GHT 300×280×16-MD1**
320	295	20	318,8	0,8	**CR GHT 320×295×16-MD1**
360	335	20	358,8	0,8	**CR GHT 360×335×20-MD1**

rgab.ru Берг АБ bergab@ya.ru Тел. (495)-228-06-21, факс (495) 2

rgab.ru Берг АБ bergab@ya.ru Тел. (495)-228-06-21, факс (495) 2

Piston seals series G

SEALPOOL slide ring seals are designated according to a system which clearly states the seal series, type, dynamic sealing diameter (bore), nominal housing groove diameter, housing groove width and material, see **Table 1**.

Seal series/type

All types of series G consist of a dynamically sealing slide ring of PTFE and a static, elastomeric part which also functions as an interference element. They are designed for applications demanding low friction, small housing dimensions and a long service life. The housing dimensions are in accordance with ISO 7425-1, see **Table 2**. See **fig 1** and **Table 5** for further information on the different types.

Seal materials

The choice of seal materials always includes a compromise between advantages and disadvantages. Slide ring seals can be delivered with slide rings of several different PTFE materials and of polyurethane or polyethylene. The materials which we most often suggest are stated in **Table 3** and **4**. Please also see **Table 6**, **page 53**, for further information on designs and materials.

There is a large number of different PTFE materials with variants of fillers, e.g. glass fibre, carbon, graphite, molybdenum disulphide, metal oxides, polymeric fillers and combinations of different fillers. Each possesses different properties appropriate for different applications and service conditions. Our PTFE material for the widest range of applications contains bronze and molybdenum disulphide and has the designation MS-292.

Unfilled PTFE provides most often a lower friction than a filled PTFE material and the lowest degree of wear of the cylinder tube surface. However, its own resistance to wear and deformation under load is limited.

Common for all filled PTFE materials is their different degree of better resistance to wear and deformation.

Slide rings of polyurethane normally provide higher friction but also a higher sealing ability than those of a PTFE material.

Groove edges

All groove edges are smoothed and rounded off to R = 0,1 to 0,2 mm.

Table 1

Designation codes for series G piston seals

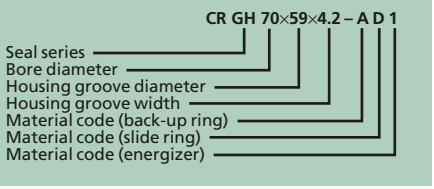

Table 2

Housing groove section

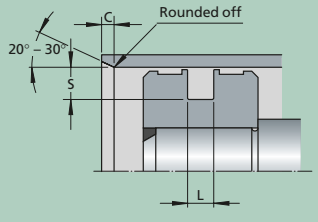

Groove width	Radial section ISO	Radial section non ISO	Axial length
L	S	S	C
mm			
2,2	2,5	2,45	3
3,2	3,75	3,65	5
4,2	5,5	5,35	7
6,3	7,75	7,55	10
8,1	10,5	10,25	12
8,1	12,25	12	12
9,5	14	13,65	15

rgab.ru Берг АБ bergab@ya.ru Тел. (495)-228-06-21, факс (495) 2

rgab.ru Берг АБ bergab@ya.ru Тел. (495)-228-06-21, факс (495) 2

Fig 1

Seal types of series G

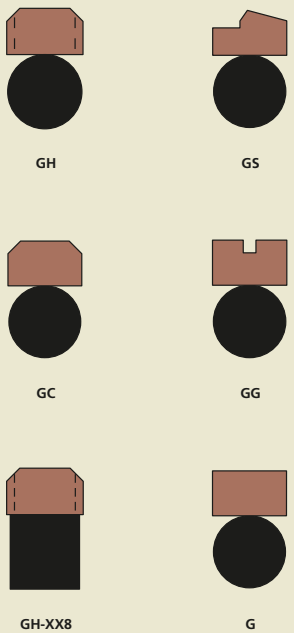

Table 3

Slide rings, material codes

Code	MS	Material type
AA	100	Unfilled PTFE (FDA approved)
AB	231	PTFE + low degree of metal oxide
AC	271	PTFE + polyoxybensoate (polymer)
AD	292	PTFE + bronze + molybdenum disulphide
AE	302	PTFE + carbon + graphite powder
AG	851	PTFE + carbon fibre
BK	426	PE-UHMW

Table 4

Rubber parts, material and design codes

Code	MS	Rubber type
1	N70	Nitrile rubber, 70° IRH
2	N84	Nitrile rubber, low temperature, 70° IRH
3	F75	Fluorocarbon rubber, 75° IRH
4	Q70	Silicone rubber, 70° IRH
5	E70	Ethylene-propylene rubber (EPDM), 70° IRH
6	HN80	Hydrogenated nitrile rubber, 80° IRH
7	N70	X-ring XR, nitrile rubber, 70° IRH
8	N70	Square ring, nitrile rubber, 70° IRH

rgab.ru Берг АБ bergab@ya.ru Тел. (495)-228-06-21, факс (495) 2

rgab.ru Берг АБ bergab@ya.ru Тел. (495)-228-06-21, факс (495) 2

Table **5**

Description and field of application of the slide ring seals

Type	Profile	Description	Application field
GH		Double-acting, notches and chamfers against the dynamic surface	Basic design for reciprocating movements
G		Double-acting, sharp edges, no notches	Appropriate for impure media
GC		Double-acting, chamfered against the dynamic surface	The chamfer provides improved protection against extrusion
GG		Double-acting, grooves in the slide surface	Improved sealing ability
GN		Notches	For rapid pressure changes
GR		Double-acting, chamfers, notches and grooves in the dynamic surface and a radius on the static side	Appropriate for rotating and turning applications
GH-XX8		Double-acting, square ring as a static sealing element	Provides a decreased surface pressure against the dynamic surface and an increased sealing ability
GS		Single-acting slide ring seal	Applications with high demands on sealing ability
GXS		Single-acting slide ring seal with a full-face back up ring	Designed to withstand high pressure

rgab.ru Берг АБ bergab@ya.ru Тел. (495)-228-06-21, факс (495) 2

rgab.ru Берг АБ bergab@ya.ru Тел. (495)-228-06-21, факс (495) 22

Table **6**

Choice of material

Medium	Material, contact surface	MS Code Seal	O-ring
Hydraulic oil Lubrication oil (mineral oil based)	Steel: min 33 HRC Chromed surface, cast iron	1) MS-292 (bronze filled) 2) MS-361 (glass fibre) 3) MS-426 PE-UHMW (max +80 °C)	MS-N70 MS-F75
	Stainless steel, aluminium, anodized or chromed bronze	1) MS-302 (carbon filled) 2) MS-851 (carbon fibre) 3) MS-426 PE-UHMW (max +80 °C)	
Water Water/glycol	Steel: min 33 HRC Chromed surface, cast iron, stainless steel, aluminium, anodized or chromed bronze	1) MS-302 (carbon filled) 2) MS-851 (carbon fibre) 3) MS-304 (carbon filled) 4) MS-426 PE-UHMW (max +80 °C)	MS-N70 MS-F75 MS-E70
Water/oil emulsion			MS-N70 MS-F75
Hot water/steam	Steel: min 33 HRC Chromed surface, cast iron, stainless steel, aluminium, anodized or chromed bronze	1) MS-302 (carbon filled) 2) MS-851 (carbon fibre) 3) MS-304 (carbon filled)	MS-E70
Air, lubricated service Air, unlubricated service	Steel: min 33 HRC Chromed surface, cast iron	1) MS-426 PE-UHMW (max +80 °C) 2) MS-361 (glass fibre) 3) MS-221, MS-231 (low-filled + colour pigment, only lubricated service)	MS-N70
	Stainless steel, aluminium, anodized or chromed bronze	1) MS-426 PE-UHMW (max +80 °C) 2) MS-302 (carbon filled) 3) MS-851 (carbon fibre) 4) MS-304 (carbon filled)	

2

rgab.ru Берг АБ bergab@ya.ru Тел. (495)-228-06-21, факс (495) 22

rgab.ru Берг АБ bergab@ya.ru Тел. (495)-228-06-21, факс (495) 22

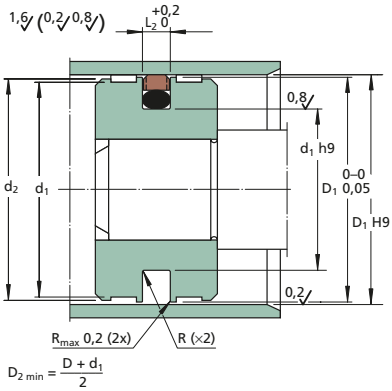

Type GH
Design with slide ring of bronze filled PTFE and O-ring of nitrile rubber.

Choose D_1 for the pressure range in question according to the tables. The housing dimensions and tolerances stated are applicable at working pressures up to 40 MPa.

Applications with higher pressures normally demand that D_1 is equal to D nominally and that D_1 and D are adjusted according to e.g. D_1 = f7 and D = H7.

Guide rings can therefore not be used in these applications.

In applications with operation conditions demanding a diametrical clearance nominally smaller than 0,4 mm (incl. the tolerance) a separate guide ring should be avoided.

See **Table 2**, **page 50**, for chamfer bore lead in.

Please contact our technical support for further information.

Dimensions							Designation	ISO 7425-1
D	d	L	D_1 at pressure (MPa) 0 – 16	(16) – 25	(25) – 40	R		
mm							–	
10	5,1	2,2	9,6	9,7	9,8	0,5	**CR GH 10×5×2.2-AD1**	
12	7,1	2,2	11,6	11,7	11,8	0,5	**CR GH 12×7×2.2-AD1**	
14	9,1	2,2	13,6	13,7	12,8	0,5	**CR GH 14×9×2.2-AD1**	
15	10,1	2,2	14,6	14,7	13,8	0,5	**CR GH 15×10×2.2-AD1**	
	7,5	3,2	14,6	14,7	13,8	0,5	**CR GH 15×7.5×3.2-AD1**	
16	11,1	2,2	15,6	15,7	15,8	0,5	**CR GH 16×11×2.2-AD1**	•
	8,5	3,2	15,6	15,7	15,8	0,5	**CR GH 16×8.5×3.2-AD1**	•
18	10,5	3,2	17,6	17,7	17,8	0,5	**CR GH 18×10.5×3.2-AD1**	
20	15,1	2,2	19,6	19,7	19,8	0,5	**CR GH 20×15×2.2-AD1**	•
	12,5	3,2	19,6	19,7	19,8	0,5	**CR GH 20×12.5×3.2-AD1**	•
22	14,5	3,2	21,6	21,7	21,8	0,5	**CR GH 22×14.5×3.2-AD1**	
25	17,5	3,2	24,6	24,7	24,8	0,5	**CR GH 25×17.5×3.2-AD1**	•
	14	4,2	24,5	24,6	24,7	0,5	**CR GH 25×14×4.2-AD1**	•
28	20,5	3,2	27,6	27,7	27,8	0,5	**CR GH 28×20.5×3.2-AD1**	
30	22,5	3,2	29,6	29,7	29,8	0,5	**CR GH 30×22.5×3.2-AD1**	
32	24,5	3,2	31,6	31,7	31,8	0,5	**CR GH 32×24.5×3.2-AD1**	•
	21	4,2	31,5	31,6	31,7	0,5	**CR GH 32×21×4.2-AD1**	•
35	27,5	3,2	34,6	34,7	34,8	0,5	**CR GH 35×27.5×3.2-AD1**	
36	28,5	3,2	35,6	35,7	35,8	0,5	**CR GH 36×28.5×3.2-AD1**	
	25	4,2	35,5	35,6	35,7	0,5	**CR GH 36×25×4.2-AD1**	
40	32,5	3,2	39,6	39,7	39,8	0,5	**CR GH 40×32.5×3.2-AD1**	•
	29	4,2	39,5	39,6	39,7	0,5	**CR GH 40×29×4.2-AD1**	•
45	37,5	3,2	44,6	44,7	44,8	0,5	**CR GH 45×37.5×3.2-AD1**	
	34	4,2	44,5	44,6	44,7	0,5	**CR GH 45×34×4.2-AD1**	
50	39	4,2	49,5	49,6	49,7	0,5	**CR GH 50×39×4.2-AD1**	•
	34,5	6,3	49,4	49,5	49,6	0,5	**CR GH 50×34.5×6.3-AD1**	•

rgab.ru Берг АБ bergab@ya.ru Тел. (495)-228-06-21, факс (495) 22

rgab.ru Берг АБ bergab@ya.ru Тел. (495)-228-06-21, факс (495) 2

Dimensions							Designation	ISO 7425-1
D	d	L	D_1 at pressure (MPa) 0 – 16	(16) – 25	(25) – 40	R		
mm							–	
55	44	4,2	54,5	54,6	54,7	0,5	**CR GH 55×44×4.2-AD1**	
56	45	4,2	55,5	55,6	55,7	0,5	**CR GH 56×45×4.2-AD1**	
60	49	4,2	59,5	59,6	59,7	0,5	**CR GH 60×49×4.2-AD1**	
63	52	4,2	62,5	62,6	62,7	0,5	**CR GH 63×52×4.2-AD1**	•
	47,5	6,3	62,4	62,5	62,6	0,5	**CR GH 63×47.5×6.3-AD1**	•
65	54	4,2	64,5	64,6	64,7	0,9	**CR GH 65×54×4.2-AD1**	
70	59	4,2	69,5	69,6	69,7	0,9	**CR GH 70×59×4.2-AD1**	
75	64	4,2	74,5	74,6	74,7	0,9	**CR GH 75×64×4.2-AD1**	
80	69	4,2	79,5	79,6	79,7	0,9	**CR GH 80×69×4.2-AD1**	•
	64,5	6,3	79,4	79,5	79,6	0,9	**CR GH 80×64.5×6.3-AD1**	•
85	74	4,2	84,5	84,6	84,7	0,9	**CR GH 85×74×4.2-AD1**	
	69,5	6,3	84,4	84,5	84,6	0,9	**CR GH 85×69.5×6.3-AD1**	
90	79	4,2	89,5	89,6	89,7	0,9	**CR GH 90×79×4.2-AD1**	
	74,5	6,3	89,4	89,5	89,6	0,9	**CR GH 90×74.5×6.3-AD1**	
95	84	4,2	94,5	94,6	94,7	0,9	**CR GH 95×84×4.2-AD1**	
	79,5	6,3	94,4	94,5	94,6	0,9	**CR GH 95×79.5×6.3-AD1**	
100	89	4,2	99,5	99,6	99,7	0,9	**CR GH 100×89×4.2-AD1**	•
	84,5	6,3	99,4	99,5	99,6	0,9	**CR GH 100×84.5×6.3-AD1**	•
105	89,5	6,3	104,4	104,5	104,6	0,9	**CR GH 105×89.5×6.3-AD1**	
110	94,5	6,3	109,4	109,5	109,6	0,9	**CR GH 110×94.5×6.3-AD1**	
115	99,5	6,3	114,4	114,5	114,6	0,9	**CR GH 115×99.5×6.3-AD1**	
120	104,5	6,3	119,4	119,5	119,6	0,9	**CR GH 120×104.5×6.3-AD1**	
125	109,5	6,3	124,4	124,5	124,6	0,9	**CR GH 125×109.5×6.3-AD1**	•
	104	8,1	124,2	124,4	124,5	0,9	**CR GH 125×104×8.1-AD1**	•

rgab.ru Берг АБ bergab@ya.ru Тел. (495)-228-06-21, факс (495) 2

rgab.ru Берг АБ bergab@ya.ru Тел. (495)-228-06-21, факс (495) 2

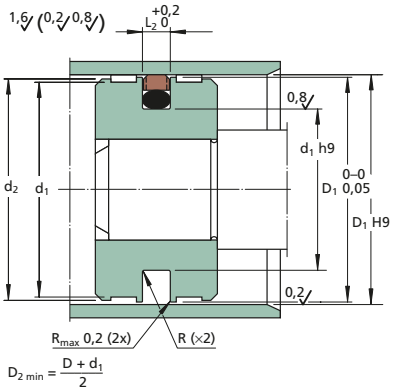

Type GH
Design with slide ring of bronze filled PTFE and O-ring of nitrile rubber.

Choose D_1 for the pressure range in question according to the tables. The housing dimensions and tolerances stated are applicable at working pressures up to 40 MPa.

Applications with higher pressures normally demand that D_1 is equal to D nominally and that D_1 and D are adjusted according to e.g. D_1 = f7 and D = H7.

Guide rings can therefore not be used in these applications.

In applications with operation conditions demanding a diametrical clearance nominally smaller than 0,4 mm (incl. the tolerance) a separate guide ring should be avoided.

See **Table 2**, **page 50**, for chamfer bore lead in.

Please contact our technical support for further information.

Dimensions							Designation	ISO 7425-1
D	d	L	D_1 at pressure (MPa) 0 – 16	(16) – 25	(25) – 40	R		
mm							–	
130	114,5	6,3	129,4	129,5	129,6	0,9	**CR GH 130×114.5×6.3-AD1**	
	109	8,1	129,2	129,4	129,5	0,9	**CR GH 130×109×8.1-AD1**	
135	119,5	6,3	134,4	134,5	134,6	0,9	**CR GH 135×119.5×6.3-AD1**	
	114	8,1	134,2	134,4	134,5	0,9	**CR GH 135×114×8.1-AD1**	
140	124,5	6,3	139,4	139,5	139,6	0,9	**CR GH 140×124.5×6.3-AD1**	
	119	8,1	139,2	139,4	139,5	0,9	**CR GH 140×119×8.1-AD1**	
145	129,5	6,3	144,4	144,5	144,6	0,9	**CR GH 145×129.5×6.3-AD1**	
	124	8,1	144,2	144,4	144,5	0,9	**CR GH 145×124×8.1-AD1**	
150	134,5	6,3	149,4	149,5	149,6	0,9	**CR GH 150×134.5×6.3-AD1**	
	129	8,1	149,2	149,4	149,5	0,9	**CR GH 150×129×8.1-AD1**	
155	139,5	6,3	154,4	154,5	154,6	0,9	**CR GH 155×139.5×6.3-AD1**	
	134	8,1	154,2	154,4	154,5	0,9	**CR GH 155×134×8.1-AD1**	
160	144,5	6,3	159,4	159,5	159,6	0,9	**CR GH 160×144.5×6.3-AD1**	•
	139	8,1	159,2	159,4	159,5	0,9	**CR GH 160×139×8.1-AD1**	•
165	149,5	6,3	164,4	164,5	164,6	0,9	**CR GH 165×149.5×6.3-AD1**	
	144	8,1	164,2	164,4	164,5	0,9	**CR GH 165×144×8.1-AD1**	
170	154,5	6,3	169,4	169,5	169,6	0,9	**CR GH 170×154.5×6.3-AD1**	
	149	8,1	169,2	169,4	169,5	0,9	**CR GH 170×149×8.1-AD1**	
175	159,5	6,3	174,4	174,5	174,6	0,9	**CR GH 175×159.5×6.3-AD1**	
	154	8,1	174,2	174,4	174,5	0,9	**CR GH 175×154×8.1-AD1**	
180	164,5	6,3	179,4	179,5	179,6	0,9	**CR GH 180×164.5×6.3-AD1**	
	159	8,1	179,2	179,4	179,5	0,9	**CR GH 180×159×8.1-AD1**	
185	169,5	6,3	184,4	184,5	184,6	0,9	**CR GH 185×169.5×6.3-AD1**	
	164	8,1	184,2	184,4	184,5	0,9	**CR GH 185×164×8.1-AD1**	
190	174,5	6,3	189,4	189,5	189,6	0,9	**CR GH 190×174.5×6.3-AD1**	
	169	8,1	189,2	189,4	189,5	0,9	**CR GH 190×169×8.1-AD1**	
195	179,5	6,3	194,4	194,5	194,6	0,9	**CR GH 195×179.5×6.3-AD1**	
	174	8,1	194,2	194,4	194,5	0,9	**CR GH 195×174×8.1-AD1**	

rgab.ru Берг АБ bergab@ya.ru Тел. (495)-228-06-21, факс (495) 2

rgab.ru Берг АБ bergab@ya.ru Тел. (495)-228-06-21, факс (495) 2

Dimensions							Designation	ISO 7425-1
D	d	L	D_1 at pressure (MPa) 0 – 16	(16) – 25	(25) – 40	R		
mm							–	
200	184,5	6,3	199,4	199,5	199,6	0,9	**CR GH 200×184.5×6.3-AD1**	•
	179	8,1	199,2	199,4	199,5	0,9	**CR GH 200×179×8.1-AD1**	•
210	194,5	6,3	209,4	209,5	209,6	0,9	**CR GH 210×194.5×6.3-AD1**	
	189	8,1	209,2	209,4	209,5	0,9	**CR GH 210×189×8.1-AD1**	
220	204,5	6,3	219,4	219,5	219,6	0,9	**CR GH 220×204.5×6.3-AD1**	
	199	8,1	219,2	219,4	219,5	0,9	**CR GH 220×199×8.1-AD1**	
230	214,5	6,3	229,4	229,5	229,6	0,9	**CR GH 230×214.5×6.3-AD1**	
	209	8,1	229,2	229,4	229,5	0,9	**CR GH 230×209×8.1-AD1**	
240	224,5	6,3	239,4	239,5	239,6	0,9	**CR GH 240×224.5×6.3-AD1**	
	219	8,1	239,2	239,4	239,5	0,9	**CR GH 240×219×8.1-AD1**	
250	229	8,1	249,2	249,4	249,5	0,9	**CR GH 250×229×8.1-AD1**	•
	225,5	8,1	249,2	249,4	249,5	0,9	**CR GH 250×225.5×8.1-AD1**	•
260	239	8,1	259,2	259,4	259,5	0,9	**CR GH 260×239×8.1-AD1**	
	235,5	8,1	259,2	259,4	259,5	0,9	**CR GH 260×235.5×8.1-AD1**	
270	249	8,1	269,2	269,4	269,5	0,9	**CR GH 270×249×8.1-AD1**	
	245,5	8,1	269,2	269,4	269,5	0,9	**CR GH 270×245.5×8.1-AD1**	
280	259	8,1	279,2	279,4	279,5	0,9	**CR GH 280×259×8.1-AD1**	
	255,5	8,1	279,2	279,4	279,5	0,9	**CR GH 280×255.5×8.1-AD1**	
290	269	8,1	289,2	289,4	289,5	0,9	**CR GH 290×269×8.1-AD1**	
	265,5	8,1	289,2	289,4	289,5	0,9	**CR GH 290×265.5×8.1-AD1**	
300	279	8,1	299,2	299,4	299,5	0,9	**CR GH 300×279×8.1-AD1**	
	275,5	8,1	299,2	299,4	299,5	0,9	**CR GH 300×275.5×8.1-AD1**	
310	289	8,1	309,2	309,4	309,5	0,9	**CR GH 310×289×8.1-AD1**	
	285,5	8,1	309,2	309,4	309,5	0,9	**CR GH 310×285.5×8.1-AD1**	
320	299	8,1	319,2	319,4	319,5	0,9	**CR GH 320×299×8.1-AD1**	•
	295,5	8,1	319,2	319,4	319,5	0,9	**CR GH 320×295.5×8.1-AD1**	•
330	309	8,1	329,2	329,4	329,5	0,9	**CR GH 330×309×8.1-AD1**	
	305,5	8,1	329,2	329,4	329,5	0,9	**CR GH 330×305.5×8.1-AD1**	

rgab.ru Берг АБ bergab@ya.ru Тел. (495)-228-06-21, факс (495) 2

rgab.ru Берг АБ bergab@ya.ru Тел. (495)-228-06-21, факс (495) 2

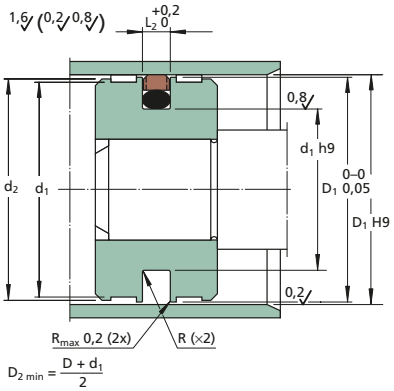

Type GH
Design with slide ring of bronze filled PTFE and O-ring of nitrile rubber.

Choose D_1 for the pressure range in question according to the tables. The housing dimensions and tolerances stated are applicable at working pressures up to 40 MPa.

Applications with higher pressures normally demand that D_1 is equal to D nominally and that D_1 and D are adjusted according to e.g. D_1 = f7 and D = H7.

Guide rings can therefore not be used in these applications.

In applications with operation conditions demanding a diametrical clearance nominally smaller than 0,4 mm (incl. the tolerance) a separate guide ring should be avoided.

See **Table 2**, **page 50**, for chamfer bore lead in.

Please contact our technical support for further information.

Dimensions							Designation	ISO 7425-1
D	d	L	D_1 at pressure (MPa) 0 – 16	(16) – 25	(25) – 40	R		
mm							–	
340	319	8,1	339,2	339,4	339,5	0,9	**CR GH 340×319×8.1-AD1**	
	315,5	8,1	339,2	339,4	339,5	0,9	**CR GH 340×315.5×8.1-AD1**	
350	329	8,1	349,2	349,4	349,5	0,9	**CR GH 350×329×8.1-AD1**	
	325,5	8,1	349,2	349,4	349,5	0,9	**CR GH 350×325.5×8.1-AD1**	
360	339	8,1	359,2	359,4	359,5	0,9	**CR GH 360×339×8.1-AD1**	
	335,5	8,1	359,2	359,4	359,5	0,9	**CR GH 360×335.5×8.1-AD1**	
370	349	8,1	369,2	369,4	369,5	0,9	**CR GH 370×349×8.1-AD1**	
	345,5	8,1	369,2	369,4	369,5	0,9	**CR GH 370×345.5×8.1-AD1**	
380	359	8,1	379,2	379,4	379,5	0,9	**CR GH 380×359×8.1-AD1**	
	355,5	8,1	379,2	379,4	379,5	0,9	**CR GH 380×355.5×8.1-AD1**	
390	369	8,1	389,2	389,4	389,5	0,9	**CR GH 390×369×8.1-AD1**	
	365,5	8,1	389,2	389,4	389,5	0,9	**CR GH 390×365.5×8.1-AD1**	
400	375,5	8,1	399,2	399,4	399,5	0,9	**CR GH 400×375.5×8.1-AD1**	•
410	385,5	8,1	409,2	409,4	409,5	0,9	**CR GH 410×385.5×8.1-AD1**	
420	395,5	8,1	419,2	419,4	419,5	0,9	**CR GH 420×395.5×8.1-AD1**	
430	405,5	8,1	429,2	429,4	429,5	0,9	**CR GH 430×405.5×8.1-AD1**	
440	415,5	8,1	439,2	439,4	439,5	0,9	**CR GH 440×415.5×8.1-AD1**	
450	425,5	8,1	449,2	449,4	449,5	0,9	**CR GH 450×425.5×8.1-AD1**	
460	435,5	8,1	459,2	459,4	459,5	0,9	**CR GH 460×435.5×8.1-AD1**	
470	445,5	8,1	469,2	469,4	469,5	0,9	**CR GH 470×445.5×8.1-AD1**	
480	455,5	8,1	479,2	479,4	479,5	0,9	**CR GH 480×455.5×8.1-AD1**	
490	465,5	8,1	489,2	489,4	489,5	0,9	**CR GH 490×465.5×8.1-AD1**	
500	475,5	8,1	499,2	499,4	499,5	0,9	**CR GH 500×475.5×8.1-AD1**	•
510	485,5	8,1	509,2	509,4	509,5	0,9	**CR GH 510×485.5×8.1-AD1**	

rgab.ru Берг АБ bergab@ya.ru Тел. (495)-228-06-21, факс (495) 2

rgab.ru Берг АБ bergab@ya.ru Тел. (495)-228-06-21, факс (495) 22

Dimensions							Designation	ISO 7425-1
D	d	L	D_1 at pressure (MPa) 0 – 16	(16) – 25	(25) – 40	R		
mm							–	
520	495,5	8,1	519,2	519,4	519,5	0,9	**CR GH 520×495.5×8.1-AD1**	
530	505,5	8,1	529,2	529,4	529,5	0,9	**CR GH 530×505.5×8.1-AD1**	
540	515,5	8,1	539,2	539,4	539,5	0,9	**CR GH 540×515.5×8.1-AD1**	
545	520,5	8,1	544,2	544,4	544,5	0,9	**CR GH 545×520.5×8.1-AD1**	
550	525,5	8,1	549,2	549,4	549,5	0,9	**CR GH 550×525.5×8.1-AD1**	
560	535,5	8,1	559,2	559,4	559,5	0,9	**CR GH 560×535.5×8.1-AD1**	
570	545,5	8,1	569,2	569,4	569,5	0,9	**CR GH 570×545.5×8.1-AD1**	
580	555,5	8,1	579,2	579,4	579,5	0,9	**CR GH 580×555.5×8.1-AD1**	
590	565,5	8,1	589,2	589,4	589,5	0,9	**CR GH 590×565.5×8.1-AD1**	
600	575,5	8,1	599,2	599,4	599,5	0,9	**CR GH 600×575.5×8.1-AD1**	
610	585,5	8,1	609,2	609,4	609,5	0,9	**CR GH 610×585.5×8.1-AD1**	
620	595,5	8,1	619,2	619,4	619,5	0,9	**CR GH 620×595.5×8.1-AD1**	
630	605,5	8,1	629,2	629,4	629,5	0,9	**CR GH 630×605.5×8.1-AD1**	
640	615,5	8,1	639,2	639,4	639,5	0,9	**CR GH 640×615.5×8.1-AD1**	
645	620,5	8,1	644,2	644,4	644,5	0,9	**CR GH 645×620.5×8.1-AD1**	
650	625,5	8,1	649,2	649,4	649,5	0,9	**CR GH 650×625.5×8.1-AD1**	
660	635,5	8,1	659,2	659,4	659,5	0,9	**CR GH 660×635.5×8.1-AD1**	
670	642	9,5	669,2	669,4	669,5	0,9	**CR GH 670×642×9.5-AD1**	
680	652	9,5	679,2	679,4	679,5	0,9	**CR GH 680×652×9.5-AD1**	
695	667	9,5	694,2	694,4	694,5	0,9	**CR GH 695×667×9.5-AD1**	
700	672	9,5	699,2	699,4	699,5	0,9	**CR GH 700×672×9.5-AD1**	

rgab.ru Берг АБ bergab@ya.ru Тел. (495)-228-06-21, факс (495) 22

rgab.ru Берг АБ bergab@ya.ru Тел. (495)-228-06-21, факс (495) 2

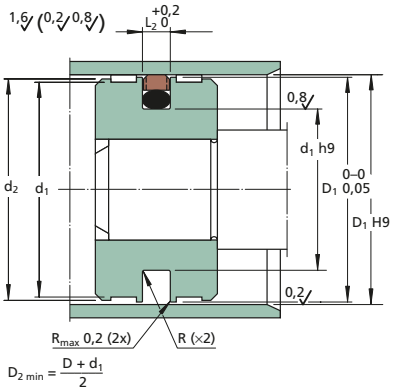

Type GH
Design with slide ring of bronze filled PTFE and O-ring of nitrile rubber.

Choose D_1 for the pressure range in question according to the tables. The housing dimensions and tolerances stated are applicable at working pressures up to 40 MPa.

Applications with higher pressures normally demand that D_1 is equal to D nominally and that D_1 and D are adjusted according to e.g. D_1 = f7 and D = H7.

Guide rings can therefore not be used in these applications.

In applications with operation conditions demanding a diametrical clearance nominally smaller than 0,4 mm (incl. the tolerance) a separate guide ring should be avoided.

See **Table 2**, **page 50**, for chamfer bore lead in.

Please contact our technical support for further information.

Dimensions							Designation	ISO 7425-1
D	d	L	D_1 at pressure (MPa) 0 – 16	(16) – 25	(25) – 40	R		
mm							–	
720	692	9,5	719,2	719,4	719,5	0,9	**CR GH 720×692×9.5-AD1**	
725	697	9,5	724,2	724,4	724,5	0,9	**CR GH 725×697×9.5-AD1**	
740	712	9,5	739,2	739,4	739,5	0,9	**CR GH 740×712×9.5-AD1**	
750	722	9,5	749,2	749,4	749,5	0,9	**CR GH 750×722×9.5-AD1**	
760	732	9,5	759,2	759,4	759,5	0,9	**CR GH 760×732×9.5-AD1**	
770	742	9,5	769,2	769,4	769,5	0,9	**CR GH 770×742×9.5-AD1**	
775	747	9,5	774,2	774,4	774,5	0,9	**CR GH 775×747×9.5-AD1**	
780	752	9,5	779,2	779,4	779,5	0,9	**CR GH 780×752×9.5-AD1**	
790	762	9,5	789,2	789,4	789,5	0,9	**CR GH 790×762×9.5-AD1**	
800	772	9,5	799,2	799,4	799,5	0,9	**CR GH 800×772×9.5-AD1**	
820	792	9,5	819,2	819,4	819,5	0,9	**CR GH 820×792×9.5-AD1**	
825	797	9,5	824,2	824,4	824,5	0,9	**CR GH 825×797×9.5-AD1**	
840	812	9,5	839,2	839,4	839,5	0,9	**CR GH 840×812×9.5-AD1**	
860	832	9,5	859,2	859,4	859,5	0,9	**CR GH 860×832×9.5-AD1**	
880	852	9,5	879,2	879,4	879,5	0,9	**CR GH 880×852×9.5-AD1**	
885	857	9,5	884,2	884,4	884,5	0,9	**CR GH 885×857×9.5-AD1**	
900	872	9,5	899,2	899,4	899,5	0,9	**CR GH 900×872×9.5-AD1**	
915	887	9,5	914,2	914,4	914,5	0,9	**CR GH 915×887×9.5-AD1**	
920	892	9,5	919,2	919,4	919,5	0,9	**CR GH 920×892×9.5-AD1**	
940	912	9,5	939,2	939,4	939,5	0,9	**CR GH 940×912×9.5-AD1**	
960	932	9,5	959,2	959,4	959,5	0,9	**CR GH 960×932×9.5-AD1**	

rgab.ru Берг АБ bergab@ya.ru Тел. (495)-228-06-21, факс (495) 2

rgab.ru Берг АБ bergab@ya.ru Тел. (495)-228-06-21, факс (495) 2

Dimensions							Designation	ISO 7425-1
D	d	L	D_1 at pressure (MPa) 0 – 16	(16) – 25	(25) – 40	R		
mm							–	
980	952	9,5	979,2	979,4	979,5	0,9	**CR GH 980×952×9.5-AD1**	
1 000	972	9,5	999,2	999,4	999,5	0,9	**CR GH 1000×972×9.5-AD1**	
1 010	982	9,5	1 009,2	1 009,4	1 009,5	0,9	**CR GH 1010×982×9.5-AD1**	
1 050	1 022	9,5	1 049,2	1 049,4	1 049,5	0,9	**CR GH 1050×1022×9.5-AD1**	
1 100	1 072	9,5	1 099,2	1 099,4	1 099,5	0,9	**CR GH 1100×1072×9.5-AD1**	

rgab.ru Берг АБ bergab@ya.ru Тел. (495)-228-06-21, факс (495) 2

rgab.ru Берг АБ bergab@ya.ru Тел. (495)-228-06-21, факс (495) 2

Piston seals series GL

SEALPOOL slide ring seals are designated according to a system which clearly states the seal series, type, dynamic sealing diameter (bore), nominal housing groove diameter, housing groove width and material, see **Table 1**.

Table **1**

Designation codes for series GL piston seals

CR GL 70×60×4 – AA 1

- Seal series
- Bore diameter
- Housing groove diameter
- Housing groove width
- Material code (slide ring)
- Material code and design code (rubber part)

Seal series/type

All types of series GL consist of a dynamically sealing slide ring of PTFE and a static, elastomeric part which also functions as an interference element, see **fig 1**. Type GL is designed for low pressure hydraulics as well as a pneumatic seal. The basic design GL is manufactured of unfilled PTFE (MS- 100) and has an O-ring of nitrile rubber 70° IRH. Type GLC has chamfered sealing edges on the dynamic side, which in some cases results in improved sealing ability. The chamfers also strengthens the edges and reduces the risk of extrusion. Type GLG is designed with grooves in the dynamic sealing surface with improved sealing ability. Please see **Table 2** for housing dimensions.

Seal materials

The choice of seal materials always includes a compromise between advantages and disadvantages. Slide ring seals can be delivered with slide rings of several different PTFE materials and of polyurethane or polyethylene. The materials which we most often suggest are stated in **Table 3** and **4**.

There is a large number of different PTFE materials with variants of fillers, e.g. glass fibre, carbon, graphite, molybdenum disulphide, metal oxides, polymeric fillers and combinations of different fillers. Each possesses different properties appropriate for different applications and working conditions.

Unfilled PTFE provides most often a lower friction than a filled PTFE material and the lowest degree of wear of the cylinder tube surface. However, its own resistance to wear and deformation under load is limited.

Common for all filled PTFE materials is their different degree of better resistance to wear and deformation.

Slide rings of polyurethane normally provide higher friction but also a higher sealing ability than those of a PTFE material.

Fig **1**

Seal types of series GL

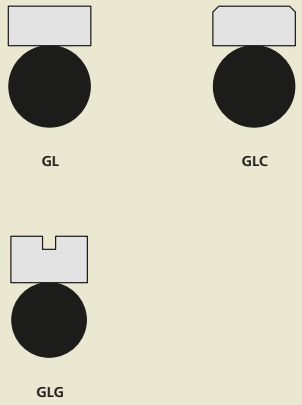

rgab.ru Берг АБ bergab@ya.ru Тел. (495)-228-06-21, факс (495) 2

rgab.ru Берг АБ bergab@ya.ru Тел. (495)-228-06-21, факс (495) 2

Table 2

Housing groove section

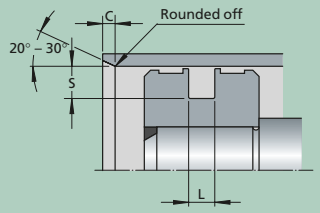

Groove width	Radial section	Axial length
L	S	C
mm		
2	2	3
2,8	3	3
3	3,5	5
3,5	4	7
4	5	7
5,8	7,25	10
6,2	8	10
7,5	9,5	12

Table 3

Slide rings, material codes

Code	MS	Material type
AA	100	Unfilled PTFE (FDA approved)
AB	231	PTFE + low degree of metal oxide
AC	271	PTFE + polyoxybensoate (polymer)
AD	292	PTFE + bronze + molybdenum disulphide
AE	302	PTFE + carbon + graphite powder
AG	851	PTFE + carbon fibre
BK	426	PE-UHMW

Table 4

Rubber parts, material and design codes

Code	MS	Rubber type
1	N70	Nitrile rubber, 70° IRH
2	N84	Nitrile rubber, low temperature, 70° IRH
3	F75	Fluorocarbon rubber, 75° IRH
4	Q70	Silicone rubber, 70° IRH
5	E70	Ethylene-propylene rubber (EPDM), 70° IRH
6	HN80	Hydrogenated nitrile rubber, 80° IRH
7	N70	X-ring XR, nitrile rubber, 70° IRH
8	N70	Square ring, nitrile rubber, 70° IRH

rgab.ru Берг АБ bergab@ya.ru Тел. (495)-228-06-21, факс (495) 2

rgab.ru Берг АБ bergab@ya.ru Тел. (495)-228-06-21, факс (495) 2

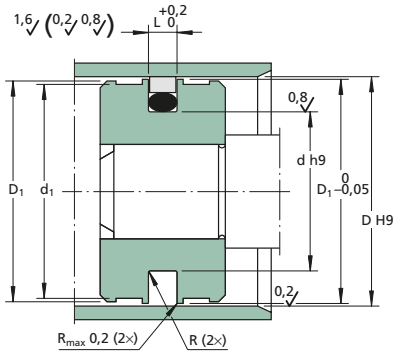

$$D_{2\,min} = \frac{D + d_1}{2}$$

Type GL
Regular design with slide ring of unfilled PTFE and O-ring of nitrile rubber.
The housing dimensions and tolerances stated are applicable at working pressures of up to 20 MPa.
Applications with higher pressure normally demand a slide ring of a PTFE material with a filler, e.g. carbon or bronze.
Please see **Table 2, page 63**, for seat groove and lead-in chamfer.

Dimensions						Designation
D	d	L	D_1 at pressure (MPa) 16 – 25	(25) – 40	R	
mm						–
10	6	2	9,8	9,9	0,2	**CR GL 10×6×2-AA1**
12	8	2	11,8	11,9	0,2	**CR GL 12×8×2-AA1**
14	8	2,8	13,8	13,9	0,3	**CR GL 14×8×2.8-AA1**
	10	2	13,8	13,9	0,2	**CR GL 14×10×2-AA1**
15	9	2,8	14,8	14,9	0,3	**CR GL 15×9×2.8-AA1**
	11	2	14,8	14,9	0,2	**CR GL 15×11×2-AA1**
16	10	2,8	15,8	15,9	0,3	**CR GL 16×10×2.8-AA1**
	12	2	15,8	15,9	0,2	**CR GL 16×12×2-AA1**
18	11	3	17,7	17,8	0,3	**CR GL 18×11×3-AA1**
	12	2,8	17,8	17,9	0,3	**CR GL 18×12×2.8-AA1**
	14	2	17,8	17,9	0,2	**CR GL 18×14×2-AA1**
20	13	3	19,7	19,8	0,3	**CR GL 20×13×3-AA1**
	14	2,8	19,8	19,9	0,3	**CR GL 20×14×2.8-AA1**
	16	2	19,8	19,9	0,2	**CR GL 20×16×2-AA1**
22	15	3	21,7	21,8	0,3	**CR GL 22×15×3-AA1**
	16	2,8	21,8	21,9	0,3	**CR GL 22×16×2.8-AA1**
	18	2	21,8	21,9	0,2	**CR GL 22×18×2-AA1**
25	18	3	24,7	24,8	0,3	**CR GL 25×18×3-AA1**
	19	2,8	24,8	24,9	0,3	**CR GL 25×19×2.8-AA1**
	21	2	24,8	24,9	0,2	**CR GL 25×21×2-AA1**
28	20	3,5	27,7	27,8	0,5	**CR GL 28×20×3.5-AA1**
	21	3	27,7	27,8	0,3	**CR GL 28×21×3-AA1**
	22	2,8	27,8	27,9	0,3	**CR GL 28×22×2.8-AA1**
	24	2	27,8	27,9	0,2	**CR GL 28×24×2-AA1**
30	22	3,5	29,7	29,8	0,5	**CR GL 30×22×3.5-AA1**
	23	3	29,7	29,8	0,3	**CR GL 30×23×3-AA1**
	24	2,8	29,8	29,9	0,3	**CR GL 30×24×2.8-AA1**
32	24	3,5	31,7	31,8	0,5	**CR GL 32×24×3.5-AA1**
	25	3	31,7	31,8	0,3	**CR GL 32×25×3-AA1**
	26	2,8	31,8	31,9	0,3	**CR GL 32×26×2.8-AA1**

rgab.ru Берг АБ bergab@ya.ru Тел. (495)-228-06-21, факс (495) 2

rgab.ru Берг АБ bergab@ya.ru Тел. (495)-228-06-21, факс (495) 2

Dimensions						Designation
D	d	L	D_1 at pressure (MPa) 16 – 25	(25) – 40	R	
mm						–
35	27	3,5	34,7	34,8	0,5	**CR GL 35×27×3.5-AA1**
	28	3	34,7	34,8	0,3	**CR GL 35×28×3-AA1**
36	28	3,5	35,7	35,8	0,5	**CR GL 36×28×3.5-AA1**
	29	3	35,7	35,8	0,3	**CR GL 36×29×3-AA1**
40	33	3	39,7	39,8	0,3	**CR GL 40×33×3-AA1**
45	37	3,5	44,7	44,8	0,5	**CR GL 45×37×3.5-AA1**
46	38	3,5	45,7	45,8	0,5	**CR GL 46×38×3.5-AA1**
50	42	3,5	49,7	49,8	0,5	**CR GL 50×42×3.5-AA1**
55	45	4	54,6	54,7	0,5	**CR GL 55×45×4-AA1**
	47	3,5	54,7	54,8	0,5	**CR GL 55×47×3.5-AA1**
57	49	3,5	56,7	56,8	0,5	**CR GL 57×49×3.5-AA1**
60	50	4	59,6	59,7	0,5	**CR GL 60×50×4-AA1**
	52	3,5	59,7	59,8	0,5	**CR GL 60×52×3.5-AA1**
63	53	4	62,6	62,7	0,5	**CR GL 63×53×4-AA1**
	55	3,5	62,7	62,8	0,5	**CR GL 63×55×3.5-AA1**
65	55	4	64,6	64,7	0,5	**CR GL 65×55×4-AA1**
	57	3,5	64,7	64,8	0,5	**CR GL 65×57×3.5-AA1**
70	60	4	69,6	69,7	0,5	**CR GL 70×60×4-AA1**
	62	3,5	69,7	69,8	0,5	**CR GL 70×62×3.5-AA1**
75	65	4	74,6	74,7	0,5	**CR GL 75×65×4-AA1**
	67	3,5	74,7	74,8	0,5	**CR GL 75×67×3.5-AA1**
80	70	4	79,6	79,7	0,5	**CR GL 80×70×4-AA1**
	72	3,5	79,7	79,8	0,5	**CR GL 80×72×3.5-AA1**
85	70,5	5,8	84,4	84,6	0,7	**CR GL 85×70.5×5.8-AA1**
	75	4	84,6	84,7	0,5	**CR GL 85×75×4-AA1**
90	75,5	5,8	89,4	89,6	0,7	**CR GL 90×75.5×5.8-AA1**
	80	4	89,6	89,7	0,5	**CR GL 90×80×4-AA1**

rgab.ru Берг АБ bergab@ya.ru Тел. (495)-228-06-21, факс (495) 2

rgab.ru Берг АБ bergab@ya.ru Тел. (495)-228-06-21, факс (495) 2

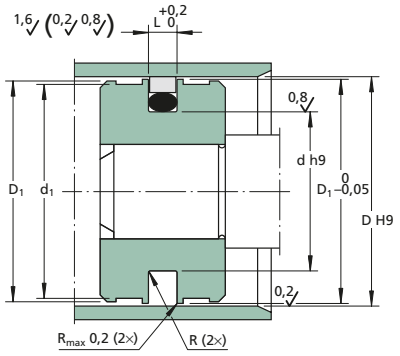

$$D_{2\,min} = \frac{D + d_1}{2}$$

Type GL
Regular design with slide ring of unfilled PTFE and O-ring of nitrile rubber.
The housing dimensions and tolerances stated are applicable at working pressures of up to 20 MPa.
Applications with higher pressure normally demand a slide ring of a PTFE material with a filler, e.g. carbon or bronze.
Please see **Table 2, page 63**, for seat groove and lead-in chamfer.

Dimensions						**Designation**
D	d	L	D_1 at pressure (MPa) 16 – 25	(25) – 40	R	
mm						–
95	80,5	5,8	94,4	94,6	0,7	**CR GL 95×80.5×5.8-AA1**
98	85	4	94,6	94,7	0,5	**CR GL 95×85×4-AA1**
100	85,5	5,8	99,4	99,6	0,7	**CR GL 100×85.5×5.8-AA1**
	90	4	99,6	99,7	0,5	**CR GL 100×90×4-AA1**
105	90,5	5,8	104,4	104,6	0,7	**CR GL 105×90.5×5.8-AA1**
	95	4	104,6	104,7	0,5	**CR GL 105×95×4-AA1**
110	95,5	5,8	109,4	109,6	0,7	**CR GL 110×95.5×5.8-AA1**
	100	4	109,6	109,7	0,5	**CR GL 110×100×4-AA1**
115	100,5	5,8	114,4	114,6	0,7	**CR GL 115×100.5×5.8-AA1**
	105	4	114,6	114,7	0,5	**CR GL 115×105×4-AA1**
120	110	4	119,6	119,7	0,5	**CR GL 120×110×4-AA1**
	104	6,2	119,4	119,6	0,7	**CR GL 120×104×6.2-AA1**
	105,5	5,8	119,4	119,6	0,7	**CR GL 120×105.5×5.8-AA1**
125	109	6,2	124,4	124,6	0,7	**CR GL 125×109×6.2-AA1**
	110,5	5,8	124,4	124,6	0,7	**CR GL 125×110.5×5.8-AA1**
130	114	6,2	129,4	129,6	0,7	**CR GL 130×114×6.2-AA1**
	115,5	5,8	129,4	129,6	0,7	**CR GL 130×115.5×5.5-AA1**
135	119	6,2	134,4	134,6	0,7	**CR GL 135×119×6.2-AA1**
	120,5	5,8	134,4	134,6	0,7	**CR GL 135×120.5×5.8-AA1**
140	124	6,2	139,4	139,6	0,7	**CR GL 140×124×6.2-AA1**
	125,5	5,8	139,4	139,6	0,7	**CR GL 140×125.5×5.8-AA1**
145	129	6,2	144,4	144,6	0,7	**CR GL 145×129×6.2-AA1**
	130,5	5,8	144,4	144,6	0,7	**CR GL 145×130.5×5.8-AA1**
150	134	6,2	149,4	149,6	0,7	**CR GL 150×134×6.2-AA1**
	135,5	5,8	149,4	149,6	0,7	**CR GL 150×135.5×5.8-AA1**
155	139	6,2	154,4	154,6	0,7	**CR GL 155×139×6.2-AA1**
	140,5	5,8	154,4	154,6	0,7	**CR GL 155×140.5×5.8-AA1**
160	144	6,2	159,4	159,6	0,7	**CR GL 160×144×6.2-AA1**

rgab.ru Берг АБ bergab@ya.ru Тел. (495)-228-06-21, факс (495) 2

rgab.ru Берг АБ bergab@ya.ru Тел. (495)-228-06-21, факс (495) 2

Dimensions						Designation
D	d	L	D_1 at pressure (MPa) 16 – 25	(25) – 40	R	
mm						–
165	149	6,2	164,4	164,6	0,7	**CR GL 165×149×6.2-AA1**
170	154	6,2	169,4	169,6	0,7	**CR GL 170×154×6.2-AA1**
175	159	6,2	174,4	174,6	0,7	**CR GL 175×159×6.2-AA1**
180	164	6,2	179,4	179,6	0,7	**CR GL 180×164×6.2-AA1**
185	166	7,5	184,3	184,5	1	**CR GL 185×166×7.5-AA1**
	169	6,2	184,4	184,6	0,7	**CR GL 185×169×6.2-AA1**
190	171	7,5	189,3	189,5	1	**CR GL 190×171×7.5-AA1**
	174	6,2	189,4	189,6	0,7	**CR GL 190×174×6.2-AA1**
195	176	7,5	194,3	194,5	1	**CR GL 195×176×7.5-AA1**
	179	6,2	194,4	194,6	0,7	**CR GL 195×179×6.2-AA1**
200	181	7,5	199,3	199,5	1	**CR GL 200×181×7.5-AA1**
	184	6,2	199,4	199,6	0,7	**CR GL 200×184×6.2-AA1**
210	191	7,5	209,3	209,5	1	**CR GL 210×191×7.5-AA1**
	194	6,2	209,4	209,6	0,7	**CR GL 210×194×6.2-AA1**
220	201	7,5	219,3	219,5	1	**CR GL 220×201×7.5-AA1**
	204	6,2	219,4	219,6	0,7	**CR GL 220×204×6.2-AA1**
230	211	7,5	229,3	229,5	1	**CR GL 230×211×7.5-AA1**
	214	6,2	229,4	229,6	0,7	**CR GL 230×214×6.2-AA1**
240	221	7,5	239,3	239,5	1	**CR GL 240×221×7.5-AA1**
250	231	7,5	249,3	249,5	1	**CR GL 250×231×7.5-AA1**
260	241	7,5	259,3	259,5	1	**CR GL 260×241×7.5-AA1**
270	251	7,5	269,3	269,5	1	**CR GL 270×251×7.5-AA1**
280	261	7,5	279,3	279,5	1	**CR GL 280×261×7.5-AA1**
290	271	7,5	289,3	289,5	1	**CR GL 290×271×7.5-AA1**
300	281	7,5	299,3	299,5	1	**CR GL 300×281×7.5-AA1**

rgab.ru Берг АБ bergab@ya.ru Тел. (495)-228-06-21, факс (495) 2

rgab.ru Берг АБ bergab@ya.ru Тел. (495)-228-06-21, факс (495) 2

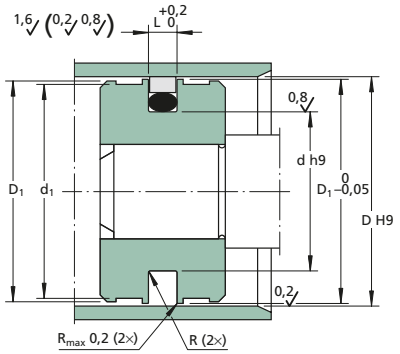

$$D_{2\,min} = \frac{D + d_1}{2}$$

Type GL
Regular design with slide ring of unfilled PTFE and O-ring of nitrile rubber.
The housing dimensions and tolerances stated are applicable at working pressures of up to 20 MPa.
Applications with higher pressure normally demand a slide ring of a PTFE material with a filler, e.g. carbon or bronze.
Please see **Table 2, page 63**, for seat groove and lead-in chamfer.

Dimensions						**Designation**
D	d	L	D_1 at pressure (MPa) 16 – 25	(25) – 40	R	
mm						–
310	291	7,5	309,3	309,5	1	**CR GL 310×291×7.5-AA1**
320	301	7,5	319,3	319,5	1	**CR GL 320×301×7.5-AA1**
330	311	7,5	329,3	329,5	1	**CR GL 330×311×7.5-AA1**
340	321	7,5	339,3	339,5	1	**CR GL 340×321×7.5-AA1**
350	331	7,5	349,3	349,5	1	**CR GL 350×331×7.5-AA1**
360	341	7,5	359,3	359,5	1	**CR GL 360×341×7.5-AA1**
370	351	7,5	369,3	369,5	1	**CR GL 370×351×7.5-AA1**
380	361	7,5	379,3	379,5	1	**CR GL 380×361×7.5-AA1**
390	371	7,5	389,3	389,5	1	**CR GL 390×371×7.5-AA1**
400	381	7,5	399,3	399,5	1	**CR GL 400×381×7.5-AA1**
410	391	7,5	409,3	409,5	1	**CR GL 410×391×7.5-AA1**
420	401	7,5	419,3	419,5	1	**CR GL 420×401×7.5-AA1**
430	411	7,5	429,3	429,5	1	**CR GL 430×411×7.5-AA1**
440	421	7,5	439,3	439,5	1	**CR GL 440×421×7.5-AA1**
450	431	7,5	449,3	449,5	1	**CR GL 450×431×7.5-AA1**
460	441	7,5	459,3	459,5	1	**CR GL 460×441×7.5-AA1**
470	451	7,5	469,3	469,5	1	**CR GL 470×451×7.5-AA1**
480	461	7,5	479,3	479,5	1	**CR GL 480×461×7.5-AA1**
490	471	7,5	489,3	489,5	1	**CR GL 490×471×7.5-AA1**
500	481	7,5	499,3	499,5	1	**CR GL 500×481×7.5-AA1**
510	491	7,5	509,3	509,5	1	**CR GL 510×491×7.5-AA1**

rgab.ru Берг АБ bergab@ya.ru Тел. (495)-228-06-21, факс (495) 2

rgab.ru Берг АБ bergab@ya.ru Тел. (495)-228-06-21, факс (495) 2

rgab.ru Берг АБ bergab@ya.ru Тел. (495)-228-06-21, факс (495) 2

rgab.ru Берг АБ bergab@ya.ru Тел. (495)-228-06-21, факс (495) 2

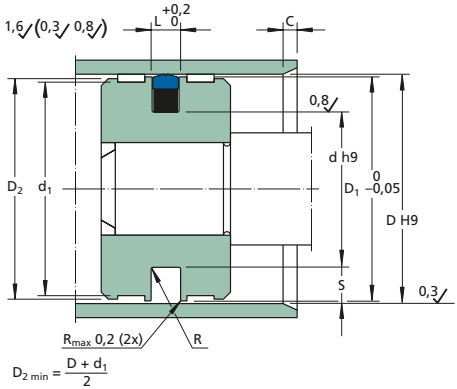

Type URG
Slide ring of polyurethane. Energizer of nitrile rubber.

Choose D_1 for the pressure range in question according to the tables.

The housing dimensions and tolerances stated are applicable at pressures of up to 40 MPa.

Applications with higher pressures usually need D_1 = D f7.

In applications with operating conditions demanding a diametrical clearance nominally smaller than 0,4 mm a separate bearing ring should be avoided.

Dimensions									Designation	ISO 7425-1
D	d	L	D_1 at pressure (MPa) 0 – 16	(16) – 25	(25) – 40	S	C	R		
mm									–	
40	29	4,2	39,3	39,5	39,6	5,5	7	0,5	**CR URG 40×29×4.2**	•
45	34	4,2	44,3	44,5	44,6	5,5	7	0,5	**CR URG 45×34×4.2**	
50	34,5	6,3	49,2	49,4	49,5	7,75	10	0,5	**CR URG 50×34.5×6.3**	•
50	39	4,2	49,3	49,5	49,6	5,5	7	0,5	**CR URG 50×39×4.2**	•
55	44	4,2	54,3	54,5	54,6	5,5	7	0,5	**CR URG 55×44×4.2**	
60	44,5	6,3	59,2	59,4	59,5	7,75	10	0,5	**CR URG 60×44.5×6.3**	
	49	4,2	59,3	59,5	59,6	5,5	7	0,5	**CR URG 60×49×4.2**	
63	47,5	6,3	62,2	62,4	62,5	7,75	10	0,5	**CR URG 63×47.5×6.3**	•
	52	4,2	62,3	62,5	62,6	5,5	7	0,5	**CR URG 63×52×4.2**	•
65	54	4,2	64,3	64,5	64,6	5,5	7	0,9	**CR URG 65×54×4.2**	
70	59	4,2	69,3	69,5	69,6	5,5	7	0,9	**CR URG 70×59×4.2**	
80	64,5	6,3	79,2	79,4	79,5	7,75	10	0,9	**CR URG 80×64.5×6.3**	•
	66,5	6,3	79,2	79,4	79,5	7,75	10	0,9	**CR URG 80×66.5×6.3**	
90	74,5	6,3	89,2	89,4	89,5	7,75	10	0,9	**CR URG 90×74.5×6.3**	
100	84,5	6,3	99,2	99,4	99,5	7,75	10	0,9	**CR URG 100×84.5×6.3**	•
110	94,5	6,3	109,2	109,4	109,5	7,75	10	0,9	**CR URG 110×94.5×6.3**	
120	104,5	6,3	119,2	119,4	119,5	7,75	10	0,9	**CR URG 120×104.5×6.3**	
125	109,5	6,3	124,2	124,4	124,5	7,75	10	0,9	**CR URG 125×109.5×6.3**	•
130	109	8,1	129	129,3	129,4	10,5	12	0,9	**CR URG 130×109×8.1**	
	114,5	6,3	129,2	129,4	129,5	7,75	10	0,9	**CR URG 130×114.5×6.3**	
140	119	8,1	139	139,3	139,4	10,5	12	0,9	**CR URG 140×119×8.1**	
150	129	8,1	149	149,3	149,4	10,5	12	0,9	**CR URG 150×129×8.1**	
160	139	8,1	159	159,3	159,4	10,5	12	0,9	**CR URG 160×139×8.1**	•
	144,5	6,3	159,2	159,4	159,5	7,75	10	0,9	**CR URG 160×144.5×6.3**	•

rgab.ru Берг АБ bergab@ya.ru Тел. (495)-228-06-21, факс (495) 2

rgab.ru Берг АБ bergab@ya.ru Тел. (495)-228-06-21, факс (495) 2

Dimensions									Designation	ISO 7425-1
D	d	L	D_1 at pressure (MPa) 0 – 16	(16) – 25	(25) – 40	S	C	R		
mm									–	
180	159	8,1	179	179,3	179,4	10,5	12	0,9	**CR URG 180×159×8.1**	
	164,5	6,3	179,2	179,4	179,5	7,75	10	0,9	**CR URG 180×164.5×6.3**	
200	179	8,1	199	199,3	199,4	10,5	12	0,9	**CR URG 200×179×8.1**	•
220	199	8,1	219	219,3	219,4	10,5	12	0,9	**CR URG 220×199×8.1**	
250	229	8,1	249	249,3	249,4	10,5	12	0,9	**CR URG 250×229×8.1**	•
280	259	8,1	279	279,3	279,4	10,5	12	0,9	**CR URG 280×259×8.1**	
320	299	8,1	319	319,3	319,4	10,5	12	0,9	**CR URG 320×299×8.1**	•

rgab.ru Берг АБ bergab@ya.ru Тел. (495)-228-06-21, факс (495) 2

rgab.ru Берг АБ bergab@ya.ru Тел. (495)-228-06-21, факс (495) 2

Double-acting compact piston seals, series M

Designations

SEALPOOL double-acting compact piston seals, series M, are designated according to a system which clearly states the dynamic sealing diameter (bore), housing groove diameter, housing groove width and material, see **Table 1**.

Design

The choice of seal design always includes a compromise between requirements and costs.

Type M is the regular design with good all-round properties. This type is manufactured in long series and can normally be delivered ex stock.

In applications where cylinders designed for double-acting functions are used for a single-acting function the double-acting piston seal should be of type MD. Type MD has three sealing edges which provides a thinner lubrication film. This results in a reduced amount of oil passing the seal. As a consequence of this, the operating service life of type MD might be slightly shorter than the operating service life of type M.

In addition to the MD sizes stated in the product tables, several of the M sizes can be delivered with an MD design.

Type M-R has been developed for applications with very high demands. The rectangular guide ring is manufactured with high precision in a moulded thermoplastic polyester (TP) material for temperatures up to +125 °C and with a tolerance range of 0,07 mm. For even more demanding applications, the guide ring can be delivered in a phenolic/-fabric material with a tolerance range of 0,05 mm.

Type M-R is also available in a number of sizes with three sealing edges – type MD-R.

See **fig 1** and **Table 2** for different designs and material combinations.

Table 1

Designation codes for series M piston seals

CR M 100×75×22.4 – R TP F

- Type
- Bore diameter
- Housing groove diameter
- Housing groove width
- Special design of support ring
- Special material of the guide ring
- Special material of the seal ring

Fig 1

Designs series M

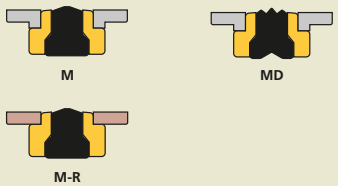

Table 2

Material combinations

Type	Sealing ring Nitrile rubber	Support ring Polyester elastomer	Guide ring Acetal resin	Phenolic/ fabric (PF)	Thermoplastic polyester (TP)
M	X	X	X		
MD	X	X	X		
M-R	X	X		X	X

Please contact us for discussions.

rgab.ru Берг АБ bergab@ya.ru Тел. (495)-228-06-21, факс (495) 2

rgab.ru Берг АБ bergab@ya.ru Тел. (495)-228-06-21, факс (495) 22

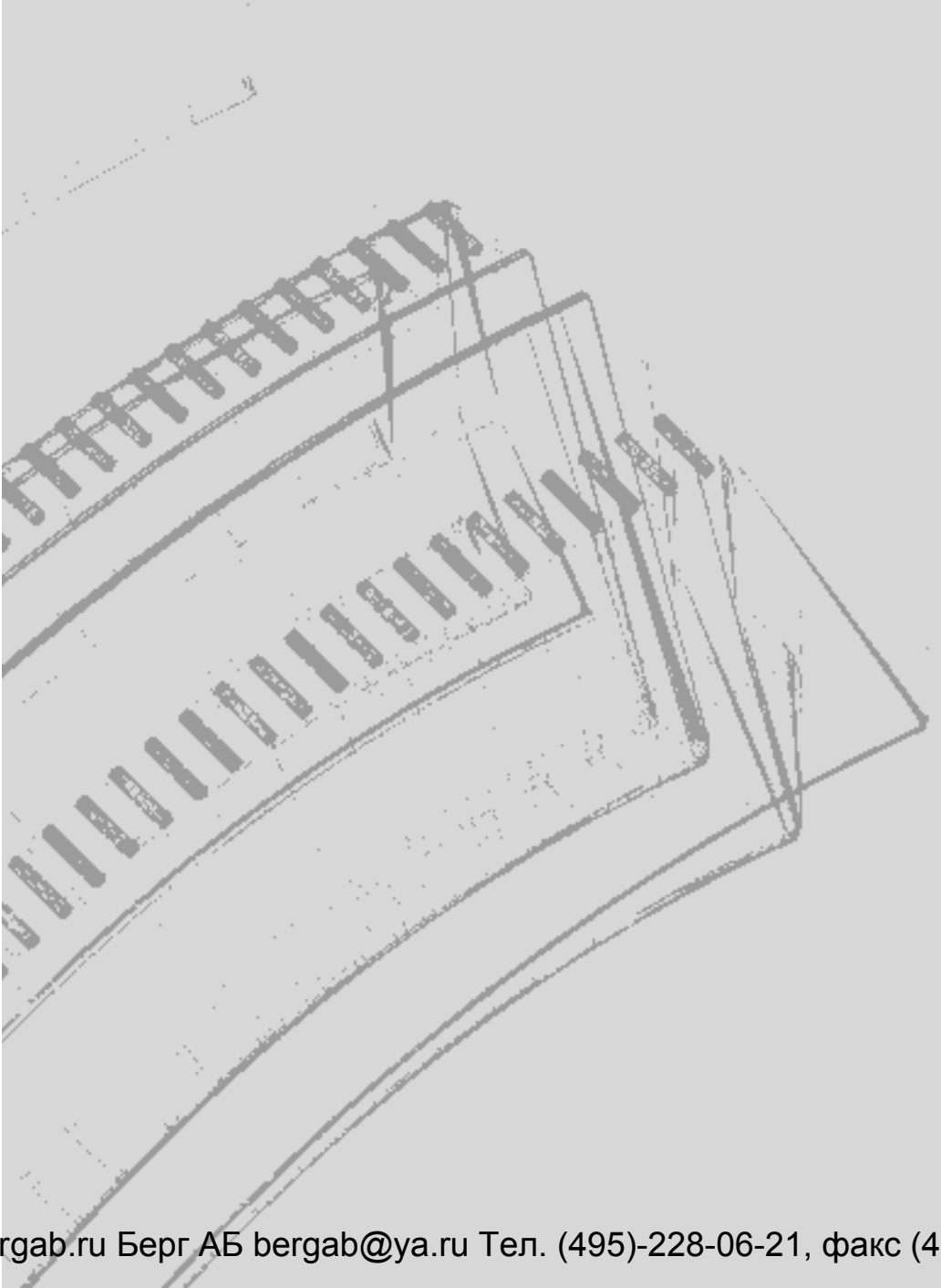

rgab.ru Берг АБ bergab@ya.ru Тел. (495)-228-06-21, факс (495) 22

rgab.ru Берг АБ bergab@ya.ru Тел. (495)-228-06-21, факс (495) 2

Double acting piston seal type M (MD)
D 25 – 95 mm

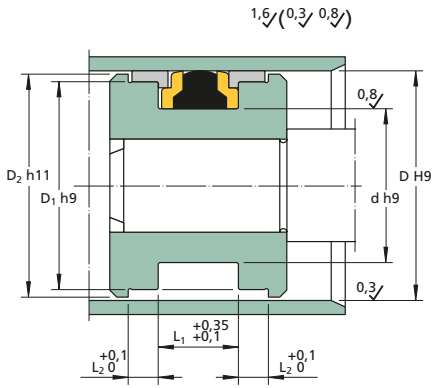

Type M (MD)
Sealing ring of nitrile rubber. Support rings of a polyester elastomer. Guide rings of acetal resin.

The housing dimensions and tolerances stated are applicable at working pressures of up to 40 MPa. Applications with higher pressure demand special dimensions.

Tolerance H11 on bore diameter D may be used except when using smaller radial section seals for diameters of 25 mm to 160 mm inclusive.

Dimensions						Designation	ISO 6547
D	d	L_1	L_2	D_1	D_2		
mm						–	
25	15	12,4	4	21	23	**CR M 25×15×12.4**	
	15	12,5	4	22	24	**CR MD 25×15×12.5**	•
	16	13,5	2,1	22	24	**CR MD 25×16×13.5**	
30	21	13,5	2,1	27	29	**CR MD 30×21×13.5**	
32	22	12,5	4	29	31	**CR M 32×22×12.5**	•
	22	15,5	2,6	28	31	**CR MD 32×22×15.5**	
	22	16,4	6,4	28,5	30,5	**CR MD 32×22×16.4**	
	24	10	4	29	31	**CR M 32×24×10**	•
	24	15,5	3,2	28	31,4	**CR MD 32×24×15.5**	
35	25	15,5	2,6	31	34	**CR MD 35×25×15.5**	
	25	16,4	6,4	31,4	33,5	**CR MD 35×25×16.4**	
	27	15,5	6,4	31,4	33,5	**CR MD 35×27×15.5**	
40	24	18,4	6,4	35,4	38,7	**CR M 40×24×18.4**	
	24	18,4	6,4	35,4	38,7	**CR MD 40×24×18.4**	
	26	15,5	2,6	36	39	**CR MD 40×26×15.5**	
	30	12,4	4	36	38	**CR MD 40×30×12.4**	
	30	12,5	4	37	39	**CR MD 40×30×12.5**	•
	30	16,4	6,4	35,4	38,7	**CR M 40×30×16.4**	
	32	15,5	3,2	36	39,4	**CR MD 40×32×15.5**	
45	29	18,4	6,4	40,4	43,7	**CR M 45×29×18.4**	
	35	16,4	6,4	40,4	43,5	**CR MD 45×35×16.4**	
	37	15,5	6,4	40,4	43,5	**CR MD 45×37×15.5**	
50	34	18,4	6,4	45,4	48,7	**CR M 50×34×18.4**	
	34	18,4	6,4	45,4	48,7	**CR M 50×34×18.4-RTP**	
	34	18,4	6,4	45,4	48,7	**CR MD 50×34×18.4**	
	34	20,5	3,1	46	49	**CR MD 50×34×20.5**	
	35	20	5	46	48,5	**CR M 50×35×20**	•
	38	20,5	4,2	46	49,4	**CR MD 50×38×20.5**	
	40	12,5	4	47	49	**CR M 50×40×12.5**	•
55	39	18,4	6,4	50,4	53,7	**CR M 55×39×18.4**	
	39	20,5	3,1	51	54	**CR MD 55×39×20.5**	
	45	12,5	4	52	54	**CR M 55×45×12.5**	
60	44	18,4	6,4	55,4	58,7	**CR M 60×44×18.4**	
	44	20,5	3,1	56	59	**CR MD 60×44×20.5**	
	48	20,5	4,2	56	59,4	**CR MD 60×48×20.5**	

rgab.ru Берг АБ bergab@ya.ru Тел. (495)-228-06-21, факс (495) 2

rgab.ru Берг АБ bergab@ya.ru Тел. (495)-228-06-21, факс (495) 22

Dimensions						Designation	ISO 6547
D	d	L_1	L_2	D_1	D_2		
mm						–	
63	47	18,4	6,4	58,4	61,5	**CR MD 63×47×18.4**	
	47	19,4	6,4	58,4	61,7	**CR M 63×47×19.4**	
	47	19,4	6,4	58,4	61,7	**CR M 63×47×19.4-RTP**	
	47	19,4	6,4	58,4	61,7	**CR MD 63×47×19.4**	
	47	20,5	3,1	59	62	**CR MD 63×47×20.5**	
	48	20	3,1	59	62	**CR MD 63×48×20**	•
	51	20,5	4,2	59	62,4	**CR MD 63×51×20.5**	
	53	12,5	4	60	62	**CR M 63×53×12.5**	•
65	49	20,5	3,1	61	64	**CR MD 65×49×20.5**	
	50	18,4	6,4	60,4	63,7	**CR M 65×50×18.4**	
	50	18,4	6,4	60,4	63,7	**CR MD 65×50×18.4**	
70	50	22,4	6,4	64,2	68,3	**CR M 70×50×22.4**	
	50	22,4	6,4	64,2	68,3	**CR M 70×50×22.4-RTP**	
	50	22,4	6,4	64,2	68,3	**CR MD 70×50×22.4**	
	54	20,5	3,1	66	69	**CR MD 70×54×20.5**	
	55	20	5	66	68,5	**CR M 70×55×20**	
	58	20,5	4,2	66	69,4	**CR MD 70×58×20.5**	
75	55	22,4	6,4	69,2	73,3	**CR M 75×55×22.4**	
	55	22,4	6,4	69,2	73,3	**CR MD 75×55×22.4**	
80	60	22,4	6,4	74,2	78,3	**CR M 80×60×22.4**	
	60	22,4	6,4	74,2	78,3	**CR M 80×60×22.4-RTP**	
	60	22,4	6,4	74,2	78,3	**CR MD 80×60×22.4**	
	60	25	6,3	75	78	**CR M 80×60×25**	•
	62	22,5	3,6	76	79	**CR MD 80×62×22.5**	
	65	20	5	76	78,5	**CR M 80×65×20**	•
	66	22,5	5,2	76	79,4	**CR MD 80×66×22.5**	
85	65	22,4	6,4	79,2	83,3	**CR M 85×65×22.4**	
90	70	22,4	6,4	84,2	88,3	**CR M 90×70×22.4**	
	70	22,4	6,4	84,2	88,3	**CR M 90×70×22.4-RTP**	
	70	22,4	6,4	84,2	88,3	**CR MD 90×70×22.4**	
	72	22,5	3,6	86	89	**CR MD 90×72×22.5**	
	75	20	5	86	88,5	**CR M 90×75×20**	
	76	22,5	5,2	86	89,4	**CR MD 90×76×22.5**	
95	75	22,4	6,4	89	93,3	**CR M 95×75×22.4**	

rgab.ru Берг АБ bergab@ya.ru Тел. (495)-228-06-21, факс (495) 22

rgab.ru Берг АБ bergab@ya.ru Тел. (495)-228-06-21, факс (495) 2

Double acting piston seal type M (MD)
D 100 – 210 mm

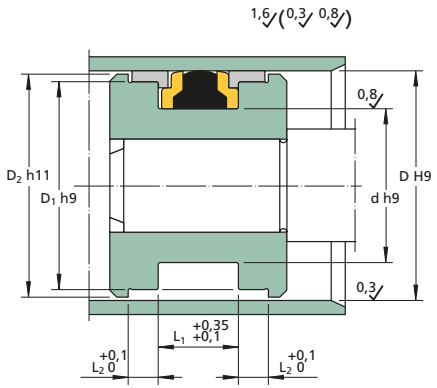

Type M (MD)
Sealing ring of nitrile rubber. Support rings of a polyester elastomer. Guide rings of acetal resin.
The housing dimensions and tolerances stated are applicable at working pressures of up to 40 MPa. Applications with higher pressure demand special dimensions.
Tolerance H11 on bore diameter D may be used except when using smaller radial section seals for diameters of 25 mm to 160 mm inclusive.

Dimensions						Designation	ISO 6547
D	d	L_1	L_2	D_1	D_2		
mm						–	
100	75	22,4	6,4	93,2	98	**CR M 100×75×22.4**	
	75	22,4	6,4	93,2	98	**CR M 100×75×22.4-RTP**	
	75	22,4	6,4	93,2	98	**CR MD 100×75×22.4**	
	80	25	6,3	95	98	**CR M 100×80×25**	•
	82	22,5	3,6	96	99	**CR MD 100×82×22.5**	
	85	20	5	96	98,5	**CR M 100×85×20**	•
	86	22,5	5,2	96	99,4	**CR MD 100×86×22.5**	
105	80	22,4	6,4	98,1	103	**CR M 105×80×22.4**	
110	85	22,4	6,4	103,1	108	**CR M 110×85×22.4**	
	85	22,4	6,4	103,1	108	**CR M 110×85×22.4-RTP**	
	85	22,4	6,4	103,1	108	**CR MD 110×85×22.4**	
	85	25,4	6,4	103,1	108	**CR M 110×85×25.4**	
	92	22,5	3,6	106	109	**CR MD 110×92×22.5**	
	95	20	5	106	108,5	**CR M 110×95×20**	
	96	22,5	5,2	106	109,4	**CR MD 110×96×22.5**	
115	90	22,4	6,4	108,1	113	**CR M 115×90×22.4**	
120	95	22,4	6,4	113,1	118	**CR M 120×95×22.4**	
	95	22,4	6,4	113,1	118	**CR M 120×95×22.4-RTP**	
	95	22,4	6,4	113,1	118	**CR MD 120×95×22.4**	
	106	22,5	5,2	116	119,4	**CR MD 120×106×22.5**	
125	100	25,4	6,4	118,1	123	**CR M 125×100×25.4**	
	100	25,4	6,4	118,1	123	**CR M 125×100×25.4-RTP**	
	100	25,4	6,4	118,1	123	**CR MD 125×100×25.4**	
	100	32	10	119	123	**CR M 125×100×32**	•
	105	25	6,3	120	123	**CR M 125×105×25**	•
	105	25,4	6,4	119,1	123,3	**CR M 125×105×25.4**	
	108	26,5	7,2	121	124,4	**CR MD 125×108×26.5**	
130	105	25,4	6,4	123,1	128	**CR M 130×105×25.4**	
	105	25,4	6,4	123,1	128	**CR MD 130×105×25.4**	
	110	25	6,4	125	128	**CR M 130×110×25**	
135	110	25,4	6,4	128,1	133	**CR MD 135×110×25.4**	
	110	25,4	9,5	127,5	132,5	**CR MD 135×110×25.4×9.5**	

rgab.ru Берг АБ bergab@ya.ru Тел. (495)-228-06-21, факс (495) 2

rgab.ru Берг АБ bergab@ya.ru Тел. (495)-228-06-21, факс (495) 2

Dimensions						Designation	ISO 6547
D	d	L_1	L_2	D_1	D_2		
mm						–	
140	115	25,4	6,4	133	138	**CR M 140×115×25.4**	
	115	25,4	6,4	133	138	**CR MD 140×115×25.4**	
	115	25,4	9,5	132,6	137,5	**CR MD 140×115×25.4×9.5**	
	120	25	6,3	135	138	**CR M 140×120×25**	
	123	26,5	7,2	136	139,4	**CR MD 140×123×26.5**	
145	120	25,4	6,4	138,3	143	**CR MD 145×120×25.4**	
	120	25,4	9,5	137,6	142,5	**CR MD 145×120×25.4×9.5**	
150	125	25,4	6,4	143	148	**CR M 150×125×25.4**	
	128	26,5	5,1	146	149	**CR MD 150×128×26.5**	
	133	26,5	7,2	146	149,4	**CR MD 150×133×26.5**	
155	130	25,4	9,5	147,6	152,5	**CR MD 155×130×25.4×9.5**	
160	130	25,4	6,4	153	157,9	**CR M 160×130×25.4**	
	130	25,4	6,4	153	157,9	**CR MD 160×130×25.4**	
	135	25,4	9,5	152,6	157,5	**CR MD 160×135×25.4×9.5**	
	135	32	10	154	158	**CR MD 160×135×32**	•
	140	25	6,3	155	158	**CR M 160×140×25**	•
	143	26,5	7,2	156	159,4	**CR MD 160×143×26.5**	
165	140	25,4	9,5	157,6	162,5	**CR MD 165×140×25.4×9.5**	
170	140	25,4	6,4	163	168	**CR M 170×140×25.4**	
	145	25,4	12,7	161,7	167,1	**CR MD 170×145×25.4×12.7**	
180	150	35,4	6,4	173	178	**CR M 180×150×35.4**	
	150	36	12,5	172	178	**CR M 180×150×36**	
	155	25,4	12,7	171,7	177,7	**CR MD 180×155×25.4×12.7**	
	163	26,5	7,2	176	179,4	**CR MD 180×163×26.5**	
190	165	25,4	12,7	181,7	187	**CR MD 190×165×25.4×12.7**	
200	170	35,4	6,4	193	198	**CR M 200×170×35.4**	
	170	36	12,5	192	197	**CR M 200×170×36**	•
	175	25,4	12,7	191,6	197	**CR MD 200×175×25.4×12.7**	
	180	31,5	9,2	196	199,4	**CR MD 200×180×31.5**	
210	185	25,4	12,7	201,6	207	**CR MD 210×185×25.4×12.7**	

rgab.ru Берг АБ bergab@ya.ru Тел. (495)-228-06-21, факс (495) 2

rgab.ru Берг АБ bergab@ya.ru Тел. (495)-228-06-21, факс (495) 2

Double acting piston seal (type M (MD))
D 220 – 320 mm

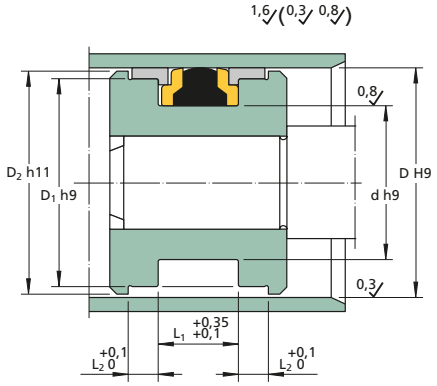

Type M (MD)
Sealing ring of nitrile rubber. Support rings of a polyester elastomer. Guide rings of acetal resin.

The housing dimensions and tolerances stated are applicable at working pressures of up to 40 MPa. Applications with higher pressure demand special dimensions.

Tolerance H11 on bore diameter D may be used except when using smaller radial section seals for diameters of 25 mm to 160 mm inclusive.

Dimensions						Designation	ISO 6547
D	d	L_1	L_2	D_1	D_2		
mm						–	
220	190	35,4	6,4	213	218	**CR M 220×190×35.4**	
	195	25,4	12,7	211,6	217	**CR MD 220×195×25.4×12.7**	
230	205	25,4	12,7	221,6	227	**CR MD 230×205×25.4×12.7**	
240	215	25,4	12,7	231,6	237	**CR MD 240×215×25.4×12.7**	•
250	220	35,4	6,4	243	248	**CR M 250×220×35.4**	
	220	36	12,5	242	247	**CR M 250×220×36**	•
	225	25,4	12,7	241,6	247	**CR MD 250×225×25.4×12.7**	
	230	31,5	9,2	246	249,4	**CR MD 250×230×31.5**	
280	250	36,4	10	273	278	**CR M 280×250×36.4**	
320	290	36	12,5	312	317	**CR M 320×290×36**	•

rgab.ru Берг АБ bergab@ya.ru Тел. (495)-228-06-21, факс (495) 2

rgab.ru Берг АБ bergab@ya.ru Тел. (495)-228-06-21, факс (495) 2

rgab.ru Берг АБ bergab@ya.ru Тел. (495)-228-06-21, факс (495) 2

rgab.ru Берг АБ bergab@ya.ru Тел. (495)-228-06-21, факс (495) 2

Double acting piston seal type A
D **80 – 300** mm

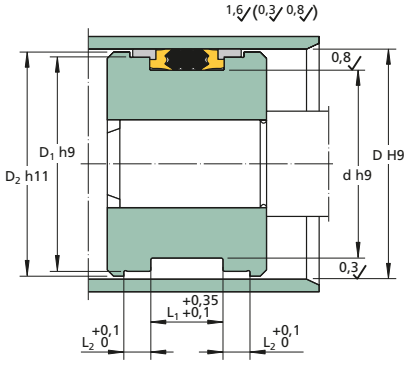

Type A
Sealing ring of nitrile rubber. Support rings of a polyester elastomer. Guide rings of acetal resin.
Tolerance H11 on bore diameter D may be used except when using smaller radial section seals for diameters of 25 mm to 160 mm inclusive.

Dimensions						Designation
D	d	L_1	L_2	D_1	D_2	
mm						–
80	60	35	9,5	72,6	77,5	**CR A 80×60×35**
90	70	35	9,5	82,5	87,5	**CR A 90×70×35**
100	80	35	9,5	92,6	97,5	**CR A 100×80×35**
110	85	45	12,7	101,7	107,3	**CR A 110×85×45**
120	100	35	9,5	112,8	117,6	**CR A 120×100×35**
125	100	45	12,7	116,8	122,3	**CR A 125×100×45**
140	115	45	12,7	131,7	137,3	**CR A 140×115×45**
150	125	45	12,7	141,7	147,3	**CR A 150×125×45**
160	135	45	12,7	151,7	157,1	**CR A 160×135×45**
180	155	45	12,7	171,6	177,3	**CR A 180×155×45**
200	175	45	12,7	191,6	197,3	**CR A 200×175×45**
220	195	45	12,7	211,6	217,3	**CR A 220×195×45**
250	225	45	12,7	241,7	247,1	**CR A 250×225×45**
300	275	45	12,7	291,6	297,3	**CR A 300×275×45**

rgab.ru Берг АБ bergab@ya.ru Тел. (495)-228-06-21, факс (495) 2

rgab.ru Берг АБ bergab@ya.ru Тел. (495)-228-06-21, факс (495) 2

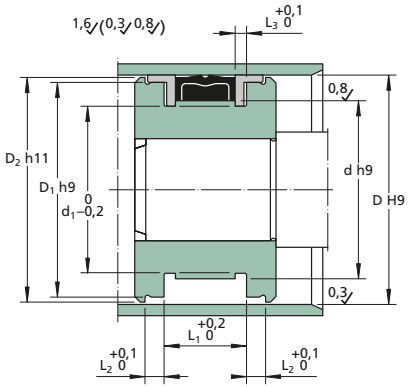

Type SM
Sealing ring with fabric reinforced rubber sealing surface. Guide rings of acetal resin.

2

Dimensions								Designation
D	d	L_1	L_2	D_1	D_2	d_1	L_3	
mm						–		
35	27	15,5	3,2	31	34,4	24	3,1	**CR SM 35×27×15.5**
40	32	15,5	3,2	36	39,4	29	3,1	**CR SM 40×32×15.5**
45	37	15,5	3,2	41	44,4	34	3,1	**CR SM 45×37×15.5**
60	48	20,5	4,2	56	59,4	-	-	**CR SM 60×48×20.5**
63	51	20,5	4,2	59	62,4	-	-	**CR SM 63×51×20.5**
70	58	20,5	4,2	66	69,4	-	-	**CR SM 70×58×20.5**
90	76	22,5	5,2	86	89,4	-	-	**CR SM 90×76×22.5**
100	86	22,5	5,2	96	99,4	-	-	**CR SM 100×86×22.5**
110	96	22,5	5,2	106	109,4	-	-	**CR SM 110×96×22.5**
125	108	26,5	7,2	121	124,4	-	-	**CR SM 125×108×26.5**
140	123	26,5	7,2	136	139,4	-	-	**CR SM 140×123×26.5**
160	143	26,5	7,2	156	159,4	-	-	**CR SM 160×143×26.5**

rgab.ru Берг АБ bergab@ya.ru Тел. (495)-228-06-21, факс (495) 2

rgab.ru Берг АБ bergab@ya.ru Тел. (495)-228-06-21, факс (495) 2

Double acting piston seal type MSS
D 25 – 125 mm

Type MSS
Sealing ring of nitrile rubber. Guide/support rings of acetal resin.

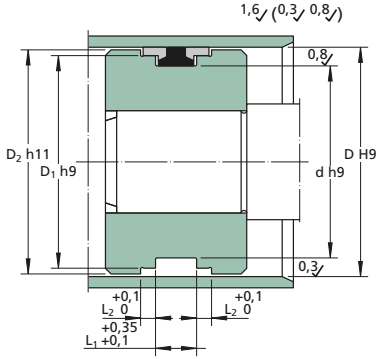

Dimensions						Designation
D	d	L_1	L_2	D_1	D_2	
mm					–	
25	17,5	8,5	3,25	21,3	24	**CR MSS 25×17.5×8.5**
40	30	11	4	35,5	39	**CR MSS 40×30×11**
50	40	11	4	45,5	49	**CR MSS 50×40×11**
63	53	11	4	58,5	61,5	**CR MSS 63×53×11**
80	70	11	4	75,5	78,5	**CR MSS 80×70×11**
100	87	14	6	93,8	98,5	**CR MSS 100×87×14**
125	112	14	6	118,8	123,5	**CR MSS 125×112×14**

rgab.ru Берг АБ bergab@ya.ru Тел. (495)-228-06-21, факс (495) 2

rgab.ru Берг АБ bergab@ya.ru Тел. (495)-228-06-21, факс (495) 22

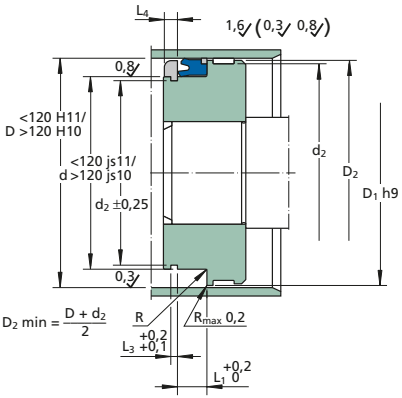

Type SAARR
Piston seal of polyurethane with back-up ring of acetal resin. Retainer ring of acetal resin.

The housing dimensions and tolerances stated are applicable at working pressures of up to 40 MPa.

Applications with higher working pressures demand special housing dimensions.

2

Dimensions							Designation
D	d	L_1	D_1	D_2	L_2	L_3	
mm							–
90	70	16	89	65,6	3,3	6,5	**CR SAARR 90×70×16**
95	75	16	94	70,6	3,3	6,5	**CR SAARR 95×75×16**
100	80	16	99	75,6	3,3	6,5	**CR SAARR 100×80×16**
110	90	16	109	80,6	3,3	6,5	**CR SAARR 110×90×16**

rgab.ru Берг АБ bergab@ya.ru Тел. (495)-228-06-21, факс (495) 22

rgab.ru Берг АБ bergab@ya.ru Тел. (495)-228-06-21, факс (495) 2

Single acting piston seal type SA
D 30 – 450 mm

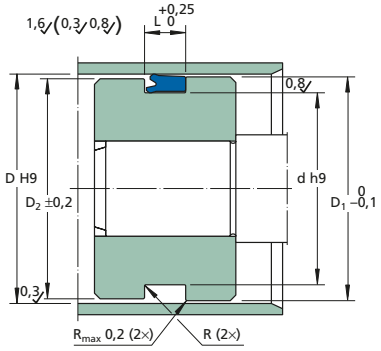

$D_1 = D_{nom} - 0,2$
$D_2 = D_{nom} - 0,2$

Type SA
Piston seal of polyurethane.

Dimensions D	d	L	Designation
mm			–
30	20	9	**CR SA 30×20×9**
	22	7	**CR SA 30×22×7**
32	22	9	**CR SA 32×22×9**
	22	11	**CR SA 32×22×11**
35	20	11	**CR SA 35×20×11**
	27	11	**CR SA 35×27×11**
37	21	13	**CR SA 37×21×13**
40	25	11	**CR SA 40×25×11**
	30	11	**CR SA 40×30×11**
	32	9	**CR SA 40×32×9**
	33	9	**CR SA 40×33×9**
45	30	11	**CR SA 45×30×11**
50	40	11	**CR SA 50×40×11**
	42	9	**CR SA 50×42×9**
	42	11	**CR SA 50×42×11**
50,8	41,8	4,66	**CR SA 50.8×41.8×4.66**
55	40	11	**CR SA 55×40×11**
60	40	13	**CR SA 60×40×13**
	45	11	**CR SA 60×45×11**
	50	11	**CR SA 60×50×11**
63	43	13	**CR SA 63×43×13**
	48	13	**CR SA 63×48×13**
	53	8	**CR SA 63×53×8**
	53	13	**CR SA 63×53×13**
65	50	11	**CR SA 65×50×11**
	55	11	**CR SA 65×55×11**
70	50	14,5	**CR SA 70×50×14.5**
	60	13	**CR SA 70×60×13**
75	65	14,5	**CR SA 75×65×14.5**

Dimensions D	d	L	Designation
mm			–
80	60	13	**CR SA 80×60×13**
	60	14,5	**CR SA 80×60×14.5**
	70	8	**CR SA 80×70×8**
	70	13	**CR SA 80×70×13**
	72	13	**CR SA 80×72×13**
85	75	11	**CR SA 85×75×11**
90	70	13	**CR SA 90×70×13**
	75	13	**CR SA 90×75×13**
	80	5,5	**CR SA 90×80×5.5**
	80	14	**CR SA 90×80×14**
100	80	11	**CR SA 100×80×11**
	85	13	**CR SA 100×85×13**
	90	11,5	**CR SA 100×90×11.5**
101,6	80	13	**CR SA 101.6×80×13**
110	95	13	**CR SA 110×95×13**
115	105	14,5	**CR SA 115×105×14.5**
120	100	13	**CR SA 120×100×13**
125	105	13	**CR SA 125×105×13**
	105	16	**CR SA 125×105×16**
	115	16	**CR SA 125×115×16**
130	110	13	**CR SA 130×110×13**
	120	14,5	**CR SA 130×120×14.5**
140	120	13	**CR SA 140×120×13**
	120	16	**CR SA 140×120×16**
150	130	16	**CR SA 150×130×16**
160	140	14,5	**CR SA 160×140×14.5**
	140	16	**CR SA 160×140×16**
180	160	16	**CR SA 180×160×16**

rgab.ru Берг АБ bergab@ya.ru Тел. (495)-228-06-21, факс (495) 2

rgab.ru Берг АБ bergab@ya.ru Тел. (495)-228-06-21, факс (495) 2

Dimensions			Designation
D	d	L	
mm			–
200	180	16	**CR SA 200×180×16**
220	200	16	**CR SA 220×200×16**
250	230	16	**CR SA 250×230×16**
280	250	19	**CR SA 280×250×19**
360	330	21	**CR SA 360×330×21**
400	375	25	**CR SA 400×375×25**
450	440	7,5	**CR SA 450×440×7.5**

rgab.ru Берг АБ bergab@ya.ru Тел. (495)-228-06-21, факс (495) 2

rgab.ru Берг АБ bergab@ya.ru Тел. (495)-228-06-21, факс (495) 22

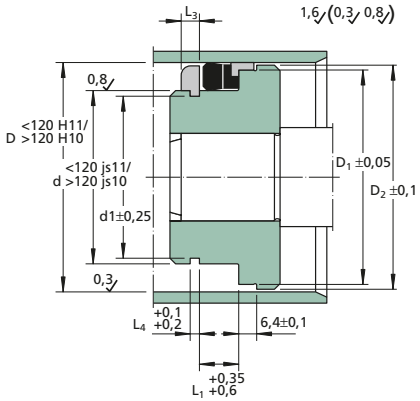

Type SWRR
Sealing ring of nitrile rubber with fibre reinforcement. Guide ring of acetal resin. Retainer ring of acetal resin.

Dimensions								Designation
D	d	L_1	D_1	D_2	d_1	L_3	L_4	
mm								–
32	20	10	28,5	30,9	15,6	6	3,1	**CR SWRR 32×20×10**
40	26	9,5	35,4	38,7	21,6	6	3,1	**CR SWRR 40×26×9.5**
45	35	9	42	44,1	30,6	5	2,6	**CR SWRR 45×35×9**
55	40	11	50,4	53,7	35,6	6	3,1	**CR SWRR 55×40×11**
60	40	14,5	54,2	58,3	35,6	6,5	3,3	**CR SWRR 60×40×14.5**
63	45	11	58,4	61,6	40,6	6	3,1	**CR SWRR 63×45×11**
65	45	14,5	59,2	63,3	40,6	6,5	3,3	**CR SWRR 65×45×14.5**
	50	11	60,4	63,6	45,6	6	3,1	**CR SWRR 65×50×11**
70	50	14,5	64,2	68,3	45,6	6,5	3,3	**CR SWRR 70×50×14.5**
75	55	14,5	69,2	73,3	50,6	6,5	3,3	**CR SWRR 75×55×14.5**
80	60	14,5	74,2	78,3	55,6	6,5	3,3	**CR SWRR 80×60×14.5**
85	70	12,5	80,3	83,6	–	–	–	**CR SW 85×70×12.5**
90	70	14,5	84,2	88,3	65,6	6,5	3,3	**CR SWRR 90×70×14.5**
95	75	14,5	89,2	93,3	70,6	6,5	3,3	**CR SWRR 95×75×14.5**
100	80	14,5	94,2	98,3	75,6	6,5	3,3	**CR SWRR 100×80×14.5**
104,5	85	13	98,7	102,8	80,6	6,8	4,8	**CR SWRR 104.5×85×13**
105	85	13	98,7	103,3	80,6	6,8	4,8	**CR SWRR 105×85×13**
110	90	13	104,1	108,3	85,6	6,5	3,3	**CR SWRR 110×90×13**
115	95	14,5	109,1	113,3	90,6	6,5	3,3	**CR SWRR 115×95×14.5**
120	100	13	114,1	118,3	95,6	6,5	3,3	**CR SWRR 120×100×13×2.9**
	100	13	113,1	118,3	95,6	6,5	3,3	**CR SWRR 120×100×13×3.4**
125	105	12,5	119,1	123,3	100,6	6,5	3,3	**CR SWRR 125×105×12.5**

rgab.ru Берг АБ bergab@ya.ru Тел. (495)-228-06-21, факс (495) 22

rgab.ru Берг АБ bergab@ya.ru Тел. (495)-228-06-21, факс (495) 2

Dimensions								Designation
D	d	L_1	D_1	D_2	d_1	L_3	L_4	
mm								–
130	110	13	122,6	127,5	105,6	6,5	3,3	**CR SWRR 130×110×13**
140	120	12,5	134,1	138,3	–	–	–	**CR SW 140×120×12.5**
150	125	14,5	143	148	–	–	–	**CR SW 150×125×14.5**
190	160	20,5	183	188	–	–	–	**CR SW 190×160×20.5**
200	180	14,5	194,2	198,3	–	–	–	**CR SW 200×180×14.5**
210	180	20,5	202,9	208	–	–	–	**CR SW 210×180×20.5**
230	200	20,5	223,1	228	–	–	–	**CR SW 230×200×20.5**
250	220	20,5	242,7	248	–	–	–	**CR SW 250×220×20.5**
	230	14,5	242,7	248	–	–	–	**CR SW 250×230×14.5**
280	250	20,5	272,9	278	–	–	–	**CR SW 280×250×20.5**
300	270	20,5	292,9	298	–	–	–	**CR SW 300×270×20.5**
330	300	20,5	322,9	328	–	–	–	**CR SW 330×300×20.5**
350	310	20,5	342,9	348	–	–	–	**CR SW 350×310×20.5**
360	330	20,5	352,9	358	–	–	–	**CR SW 360×330×20.5**
400	370	20,5	392,9	398	–	–	–	**CR SW 400×370×20.5**

rgab.ru Берг АБ bergab@ya.ru Тел. (495)-228-06-21, факс (495) 2

rgab.ru Берг АБ bergab@ya.ru Тел. (495)-228-06-21, факс (495) 2

Type SAW
Piston seal of polyurethane with guide ring of acetal resin.

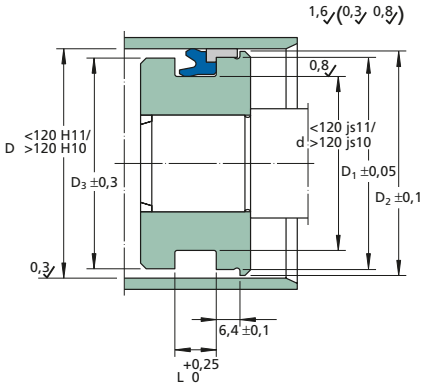

Dimensions						Designation
D	d	L	D_1	D_2	D_3	
mm						–
40	25	9,5	35,4	38,7	30	**CR SAW 40×25×9.5**
45	35	9,5	40,4	44,1	40	**CR SAW 45×35×9.5**
50	35	11	45,3	48,7	42	**CR SAW 50×35×11**
55	40	11	50,3	53,7	47	**CR SAW 55×40×11**
60	45	11	55,4	58,3	53	**CR SAW 60×45×11**
65	50	11	60,4	63,3	57	**CR SAW 65×50×11**
70	50	14,5	64,2	68,3	60	**CR SAW 70×50×14.5**
80	60	14,5	74,1	78,3	70	**CR SAW 80×60×14.5**
90	70	14,5	84,1	88,3	80	**CR SAW 90×70×14.5**
100	80	14,5	94,1	98,3	90	**CR SAW 100×80×14.5**

rgab.ru Берг АБ bergab@ya.ru Тел. (495)-228-06-21, факс (495) 2

rgab.ru Берг АБ bergab@ya.ru Тел. (495)-228-06-21, факс (495) 22

rgab.ru Берг АБ bergab@ya.ru Тел. (495)-228-06-21, факс (495) 22

rgab.ru Берг АБ bergab@ya.ru Тел. (495)-228-06-21, факс (495) 2

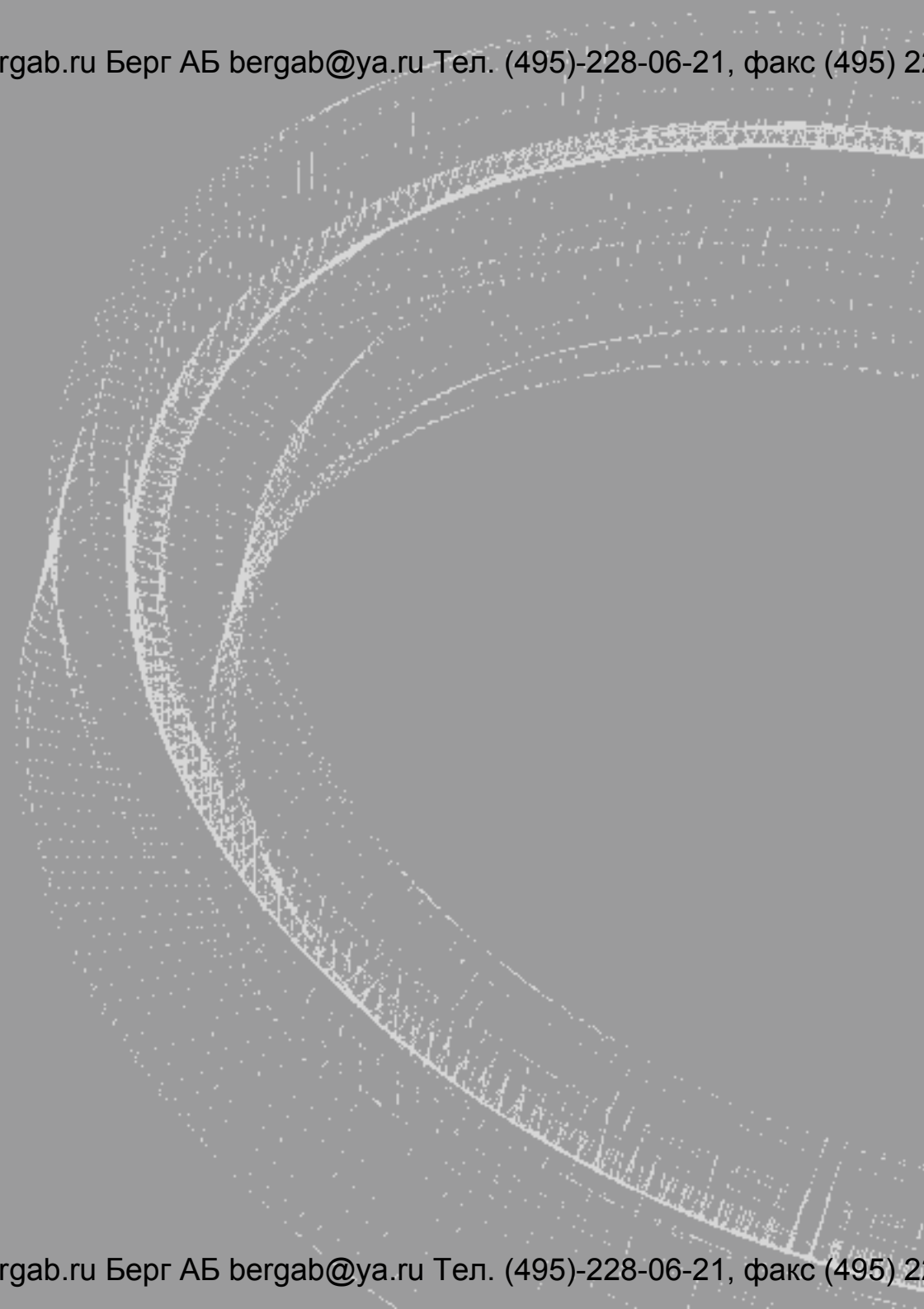

rgab.ru Берг АБ bergab@ya.ru Тел. (495)-228-06-21, факс (495) 2

rgab.ru Берг АБ bergab@ya.ru Тел. (495)-228-06-21, факс (495) 2

Rod seals

Rod seals **92**
Sealing ability 92
Dynamic sealing ability 92
Static sealing ability 92
Sealing between cylinder tube and cylinder head 92
Functions 93
U-ring seals of polyurethane materials 93
Compact seals of nitrile rubber 94
Slide ring seals of PTFE 95
Tandem sealing systems 96
Telescopic cylinders 97
Small spaces 98
Vibrations 98
Pressure 98
Back-up rings 99
Rod surfaces 100
Surface properties 100
Friction 102
Seal materials 102
Operating temperature 103
Installation and assembly 104
Seal design and installation 106

Product tables
SIL, TIL 108
Rod seals series G 110
SG 126
AG 129
SKY 130
UN 132
SI 136
TI, TILA 140
S 142
Rod seals series GL 144
CH 152
STR , back-up ring for rod seals 156
RI, retainer ring for rod seals 158

rgab.ru Берг АБ bergab@ya.ru Тел. (495)-228-06-21, факс (495) 2

rgab.ru Берг АБ bergab@ya.ru Тел. (495)-228-06-21, факс (495) 2

Rod seals

The rod seal is the seal in the hydraulic cylinder with the most demanding requirement specifications. In addition to normal wear and aging, this seal is directly affected by changes on the rod surface.

The rod seal is often the decisive factor for the function of the hydraulic cylinder in its entirety. Leakage through the rod seal can in some cases cause accidents and environmental damages. Therefore, it is of significant importance to make the correct choice of rod seal and not the least, to be familiar with the properties of other existing seal types.

Sealing ability

The concepts oil transport and leakage are often used, but the meanings of the concepts differ since they express personal judgements emanating from the different demands on the cylinder.

A certain oil transport is needed to provide the necessary lubrication of the rod seal, guide and wiper. The lubrication film must, however, be thin enough not to leave the rod but to return into the cylinder at the return stroke.

The lubrication film's limited amount of oil transported during the reciprocating movement, passing wiper seal, guide and rod seal and leaving a slight oil ring and without dripping, is normally defined as oil transport.

The amount of lubrication film wiped off by the wiper seal (together with the contamination particles that may be present) must not cause substantial oil rings or drops. Repeated dripping is normally defined as leakage.

The amount of oil transport or leakage is directly proportional to the area of the surface wiped off.

Dynamic sealing ability

The dynamic sealing ability depends on factors such as the material combination of the seal, the design of the seal lip, the sealing edge and the central sealing ring as well as the properties of the rod surface. Other important decisive factors are stroke speed and frequency, pressure fluid properties and temperature conditions.

The construction and fitting clearance of the guide are also of significant importance. For further details, please read chapter "Guide rings and guide strips" starting at **page 211**.

Static sealing ability

A leakage from the cylinder via the rod is not always caused by a defective dynamic sealing function. A failing static function of the rod seal may also cause leakage via the seal housing groove.

The decisive factors are the surface roughness value of the seal housing groove in relation to the hardness of the seal material, the design of the sealing edge and to a certain degree the possibility for the seal to move axially in the seal housing groove.

It can be difficult to achieve a satisfactory surface roughness value at the base of closed grooves. A change to an open groove, designed for assembly with our retainer ring type RI, facilitates the machining methods in order to achieve a satisfactory surface roughness value. An open groove also simplifies the cleaning of the groove, the control of the surface roughness value and the assembly, see **fig 1**.

Sealing between cylinder tube and cylinder head

An other reason for leakage that seemingly takes place via the rod seal, may instead be a failing sealing function between the cylinder tube and the cylinder head. This can be caused by an unsufficient deformation of the O-ring or too small a section of the O-ring. The use of O-ring materials of low quality with low compression set value can result in a substantial permanent deformation, resulting in leakage.

rgab.ru Берг АБ bergab@ya.ru Тел. (495)-228-06-21, факс (495) 2

rgab.ru Берг АБ bergab@ya.ru Тел. (495)-228-06-21, факс (495) 2

A bad surface roughness value of the the seal housing groove or too large a fitting clearance between the cylinder tube and the cylinder head are other possible reasons for leakage.

Back-up rings should always be used together with an O-ring for static sealing between the cylinder tube and the cylinder head.

Functions

The rod seal's task is very difficult since it must seal at both high and low pressure, often in combination with alternating high and low temperature. The rod seal must leave a certain lubrication film, thin enough to return into the cylinder after having passed an effective wiper seal.

Rod seals are produced in several different designs in order to function at very varying operating conditions. Unfortunately, there is no completely perfect rod seal satisfying all, often conflicting, demands.

When choosing a rod seal, it is important to define the area of application and to make selection analyses with the support of carefully drawn-up requirement specifications. The aim of this catalogue is to throw some light on the most important factors that affect the choice and thereby the possibility of reaching a solution which will provide the desired results.

U-ring seals of polyurethane materials

Polyurethane materials are based on either ether (poly*ether*urethane) or ester (poly*ester*urethane) and are very wear resistant, although many varieties exist. It is therefore very important to make sure to choose a seal made of a material with appropriate properties for the demands of the application in question and a material which does not vary from one manufacturing batch to another. Polyetherurethane has better low temperature properties than polyesterurethane and is more resistant to environmentally adapted hydraulic oils. Other thermal and physical properties of polyetherurethane are now also equivalent to those of polyesterurethane. Most rod seals manufactured of polyurethane, normally with a hardness value of 92 to 95° IRH, are designed as U-ring seals in order to provide optimal sealing properties.

High contact force is concentrated to the sealing edge, which can be made very sharp if manufactured of polyurethane. This results in a high specific surface pressure on a small contact surface, which provides optimal sealing ability at low-pressure conditions through effectively wiping off the lubrication film from the rod surface, see **fig 2**.

Fig 1

System solution with retainer ring

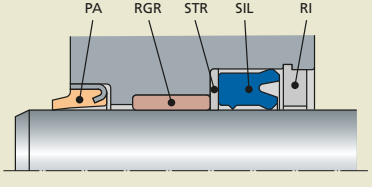

Fig 2

U-ring seal of polyurethane with a secondary sealing lip, type SIL

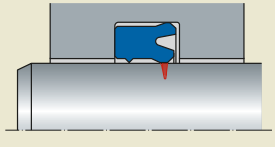

rgab.ru Берг АБ bergab@ya.ru Тел. (495)-228-06-21, факс (495) 2

rgab.ru Берг АБ bergab@ya.ru Тел. (495)-228-06-21, факс (495) 2

The axial width of the seal section is somewhat increased at the assembly since its radial section dimension decreases. In order to enable assembly into closed housing grooves, the axial width of the seal housing groove therefore always must be 0,5 to 1 mm larger than the axial width of the seal section (depending on seal dimension). Furthermore, a certain free space is needed to let the pressure media work all over the seal section, also after expansion of the seal material due to increased temperature. This results in the fact that the seal can move axially just as much as allowed by the space of the housing groove at varying operating conditions.

In order to achieve a good static sealing function with rod seals of polyurethane a careful treatment of the seal housing groove surface is needed. In our installation instructions, we normally suggest generally established surface roughness values. These are, however, not good enough in most demanding applications. We then suggest a surface roughness value of 0,8 µm R_a.

Type SIL of polyurethane is our all-round rod seal, see **fig 2**. This seal is designed with an asymmetrical cross section with a short and strong dynamic seal lip in order to provide good sealing performance also at zero-pressure conditions. The outer seal lip is slightly longer and slimmer than the inner one in order to effectively seal statically at radial and axial movements at both low and high temperatures.

Type TIL of polyurethane is designed with short and strong seal lips providing a good contact force towards the surface of the seal housing groove. Type TIL is more compact than type SIL and is especially suitable for small radial seal section dimensions, i.e. 4 to 6 mm, where this type retains a good sealing performance at low- or zero-pressure conditions.

SIL and TIL are designed with a secondary sealing edge, the main task of which is to reduce the contact surface towards the rod at both low temperatures (when the seal diameter is decreasing) and high temperatures (when the seal material is getting softer). Additionally, their ability to retain the contact force and sealing ability against the seal housing groove surface is improved.

We nowadays suggest both type SIL and type TIL to be produced of polyetherurethane.

Fig 3

Compact seal of nitrile rubber with back-up ring, type SG

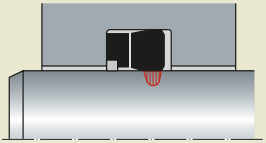

Compact seals of nitrile rubber

Nitrile rubber materials are available with good compression set values at high temperatures and good elasticity in cold operating conditions. Unfortunately, they cannot be produced with a hardness value over 80° IRH with retained good properties in cold conditions. This is, however, compensated by the well-developed design of compact seals.

The relatively low hardness value enables the compact seal to easily retain a good sealing ability against the housing groove at low pressures. Its ability to wipe off the lubrication film is, however, inferior since the soft material cannot provide enough sealing force per area unit, see **fig 3**. The sealing edge is “surfing” on a relatively thick lubrication film, which, combined with an effective wiper seal, can result in a substantial leakage. With an increased radial squeeze, the sealing ability of the compact seal is improved, but on the other hand, the friction, heat generation and wear will increase.

For many years, compact rod seals have been manufactured according to a 3-step principle with a gradually increasing hardness of the seal materials, starting from the pressure side. The primary sealing front part of the nitrile rubber seal is vulcanized to a reinforcing part of a phenolic/fabric material or a fibre material distributing the pressure load in front of the extrusion preventing back-up ring of acetal resin.

Also in compact seals the back-up ring contributes to an increase of the service life of the seal by reducing the friction loss and the heat generation.

Type SG is designed with a back-up ring and normally functions well in the temperature range of –30 to +110 °C.

We suggest type SG in new constructions of cylinders for all-round use and in applications with operating conditions for which the properties of nitrile rubber are more appropriate than those of polyurethane, e.g. applications with hydraulic media based on water added with oil or

rgab.ru Берг АБ bergab@ya.ru Тел. (495)-228-06-21, факс (495) 2

rgab.ru Берг АБ bergab@ya.ru Тел. (495)-228-06-21, факс (495) 2

glycol. In such media nitrile rubber seals can be used in the temperature range of –30 to +70 °C.

Slide ring seals of PTFE

PTFE has properties which surpass all other known seal materials when it comes to low friction and chemical and thermal resistance. Compared with polyurethane and nitrile rubber materials used in sealing elements, PTFE is hard and non-elastic. In order to take advantage of the excellent properties of PTFE, sealing units made of PTFE must be combined with an energizing element of rubber, see **fig 4a**, or metal. The housing dimensions of type GS are in accordance with ISO 7425-2, which the chamfer on the seals' outside diameter indicates, see **fig 4b**.

In addition to this, the slide ring seal must have a well-planned design and the energizing element must provide the necessary initial sealing force and guarantee the static sealing function in the seal housing groove.

To obtain optimum service life, PTFE materials are used with different types of fillers which improve the resistance to deformation and wear, and reduce the risk of extrusion into the clearance between the piston and the cylinder tube. Our PTFE material for the widest range of applications contains bronze and molybdenum disulphide and has the designation MS-292.

An O-ring is most frequently used as the energizing element for the slide ring. This is mainly due to the fact that it is easy to obtain O-rings in the desired size and material. It is important to choose an energizing element consisting of material with the best possible properties, since the function of the slide ring is totally dependant on the properties of the rubber material. An O-ring with bad compression set values reduces the service life of the entire seal.

It is a great advantage from a functional point of view if the slide ring along its entire width can be pressed evenly against the rod surface. We therefore suggest whenever possible that the slide ring be combined with a square ring as an energizing element instead of an O-ring. It is also important that the surface of the seal housing groove is uniformly even, otherwise there is a risk of static leakage.

3

Fig 4

Slide ring seal of PTFE, type GS

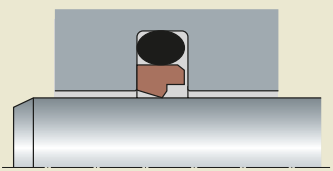

a

The chamfer on the outside diameter indicates that the seal is adjusted to an installation according to ISO 7425-2

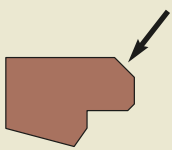

b

rgab.ru Берг АБ bergab@ya.ru Тел. (495)-228-06-21, факс (495) 2

rgab.ru Берг АБ bergab@ya.ru Тел. (495)-228-06-21, факс (495) 2

Tandem sealing systems

Double slide ring seals in system solutions can be assembled in separate grooves after each other, see **fig 5**. The primary seal of a filled PTFE material, providing increased resistance to wear and extrusion, withstands the pressure and pressure peaks. The secondary seal can then work less loaded and limit the lubrication film that can pass the primary seal. The secondary seal could therefore be produced from a low-filled PTFE material, but in case of damages on the primary seal, it is an advantage if both seals are produced from the same PTFE material. We suggest type GS in applications with demands on low friction. For further details, please read under "Tandem sealing systems".

Slide ring seals of PTFE require careful handling and installation, otherwise the slide ring's delicate sealing surface can be damaged, thereby impairing its sealing function.

Depending on the choice of material for the energizing element, slide ring seals of PTFE can be used within a temperature range of –50 to +200 °C and in aggressive pressure media. Always contact the seal supplier concerning slide ring seals for applications where the temperature and pressure fluid differ from normal operating conditions for hydraulic oil in the temperature range of –20 to +110 °C.

System solutions with double slide ring seals assembled in grooves after each other have been commonly used for several years as described under "Slide ring seals of PTFE".

For particularly demanding applications, e.g. cylinders for excavators, tests have been carried out with different types of primary seals, so called buffer seals. Initially they were designed with a rectangular cross section, radially larger that axially. They were assembled in grooves dimensioned to provide a radial deformation of the cross section. However, pressure was then uncontrollably trapped between the buffer seal and the main seal, which often resulted in extrusion of the buffer seal into the interior of the cylinder and eventually it totally lost its function.

Therefore, the primary seal types used in tandem sealing systems must be able to evacuate the pressure trapped between the seals back into the cylinder in the same way as a clack valve. The friction loss in a tandem sealing system is often not higher than that in a single-installation with the same type of main seal.

Fig **5**

Slide ring seal type GS in a tandem sealing system

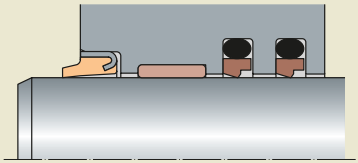

Fig **6**

U-ring seals type SIL in a tandem sealing system

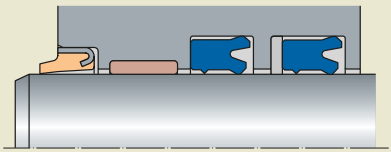

Fig **7**

Slide ring seal type GS in a tandem sealing system with a U-ring seal type SIL and a double-acting wiper seal type SCB + retainer ring

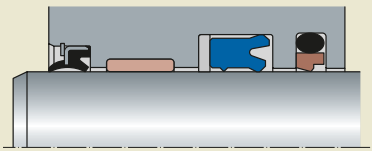

Fig 6 and **7** show some carefully tested tandem sealing systems in common use today.

rgab.ru Берг АБ bergab@ya.ru Тел. (495)-228-06-21, факс (495) 2

rgab.ru Берг АБ bergab@ya.ru Тел. (495)-228-06-21, факс (495) 2

Telescopic cylinders

Telescopic cylinders are designed to work in a way which results in a very large wiped off surface. The amount of leakage is, as mentioned before, proportional to the size of the surface wiped off (the circumference of the rod multiplied by the stroke length). This means that a necessary lubrication film can result in a leakage if the surface is large enough. The demands on both seals and installation therefore increase in a telescopic cylinder.

The space in most telescopic cylinders is very limited, especially for the radial section dimension. Seal types with normal or standardized cross section dimensions can therefore seldom be used. Telescopic cylinders also work under very tough operating conditions. Due to the heavy transverse loads the fitting clearances are added for every step and the total deflection at fully expelled cylinder can be very large. The telescopic cylinders' way of working also often results in rapid and strong pressure changes. Even vacuum may occur in double-acting telescopic cylinders due to the difficulties of reaching a sufficient oil supply. Telescopic cylinders are often used in vehicles. Due to the location close to the roadway, these cylinders are continually exposed to contamination particles.

The tough operating conditions of telescopic cylinders often result in temporary faulty eccentric running in the wiper and seal housing grooves at maximum load. This allows water to pass the wiper seals and cause corrosion in the grooves, which can disturb the sealing function. Type SIL is designed for these conditions, see **fig 8**.

In order to achieve satisfactory results, high demands are also raised for effective wiper seals, guides with small fitting clearances, good surface roughness value in the groove and a minimum of space for the seal to move axially.

Type of seal, wiper and guide is preferably chosen before the telescopic cylinder is designed in detail. It is extremely difficult or impossible to find an optimal sealing solution when the design of the cylinder is already completed or even worse, if the cylinder is already in use and the problems start to occur.

Fig 8

U-ring seal of polyurethane, type SIL

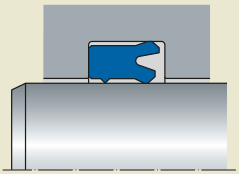

3

rgab.ru Берг АБ bergab@ya.ru Тел. (495)-228-06-21, факс (495) 2

rgab.ru Берг АБ bergab@ya.ru Тел. (495)-228-06-21, факс (495) 2

Small spaces
Type SKY is also designed to be installed in applications with lack of space. SKY is manufactured of nitrile rubber in several dimensions in the range 10 to 1 240 mm, see **fig 9**, but is also available in fluorocarbon rubber. Type SKY is preferably completed with back-up rings of PTFE at pressures over 14 MPa.

Vibrations
Some applications demand seals with radial and axial sections larger than normally used, e.g. in hydraulic cylinders subjected to vibrations. Type AG is an appropriate solution for such applications, see **fig 10**.

V-seal set of fabric reinforced materials can in many applications be replaced by type AG. The central sealing ring of type AG is manufactured of nitrile rubber, the bottom ring of a polyester elastomeric material and the back-up ring of acetal resin.

Pressure
The pressure level affects the rod seal concerning sealing ability, friction and fatigue. Those factors which most determine the risk of damage by extrusion into the clearance between the rod and the cylinder head on the low-pressure side of the seal (normally the atmosphere side) are the bore diameter, the dimensional precision of the guide function, temperature, pressure, the strength of the seal materials and the duration of the pressure cycles.

A common characteristic of most types of seals is that the higher the pressure, the better they seal. The risk of the sealing properties being impaired at pressures of up to 40 MPa is small, provided that the surface of the cylinder tube is in good condition.

It is more difficult for the seal to maintain its sealing properties at low pressure or in zero-pressure conditions. This is especially applicable in extremely cold conditions, when the seal material is hard and less elastic, and the oil has a very high viscosity which makes it difficult to wipe off.

Fig **9**

U-ring of nitrile rubber, type SKY

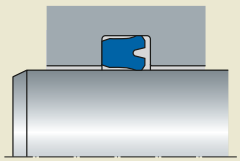

Fig **10**

Compact seal with a large section, type AG

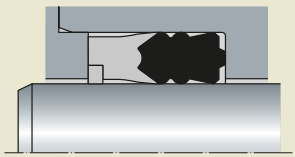

rgab.ru Берг АБ bergab@ya.ru Тел. (495)-228-06-21, факс (495) 2

rgab.ru Берг АБ bergab@ya.ru Тел. (495)-228-06-21, факс (495) 2

Back-up rings

By using seals with back-up rings installed according to the instructions in this catalogue damages by extrusion are avoided in applications with pressures of up to 40 MPa. Some types of seals produced of a very strong polyurethane material with a largely dimensioned back-up ring can work at considerably higher pressures, provided that the clearance is small and the temperature is normal.

It is normally an advantage to use rod seal types with an integrated back-up ring, e.g. SG, see **fig 3**, **page 94**. The back-up ring will then follow the radial movements of the rod since it is affected by the pressure of the hydraulic fluid transmitted through the central sealing ring material. An integrated back-up ring is not subjected to mechanical loads.

In applications where a seal design with an integrated back-up ring is not available for the dimension in question, it is necessary to use a back-up ring with the same radial section dimension as that for the seal. This includes, however, some disadvantages. The back-up ring is not supported by the hydraulic pressure to tightly connect to the rod surface. The back-up ring can also be deformed by mechanical forces when the rod moves radially.

Back-up rings in applications with small sections and seal dimensions and light service conditions are preferably produced of a PTFE material. The back-up ring can then be cut at a 15 to 30° angle to the radial level and be assembled also into closed seal housing grooves.

In applications with very tough operating conditions, e.g. hydraulic cylinders for excavators, integrated back-up rings have prooved to be too aggressive to the rod surface concurrently with continually increased pressures. The maximum strength level of the chromium layer has been passed resulting in the loosening of chromium particles. When they get stuck into the seals and guides they will cause scratches on the rod surface, which in turn causes scratches on the seals resulting in leakage. In order to avoid such problems, installations in excavators are designed with flat back-up rings with the same sectional dimensions as those of the seals. These back-up rings are often called "full-face" and are normally manufactured of acetal resin to reach sufficient material strength. The basic design is split in order to facilitate the assembly.

The most important function of the back-up ring is to improve the seal's resistance to damages through extrusion into the clearance on the seal's low-pressure side. The ability to provide such resistance depends on the material properties of the back-up ring, the cross section dimension of the seal and the back-up ring as well as the clearance size, pressure and temperature. **Diagram 1** shows maximum clearances for different kinds of rod seal materials.

Diagram 1

Maximum clearance at 100°C operating temperature and rod diameter 63 mm

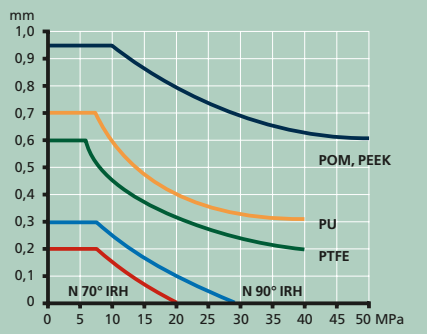

rgab.ru Берг АБ bergab@ya.ru Тел. (495)-228-06-21, факс (495) 2

rgab.ru Берг АБ bergab@ya.ru Тел. (495)-228-06-21, факс (495) 2

Rod surfaces

Long experience has shown that the execution of the rod in its entirety, but above all, the execution of the surface coating to provide wear and corrosion resistance has a significant importance for the function and service life of the seal.

Chromium particles easily come loose from rough rod surfaces. Among other factors, the method of the final treatment of the rod surface before the hard chromium plating has a significant importance for the quality of the final rod surface since it determines the ability of the chromium layer to attach. Also with an optimal pretreatment, an inappropriate final treatment after the hard chromium plating can result in a rough surface from which chromium particles easily come loose. These particles will then cause axial scratches on the rod surface, which in turn cause scratches on the seal resulting in leakage.

Some of the wax used when polishing the chromium layer can be left on the rod surface and contain grit and chromium particles which also can cause axial scratches. For this reason, we suggest the rods always to be cleaned carefully before the assembly, e.g. with solvents or an ordinary washing-up detergent. A well machined, tight chromium layer with a good surface roughness value and smooth characteristics causes less wear of the seal and reduces the risk of axial scratches on the rod. Such surfaces are also more resistant to corrosion. Corrosion damages will almost always result in a disturbed function of the rod seal.

The rod is subjected to mechanical influence in many applications causing surface damages and thereby leakage. For economical reasons, the rods should therefore preferably be be hardened before the surface coating with hard chromium or a combination of nickel and hard chromium. Appropriate hardness value is 55 to 60 HRC to a depth of at least 5 mm.

Surface properties

A surface is usually defined by the surface roughness value µm R_a, i.e. the arithmetic mean deviation of the surface profile. This value does not, however, provide a complete scenario of how the surface can be expected to affect the seal. The reason for this is that two surfaces with the same value stated in µm R_a but with different surface profile characteristics can result in a varying degree of wear.

A surface with smooth profile characteristics provides a longer service life for the seal than a surface characterized by sharp profile details, but still with the same surface roughness value. A more important aspect is therefore the surface profile characteristics, or bearing capacity. The higher bearing capacity, the longer service life of the seal. **Table 1** shows the relation between different surface roughness values and the bearing capacity.

We recommend a surface roughness value for rod and cylinder tube surfaces working against seals of elastomeric materials of maximum 0,3 µm R_a and maximum 0,2 µm R_a surfaces working against PTFE seals. In this recommendation the bearing capacity is taken into consideration and is described as a relation between R_p and R_z according to the below formula:

For surfaces against seals of elastomeric materials:

0,3 R_z 1,2/$R_{p\,max}$ 45% of R_z

For surfaces against PTFE seals:

0,2 R_z 1,2/$R_{p\,max}$ 45% of R_z

We recommend a surface roughness value for the seal housing groove of maximum 0,8 µm R_a and maximum 1,6 µm R_a for other machined surfaces.

rgab.ru Берг АБ bergab@ya.ru Тел. (495)-228-06-21, факс (495) 2

rgab.ru Берг АБ bergab@ya.ru Тел. (495)-228-06-21, факс (495) 2

Table **1**

Surface properties

Surface profile	Pt	$R_{z\,max}$	R_z	R_a	R_p	Mr 1 C 0,25	Mr 2 C 0,25	Bearing capacity graph (Abbott Graph)
	–	–	–	µm	–	–	–	
	1	1	1	0,25	0,2	75 %	75 %	
	1	1	1	0,25	0,8	15 %	15 %	
	1	1	1	0,2	0,2	85 %	85 %	
	1	1	1	0,2	0,8	20 %	20 %	
	1	1	0,4	0,08	0,15	88 %	88 %	
	1	1	0,4	0,08	0,85	7 %	7 %	
	1	1	1	0,2	0,5	25 %	25 %	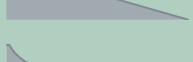
	1	1	1	0,3	0,3	38 %	38 %	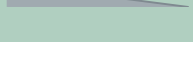
	1	0,5	0,4	0,1	0,2	85 %	17 %	

3

rgab.ru Берг АБ bergab@ya.ru Тел. (495)-228-06-21, факс (495) 2

rgab.ru Берг АБ bergab@ya.ru Тел. (495)-228-06-21, факс (495) 2

Friction

The friction between the seal and the counterface surface depends on a number of factors; surface roughness, surface characteristics, pressure, fluid, seal materials, type of seal and speed of movement.

Own laboratory tests show that the friction loss in tandem sealing systems is not higher than in single-installations. The reason for this is that the primary seal is lubricated from the back by the oil that is gathered between the seals also when the rod moves towards the interior of the cylinder and the primary seal is under pressure. **Diagram 2** illustrates the friction losses for some types of seals in single- and tandem installations.

Seal materials

The usual way of judging seal materials for hydraulic applications is to read the material specifications and try to compare specifications for various materials. This unfortunately leads to several pitfalls. Most specifications and test results can seldom be compared with one another if they have not been carried out in the same way and under the same conditions.

Many test results reproduce values based on test samples produced with standardized forms and sizes. Some properties can then show better values than could be expected from tests with seals from serial production. In particular, this is the case with seals with small cross sections, when e.g. the compression set shows high values. To avoid drawing the wrong conclusions, it is essential that comparisons are based on correct assumptions.

Diagram 2

Friction comparison between different types of rod seals at 25 MPa, 70 °C and 0,2 m/s

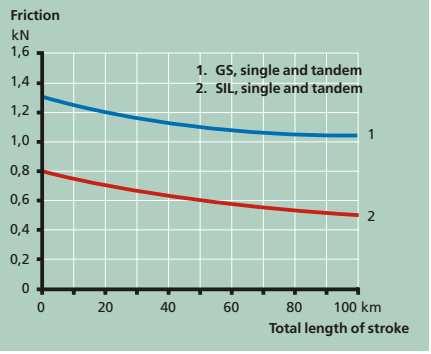

Because of costs and time pressure, test results often show values which have been recorded following short test periods, e.g. 24 or 72 hours. This of course provides a certain amount of information about the properties of the material, but experience has shown that only results from long test periods, normally 1 000 hours, provide reliable bases for comparisons.

The properties which should initially be studied are those most important for the sealing function. We consider the following properties to be the most important:

- compression set,
- elasticity at low temperature (retraction test),
- change of hardness in oil, and
- change of volume in oil.

It is of course not just the material's properties which determine the function of the seal. The design and construction of the seal are just as important, i.e. how the properties of the material can be optimally used for the task which the seal in question has to carry out.

rgab.ru Берг АБ bergab@ya.ru Тел. (495)-228-06-21, факс (495) 2

rgab.ru Берг АБ bergab@ya.ru Тел. (495)-228-06-21, факс (495) 2

Operating temperature

Stating the highest and lowest operating temperatures for a seal of a particular type of material or, most common, combination of materials is very complicated. A number of factors affect each other.

Diagram 3 provides general guidance regarding the operating temperature ranges for different types of regular design seals, and under otherwise normal operating conditions.

During normal use and installation, the respective materials provide satisfactory results within the temperature ranges shown in each column. Problems could begin to arise within the marked areas. Other materials should be chosen for use beyond these limits. Please contact us for further information.

Diagram 3

General guidance, operating temperatures

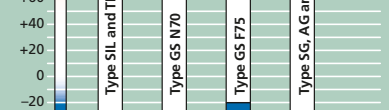

rgab.ru Берг АБ bergab@ya.ru Тел. (495)-228-06-21, факс (495) 2

rgab.ru Берг АБ bergab@ya.ru Тел. (495)-228-06-21, факс (495) 2

Installation
There are great advantages in choosing seal housing sizes and instructions according to international standards (ISO). This provides access to a large number of seal types and makes designed to work in these applications with the optimal proportions regarding the radial and axial dimensions of the seal section as well as the sectional dimension and the diameter of the seal.

Seal housing grooves
It is always an advantage with a design allowing the seal to be assembled into an open housing groove, especially when assembling and disassembling seals with large sections in relation to the rod diameter.

When assembling U-ring seals of polyurethane (TPU) or compact seals of nitrile rubber (N) in closed seal housing grooves, we suggest you to follow the guiding principles in **Table 2** concerning minimum rod diameter at different radial section sizes.

Always make sure that the rod seal can work under full pressure, i.e. the pressure in the hydraulic cylinder. In designs with metal guides in front of the seal (in the pressure direction) it is important to have separate connecting links between the seal housing groove and the interior of the cylinder, see **Table 3**. Otherwise, under unfavourable conditions, pressure can be trapped between the seal and the guide.

Fillet radii for seal housing grooves
Guiding principles for maximum fillet radii in seal housing grooves are stated in the drawings introducing each dimension table, see also **Table 3**.

Groove edges
All groove edges are smoothed and rounded off to R = 0,1 to 0,2.

Assembly lead-in chamfers
The angle of the assembly lead-in chamfers for seals should be 20° to 30°. The length of the chamfers can be chosen from **Table 3**.

Table 2

Recommended rod diameters

Radial section S	Recommended min rod diameter Seal material PU	N
mm	mm	
4	15	25
5	25	40
7,5	40	70
10	70	100

Table 3

Fillet radii and assembly lead-in chamfers

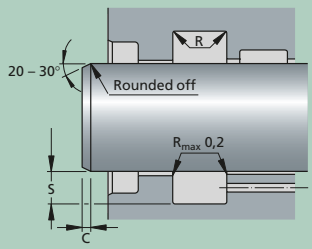

Radial depth S	Fillet radius R	Axial length C
mm		
3,5	0,3	2
4	0,3	2
5	0,3	2,5
7,5	0,4	4
10	0,6	5
12,5	0,8	6,5
15	0,8	7,5
20	1,0	10

rgab.ru Берг АБ bergab@ya.ru Тел. (495)-228-06-21, факс (495) 2

rgab.ru Берг АБ bergab@ya.ru Тел. (495)-228-06-21, факс (495) 2

Assembly tools

Slide ring seals can often be assembled into closed seal housing grooves through carefully bending the slide ring similar to a kidney shape and then insert it into the groove, see **fig 11**. It is very important to avoid sharp bendings. After the assembly, the slide rings should be calibrated to a round form using a calibration tool.

Small seal diameters and serial assembly normally demand the use of assembly tools. These can be produced either with a simple design or with integrated control functions for semi-automatic assembly see **fig 12**. Correctly designed assembly tools make the assembly safer and lessen the risk of damaging the slide ring. After the assembly, the slide ring is calibrated in the same way as previously described.

Fig **11**

The slide ring is carefully bended

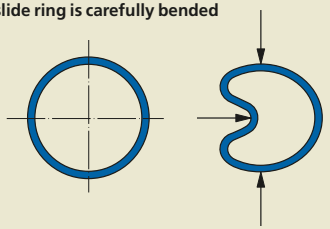

Fig **12**

Tool for the assembly of polyurethane seals into closed housing grooves

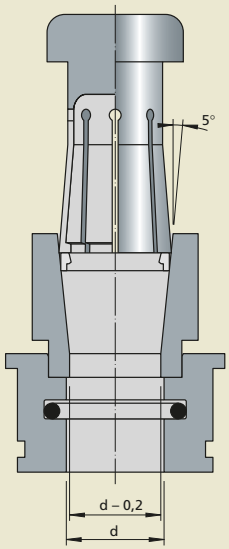

rgab.ru Берг АБ bergab@ya.ru Тел. (495)-228-06-21, факс (495) 2

rgab.ru Берг АБ bergab@ya.ru Тел. (495)-228-06-21, факс (495) 2

Seal design and installation

Our rod seal programme is very extensive regarding the number of seal types as well as material combinations.

Figure 5 in **Matrix 1** represents the most appropriate design and figure 0 the least appropriate. Please select your most important decisive factors when choosing seal design and installation and mark possible solutions. Then study further factors, installation instructions and dimension tables.

The housing groove dimensions (or seal sizes) should be selected in order to make sure that seals of different material combinations can be chosen based on the varying service conditions for cylinders of the same design.

The seal design should be adapted to the manufacturing equipment and methods to be used when producing the cylinder details. See **fig 13** and **14** for the difference between open and closed grooves.

Rod seals

Type/series	**SIL**	**TIL**	**GS**	**SG**	**AG**	**SKY**	**UN**
Material	PU	PU	PTFE N	N POM	N POM	N	PU
Page	**108**	**108**	**114**	**126**	**129**	**130**	**132**
Pressure							
< 16 MPa	5	5	5	5	5	4	4
< 25 MPa	5	5	5	5	5	2	3
< 40 MPa	4	4	4	4	5	0	2
High temperature > +110 °C	4	4	5	5	5	5	4
Low temperature <–30 °C	5	4	4	4	4	4	3
Friction							
pressure = 0	4	4	5	4	3	5	4
pressure > 0	4	3	5	4	3	4	3
Surface sensitivity	5	5	3	3	4	3	5
Tolerance sensitivity	5	5	4	5	5	4	5
Service life	4	4	3	3	4	3	5
Assembly	5	5	3	4	4	5	5
Cost of installation	5	5	5	5	4	5	5
Sealing ability							
pressure = 0	4	4	4	5	5	5	3
pressure > 0	5	5	4	4	4	5	4
Preferred in new designs	X	X	X				

rgab.ru Берг АБ bergab@ya.ru Тел. (495)-228-06-21, факс (495) 2

rgab.ru Берг АБ bergab@ya.ru Тел. (495)-228-06-21, факс (495) 2

Fig **13**

Installation with open groove

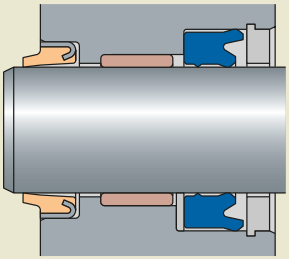

Fig **14**

Installation with closed groove

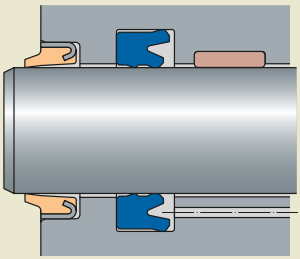

3

Matrix **1**

SI	TI	TILA	S	GL	CH-5 + CH-7	STR	RI
PU	PU	PU POM	N	PTFE N	N	A	A
136	**140**	**140**	**142**	**146**	**152**	**156**	**158**
4 3 2	4 3 2	5 5 4	4 3 2	4 4 3	5 5 3	– – –	– – –
4	4	4	5	5	5	–	–
3	3	3	4	4	5	–	–
4 3	4 3	4 4	4 3	5 5	2 3	– –	– –
5	5	5	3	3	3	–	–
5	5	5	5	4	5	–	–
5	4	4	2	2	5	–	–
5	5	5	5	3	4	–	–
5	5	5	5	5	3	–	–
3 5	4 5	4 5	5 4	4 3	4 4	– –	– –

rgab.ru Берг АБ bergab@ya.ru Тел. (495)-228-06-21, факс (495) 2

rgab.ru Берг АБ bergab@ya.ru Тел. (495)-228-06-21, факс (495) 2

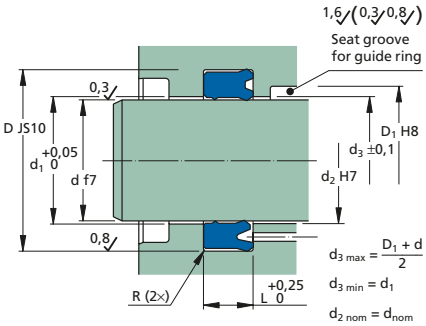

Type SIL, TIL
Rod seal of polyurethane with a secondary sealing edge.
The housing dimension and tolerances stated are applicable at pressures of up to 40 MPa. Applications with higher pressures demand special housing dimensions. Please contact us for advice.

Dimensions					Designation	ISO 5597
d	D	L	d_1	R		
mm					–	
15	26	8	15,2	0,3	**CR SIL 15×26×8**	
16	24	6,3	16,2	0,3	**CR TIL 16×24×6.3**	•
	24	7	16,2	0,3	**CR TIL 16×24×7**	
20	26	5,5	20,2	0,3	**CR SIL 20×26×5.5**	
	28	6,3	20,2	0,3	**CR TIL 20×28×6.3**	•
	30	8	20,2	0,3	**CR TIL 20×30×8**	•
	30	9	20,2	0,3	**CR SIL 20×30×9**	
25	33	6,3	25,2	0,3	**CR TIL 25×33×6.3**	•
	33	7	25,2	0,3	**CR SIL 25×33×7**	
	33	11	25,2	0,3	**CR SIL 25×33×11**	
	35	8	25,2	0,3	**CR TIL 25×35×8**	•
	35	9	25,2	0,3	**CR SIL 25×35×9**	
	35	9	25,2	0,3	**CR TIL 25×35×9**	
	35	11	25,2	0,3	**CR SIL 25×35×11**	
28	38	8	28,2	0,3	**CR SIL 28×38×8**	•
	38	8	28,2	0,3	**CR TIL 28×38×8**	•
30	40	8	30,2	0,3	**CR SIL 30×40×8**	
	40	8	30,2	0,3	**CR TIL 30×40×8**	
	40	11	30,2	0,3	**CR SIL 30×40×11**	
32	40	9	32,2	0,3	**CR TIL 32×40×9**	
	42	8	32,2	0,3	**CR TIL 32×42×8**	•
	42	11	32,2	0,3	**CR SIL 32×42×11**	
33	43	11	33,2	0,3	**CR SIL 33×43×11**	
35	45	8	35,2	0,3	**CR TIL 35×45×8**	
	45	11	35,2	0,3	**CR SIL 35×45×11**	
	50	11	35,2	0,4	**CR TIL 35×50×11**	
36	46	8	36,2	0,3	**CR SIL 36×46×8**	•
	46	11	36,2	0,3	**CR SIL 36×46×11**	
38	50	9,5	38,2	0,3	**CR TIL 38×50×9.5**	

Dimensions					Designation	ISO 5597
d	D	L	d_1	R		
mm					–	
40	50	8	40,2	0,3	**CR SIL 40×50×8**	•
	50	8	40,2	0,3	**CR TIL 40×50×8**	•
	50	11	40,2	0,3	**CR SIL 40×50×11**	
	50	11	40,2	0,3	**CR TIL 40×50×11**	
	55	11	40,2	0,4	**CR SIL 40×55×11**	
	60	11	40,2	0,6	**CR TIL 40×60×11**	
45	53	9	45,2	0,3	**CR TIL 45×53×9**	
	55	8	45,2	0,3	**CR SIL 45×55×8**	•
	55	8	45,2	0,3	**CR TIL 45×55×8**	•
	55	11	45,2	0,3	**CR SIL 45×55×11**	
	55	12,5	45,2	0,3	**CR SIL 45×55×12.5**	
	60	11	45,2	0,4	**CR SIL 45×60×11**	
50	57	11	50,2	0,3	**CR SIL 50×57×11**	
	58	12,5	50,2	0,3	**CR SIL 50×58×12.5**	
	60	8	50,2	0,3	**CR SIL 50×60×8**	•
	60	8	50,2	0,3	**CR TIL 50×60×8**	•
	60	11	50,2	0,3	**CR SIL 50×60×11**	
	60	11	50,2	0,3	**CR TIL 50×60×11**	
	62,7	10,5	50,2	0,3	**CR TIL 50×62.7×10.5**	
	65	11	50,2	0,4	**CR SIL 50×65×11**	
	65	12,5	50,2	0,4	**CR SIL 50×65×12.5**	•
55	65	9,5	55,2	0,3	**CR SIL 55×65×9.5**	
	65	11	55,2	0,3	**CR SIL 55×65×11**	
56	66	11	56,2	0,3	**CR SIL 56×66×11**	
	71	12,5	56,2	0,4	**CR SIL 56×71×12.5**	•
60	70	12,5	60,2	0,3	**CR SIL 60×70×12.5**	
	70	13	60,2	0,3	**CR SIL 60×70×13**	
	75	11	60,2	0,4	**CR SIL 60×75×11**	
	75	13	60,2	0,4	**CR SIL 60×75×13**	
63	73	13	63,2	0,3	**CR SIL 63×73×13**	
	75	13	63,2	0,3	**CR SIL 63×75×13**	
	78	12,5	63,2	0,4	**CR SIL 63×78×12.5**	•
	83	13	63,2	0,6	**CR SIL 63×83×13**	
	83	14,5	63,2	0,6	**CR SIL 63×83×14.5**	
	83	16	63,2	0,6	**CR SIL 63×83×16**	•

rgab.ru Берг АБ bergab@ya.ru Тел. (495)-228-06-21, факс (495) 2

rgab.ru Берг АБ bergab@ya.ru Тел. (495)-228-06-21, факс (495) 2

Dimensions					Designation	ISO 5597
d	D	L	d_1	R		
mm					–	
65	75	12,5	65,2	0,3	**CR SIL 65×75×12.5**	
	75	13	65,2	0,3	**CR SIL 65×75×13**	
70	78	12,5	70,2	0,3	**CR SIL 70×78×12.5**	
	80	9	70,2	0,3	**CR SIL 70×80×9**	
	80	12,5	70,2	0,3	**CR SIL 70×80×12.5**	
	80	13	70,2	0,3	**CR SIL 70×80×13**	
	85	12,5	70,2	0,4	**CR SIL 70×85×12.5**	•
	90	13	70,2	0,6	**CR SIL 70×90×13**	
75	85	9,5	75,2	0,3	**CR SIL 75×85×9.5**	
	85	12,5	75,2	0,3	**CR SIL 75×85×12.5**	
	85	13	75,2	0,3	**CR TIL 75×85×13**	
78	86	9,5	78,2	0,3	**CR SIL 78×86×9.5**	
	86	12,5	78,2	0,3	**CR SIL 78×86×12.5**	
80	88	12,5	80,2	0,3	**CR SIL 80×88×12.5**	
	90	13	80,2	0,3	**CR SIL 80×90×13**	
	95	12,5	80,2	0,4	**CR SIL 80×95×12.5**	•
	95	13	80,2	0,4	**CR SIL 80×95×13**	
	100	13	80,2	0,6	**CR SIL 80×100×13**	
	100	16	80,2	0,6	**CR SIL 80×100×16**	•
85	100	13	85,2	0,4	**CR SIL 85×100×13**	
90	100	12,5	90,2	0,3	**CR SIL 90×100×12.5**	
	105	12,5	90,2	0,4	**CR SIL 90×105×12.5**	•
	110	13	90,2	0,6	**CR SIL 90×110×13**	
95	103	12,5	95,2	0,3	**CR SIL 95×103×12.5**	
	105	9,5	95,2	0,3	**CR SIL 95×105×9.5**	
100	110	12,5	100,2	0,3	**CR SIL 100×110×12.5**	
	120	13	100,2	0,6	**CR SIL 100×120×13**	
	120	16	100,2	0,6	**CR SIL 100×120×16**	•
105	115	12,5	105,2	0,3	**CR SIL 105×115×12.5**	
110	118	12,5	110,2	0,3	**CR SIL 110×118×12.5**	
	130	16	110,2	0,6	**CR SIL 110×130×16**	•

Dimensions					Designation	ISO 5597
d	D	L	d_1	R		
mm					–	
113	123	9,5	113,2	0,3	**CR SIL 113×123×9.5**	
115	125	15	115,2	0,3	**CR SIL 115×125×15**	
120	130	12,5	120,2	0,3	**CR SIL 120×130×12.5**	
	140	13	120,2	0,6	**CR SIL 120×140×13**	
125	133	12,5	125,2	0,3	**CR SIL 125×133×12.5**	
127	140	12,5	127,2	0,3	**CR SIL 127×140×12.5**	
132	142	9,5	132,2	0,3	**CR SIL 132×142×9.5**	
135	150	12,5	135,2	0,4	**CR SIL 135×150×12.5**	
140	148	12,5	140,2	0,3	**CR SIL 140×148×12.5**	
	150	12,5	140,2	0,3	**CR SIL 140×150×12.5**	
155	163	12,5	155,2	0,3	**CR SIL 155×163×12.5**	
160	170	12,5	160,2	0,3	**CR SIL 160×170×12.5**	
165	184	14	165,2	0,3	**CR SIL 165×184×14**	
170	178	12,5	170,2	0,3	**CR SIL 170×178×12.5**	
180	195	12,5	180,2	0,4	**CR SIL 180×195×12.5**	
185	193	12,5	185,2	0,3	**CR SIL 185×193×12.5**	
200	208	12,5	200,2	0,3	**CR SIL 200×208×12.5**	
205	220	13,5	205,2	0,4	**CR SIL 205×220×13.5**	

rgab.ru Берг АБ bergab@ya.ru Тел. (495)-228-06-21, факс (495) 2

rgab.ru Берг АБ bergab@ya.ru Тел. (495)-228-06-21, факс (495) 2

Rod seals series G

Sealpool slide ring seals are designated according to a system which clearly states the seal series, type, dynamic sealing diameter (rod), nominal housing groove diameter, housing groove width and material, see **Table 1**.

Seal series/type

All types of series G consist of a dynamically sealing slide ring of PTFE and a static, elastomeric part which also functions as an interference element, see **fig 1** and **Table 5**, **page 112**. They are designed for applications demanding low friction, small housing dimensions and a long service life. The housing dimensions in accordance with ISO 7425-2 of series G are marked with a dot (•) in the product table, starting on **page 114**.

Seal materials

The choice of seal materials always includes a compromise between advantages and disadvantages. Slide ring seals can be delivered with slide rings of several different PTFE materials and of polyurethane or polyethylene. The materials which we most often suggest are stated in **Table 3** and **4**. Please also read **Table 6**, **page 113**.

There is a large number of different PTFE materials with variants of fillers, e.g. glass fibre, carbon, graphite, molybdenum disulphide, metal oxides, polymeric fillers and combinations of different fillers. Each possesses different properties appropriate for different applications and service conditions.

Unfilled PTFE provides most often a lower friction than a filled PTFE material and the lowest degree of wear of the cylinder tube surface. However, its own resistance to wear and deformation under load is limited.

Common for all filled PTFE materials is their different degree of better resistance to wear and deformation.

Slide rings of polyurethane normally provide higher friction but also a higher sealing ability than those of a PTFE material.

Table 1

Designation codes for rod seals series G

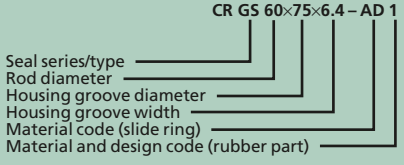

Fig 1

Designs series G

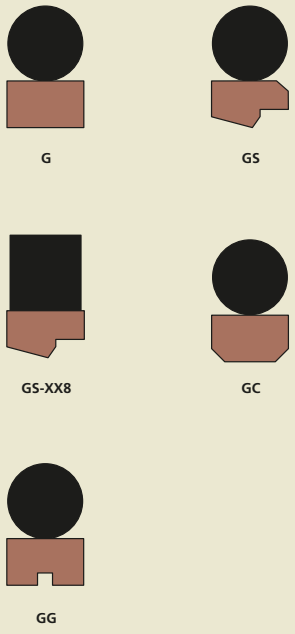

rgab.ru Берг АБ bergab@ya.ru Тел. (495)-228-06-21, факс (495) 2

rgab.ru Берг АБ bergab@ya.ru Тел. (495)-228-06-21, факс (495) 2

Table 2

Housing groove sections

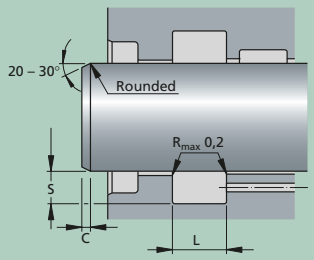

Groove width	Radial section ISO	Radial section non ISO	Axial length
L	S	S	C
mm			
2,2	2,5	2,45	3
3,2	3,75	3,65	5
4,2	5,5	5,35	7
6,3	7,75	7,55	10
8,1	10,5	10,25	12
8,1	12,25	12	12
9,5	14	13,65	15

Table 3

Slide rings, material codes

Code	MS	Material type
AA	100	Unfilled PTFE (FDA approved)
AB	231	PTFE + low degree of metal oxide
AC	271	PTFE + polyoxybensoate (polymer)
AD	292	PTFE + bronze + molybdenum disulphide
AE	302	PTFE + carbon + graphite powder
AG	851	PTFE + carbon fibre
BK	426	PE-UHMW

Table 4

Rubber parts, material and design codes

Code	MS	Rubber type
1	N70	Nitrile rubber, 70° IRH
2	N84	Nitrile rubber, low temperature, 70° IRH
3	F75	Fluorocarbon rubber, 75° IRH
4	Q70	Silicone rubber, 70° IRH
5	E70	Ethylene-propylene rubber (EPDM), 70° IRH
6	HN80	Hydrogenated nitrile rubber, 80° IRH
7	N70	X-ring XR, nitrile rubber, 70° IRH
8	N70	Square ring, nitrile rubber, 70° IRH

rgab.ru Берг АБ bergab@ya.ru Тел. (495)-228-06-21, факс (495) 2

rgab.ru Берг АБ bergab@ya.ru Тел. (495)-228-06-21, факс (495) 2

Table **5**

Description and field of application of the slide ring seals

Type	Profile	Description	Application field
G		Double-acting, sharp edges, no notches	Appropriate for impure media
GC		Double-acting, chamfered against the dynamic surface	The chamfer provides improved protection against extrusion
GG		Double-acting, grooves in the slide surface	Improved sealing ability
GN		Double-acting, with notches	For rapid pressure changes
GR		Double-acting, chamfers, notches and grooves in the dynamic surface and a radius on the static side	Appropriate for rotating and turning applications
GH-XX8		Double-acting, square ring as a static sealing element	Provides a decreased surface pressure against the dynamic surface and an increased sealing ability
GS		Single-acting slide ring seal	Applications with high demands on sealing ability
GXS		Single-acting slide ring seal with a full-face back up ring	Designed to withstand high pressure

rgab.ru Берг АБ bergab@ya.ru Тел. (495)-228-06-21, факс (495) 2

rgab.ru Берг АБ bergab@ya.ru Тел. (495)-228-06-21, факс (495) 2

Table **6**

Choice of material

Medium	Material, contact surface	MS Code, seal	O-ring
Hydraulic oil Lubrication oil (mineral oil based)	Steel: min 33 HRC Chromed surface, cast iron	1) MS-292 (bronze filled) 2) MS-361 (glass fibre) 3) MS-426 PE-UHMW (max +80 °C)	MS-N70 MS-F75
	Stainless steel, aluminium, anodized or chromed bronze	1) MS-302 (carbon filled) 2) MS-851 (carbon fibre) 3) MS-426 PE-UHMW (max +80 °C)	
Water Water/glycol	Steel: min 33 HRC Chromed surface, cast iron, stainless steel, aluminium, anodized or chromed bronze	1) MS-302 (carbon filled) 2) MS-851 (carbon fibre) 3) MS-304 (carbon filled) 4) MS-426 PE-UHMW (max +80 °C)	MS-N70 MS-F75 MS-E70
Water/oil emulsion			MS-N70 MS-F75
Hot water/steam	Steel: min 33 HRC Chromed surface, cast iron, stainless steel, aluminium, anodized or chromed bronze	1) MS-302 (carbon filled) 2) MS-851 (carbon fibre) 3) MS-304 (carbon filled)	MS-E70
Air, lubricated service Air, unlubricated service	Steel: min 33 HRC Chromed surface, cast iron	1) MS-426 PE-UHMW (max +80 °C) 2) MS-361 (glass fibre) 3) MS-221, MS-231 (low-filled + colour pigment, only lubricated service)	MS-N70
	Stainless steel, aluminium, anodized or chromed bronze	1) MS-426 PE-UHMW (max +80 °C) 2) MS-302 (carbon filled) 3) MS-851 (carbon fibre) 4) MS-304 (carbon filled)	

3

rgab.ru Берг АБ bergab@ya.ru Тел. (495)-228-06-21, факс (495) 2

rgab.ru Берг АБ bergab@ya.ru Тел. (495)-228-06-21, факс (495) 2

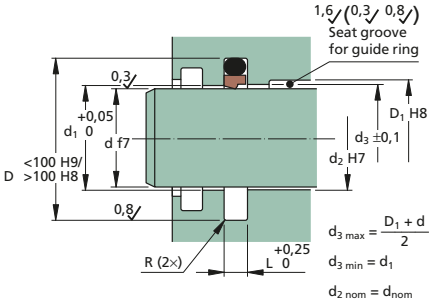

Type GS
Slide ring of bronze filled PTFE and O-ring of nitrile rubber.

Choose d_1 for the pressure range in question according to the tables. The housing dimensions and tolerances stated are applicable at pressures up to 40 MPa.

In applications with higher pressures d_1 and d normally need to be adjusted according to e.g. d_1 = H7 and d = f7, when guide rings are not used d_2.

In applications with operation conditions demanding a diametrical clearance nominally smaller than 0,4 mm (incl. the tolerance) a separate guide ring should be avoided.

For housing groove and assembly chamfer dimensions please see **Table 2, page 111.**

Dimensions							Designation	ISO 7425-2
d	D	L	d_1 at pressure (MPa) 0 – 16	(16) – 25	(25) – 40	R		
mm							–	
4	9	2,2	4,4	4,3	4,2	0,2	**CR GS 4×9×2.2-AD1**	
	8,9	2,2	4,4	4,3	4,2	0,2	**CR GS 4×8.9×2.2-AD1**	
5	10	2,2	5,4	5,3	5,2	0,2	**CR GS 5×10×2.2-AD1**	
	9,9	2,2	5,4	5,3	5,2	0,2	**CR GS 5×9.9×2.2-AD1**	
6	11	2,2	6,4	6,3	6,2	0,5	**CR GS 6×11×2.2-AD1**	•
	10,9	2,2	6,4	6,3	6,2	0,2	**CR GS 6×10.9×2.2-AD1**	
8	13	2,2	8,4	8,3	8,2	0,5	**CR GS 8×13×2.2-AD1**	•
	12,9	2,2	8,4	8,3	8,2	0,2	**CR GS 8×12.9×2.2-AD1**	
10	15	2,2	10,4	10,3	10,2	0,5	**CR GS 10×15×2.2-AD1**	•
	14,9	2,2	10,4	10,3	10,2	0,2	**CR GS 10×14.9×2.2-AD1**	
	17,5	3,2	10,4	10,3	10,2	0,3	**CR GS 10×17.5×3.2-AD1**	
	17,3	3,2	10,4	10,3	10,2	0,3	**CR GS 10×17.3×3.2-AD1**	
12	17	2,2	12,4	12,3	12,2	0,5	**CR GS 12×17×2.2-AD1**	•
	16,9	2,2	12,4	12,3	12,2	0,2	**CR GS 12×16.9×2.2-AD1**	
	19,5	3,2	12,4	12,3	12,2	0,5	**CR GS 12×19.5×3.2-AD1**	•
	19,3	3,2	12,4	12,3	12,2	0,3	**CR GS 12×19.3×3.2-AD1**	
14	19	2,2	14,4	14,3	14,2	0,5	**CR GS 14×19×2.2-AD1**	•
	18,9	2,2	14,4	14,3	14,2	0,2	**CR GS 14×18.9×2.2-AD1**	
	21,5	3,2	14,4	14,3	14,2	0,5	**CR GS 14×21.5×3.2-AD1**	•
	21,3	3,2	14,4	14,3	14,2	0,3	**CR GS 14×21.3×3.2-AD1**	
15	20	2,2	15,4	15,3	15,2	0,2	**CR GS 15×20×2.2-AD1**	
	19,9	2,2	15,4	15,3	15,2	0,2	**CR GS 15×19.9×2.2-AD1**	
	22,5	3,2	15,4	15,3	15,2	0,3	**CR GS 15×22.5×3.2-AD1**	
	22,3	3,2	15,4	15,3	15,2	0,3	**CR GS 15×22.3×3.2-AD1**	
16	21	2,2	16,4	16,3	16,2	0,2	**CR GS 16×21×2.2-AD1**	
	20,9	2,2	16,4	16,3	16,2	0,2	**CR GS 16×20.9×2.2-AD1**	
	23,5	3,2	16,4	16,3	16,2	0,5	**CR GS 16×23.5×3.2-AD1**	•
	23,3	3,2	16,4	16,3	16,2	0,3	**CR GS 16×23.3×3.2-AD1**	
18	23	2,2	18,4	18,3	18,2	0,2	**CR GS 18×23×2.2-AD1**	
	22,9	2,2	18,4	18,3	18,2	0,2	**CR GS 18×22.9×2.2-AD1**	
	25,5	3,2	18,4	18,3	18,2	0,5	**CR GS 18×25.5×3.2-AD1**	•
	25,3	3,2	18,4	18,3	18,2	0,3	**CR GS 18×25.3×3.2-AD1**	

rgab.ru Берг АБ bergab@ya.ru Тел. (495)-228-06-21, факс (495) 2

rgab.ru Берг АБ bergab@ya.ru Тел. (495)-228-06-21, факс (495) 2

Dimensions							Designation	ISO 7425-2
d	D	L	d_1 at pressure (MPa) 0 – 16	(16) – 25	(25) – 40	R		
mm							–	
20	27,5	3,2	20,4	20,3	20,2	0,5	**CR GS 20×27.5×3.2-AD1**	•
	27,3	3,2	20,4	20,3	20,2	0,3	**CR GS 20×27.3×3.2-AD1**	
	31	4,2	20,5	20,4	20,3	0,5	**CR GS 20×31×4.2-AD1**	•
	30,7	4,2	20,5	20,4	20,3	0,5	**CR GS 20×30.7×4.2-AD1**	
22	29,5	3,2	22,4	22,3	22,2	0,5	**CR GS 22×29.5×3.2-AD1**	•
	29,3	3,2	22,4	22,3	22,2	0,3	**CR GS 22×29.3×3.2-AD1**	
	33	4,2	22,5	22,4	22,3	0,5	**CR GS 22×33×4.2-AD1**	•
	32,7	4,2	22,5	22,4	22,3	0,5	**CR GS 22×32.7×4.2-AD1**	
25	32,5	3,2	25,4	25,3	25,2	0,5	**CR GS 25×32.5×3.2-AD1**	•
	32,3	3,2	25,4	25,3	25,2	0,3	**CR GS 25×32.3×3.2-AD1**	
	36	4,2	25,5	25,4	25,3	0,5	**CR GS 25×36×4.2-AD1**	•
	35,7	4,2	25,5	25,4	25,3	0,5	**CR GS 25×35.7×4.2-AD1**	
28	35,5	3,2	28,4	28,3	28,2	0,3	**CR GS 28×35.5×3.2-AD1**	
	35,3	3,2	28,4	28,3	28,2	0,3	**CR GS 28×35.3×3.2-AD1**	
	39	4,2	28,5	28,4	25,3	0,5	**CR GS 28×39×4.2-AD1**	•
	38,7	4,2	28,5	28,4	25,3	0,5	**CR GS 28×38.7×4.2-AD1**	
30	41	4,2	30,5	30,4	30,3	0,5	**CR GS 30×41×4.2-AD1**	
	40,7	4,2	30,5	30,4	30,3	0,5	**CR GS 30×40.7×4.2-AD1**	
32	43	4,2	32,5	32,4	32,3	0,5	**CR GS 32×43×4.2-AD1**	•
	42,7	4,2	32,5	32,4	32,3	0,5	**CR GS 32×42.7×4.2-AD1**	
35	46	4,2	35,5	35,4	35,3	0,5	**CR GS 35×46×4.2-AD1**	
	45,7	4,2	35,5	35,4	35,3	0,5	**CR GS 35×45.7×4.2-AD1**	
36	47	4,2	36,5	36,4	36,3	0,5	**CR GS 36×47×4.2-AD1**	•
	46,7	4,2	36,5	36,4	36,3	0,5	**CR GS 36×46.7×4.2-AD1**	
	51,5	6,3	36,6	36,5	36,4	0,7	**CR GS 36×51.5×6.3-AD1**	
	51,1	6,3	36,6	36,5	36,4	0,7	**CR GS 36×51.1×6.3-AD1**	
40	51	4,2	40,5	40,4	40,3	0,5	**CR GS 40×51×4.2-AD1**	•
	50,7	4,2	40,5	40,4	40,3	0,5	**CR GS 40×50.7×4.2-AD1**	
	55,5	6,3	40,6	40,5	40,4	0,7	**CR GS 40×55.5×6.3-AD1**	
	55,3	6,3	40,6	40,5	40,4	0,7	**CR GS 40×55.3×6.3-AD1**	

rgab.ru Берг АБ bergab@ya.ru Тел. (495)-228-06-21, факс (495) 2

rgab.ru Берг АБ bergab@ya.ru Тел. (495)-228-06-21, факс (495) 2

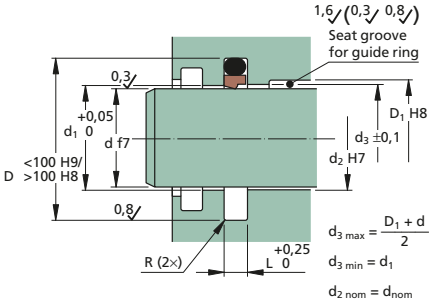

Type GS
Slide ring of bronze filled PTFE and O-ring of nitrile rubber.

Choose d_1 for the pressure range in question according to the tables. The housing dimensions and tolerances stated are applicable at pressures up to 40 MPa.

In applications with higher pressures d_1 and d normally need to be adjusted according to e.g. d_1 = H7 and d = f7, when guide rings are not used d_2.

In applications with operation conditions demanding a diametrical clearance nominally smaller than 0,4 mm (incl. the tolerance) a separate guide ring should be avoided.

For housing groove and assembly chamfer dimensions please see **Table 2, page 111.**

Dimensions							Designation	ISO 7425-2
d	D	L	d_1 at pressure (MPa) 0 – 16	(16) – 25	(25) – 40	R		
mm							–	
45	56	4,2	45,5	45,4	45,3	0,5	**CR GS 45×56×4.2-AD1**	•
	55,7	4,2	45,5	45,4	45,3	0,5	**CR GS 45×55.7×4.2-AD1**	
	60,5	6,3	45,6	45,5	45,4	0,7	**CR GS 45×60.5×6.3-AD1**	
	60,1	6,3	45,6	45,5	45,4	0,7	**CR GS 45×60.1×6.3-AD1**	
50	61	4,2	50,5	50,4	50,3	0,5	**CR GS 50×61×4.2-AD1**	•
	60,7	4,2	50,5	50,4	50,3	0,5	**CR GS 50×60.7×4.2-AD1**	
	65,5	6,3	50,6	50,5	50,4	0,7	**CR GS 50×65.5×6.3-AD1**	
	65,1	6,3	50,6	50,5	50,4	0,7	**CR GS 50×65.1×6.3-AD1**	
55	66	4,2	55,5	55,4	55,3	0,5	**CR GS 55×66×4.2-AD1**	
	65,7	4,2	55,5	55,4	55,3	0,5	**CR GS 55×65.7×4.2-AD1**	
	70,5	6,3	55,6	55,5	55,4	0,7	**CR GS 55×70.5×6.3-AD1**	
	70,1	6,3	55,6	55,5	55,4	0,7	**CR GS 55×70.1×6.3-AD1**	
56	67	4,2	56,5	56,4	56,3	0,5	**CR GS 56×67×4.2-AD1**	•
	66,7	4,2	56,5	56,4	56,3	0,5	**CR GS 56×66.7×4.2-AD1**	
	71,5	6,3	56,6	56,5	56,4	0,5	**CR GS 56×71.5×6.3-AD1**	•
	71,1	6,3	56,6	56,5	56,4	0,7	**CR GS 56×71.1×6.3-AD1**	
60	71	4,2	60,5	60,4	60,3	0,5	**CR GS 60×71×4.2-AD1**	
	70,7	4,2	60,5	60,4	60,3	0,5	**CR GS 60×70.7×4.2-AD1**	
	75,5	6,3	60,6	60,5	60,4	0,7	**CR GS 60×75.5×6.3-AD1**	
	75,1	6,3	60,6	60,5	60,4	0,7	**CR GS 60×75.1×6.3-AD1**	
63	74	4,2	63,5	63,4	63,3	0,5	**CR GS 63×74×4.2-AD1**	•
	73,7	4,2	63,5	63,4	63,3	0,5	**CR GS 63×73.7×4.2-AD1**	
	78,5	6,3	63,6	63,5	63,4	0,5	**CR GS 63×78.5×6.3-AD1**	•
	78,1	6,3	63,6	63,5	63,4	0,7	**CR GS 63×78.1×6.3-AD1**	
65	80,5	6,3	65,6	65,5	65,4	0,7	**CR GS 65×80.5×6.3-AD1**	
	80,1	6,3	65,6	65,5	65,4	0,7	**CR GS 65×80.1×6.3-AD1**	
70	85,5	6,3	70,6	70,5	70,4	0,9	**CR GS 70×85.5×6.3-AD1**	•
	85,1	6,3	70,6	70,5	70,4	0,7	**CR GS 70×85.1×6.3-AD1**	
75	90,5	6,3	75,6	75,5	75,4	0,9	**CR GS 75×90.5×6.3-AD1**	
	90,1	6,3	75,6	75,5	75,4	0,7	**CR GS 75×90.1×6.3-AD1**	
80	95,5	6,3	80,6	80,5	80,4	0,9	**CR GS 80×95.5×6.3-AD1**	•
	95,1	6,3	80,6	80,5	80,4	0,7	**CR GS 80×95.1×6.3-AD1**	

rgab.ru Берг АБ bergab@ya.ru Тел. (495)-228-06-21, факс (495) 2

rgab.ru Берг АБ bergab@ya.ru Тел. (495)-228-06-21, факс (495) 2

Dimensions							Designation	ISO 7425-2
d	D	L	d_1 at pressure (MPa) 0 – 16	(16) – 25	(25) – 40	R		
mm							–	
85	100,5	6,3	85,6	85,5	85,4	0,7	**CR GS 85×100.5×6.3-AD1**	
	100,1	6,3	85,6	85,5	85,4	0,7	**CR GS 85×100.1×6.3-AD1**	
90	105,5	6,3	90,6	90,5	90,4	0,9	**CR GS 90×105.5×6.3-AD1**	•
	105,1	6,3	90,6	90,5	90,4	0,9	**CR GS 90×105.1×6.3-AD1**	•
95	110,5	6,3	95,6	95,5	95,4	0,7	**CR GS 95×110.5×6.3-AD1**	
	110,1	6,3	95,6	95,5	95,4	0,7	**CR GS 95×110.1×6.3-AD1**	
100	115,5	6,3	100,6	100,5	100,4	0,9	**CR GS 100×115.5×6.3-AD1**	•
	115,1	6,3	100,6	100,5	100,4	0,7	**CR GS 100×115.1×6.3-AD1**	
105	120,5	6,3	105,6	105,5	105,4	0,7	**CR GS 105×120.5×6.3-AD1**	
	120,1	6,3	105,6	105,5	105,4	0,7	**CR GS 105×120.1×6.3-AD1**	
110	125,5	6,3	110,6	110,5	110,4	0,9	**CR GS 110×125.5×6.3-AD1**	•
	125,1	6,3	110,6	110,5	110,4	0,7	**CR GS 110×125.1×6.3-AD1**	
115	130,5	6,3	115,6	115,5	115,4	0,7	**CR GS 110×130.5×6.3-AD1**	
	130,1	6,3	115,6	115,5	115,4	0,7	**CR GS 115×130.1×6.3-AD1**	
120	135,5	6,3	120,6	120,5	120,4	0,7	**CR GS 120×135.5×6.3-AD1**	
	135,1	6,3	120,6	120,5	120,4	0,7	**CR GS 120×135.1×6.3-AD1**	
125	140,5	6,3	125,6	125,5	125,4	0,9	**CR GS 125×140.5×6.3-AD1**	•
	140,1	6,3	125,6	125,5	125,4	0,7	**CR GS 125×140.1×6.3-AD1**	
130	145,5	6,3	130,6	130,5	130,4	0,7	**CR GS 130×145.5×6.3-AD1**	
	145,1	6,3	130,6	130,5	130,4	0,7	**CR GS 130×145.1×6.3-AD1**	
135	150,5	6,3	135,6	130,5	130,4	0,7	**CR GS 135×150.5×6.3-AD1**	
	150,1	6,3	135,6	130,5	130,4	0,7	**CR GS 135×150.1×6.3-AD1**	
140	155,5	6,3	140,6	140,5	140,4	0,9	**CR GS 140×155.5×6.3-AD1**	•
	155,1	6,3	140,6	140,5	140,4	0,7	**CR GS 140×155.1×6.3-AD1**	
145	160,5	6,3	145,6	140,5	140,4	0,7	**CR GS 145×160.5×6.3-AD1**	
	160,1	6,3	145,6	140,5	140,4	0,7	**CR GS 145×160.1×6.3-AD1**	
150	165,5	6,3	150,6	150,5	150,4	0,7	**CR GS 150×165.5×6.3-AD1**	
	165,1	6,3	150,6	150,5	150,4	0,7	**CR GS 150×165.1×6.3-AD1**	

rgab.ru Берг АБ bergab@ya.ru Тел. (495)-228-06-21, факс (495) 2

ergab.ru Берг АБ bergab@ya.ru Тел. (495)-228-06-21, факс (495) 22

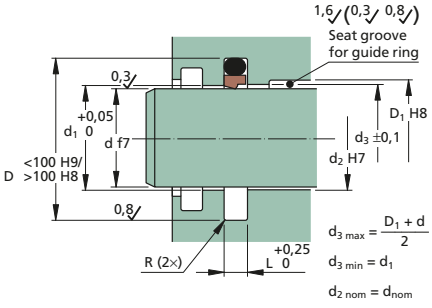

Type GS
Slide ring of bronze filled PTFE and O-ring of nitrile rubber.

Choose d_1 for the pressure range in question according to the tables. The housing dimensions and tolerances stated are applicable at pressures up to 40 MPa.

In applications with higher pressures d_1 and d normally need to be adjusted according to e.g. d_1 = H7 and d = f7, when guide rings are not used d_2.

In applications with operation conditions demanding a diametrical clearance nominally smaller than 0,4 mm (incl. the tolerance) a separate guide ring should be avoided.

For housing groove and assembly chamfer dimensions please see **Table 2, page 111.**

Dimensions							Designation	ISO 7425-2
d	D	L	d_1 at pressure (MPa) 0 – 16	(16) – 25	(25) – 40	R		
mm							–	
155	170,5	6,3	155,6	155,5	155,4	0,7	**CR GS 155×170.5×6.3-AD1**	
	170,1	6,3	155,6	155,5	155,4	0,7	**CR GS 155×170.1×6.3-AD1**	
160	175,5	6,3	160,6	160,5	160,4	0,9	**CR GS 160×175.5×6.3-AD1**	•
	175,1	6,3	160,6	160,5	160,4	0,7	**CR GS 160×175.1×6.3-AD1**	
	181	8,1	161,8	160,6	160,5	0,9	**CR GS 160×181×8.1-AD1**	•
	180,5	8,1	161,8	160,6	160,5	1,2	**CR GS 160×180.5×8.1-AD1**	
165	180,5	6,3	165,6	160,5	160,4	0,7	**CR GS 165×180.5×6.3-AD1**	
	180,1	6,3	165,6	160,5	160,4	0,7	**CR GS 165×180.1×6.3-AD1**	
	186	8,1	165,8	165,6	165,5	1,2	**CR GS 165×186×8.1-AD1**	
	185,5	8,1	165,8	165,6	165,5	1,2	**CR GS 165×185.5×8.1-AD1**	
170	185,5	6,3	170,6	170,5	170,4	0,7	**CR GS 170×185.5×6.3-AD1**	
	185,1	6,3	170,6	170,5	170,4	0,7	**CR GS 170×185.1×6.3-AD1**	
	191	8,1	170,8	170,6	170,5	1,2	**CR GS 170×191×8.1-AD1**	
	190,5	8,1	170,8	170,6	170,5	1,2	**CR GS 170×190.5×8.1-AD1**	
175	190,5	6,3	175,6	175,5	175,4	0,7	**CR GS 175×190.5×6.3-AD1**	
	190,1	6,3	175,6	175,5	175,4	0,7	**CR GS 175×190.1×6.3-AD1**	
	196	8,1	175,8	175,6	175,5	1,2	**CR GS 175×196×8.1-AD1**	
	195,5	8,1	175,8	175,6	175,5	1,2	**CR GS 175×195.5×8.1-AD1**	
180	195,5	6,3	180,6	180,5	180,4	0,9	**CR GS 180×195.5×6.3-AD1**	•
	195,1	6,3	180,6	180,5	180,4	0,7	**CR GS 180×195.1×6.3-AD1**	
	201	8,1	180,8	180,6	180,5	0,9	**CR GS 180×201×8.1-AD1**	•
	200,5	8,1	180,8	180,6	180,5	1,2	**CR GS 180×200.5×8.1-AD1**	
185	200,5	6,3	185,6	185,5	185,4	0,7	**CR GS 185×200.5×6.3-AD1**	
	200,1	6,3	185,6	185,5	185,4	0,7	**CR GS 185×200.1×6.3-AD1**	
	206	8,1	185,8	185,6	185,5	1,2	**CR GS 185×206×8.1-AD1**	
	205,5	8,1	185,8	185,6	185,5	1,2	**CR GS 185×205.5×8.1-AD1**	
190	205,5	6,3	190,6	190,5	190,4	0,7	**CR GS 190×205.5×6.3-AD1**	
	205,1	6,3	190,6	190,5	190,4	0,7	**CR GS 190×205.1×6.3-AD1**	
	211	8,1	190,8	190,6	190,5	1,2	**CR GS 190×211×8.1-AD1**	
	210,5	8,1	190,8	190,6	190,5	1,2	**CR GS 190×210.5×8.1-AD1**	
195	210,5	6,3	195,6	195,5	195,4	0,7	**CR GS 195×210.5×6.3-AD1**	
	210,1	6,3	195,6	195,5	195,4	0,7	**CR GS 195×210.1×6.3-AD1**	
	216	8,1	195,8	195,6	195,5	1,2	**CR GS 195×216×8.1-AD1**	
	215,5	8,1	195,8	195,6	195,5	1,2	**CR GS 195×215.5×8.1-AD1**	

ergab.ru Берг АБ bergab@ya.ru Тел. (495)-228-06-21, факс (495) 22

rgab.ru Берг АБ bergab@ya.ru Тел. (495)-228-06-21, факс (495) 2

Dimensions							Designation	ISO 7425-2
d	D	L	d_1 at pressure (MPa) 0 – 16	(16) – 25	(25) – 40	R		
mm							–	
200	215,5	6,3	200,6	200,5	200,4	0,7	**CR GS 200×215.5×6.3-AD1**	
	215,1	6,3	200,6	200,5	200,4	0,7	**CR GS 200×215.1×6.3-AD1**	
	221	8,1	200,8	200,6	200,5	0,9	**CR GS 200×221×8.1-AD1**	•
	220,5	8,1	200,8	200,6	200,5	1,2	**CR GS 200×220.5×8.1-AD1**	
210	225,5	6,3	210,6	210,5	210,4	0,7	**CR GS 210×225.5×6.3-AD1**	
	225,1	6,3	210,6	210,5	210,4	0,7	**CR GS 210×225.1×6.3-AD1**	
	231	8,1	210,8	210,6	210,5	1,2	**CR GS 210×231×8.1-AD1**	
	230,5	8,1	210,8	210,6	210,5	1,2	**CR GS 210×230.5×8.1-AD1**	
220	235,5	6,3	220,6	220,5	220,4	0,7	**CR GS 220×235.5×6.3-AD1**	
	235,5	6,3	220,6	220,5	220,4	0,7	**CR GS 220×235.5×6.3-AD1**	
	241	8,1	220,8	220,6	220,5	0,9	**CR GS 220×241×8.1-AD1**	•
	240,5	8,1	220,8	220,6	220,5	1,2	**CR GS 220×240.5×8.1-AD1**	
230	245,5	6,3	230,6	230,5	230,4	0,7	**CR GS 230×245.5×6.3-AD1**	
	245,1	6,3	230,6	230,5	230,4	0,7	**CR GS 230×245.1×6.3-AD1**	
	251	8,1	230,8	230,6	230,5	1,2	**CR GS 230×251×8.1-AD1**	
	250,5	8,1	230,8	230,6	230,5	1,2	**CR GS 230×250.5×8.1-AD1**	
240	255,5	6,3	240,6	240,5	240,4	0,7	**CR GS 240×255.5×6.3-AD1**	
	255,1	6,3	240,6	240,5	240,4	0,7	**CR GS 240×255.1×6.3-AD1**	
	261	8,1	240,8	240,6	240,5	1,2	**CR GS 240×261×8.1-AD1**	
	260,5	8,1	240,8	240,6	240,5	1,2	**CR GS 240×260.5×8.1-AD1**	
250	271	8,1	250,8	250,6	250,5	0,9	**CR GS 250×271×8.1-AD1**	•
	270,5	8,1	250,8	250,6	250,5	1,2	**CR GS 250×270.5×8.1-AD1**	
	274,5	8,1	250,8	250,6	250,5	1,2	**CR GS 250×274.5×8.1-AD1**	
	274	8,1	250,8	250,6	250,5	1,2	**CR GS 250×274×8.1-AD1**	
260	281	8,1	260,8	260,6	260,5	1,2	**CR GS 260×281×8.1-AD1**	
	280,5	8,1	260,8	260,6	260,5	1,2	**CR GS 260×280.5×8.1-AD1**	
	284,5	8,1	260,8	260,6	260,5	1,2	**CR GS 260×284.5×8.1-AD1**	
	284	8,1	260,8	260,6	260,5	1,2	**CR GS 260×284×8.1-AD1**	
270	291	8,1	270,8	270,6	270,5	1,2	**CR GS 270×291×8.1-AD1**	
	290,5	8,1	270,8	270,6	270,5	1,2	**CR GS 270×290.5×8.1-AD1**	
	294,5	8,1	270,8	270,6	270,5	1,2	**CR GS 270×294.5×8.1-AD1**	
	294	8,1	270,8	270,6	270,5	1,2	**CR GS 270×294×8.1-AD1**	

rgab.ru Берг АБ bergab@ya.ru Тел. (495)-228-06-21, факс (495) 2

rgab.ru Берг АБ bergab@ya.ru Тел. (495)-228-06-21, факс (495) 2

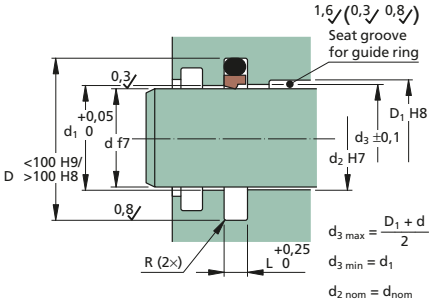

Type GS
Slide ring of bronze filled PTFE and O-ring of nitrile rubber.

Choose d_1 for the pressure range in question according to the tables. The housing dimensions and tolerances stated are applicable at pressures up to 40 MPa.

In applications with higher pressures d_1 and d normally need to be adjusted according to e.g. d_1 = H7 and d = f7, when guide rings are not used d_2.

In applications with operation conditions demanding a diametrical clearance nominally smaller than 0,4 mm (incl. the tolerance) a separate guide ring should be avoided.

For housing groove and assembly chamfer dimensions please see **Table 2, page 111.**

Dimensions							Designation	ISO 7425-2
d	D	L	d_1 at pressure (MPa) 0 – 16	(16) – 25	(25) – 40	R		
mm							–	
280	301	8,1	280,8	280,6	280,5	1,2	**CR GS 280×301×8.1-AD1**	
	300,5	8,1	280,8	280,6	280,5	1,2	**CR GS 280×300.5×8.1-AD1**	
	304,5	8,1	280,8	280,6	280,5	0,9	**CR GS 280×304.5×8.1-AD1**	•
	304	8,1	280,8	280,6	280,5	1,2	**CR GS 280×304×8.1-AD1**	
290	311	8,1	290,8	290,6	290,5	1,2	**CR GS 290×311×8.1-AD1**	
	310,5	8,1	290,8	290,6	290,5	1,2	**CR GS 290×310.5×8.1-AD1**	
	314,5	8,1	290,8	290,6	290,5	1,2	**CR GS 290×314.5×8.1-AD1**	
	314	8,1	290,8	290,6	290,5	1,2	**CR GS 290×314×8.1-AD1**	
300	321	8,1	300,8	300,6	300,5	1,2	**CR GS 300×321×8.1-AD1**	
	320,5	8,1	300,8	300,6	300,5	1,2	**CR GS 300×320.5×8.1-AD1**	
	324,5	8,1	300,8	300,6	300,5	1,2	**CR GS 300×324.5×8.1-AD1**	
	324	8,1	300,8	300,6	300,5	1,2	**CR GS 300×324×8.1-AD1**	
310	331	8,1	310,8	310,6	310,5	1,2	**CR GS 310×331×8.1-AD1**	
	330,5	8,1	310,8	310,6	310,5	1,2	**CR GS 310×330.5×8.1-AD1**	
	334,5	8,1	310,8	310,6	310,5	1,2	**CR GS 310×334.5×8.1-AD1**	
	334	8,1	310,8	310,6	310,5	1,2	**CR GS 310×334×8.1-AD1**	
320	341	8,1	320,8	320,6	320,5	1,2	**CR GS 320×341×8.1-AD1**	
	340,5	8,1	320,8	320,6	320,5	1,2	**CR GS 320×340.5×8.1-AD1**	
	344,5	8,1	320,8	320,6	320,5	0,9	**CR GS 320×344.5×8.1-AD1**	•
	344	8,1	320,8	320,6	320,5	1,2	**CR GS 320×344×8.1-AD1**	
330	351	8,1	330,8	330,6	330,5	1,2	**CR GS 330×351×8.1-AD1**	
	350,5	8,1	330,8	330,6	330,5	1,2	**CR GS 330×350.5×8.1-AD1**	
	354,5	8,1	330,8	330,6	330,5	1,2	**CR GS 330×354.5×8.1-AD1**	
	354	8,1	330,8	330,6	330,5	1,2	**CR GS 330×354×8.1-AD1**	
340	361	8,1	340,8	340,6	340,5	1,2	**CR GS 340×361×8.1-AD1**	
	360,5	8,1	340,8	340,6	340,5	1,2	**CR GS 340×360.5×8.1-AD1**	
	364,5	8,1	340,8	340,6	340,5	1,2	**CR GS 340×364.5×8.1-AD1**	
	364	8,1	340,8	340,6	340,5	1,2	**CR GS 340×364×8.1-AD1**	
350	371	8,1	350,8	350,6	350,5	1,2	**CR GS 350×371×8.1-AD1**	
	370,5	8,1	350,8	350,6	350,5	1,2	**CR GS 350×370.5×8.1-AD1**	
	374,5	8,1	350,8	350,6	350,5	1,2	**CR GS 350×374.5×8.1-AD1**	
	374	8,1	350,8	350,6	350,5	1,2	**CR GS 350×374×8.1-AD1**	

rgab.ru Берг АБ bergab@ya.ru Тел. (495)-228-06-21, факс (495) 2

rgab.ru Берг АБ bergab@ya.ru Тел. (495)-228-06-21, факс (495) 2

Dimensions							Designation	ISO 7425-2
d	D	L	d_1 at pressure (MPa) 0 – 16	(16) – 25	(25) – 40	R		
mm							–	
360	381	8,1	360,8	360,6	360,5	1,2	**CR GS 360×381×8.1-AD1**	
	380,5	8,1	360,8	360,6	360,5	1,2	**CR GS 360×380.5×8.1-AD1**	
	384,5	8,1	360,8	360,6	360,5	0,9	**CR GS 360×384.5×8.1-AD1**	•
	384	8,1	360,8	360,6	360,5	1,2	**CR GS 360×384×8.1-AD1**	
370	394,5	8,1	370,8	370,6	370,5	1,2	**CR GS 370×394.5×8.1-AD1**	
	394	8,1	370,8	370,6	370,5	1,2	**CR GS 370×394×8.1-AD1**	
380	404,5	8,1	380,8	380,6	380,5	1,2	**CR GS 380×404.5×8.1-AD1**	
	404	8,1	380,8	380,6	380,5	1,2	**CR GS 380×404×8.1-AD1**	
390	414,5	8,1	390,8	390,6	390,5	1,2	**CR GS 390×414.5×8.1-AD1**	
	414	8,1	390,8	390,6	390,5	1,2	**CR GS 390×414×8.1-AD1**	
400	424,5	8,1	400,8	400,6	400,5	1,2	**CR GS 400×424.5×8.1-AD1**	
	424	8,1	400,8	400,6	400,5	1,2	**CR GS 400×424×8.1-AD1**	
410	434,5	8,1	410,8	410,6	410,5	1,2	**CR GS 410×434.5×8.1-AD1**	
	434	8,1	410,8	410,6	410,5	1,2	**CR GS 410×434×8.1-AD1**	
420	444,5	8,1	420,8	420,6	420,5	1,2	**CR GS 420×444.5×8.1-AD1**	
	444	8,1	420,8	420,6	420,5	1,2	**CR GS 420×444×8.1-AD1**	
430	454,5	8,1	430,8	430,6	430,5	1,2	**CR GS 430×454.5×8.1-AD1**	
	454	8,1	430,8	430,6	430,5	1,2	**CR GS 430×454×8.1-AD1**	
440	464,5	8,1	440,8	440,6	440,5	1,2	**CR GS 440×464.5×8.1-AD1**	
	464	8,1	440,8	440,6	440,5	1,2	**CR GS 440×464×8.1-AD1**	
450	474,5	8,1	450,8	450,6	450,5	1,2	**CR GS 450×474.5×8.1-AD1**	
	474	8,1	450,8	450,6	450,5	1,2	**CR GS 450×474×8.1-AD1**	
460	484,5	8,1	460,8	460,6	460,5	1,2	**CR GS 460×484.5×8.1-AD1**	
	484	8,1	460,8	460,6	460,5	1,2	**CR GS 460×484×8.1-AD1**	
470	494,5	8,1	470,8	470,6	470,5	1,2	**CR GS 470×494.5×8.1-AD1**	
	494	8,1	470,8	470,6	470,5	1,2	**CR GS 470×494×8.1-AD1**	
480	504,5	8,1	480,8	480,6	480,5	1,2	**CR GS 480×504.5×8.1-AD1**	
	504	8,1	480,8	480,6	480,5	1,2	**CR GS 480×504×8.1-AD1**	

rgab.ru Берг АБ bergab@ya.ru Тел. (495)-228-06-21, факс (495) 2

rgab.ru Берг АБ bergab@ya.ru Тел. (495)-228-06-21, факс (495) 22

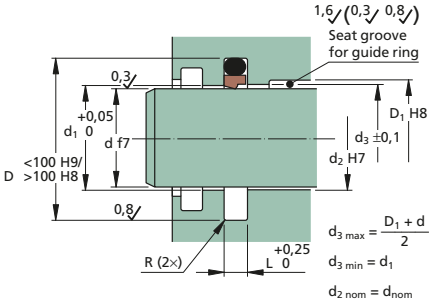

Type GS
Slide ring of bronze filled PTFE and O-ring of nitrile rubber.

Choose d_1 for the pressure range in question according to the tables. The housing dimensions and tolerances stated are applicable at pressures up to 40 MPa.

In applications with higher pressures d_1 and d normally need to be adjusted according to e.g. d_1 = H7 and d = f7, when guide rings are not used d_2.

In applications with operation conditions demanding a diametrical clearance nominally smaller than 0,4 mm (incl. the tolerance) a separate guide ring should be avoided.

For housing groove and assembly chamfer dimensions please see **Table 2, page 111.**

Dimensions							Designation	ISO 7425-2
d	D	L	d_1 at pressure (MPa) 0 – 16	(16) – 25	(25) – 40	R		
mm							–	
490	514,5	8,1	490,8	490,6	490,5	1,2	**CR GS 490×514.5×8.1-AD1**	
	514	8,1	490,8	490,6	490,5	1,2	**CR GS 490×514×8.1-AD1**	
500	524,5	8,1	500,8	500,6	500,5	1,2	**CR GS 500×524.5×8.1-AD1**	
	524	8,1	500,8	500,6	500,5	1,2	**CR GS 500×524×8.1-AD1**	
510	534,5	8,1	510,8	510,6	510,5	1,2	**CR GS 510×534.5×8.1-AD1**	
	534	8,1	510,8	510,6	510,5	1,2	**CR GS 510×534×8.1-AD1**	
520	544,5	8,1	520,8	520,6	520,5	1,2	**CR GS 520×544.5×8.1-AD1**	
	544	8,1	520,8	520,6	520,5	1,2	**CR GS 520×544×8.1-AD1**	
530	554,5	8,1	530,8	530,6	530,5	1,2	**CR GS 530×554.5×8.1-AD1**	
	554	8,1	530,8	530,6	530,5	1,2	**CR GS 530×554×8.1-AD1**	
540	564,5	8,1	540,8	540,6	540,5	1,2	**CR GS 540×564.5×8.1-AD1**	
	564	8,1	540,8	540,6	540,5	1,2	**CR GS 540×564×8.1-AD1**	
550	574,5	8,1	550,8	550,6	550,5	1,2	**CR GS 550×574.5×8.1-AD1**	
	574	8,1	550,8	550,6	550,5	1,2	**CR GS 550×574×8.1-AD1**	
560	584,5	8,1	560,8	560,6	560,5	1,2	**CR GS 560×584.5×8.1-AD1**	
	584	8,1	560,8	560,6	560,5	1,2	**CR GS 560×584×8.1-AD1**	
570	594,5	8,1	570,8	570,6	570,5	1,2	**CR GS 570×594.5×8.1-AD1**	
	594	8,1	570,8	570,6	570,5	1,2	**CR GS 570×594×8.1-AD1**	
580	604,5	8,1	580,8	580,6	580,5	1,2	**CR GS 580×604.5×8.1-AD1**	
	604	8,1	580,8	580,6	580,5	1,2	**CR GS 580×604×8.1-AD1**	
590	614,5	8,1	590,8	590,6	590,5	1,2	**CR GS 590×614.5×8.1-AD1**	
	614	8,1	590,8	590,6	590,5	1,2	**CR GS 590×614×8.1-AD1**	
600	624,5	8,1	600,8	600,6	600,5	1,2	**CR GS 600×624.5×8.1-AD1**	
	624	8,1	600,8	600,6	600,5	1,2	**CR GS 600×624×8.1-AD1**	
610	634,5	8,1	610,8	610,6	610,5	1,2	**CR GS 610×634.5×8.1-AD1**	
	634	8,1	610,8	610,6	610,5	1,2	**CR GS 610×634×8.1-AD1**	
620	644,5	8,1	620,8	620,6	620,5	1,2	**CR GS 620×644.5×8.1-AD1**	
	644	8,1	620,8	620,6	620,5	1,2	**CR GS 620×644×8.1-AD1**	

rgab.ru Берг АБ bergab@ya.ru Тел. (495)-228-06-21, факс (495) 22

rgab.ru Берг АБ bergab@ya.ru Тел. (495)-228-06-21, факс (495) 2

Dimensions							Designation	ISO 7425-2
d	D	L	d_1 at pressure (MPa) 0 – 16	(16) – 25	(25) – 40	R		
mm							–	
630	654,5	8,1	630,8	630,6	630,5	1,2	**CR GS 630×654.5×8.1-AD1**	
	654	8,1	630,8	630,6	630,5	1,2	**CR GS 630×654×8.1-AD1**	
640	664,5	8,1	640,8	640,6	640,5	1,2	**CR GS 640×664.5×8.1-AD1**	
	664	8,1	640,8	640,6	640,5	1,2	**CR GS 640×664×8.1-AD1**	
660	688	9,5	661	660,8	660,6	1,5	**CR GS 660×688×9.5-AD1**	
	687,3	9,5	661	660,8	660,6	1,5	**CR GS 660×687.3×9.5-AD1**	
680	708	9,5	681	680,8	680,6	1,5	**CR GS 680×708×9.5-AD1**	
	707,3	9,5	681	680,8	680,6	1,5	**CR GS 680×707.3×9.5-AD1**	
700	728	9,5	701	700,8	700,6	1,5	**CR GS 700×728×9.5-AD1**	
	727,3	9,5	701	700,8	700,6	1,5	**CR GS 700×727.3×9.5-AD1**	
720	748	9,5	721	720,8	720,6	1,5	**CR GS 720×748×9.5-AD1**	
	747,3	9,5	721	720,8	720,6	1,5	**CR GS 720×747.3×9.5-AD1**	
740	768	9,5	741	740,8	740,6	1,5	**CR GS 740×768×9.5-AD1**	
	767,3	9,5	741	740,8	740,6	1,5	**CR GS 740×767.3×9.5-AD1**	
760	788	9,5	761	760,8	760,6	1,5	**CR GS 760×788×9.5-AD1**	
	787,3	9,5	761	760,8	760,6	1,5	**CR GS 760×787.3×9.5-AD1**	
780	808	9,5	781	780,8	780,6	1,5	**CR GS 780×808×9.5-AD1**	
	807,3	9,5	781	780,8	780,6	1,5	**CR GS 780×807.3×9.5-AD1**	
800	828	9,5	801	800,8	800,6	1,5	**CR GS 800×828×9.5-AD1**	
	827,3	9,5	801	800,8	800,6	1,5	**CR GS 800×827.3×9.5-AD1**	
820	848	9,5	821	820,8	820,6	1,5	**CR GS 820×848×9.5-AD1**	
	847,3	9,5	821	820,8	820,6	1,5	**CR GS 820×847.3×9.5-AD1**	
840	868	9,5	841	840,8	840,6	1,5	**CR GS 840×868×9.5-AD1**	
	867,3	9,5	841	840,8	840,6	1,5	**CR GS 840×867.3×9.5-AD1**	
860	888	9,5	861	860,8	860,6	1,5	**CR GS 860×888×9.5-AD1**	
	887,3	9,5	861	860,8	860,6	1,5	**CR GS 860×887.3×9.5-AD1**	
880	908	9,5	881	880,8	880,6	1,5	**CR GS 880×908×9.5-AD1**	
	907,3	9,5	881	880,8	880,6	1,5	**CR GS 880×907.3×9.5-AD1**	

rgab.ru Берг АБ bergab@ya.ru Тел. (495)-228-06-21, факс (495) 2

rgab.ru Берг АБ bergab@ya.ru Тел. (495)-228-06-21, факс (495) 2

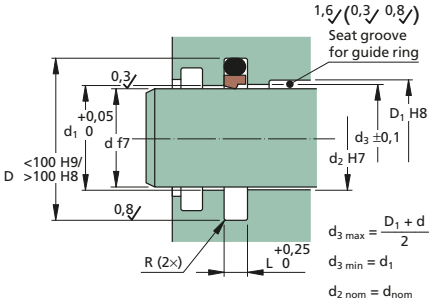

Type GS
Slide ring of bronze filled PTFE and O-ring of nitrile rubber.

Choose d_1 for the pressure range in question according to the tables. The housing dimensions and tolerances stated are applicable at pressures up to 40 MPa.

In applications with higher pressures d_1 and d normally need to be adjusted according to e.g. d_1 = H7 and d = f7, when guide rings are not used d_2.

In applications with operation conditions demanding a diametrical clearance nominally smaller than 0,4 mm (incl. the tolerance) a separate guide ring should be avoided.

For housing groove and assembly chamfer dimensions please see **Table 2, page 111.**

Dimensions							Designation	ISO 7425-2
d	D	L	d_1 at pressure (MPa) 0 – 16	(16) – 25	(25) – 40	R		
mm							–	
900	928	9,5	901	900,8	900,6	1,5	**CR GS 900×928×9.5-AD1**	
	927,3	9,5	901	900,8	900,6	1,5	**CR GS 900×927.3×9.5-AD1**	
920	948	9,5	921	921,8	921,6	1,5	**CR GS 920×948×9.5-AD1**	
	947,3	9,5	921	921,8	921,6	1,5	**CR GS 920×947.3×9.5-AD1**	
940	968	9,5	941	940,8	940,6	1,5	**CR GS 940×968×9.5-AD1**	
	967,3	9,5	941	940,8	940,6	1,5	**CR GS 940×967.3×9.5-AD1**	
960	988	9,5	961	960,8	960,6	1,5	**CR GS 960×988×9.5-AD1**	
	987,3	9,5	961	960,8	960,6	1,5	**CR GS 960×987.3×9.5-AD1**	
980	1 008	9,5	981	980,8	980,6	1,5	**CR GS 980×1008×9.5-AD1**	
	1 007,3	9,5	981	980,8	980,6	1,5	**CR GS 980×1007.3×9.5-AD1**	
1 000	1 028	9,5	1 001	1 000,8	1 000,6	1,5	**CR GS 1000×1028×9.5-AD1**	
	1 027,3	9,5	1 001	1 000,8	1 000,6	1,5	**CR GS 1000×1027.3×9.5-AD1**	

rgab.ru Берг АБ bergab@ya.ru Тел. (495)-228-06-21, факс (495) 2

rgab.ru Берг АБ bergab@ya.ru Тел. (495)-228-06-21, факс (495) 2

rgab.ru Берг АБ bergab@ya.ru Тел. (495)-228-06-21, факс (495) 2

rgab.ru Берг АБ bergab@ya.ru Тел. (495)-228-06-21, факс (495) 2

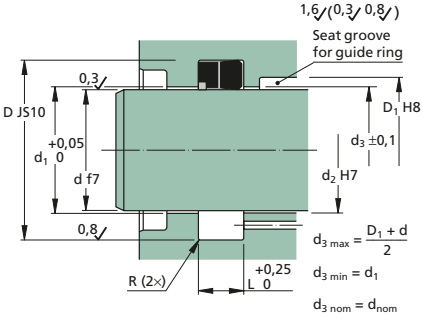

Type SG
Sealing ring of nitrile rubber with reinforcement of fibre reinforced rubber or a fabric reinforced rubber material and back-up ring of acetal resin.
The housing dimensions and tolerances stated are applicable at pressures of up to 28 MPa.
Applications with higher pressures demand special housing dimensions.

Dimensions					Designation	ISO 5597
d	D	L	d_1	R		
mm					–	
6	14	6,3	6,5	0,3	**CR SG 6×14×6.3**	•
16	24	7	16,5	0,3	**CR SG 16×24×7**	
	26	8	16,5	0,3	**CR SG 16×26×8**	•
18	28	11	18,5	0,3	**CR SG 18×28×11**	
20	27	6,3	20,5	0,3	**CR SG 20×27×6.3**	
	30	8,5	20,5	0,3	**CR SG 20×30×8.5**	
	32	10	20,6	0,3	**CR SG 20×32×10**	
22	35	10	22,6	0,3	**CR SG 22×35×10**	
25	33	7	25,5	0,3	**CR SG 25×33×7**	
	35	8,5	25,5	0,3	**CR SG 25×35×8.5**	
	38	10	25,5	0,3	**CR SG 25×38×10**	
28	38	8	28,5	0,3	**CR SG 28×38×8**	•
	40	9,5	28,6	0,3	**CR SG 28×40×9.5**	
	41	10	28,6	0,3	**CR SG 28×41×10**	
30	38	6,3	30,5	0,3	**CR SG 30×38×6.3**	
	40	7,5	30,5	0,3	**CR SG 30×40×7.5**	
	40	11	30,5	0,3	**CR SG 30×40×11**	
	42	10	30,6	0,3	**CR SG 30×42×10**	
	45	9,5	30,6	0,4	**CR SG 30×45×9.5**	
	45	11	30,6	0,4	**CR SG 30×45×11**	
	50	14,5	30,6	0,6	**CR SG 30×50×14.5**	
32	40	9	32,5	0,3	**CR SG 32×40×9**	
	42	8,5	32,5	0,3	**CR SG 32×42×8.5**	
	45	10	32,6	0,3	**CR SG 32×45×10**	
35	44	10	35,5	0,3	**CR SG 35×44×10**	
	45	7	35,5	0,3	**CR SG 35×45×7**	
	45	11	35,5	0,3	**CR SG 35×45×11**	
	50	11	35,6	0,4	**CR SG 35×50×11**	
36	46	8,5	36,5	0,3	**CR SG 36×46×8.5**	

Dimensions					Designation	ISO 5597
d	D	L	d_1	R		
mm					–	
40	48	6,3	40,5	0,3	**CR SG 40×48×6.3**	
	50	11	40,5	0,3	**CR SG 40×50×11**	
	55	8	40,6	0,4	**CR SG 40×55×8**	
	55	11	40,6	0,4	**CR SG 40×55×11**	
	60	10,5	40,6	0,6	**CR SG 40×60×10.5**	
	60	11	40,6	0,6	**CR SG 40×60×11**	
	60	14,5	40,6	0,6	**CR SG 40×60×14.5**	
42	52	9	42,5	0,3	**CR SG 42×52×9**	
45	53	8,5	45,5	0,3	**CR SG 45×53×8.5**	
	53	11	45,5	0,3	**CR SG 45×53×11**	
	55	8	45,5	0,3	**CR SG 45×55×8**	•
	55	11	45,5	0,3	**CR SG 45×55×11**	
	60	10,5	45,6	0,4	**CR SG 45×60×10.5**	
	60	12,5	45,6	0,4	**CR SG 45×60×12.5**	•
	63	11	45,6	0,3	**CR SG 45×63×11**	
	65	14,5	45,6	0,6	**CR SG 45×65×14.5**	
48	60	11	48,6	0,3	**CR SG 48×60×11**	
50	60	8	50,5	0,3	**CR SG 50×60×8**	•
	60	10,5	50,5	0,3	**CR SG 50×60×10.5**	
	62	10	50,6	0,3	**CR SG 50×62×10**	
	65	11	50,7	0,4	**CR SG 50×65×11**	
	70	14,5	50,8	0,6	**CR SG 50×70×14.5**	
55	65	11	55,5	0,3	**CR SG 55×65×11**	
	70	11	55,7	0,4	**CR SG 55×70×11**	
	75	14,5	55,8	0,6	**CR SG 55×75×14.5**	
56	66	10,5	56,5	0,3	**CR SG 56×66×10.5**	
	76	14,5	56,8	0,6	**CR SG 56×76×14.5**	
60	70	10	60,5	0,3	**CR SG 60×70×10**	
	70	11	60,5	0,3	**CR SG 60×70×11**	
	70	13	60,5	0,3	**CR SG 60×70×13**	
	72	10	60,6	0,3	**CR SG 60×72×10**	
	75	13	60,7	0,4	**CR SG 60×75×13**	
	80	12	60,8	0,6	**CR SG 60×80×12**	
	80	14,5	60,8	0,6	**CR SG 60×80×14.5**	

rgab.ru Берг АБ bergab@ya.ru Тел. (495)-228-06-21, факс (495) 2

rgab.ru Берг АБ bergab@ya.ru Тел. (495)-228-06-21, факс (495) 22

Dimensions d	D	L	d_1	R	Designation	ISO 5597
mm					–	
63	75	10,5	63,6	0,3	**CR SG 63×75×10.5**	
	83	14,5	63,8	0,6	**CR SG 63×83×14.5**	
65	75	13,5	65,5	0,3	**CR SG 65×75×13.5**	
	80	11,5	65,7	0,4	**CR SG 65×80×11.5**	
	80	12,5	65,7	0,4	**CR SG 65×80×12.5**	
	85	14,5	65,8	0,6	**CR SG 65×85×14.5**	
70	80	13	70,5	0,3	**CR SG 70×80×13**	
	85	12,5	70,7	0,4	**CR SG 70×85×12.5**	•
	90	14,5	70,8	0,6	**CR SG 70×90×14.5**	
75	85	11	75,5	0,3	**CR SG 75×85×11**	
	85	12,5	75,6	0,3	**CR SG 75×85×12.5**	
	90	11,5	75,7	0,4	**CR SG 75×90×11.5**	
	95	14,5	75,8	0,6	**CR SG 75×95×14.5**	
80	90	11	80,5	0,3	**CR SG 80×90×11**	
	90	13	80,5	0,3	**CR SG 80×90×13**	
	95	12,5	80,7	0,4	**CR SG 80×95×12.5**	•
	100	14,5	80,8	0,6	**CR SG 80×100×14.5**	
85	100	12,5	85,7	0,4	**CR SG 85×100×12.5**	
	105	14,5	85,8	0,6	**CR SG 85×105×14.5**	
90	100	11	90,5	0,3	**CR SG 90×100×11**	
	105	9,5	90,7	0,4	**CR SG 90×105×9.5**	
	110	12,5	90,8	0,6	**CR SG 90×110×12.5**	
95	105	11	95,5	0,3	**CR SG 95×105×11**	
	115	14,5	95,8	0,6	**CR SG 95×115×14.5**	
100	110	11,5	100,5	0,3	**CR SG 100×110×11.5**	
	113	13,5	100,6	0,3	**CR SG 100×113×13.5**	
	115	12,5	100,7	0,4	**CR SG 100×115×12.5**	
	120	14,5	100,8	0,6	**CR SG 100×120×14.5**	
105	115	11	105,5	0,3	**CR SG 105×115×11**	
	125	14,5	105,8	0,6	**CR SG 105×125×14.5**	
110	124	9,5	110,6	0,3	**CR SG 110×124×9.5**	
	130	13	110,8	0,6	**CR SG 110×130×13**	

Dimensions d	D	L	d_1	R	Designation	ISO 5597
mm					–	
115	135	16	115,8	0,6	**CR SG 115×135×16**	
120	130	11	120,5	0,3	**CR SG 120×130×11**	
	140	12,5	120,8	0,6	**CR SG 120×140×12.5**	
125	150	14,5	126	0,8	**CR SG 125×150×14.5**	
130	145	9,5	130,7	0,4	**CR SG 130×145× 9.5**	
	145	13	130,7	0,4	**CR SG 130×145×13**	
135	150	9,5	135,7	0,4	**CR SG 135×150×9.5**	
140	150	11	140,5	0,3	**CR SG 140×150×11**	
	160	12,5	140,8	0,6	**CR SG 140×160×12.5**	
150	165	12,5	150,7	0,4	**CR SG 150×165×12.5**	
160	170	11	160,5	0,3	**CR SG 160×170×11.5**	
	180	14,5	160,8	0,6	**CR SG 160×180×14.5**	
170	190	14,5	170,8	0,6	**CR SG 170×190×14.5**	
180	195	12,5	180,7	0,4	**CR SG 180×195×12.5**	
	200	14,5	180,8	0,6	**CR SG 180×200×14.5**	
	210	20,5	181,1	0,8	**CR SG 180×210×20.5**	
190	210	14,5	190,8	0,6	**CR SG 190×210×14.5**	
192	212	14,5	192,8	0,6	**CR SG 192×212×14.5**	
200	220	14,5	200,8	0,6	**CR SG 205×220×12.5**	
205	225	14,5	205,8	0,6	**CR SG 205×225×14.5**	
220	240	14,5	220,8	0,6	**CR SG 220×240×14.5**	
	250	20,5	221,1	0,8	**CR SG 220×250×20.5**	
230	250	14,5	230,8	0,6	**CR SG 230×250×14.5**	
232	252	14,5	232,8	0,6	**CR SG 232×252×14.5**	
235	255	14,5	235,8	0,6	**CR SG 235×255×14.5**	

rgab.ru Берг АБ bergab@ya.ru Тел. (495)-228-06-21, факс (495) 22

rgab.ru Берг АБ bergab@ya.ru Тел. (495)-228-06-21, факс (495) 2

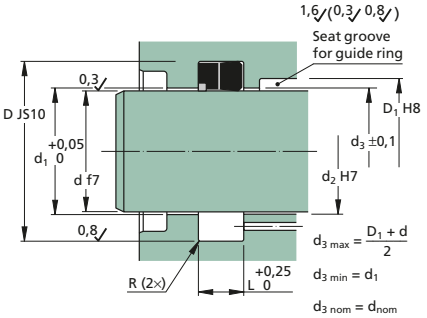

Type SG
Sealing ring of nitrile rubber with reinforcement of fibre reinforced rubber or a fabric reinforced rubber material and back-up ring of acetal resin.
The housing dimensions and tolerances stated are applicable at pressures of up to 28 MPa.
Applications with higher pressures demand special housing dimensions.

Dimensions					Designation	ISO 5597
d	D	L	d_1	R		
mm					–	
250	290	25,5	251,1	1	**CR SG 250×290×25.5**	
260	280	14,5	260,8	0,6	**CR SG 260×280×14.5**	
	290	20,5	261,1	0,8	**CR SG 260×290×20.5**	
280	300	14,5	280,8	0,6	**CR SG 280×300×14.5**	
290	320	20,5	291,1	0,8	**CR SG 290×320×20.5**	
300	320	14,5	300,8	0,6	**CR SG 300×320×14.5**	
320	360	25,5	321,1	1	**CR SG 320×360×25.5**	
350	390	25,5	351,1	1	**CR SG 350×390×25.5**	
375	415	25,5	376,1	1	**CR SG 375×415×25.5**	
400	440	25,5	401,1	1	**CR SG 400×440×25.5**	
450	490	25,5	451,1	1	**CR SG 450×490×25.5**	
500	540	25,5	501,1	1	**CR SG 500×540×25.5**	
550	590	25,5	551,1	1	**CR SG 550×590×25.5**	

rgab.ru Берг АБ bergab@ya.ru Тел. (495)-228-06-21, факс (495) 2

rgab.ru Берг АБ bergab@ya.ru Тел. (495)-228-06-21, факс (495) 2

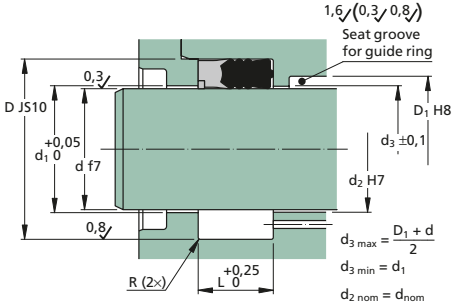

Type AG
Sealing ring of nitrile rubber, support ring of polyester elastomer and back-up ring of acetal resin.
The housing dimensions and tolerances stated are applicable at pressures of up to 40 MPa.
Applications with higher pressures demand special housing dimensions.

3

Dimensions					Designation
d	D	L	d_1	R	
mm				–	
25	38	20	25,6	0,3	**CR AG 25×38×20**
32	47	22,5	32,7	0,4	**CR AG 32×47×22.5**
40	50	17,3	40,7	0,3	**CR AG 40×50×17.3**
	52	22,5	40,7	0,3	**CR AG 40×52×22.5**
	55	22,5	40,7	0,4	**CR AG 40×55×22.5**
	60	30	40,7	0,6	**CR AG 40×60×30**
45	60	22,5	45,8	0,4	**CR AG 45×60×22.5**
50	63	20	50,8	0,3	**CR AG 50×63×20**
	65	22,5	50,8	0,4	**CR AG 50×65×22.5**
	65	24,5	50,8	0,4	**CR AG 50×65×24.5**
	70	30	50,8	0,6	**CR AG 50×70×30**
56	76	28	56,8	0,6	**CR AG 56×76×28**
60	80	30	60,8	0,6	**CR AG 60×80×30**
	80	32	60,8	0,6	**CR AG 60×80×32**
63	83	27	63,8	0,6	**CR AG 63×83×27**
	83	29	63,8	0,6	**CR AG 63×83×29**
	83	30	63,8	0,6	**CR AG 63×83×30**
70	90	30	70,8	0,6	**CR AG 70×90×30**
80	100	30	80,8	0,6	**CR AG 80×100×30**
90	105	25	90,9	0,4	**CR AG 90×105×25**
	110	30	90,9	0,6	**CR AG 90×110×30**
100	114,3	24,2	100,9	0,3	**CR AG 100×114.3×24.2**
	120	30	100,9	0,6	**CR AG 100×120×30**
105	125	30	105,9	0,6	**CR AG 105×125×30**
110	130	30	110,9	0,6	**CR AG 110×130×30**
125	145	30	125,9	0,6	**CR AG 125×145×30**

Dimensions					Designation
d	D	L	d_1	R	
mm				–	
140	160	28	140,9	0,6	**CR AG 140×160×28**
	160	30	140,9	0,6	**CR AG 140×160×30**
150	170	28	150,9	0,6	**CR AG 150×170×28**
160	180	28	160,9	0,6	**CR AG 160×180×28**

rgab.ru Берг АБ bergab@ya.ru Тел. (495)-228-06-21, факс (495) 2

rgab.ru Берг АБ bergab@ya.ru Тел. (495)-228-06-21, факс (495) 2

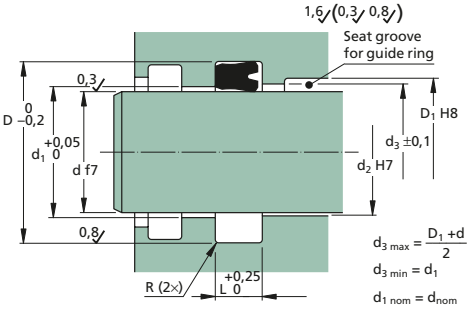

Type SKY
Sealing ring of nitrile rubber (fluorocarbon rubber).
The housing dimensions and tolerances stated are applicable at pressures of up to 14 MPa without back-up ring and up to 21 MPa with back-up ring. Applications with higher pressures demand special housing dimensions
For installations with back-up ring, please see **page 156**.

Dimensions					Designation
d	D	L	d_1	R	
mm					–
10	18	5,7	10,2	0,3	**CR SKY 10×18×5.7**
12	20	5,7	12,2	0,3	**CR SKY 12×20×5.7**
12,5	20	5,7	12,7	0,3	**CR SKY 12.5×20×5.7**
16	24	5,7	16,2	0,3	**CR SKY 16×24×5.7**
17	25	5,7	17,2	0,3	**CR SKY 17×25×5.7**
18	26	5,7	18,2	0,3	**CR SKY 18×26×5.7**
20	28	5,7	20,2	0,3	**CR SKY 20×28×5.7**
22	30	5,7	22,2	0,3	**CR SKY 22×30×5.7**
22,4	30	5,7	22,6	0,3	**CR SKY 22.4×30×5.7**
23,5	31,5	5,7	23,7	0,3	**CR SKY 23.5×31.5×5.7**
24	32	5,7	24,2	0,3	**CR SKY 24×32×5.7**
25	33	5,7	25,2	0,3	**CR SKY 25×33×5.7**
27	35	5,7	27,2	0,3	**CR SKY 27×35×5.7**
28	35,5	5,7	28,2	0,3	**CR SKY 28×35.5×5.7**
	36	5,7	28,2	0,3	**CR SKY 28×36×5.7**
30	40	7	30,2	0,3	**CR SKY 30×40×7**
31,5	41,5	7	31,7	0,3	**CR SKY 31.5×41.5×7**
32	42	7	32,2	0,3	**CR SKY 32×42×7**
35	45	7	35,2	0,3	**CR SKY 35×45×7**
35,5	45	7	35,7	0,3	**CR SKY 35.5×45×7**
	45,5	7	35,7	0,3	**CR SKY 35.5×45.5×7**
36	46	7	36,2	0,3	**CR SKY 36×46×7**

Dimensions					Designation
d	D	L	d_1	R	
mm					–
40	50	7	40,2	0,3	**CR SKY 40×50×7**
45	55	7	45,2	0,3	**CR SKY 45×55×7**
	56	8	45,2	0,3	**CR SKY 45×56×8**
50	60	7	50,2	0,3	**CR SKY 50×60×7**
53	63	7	53,2	0,3	**CR SKY 53×63×7**
55	65	7	55,2	0,3	**CR SKY 55×65×7**
56	66	7	56,2	0,3	**CR SKY 56×66×7**
60	70	7	60,2	0,3	**CR SKY 60×70×7**
	71	8	60,2	0,3	**CR SKY 60×71×8**
63	73	7	63,2	0,3	**CR SKY 63×73×7**
65	75	7	65,2	0,3	**CR SKY 65×75×7**
67	77	7	67,2	0,3	**CR SKY 67×77×7**
70	80	7	70,2	0,3	**CR SKY 70×80×7**
71	80	7	71,2	0,3	**CR SKY 71×80×7**
75	85	7	75,2	0,3	**CR SKY 75×85×7**
80	90	7	80,2	0,3	**CR SKY 80×90×7**
85	100	10	85,2	0,4	**CR SKY 85×100×10**
90	100	7	90,2	0,3	**CR SKY 90×100×7**
	105	10	90,2	0,4	**CR SKY 90×105×10**
95	110	10	95,2	0,4	**CR SKY 95×110×10**
98	112	9,5	98,2	0,3	**CR SKY 98×112×9.5**
100	115	10	100,2	0,4	**CR SKY 100×115×10**
106	120	9,5	106,2	0,3	**CR SKY 106×120×9.5**

rgab.ru Берг АБ bergab@ya.ru Тел. (495)-228-06-21, факс (495) 2

rgab.ru Берг АБ bergab@ya.ru Тел. (495)-228-06-21, факс (495) 2

Dimensions					Designation
d	D	L	d_1	R	
mm					–
110	125	10	110,2	0,4	**CR SKY 110×125×10**
112	125	9,5	112,2	0,3	**CR SKY 112×125×9.5**
	125	10	112,2	0,3	**CR SKY 112×125×10**
118	132	9,5	118,2	0,3	**CR SKY 118×132×9.5**
125	140	10	125,2	0,4	**CR SKY 125×140×10**
132	145	9,5	132,2	0,3	**CR SKY 132×145×9.5**
136	150	9,5	136,2	0,3	**CR SKY 136×150×9.5**
140	155	10	140,2	0,4	**CR SKY 140×155×10**
145	160	10	145,2	0,4	**CR SKY 145×160×10**
150	165	10	150,2	0,4	**CR SKY 150×165×10**
155	170	10	155,2	0,4	**CR SKY 155×170×10**
160	175	10	160,2	0,4	**CR SKY 160×175×10**
165	180	10	165,2	0,4	**CR SKY 165×180×10**
175	190	10	175,2	0,4	**CR SKY 175×190×10**
180	200	13	180,2	0,6	**CR SKY 180×200×13**
200	220	13	200,2	0,6	**CR SKY 200×220×13**
204	224	13	204,2	0,6	**CR SKY 224×224×13**
224	244	13	224,2	0,6	**CR SKY 224×244×13**
230	250	13	230,2	0,6	**CR SKY 230×250×13**
250	270	13	250,2	0,6	**CR SKY 250×270×13**

rgab.ru Берг АБ bergab@ya.ru Тел. (495)-228-06-21, факс (495) 2

rgab.ru Берг АБ bergab@ya.ru Тел. (495)-228-06-21, факс (495) 2

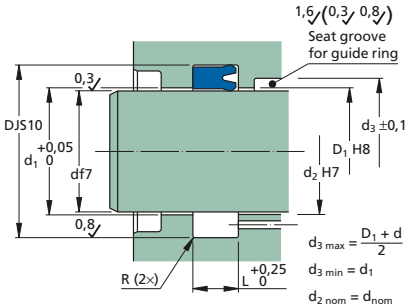

Type UN
Sealing ring of polyurethane.
The housing dimensions and tolerances stated are applicable at pressures up to 25 MPa. Applications with higher pressures demand special housing dimensions.
For installation with back-up rings, please see **page 156**.

Dimensions					Designation
d	D	L	d_1	R	
mm					–
4	10	5	4,2	0,3	**CR UN 4×10×5**
5	12	5,5	5,2	0,3	**CR UN 5×12×5.5**
	12	6,3	5,2	0,3	**CR UN 5×12×6.3**
6	12	6,5	6,2	0,3	**CR UN 6×12×6.5**
8	15	9	8,2	0,3	**CR UN 8×15×9**
	16	6,3	8,2	0,3	**CR UN 8×16×6.3**
10	16	6,5	10,2	0,3	**CR UN 10×16×6.5**
	18	7	10,2	0,3	**CR UN 10×18×7**
	18	9	10,2	0,3	**CR UN 10×18×9**
	20	9	10,2	0,3	**CR UN 10×20×9**
11	20,5	7	11,2	0,3	**CR UN 11×20.5×7**
12	18	5,5	12,2	0,3	**CR UN 12×18×5.5**
	18	7	12,2	0,3	**CR UN 12×18×7**
	20	8	12,2	0,3	**CR UN 12×20×8**
	20	9	12,2	0,3	**CR UN 12×20×9**
	22	8	12,2	0,3	**CR UN 12×22×8**
	22	9	12,2	0,3	**CR UN 12×22×9**
	25	9	12,2	0,3	**CR UN 12×25×9**
14	20	5,3	14,2	0,3	**CR UN 14×20×5.3**
	22	9	14,2	0,3	**CR UN 14×22×9**
	24	9	14,2	0,3	**CR UN 14×24×9**
15	25	9	15,2	0,3	**CR UN 15×25×9**
16	22	4,5	16,2	0,3	**CR UN 16×22×4.5**
	24	6	16,2	0,3	**CR UN 16×24×6**
	26	6	16,2	0,3	**CR UN 16×26×6**
	26	9	16,2	0,3	**CR UN 16×26×9**
	26	11	16,2	0,3	**CR UN 16×26×11**
17	25	11	17,2	0,3	**CR UN 17×25×11**

Dimensions					Designation
d	D	L	d_1	R	
mm					–
18	25	5,5	18,2	0,3	**CR UN 18×25×5.5**
	26	9	18,2	0,3	**CR UN 18×26×9**
	26	9,5	18,2	0,3	**CR UN 18×26×9.5**
	28	9	18,2	0,3	**CR UN 18×28×9**
	30	9	18,2	0,3	**CR UN 18×30×9**
19	25	7	19,2	0,3	**CR UN 19×25×7**
20	28	9	20,2	0,3	**CR UN 20×28×9**
	30	9	20,2	0,3	**CR UN 20×30×9**
	30	11	20,2	0,3	**CR UN 20×30×11**
	39	11	20,2	0,3	**CR UN 20×39×11**
	40	11	20,2	0,6	**CR UN 20×40×11**
	40	13	20,2	0,6	**CR UN 20×40×13**
22	30	7	22,2	0,3	**CR UN 22×30×7**
	30	11	22,2	0,3	**CR UN 22×30×11**
	32	9	22,2	0,3	**CR UN 22×32×9**
	32	11	22,2	0,3	**CR UN 22×32×11**
	35	11	22,2	0,3	**CR UN 22×35×11**
24	32	8	24,2	0,3	**CR UN 24×32×8**
	40	9	24,2	0,3	**CR UN 24×40×9**
25	35	5,5	25,2	0,3	**CR UN 25×35×5.5**
	35	9	25,2	0,3	**CR UN 25×35×9**
	35	11	25,2	0,3	**CR UN 25×35×11**
	38	11	25,2	0,3	**CR UN 25×38×11**
	40	11	25,2	0,4	**CR UN 25×40×11**
28	40	11	28,6	0,3	**CR UN 28×40×11**
30	40	11	30,2	0,3	**CR UN 30×40×11**
	42	11	30,2	0,3	**CR UN 30×42×11**
	45	11	30,2	0,4	**CR UN 30×45×11**
	50	11	30,2	0,6	**CR UN 30×50×11**
	50	13	30,2	0,6	**CR UN 30×50×13**
32	40	9	32,2	0,3	**CR UN 32×40×9**
	42	11	32,2	0,3	**CR UN 32×42×11**
	45	11	32,2	0,3	**CR UN 32×45×11**

rgab.ru Берг АБ bergab@ya.ru Тел. (495)-228-06-21, факс (495) 2

rgab.ru Берг АБ bergab@ya.ru Тел. (495)-228-06-21, факс (495) 2

Dimensions					Designation
d	D	L	d_1	R	
mm					–
35	45	9	35,2	0,3	**CR UN 35×45×9**
	45	11	35,2	0,3	**CR UN 35×45×11**
	48	11	35,2	0,3	**CR UN 35×48×11**
	50	11	35,2	0,4	**CR UN 35×50×11**
	55	11	35,2	0,6	**CR UN 35×55×11**
	55	13	35,2	0,6	**CR UN 35×55×13**
36	46	8	36,2	0,3	**CR UN 36×46×8**
	70	11	36,2	0,3	**CR UN 36×70×11**
38	50	10	38,2	0,3	**CR UN 38×50×10**
	55	11	38,2	0,3	**CR UN 38×55×11**
40	48	12	40,2	0,3	**CR UN 40×48×12**
	50	7,5	40,2	0,3	**CR UN 40×50×7.5**
	50	9	40,2	0,3	**CR UN 40×50×9**
	55	11	40,2	0,4	**CR UN 40×55×11**
	60	11	40,2	0,6	**CR UN 40×60×11**
	60	14	40,2	0,6	**CR UN 40×60×14**
	65	13	40,2	0,8	**CR UN 40×65×13**
	75	11	40,2	0,3	**CR UN 40×75×11**
42	50	9	42,2	0,3	**CR UN 42×50×9**
	52	10	42,2	0,3	**CR UN 42×52×10**
	62	13	42,2	0,6	**CR UN 42×62×13**
45	55	7,5	45,2	0,3	**CR UN 45×55×7.5**
	55	11	45,2	0,3	**CR UN 45×55×11**
	60	11	45,2	0,4	**CR UN 45×60×11**
	63	11	45,2	0,3	**CR UN 45×63×11**
	65	11	45,2	0,6	**CR UN 45×65×11**
	65	13	45,2	0,6	**CR UN 45×65×13**
48	58	11	48,2	0,3	**CR UN 48×58×11**
50	60	11	50,2	0,3	**CR UN 50×60×11**
	62	10	50,2	0,3	**CR UN 50×62×10**
	63	7	50,2	0,3	**CR UN 50×63×7**
	65	11	50,2	0,4	**CR UN 50×65×11**
	70	11	50,2	0,6	**CR UN 50×70×11**
	70	13	50,2	0,6	**CR UN 50×70×13**
	70	19	50,2	0,6	**CR UN 50×70×19**

Dimensions					Designation
d	D	L	d_1	R	
mm					–
52	62	13	52,2	0,3	**CR UN 52×62×13**
53	63	7,5	53,2	0,3	**CR UN 53×63×7.5**
55	65	11	55,2	0,3	**CR UN 55×65×11**
	65	13	55,2	0,3	**CR UN 55×65×13**
	70	13	55,2	0,4	**CR UN 55×70×13**
	75	13	55,2	0,6	**CR UN 55×75×13**
	80	13	55,2	0,8	**CR UN 55×80×13**
60	70	9	60,2	0,3	**CR UN 60×70×9**
	70	11	60,2	0,3	**CR UN 60×70×11**
	70	13	60,2	0,3	**CR UN 60×70×13**
	75	11	60,2	0,4	**CR UN 60×75×11**
	75	13	60,2	0,4	**CR UN 60×75×13**
	80	11	60,2	0,6	**CR UN 60×80×11**
	80	13	60,2	0,6	**CR UN 60×80×13**
	80	19	60,2	0,6	**CR UN 60×80×19**
	85	13,5	60,2	0,8	**CR UN 60×85×13.5**
	90	16	60,2	0,8	**CR UN 60×90×16**
63	75	11	63,2	0,3	**CR UN 63×75×11**
	78	11	63,2	0,4	**CR UN 63×78×11**
65	75	13	65,2	0,3	**CR UN 65×75×13**
	80	12	65,2	0,4	**CR UN 65×80×12**
	80	13	65,2	0,4	**CR UN 65×80×13**
	85	11	65,2	0,6	**CR UN 65×85×11**
	85	13	65,2	0,6	**CR UN 65×85×13**
67	77	13	67,2	0,3	**CR UN 67×77×13**
70	80	6	70,2	0,3	**CR UN 70×80×6**
	80	9	70,2	0,3	**CR UN 70×80×9**
	80	13	70,2	0,3	**CR UN 70×80×13**
	85	13	70,2	0,4	**CR UN 70×85×13**
	90	13	70,2	0,6	**CR UN 70×90×13**
	90	19	70,2	0,6	**CR UN 70×90×19**
	95	13	70,2	0,8	**CR UN 70×95×13**

rgab.ru Берг АБ bergab@ya.ru Тел. (495)-228-06-21, факс (495) 2

rgab.ru Берг АБ bergab@ya.ru Тел. (495)-228-06-21, факс (495) 2

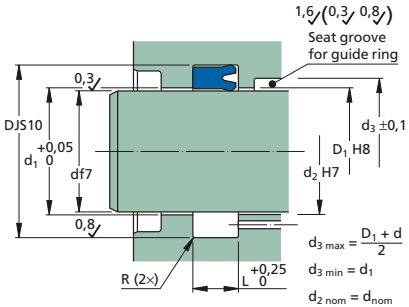

Type UN
Sealing ring of polyurethane.
The housing dimensions and tolerances stated are applicable at pressures up to 25 MPa. Applications with higher pressures demand special housing dimensions.
For installation with back-up rings, please see **page 156**.

Dimensions					Designation
d	D	L	d_1	R	
mm					–
75	85	13	75,2	0,3	**CR UN 75×85×13**
	90	13	75,2	0,4	**CR UN 75×90×13**
	95	13	75,2	0,6	**CR UN 75×95×13**
80	90	11	80,2	0,3	**CR UN 80×90×11**
	90	13	80,2	0,3	**CR UN 80×90×13**
	100	11	80,2	0,6	**CR UN 80×100×11**
	100	13	80,2	0,6	**CR UN 80×100×13**
82	92	11	82,2	0,3	**CR UN 82×92×11**
82,5	101,6	9,5	82,7	0,3	**CR UN 82.5×101.6×9.5**
85	95	9,5	85,2	0,3	**CR UN 85×95×9.5**
	95	13	85,2	0,3	**CR UN 85×95×13**
	100	13	85,2	0,4	**CR UN 85×100×13**
90	100	9	90,2	0,3	**CR UN 90×100×9**
	100	13	90,2	0,3	**CR UN 90×100×13**
	105	13	90,2	0,4	**CR UN 90×105×13**
	110	13	90,2	0,6	**CR UN 90×110×13**
95	110	13	95,2	0,4	**CR UN 95×110×13**
	115	13	95,2	0,6	**CR UN 95×115×13**
100	115	13	100,2	0,4	**CR UN 100×115×13**
	120	13	100,2	0,6	**CR UN 100×120×13**
	125	13	100,2	0,8	**CR UN 100×125×13**
	125	16	100,2	0,8	**CR UN 100×125×16**
	130	13	100,2	0,8	**CR UN 100×130×13**
105	120	9	105,2	0,4	**CR UN 105×120×9**
	120	16	105,2	0,4	**CR UN 105×120×16**
	125	16	105,2	0,6	**CR UN 105×125×16**
110	125	13	110,2	0,4	**CR UN 110×125×13**
	125	16	110,2	0,4	**CR UN 110×125×16**
	130	16	110,2	0,6	**CR UN 110×130×16**
	130	19	110,2	0,6	**CR UN 110×130×19**
115	135	16	115,2	0,6	**CR UN 115×135×16**

Dimensions					Designation
d	D	L	d_1	R	
mm					–
120	135	16	120,2	0,4	**CR UN 120×135×16**
	140	16	120,2	0,6	**CR UN 120×140×16**
125	140	12	125,2	0,4	**CR UN 125×140×12**
	140	16	125,2	0,4	**CR UN 125×140×16**
	145	16	125,2	0,6	**CR UN 125×145×16**
130	150	16	130,2	0,6	**CR UN 130×150×16**
135	150	16	135,2	0,4	**CR UN 135×150×16**
	155	16	135,2	0,6	**CR UN 135×155×16**
140	160	16	140,2	0,6	**CR UN 140×160×16**
145	165	16	145,2	0,6	**CR UN 145×165×16**
150	170	16	150,2	0,6	**CR UN 150×170×16**
	170	19	150,2	0,6	**CR UN 150×170×19**
160	180	16	160,2	0,6	**CR UN 160×180×16**
170	190	16	170,2	0,6	**CR UN 170×190×16**
	200	19	170,2	0,8	**CR UN 170×200×19**
180	200	16	180,2	0,6	**CR UN 180×200×16**
200	220	16	200,2	0,6	**CR UN 200×220×16**
210	240	19	210,2	0,8	**CR UN 210×240×19**
220	250	19	220,2	0,8	**CR UN 220×250×19**
270	300	16	270,2	0,8	**CR UN 270×300×16**
280	300	16	280,2	0,6	**CR UN 280×300×16**
320	350	17	320,2	0,8	**CR UN 320×350×17**
360	390	23	360,2	0,8	**CR UN 360×390×23**

rgab.ru Берг АБ bergab@ya.ru Тел. (495)-228-06-21, факс (495) 2

rgab.ru Берг АБ bergab@ya.ru Тел. (495)-228-06-21, факс (495) 22

rgab.ru Берг АБ bergab@ya.ru Тел. (495)-228-06-21, факс (495) 22

rgab.ru Берг АБ bergab@ya.ru Тел. (495)-228-06-21, факс (495) 22

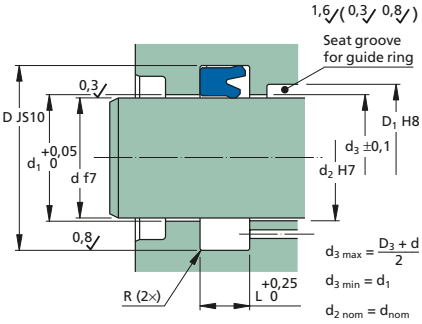

Type SI
Sealing ring of polyurethane.
The housing dimensions and tolerances stated are applicable at pressures of up to 40 MPa. Applications with higher pressures demand special housing dimensions.
For installation with back-up rings, please see **page 156**.

Dimensions d	D	L	d_1	R	Designation	ISO 5597
mm					–	
6	14	6,3	6,2	0,3	**CR SI 6×14×6.3**	•
8	16	6,3	8,2	0,3	**CR SI 8×16×6.3**	•
10	18	6,3	10,2	0,3	**CR SI 10×18×6.3**	•
	20	9	10,2	0,3	**CR SI 10×20×9**	
12	20	6,3	12,2	0,3	**CR SI 12×20×6.3**	•
	22	9	12,2	0,3	**CR SI 12×22×9**	
14	24	8	14,2	0,3	**CR SI 14×24×8**	•
	24	9	14,2	0,3	**CR SI 14×24×9**	
15	23	6,3	15,2	0,3	**CR SI 15×23×6.3**	
16	20,6	6,3	16,2	0,3	**CR SI 16×20.6×6.3**	
	22	6	16,2	0,3	**CR SI 16×22×6**	
	24	6,3	16,2	0,3	**CR SI 16×24×6.3**	•
	24	7	16,2	0,3	**CR SI 16×24×7**	
	26	8	16,2	0,3	**CR SI 16×26×8**	•
	26	9	16,2	0,3	**CR SI 16×26×9**	
	26	10	16,2	0,3	**CR SI 16×26×10**	
18	24	5,2	18,2	0,3	**CR SI 18×24×5.2**	
	26	6,3	18,2	0,3	**CR SI 18×26×6.3**	•
	26	9	18,2	0,3	**CR SI 18×26×9**	
	28	8	18,2	0,3	**CR SI 18×28×8**	•
20	26	5,5	20,2	0,3	**CR SI 20×26×5.5**	
	28	5,5	20,2	0,3	**CR SI 20×28×5.5**	
	28	6,3	20,2	0,3	**CR SI 20×28×6.3**	•
	30	8	20,2	0,3	**CR SI 20×30×8**	•
	30	9	20,2	0,3	**CR SI 20×30×9**	
	30	11	20,2	0,3	**CR SI 20×30×11**	
22	30	6,3	22,2	0,3	**CR SI 22×30×6.3**	•
	32	8	22,2	0,3	**CR SI 22×32×8**	•
24	34	8	24,2	0,3	**CR SI 24×34×8**	

Dimensions d	D	L	d_1	R	Designation	ISO 5597
mm					–	
25	33	6,3	25,2	0,3	**CR SI 25×33×6.3**	•
	33	7	25,2	0,3	**CR SI 25×33×7**	
	33	11	25,2	0,3	**CR SI 25×33×11**	
	35	8	25,2	0,3	**CR SI 25×35×8**	•
	35	9	25,2	0,3	**CR SI 25×35×9**	
	35	11	25,2	0,3	**CR SI 25×35×11**	
	38	10	25,2	0,3	**CR SI 25×38×10**	
28	38	8	28,2	0,3	**CR SI 28×38×8**	•
	38	9	28,2	0,3	**CR SI 28×38×9**	
	38	11	28,2	0,3	**CR SI 28×38×11**	
	40	9,5	28,2	0,3	**CR SI 28×40×9.5**	
30	40	8	30,2	0,3	**CR SI 30×40×8**	
	40	11	30,2	0,3	**CR SI 30×40×11**	
	43	10	30,2	0,3	**CR SI 30×43×10**	
	45	9	30,2	0,4	**CR SI 30×45×9**	
	45	11	30,2	0,4	**CR SI 30×45×11**	
32	40	6,3	32,2	0,3	**CR SI 32×40×6.3**	
	40	9	32,2	0,3	**CR SI 32×40×9**	
	42	8	32,2	0,3	**CR SI 32×42×8**	•
	42	11	32,2	0,3	**CR SI 32×42×11**	
	45	10,5	32,2	0,3	**CR SI 32×45×10.5**	
35	43	6,3	35,2	0,3	**CR SI 35×43×6.3**	
	43	9	35,2	0,3	**CR SI 35×43×9**	
	45	8	35,2	0,3	**CR SI 35×45×8**	
	45	11	35,2	0,3	**CR SI 35×45×11**	
	50	11	35,2	0,4	**CR SI 35×50×11**	
	55	13	35,2	0,6	**CR SI 35×55×13**	
36	46	8	36,2	0,3	**CR SI 36×46×8**	•
	46	11	36,2	0,3	**CR SI 36×46×11**	
	51	11	36,2	0,4	**CR SI 36×51×11**	
38	45	5,5	36,2	0,3	**CR SI 38×45×5.5**	

rgab.ru Берг АБ bergab@ya.ru Тел. (495)-228-06-21, факс (495) 22

rgab.ru Берг АБ bergab@ya.ru Тел. (495)-228-06-21, факс (495) 22

Dimensions					Designation	ISO 5597
d	D	L	d_1	R		
mm					–	
40	48	6,3	40,2	0,3	**CR SI 40×48×6.3**	
	50	8	40,2	0,3	**CR SI 40×50×8**	•
	50	11	40,2	0,3	**CR SI 40×50×11**	
	52	9	40,2	0,3	**CR SI 40×52×9**	
	55	11	40,2	0,4	**CR SI 40×55×11**	
	55	12,5	40,2	0,4	**CR SI 40×55×12.5**	•
	60	13	40,2	0,6	**CR SI 40×60×13**	
42	62	13	42,2	0,6	**CR SI 42×62×13**	
45	53	6,3	45,2	0,3	**CR SI 45×53×6.3**	
	53	11	45,2	0,3	**CR SI 45×53×11**	
	53	13	45,2	0,3	**CR SI 45×53×13**	
	55	8	45,2	0,3	**CR SI 45×55×8**	•
	55	11	45,2	0,3	**CR SI 45×55×11**	
	60	11	45,2	0,4	**CR SI 45×60×11**	
	60	12,5	45,2	0,4	**CR SI 45×60×12.5**	•
	65	11	45,2	0,6	**CR SI 45×65×11**	
	65	14,5	45,2	0,6	**CR SI 45×65×14.5**	
46	56	8	46,2	0,3	**CR SI 46×56×8**	
50	60	8	50,2	0,3	**CR SI 50×60×8**	•
	60	11	50,2	0,3	**CR SI 50×60×11**	
	60	13	50,2	0,3	**CR SI 50×60×13**	
	62	9	50,2	0,3	**CR SI 50×62×9**	
	65	11	50,2	0,4	**CR SI 50×65×11**	
	65	12,5	50,2	0,4	**CR SI 50×65×12.5**	•
	70	11	50,2	0,6	**CR SI 50×70×11**	
	70	13	50,2	0,6	**CR SI 50×70×13**	
	70	14,5	50,2	0,6	**CR SI 50×70×14.5**	
55	63	13	50,2	0,3	**CR SI 55×63×13**	
	65	11	50,2	0,3	**CR SI 55×65×11**	
	65	13	55,2	0,3	**CR SI 55×65×13**	
	67	11	55,2	0,3	**CR SI 55×67×11**	
	70	11	55,2	0,4	**CR SI 55×70×11**	
	70	13	55,2	0,4	**CR SI 55×70×13**	

Dimensions					Designation	ISO 5597
d	D	L	d_1	R		
mm					–	
56	66	11	56,2	0,3	**CR SI 56×66×11**	
	71	11	56,2	0,4	**CR SI 56×71×11**	
	71	12,5	56,2	0,4	**CR SI 56×71×12.5**	•
	76	13	56,2	0,6	**CR SI 56×76×13**	
	76	14,5	56,2	0,6	**CR SI 56×76×14.5**	
60	70	11	60,2	0,3	**CR SI 60×70×11**	
	70	13	60,2	0,3	**CR SI 60×70×13**	
	72	10	60,2	0,3	**CR SI 60×72×10**	
	75	11	60,2	0,4	**CR SI 60×75×11**	
	75	13	60,2	0,4	**CR SI 60×75×13**	
	80	13	60,2	0,6	**CR SI 60×80×13**	
62	74	14	62,2	0,3	**CR SI 62×74×14**	
63	73	11	63,2	0,3	**CR SI 63×73×11**	
	73	13	63,2	0,3	**CR SI 63×73×13**	
	78	11	63,2	0,4	**CR SI 63×78×11**	
	78	12,5	63,2	0,4	**CR SI 63×78×12.5**	•
	78	13	63,2	0,4	**CR SI 63×78×13**	
	83	13	63,2	0,6	**CR SI 63×83×13**	
	83	14,5	63,2	0,6	**CR SI 63×83×14.5**	
	83	16	63,2	0,6	**CR SI 63×83×16**	•
65	75	11	65,2	0,3	**CR SI 65×75×11**	
	75	13	65,2	0,3	**CR SI 65×75×13**	
	75	14,5	65,2	0,3	**CR SI 65×75×14.5**	
	77	10	65,2	0,3	**CR SI 65×77×10**	
	80	11	65,2	0,4	**CR SI 65×80×11**	
	80	13	65,2	0,4	**CR SI 65×80×13**	
	85	13	65,2	0,6	**CR SI 65×85×13**	
70	80	6,5	70,2	0,3	**CR SI 70×80×6.5**	
	80	11	70,2	0,3	**CR SI 70×80×11**	
	80	13	70,2	0,3	**CR SI 70×80×13**	
	85	11	70,2	0,4	**CR SI 70×85×11**	
	85	12,5	70,2	0,4	**CR SI 70×85×12.5**	•
	85	13	70,2	0,4	**CR SI 70×85×13**	
	90	13	70,2	0,6	**CR SI 70×90×13**	

rgab.ru Берг АБ bergab@ya.ru Тел. (495)-228-06-21, факс (495) 22

rgab.ru Берг АБ bergab@ya.ru Тел. (495)-228-06-21, факс (495) 2

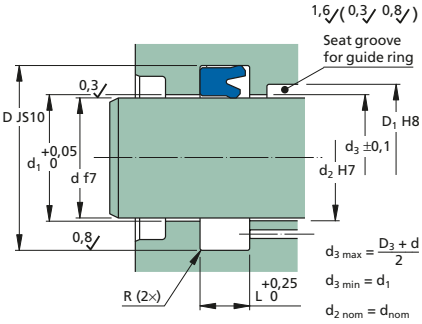

Type SI
Sealing ring of polyurethane.
The housing dimensions and tolerances stated are applicable at pressures of up to 40 MPa. Applications with higher pressures demand special housing dimensions.
For installation with back-up rings, please see **page 156**.

Dimensions d	D	L	d_1	R	Designation	ISO 5597
mm					–	
75	85	8	75,2	0,3	**CR SI 75×85×8**	
	85	13	75,2	0,3	**CR SI 75×85×13**	
	90	11	75,2	0,4	**CR SI 75×90×11**	
	90	13	75,2	0,4	**CR SI 75×90×13**	
80	90	13	80,2	0,3	**CR SI 80×90×13**	
	90	15	80,2	0,3	**CR SI 80×90×15**	
	95	11	80,2	0,4	**CR SI 80×95×11**	
	95	12,5	80,2	0,4	**CR SI 80×95×12.5**	•
	95	13	80,2	0,4	**CR SI 80×95×13**	
	100	13	80,2	0,6	**CR SI 80×100×13**	
	100	14,5	80,2	0,6	**CR SI 80×100×14.5**	
	100	16	80,2	0,6	**CR SI 80×100×16**	•
85	100	13	85,2	0,4	**CR SI 85×100×13**	
90	105	12,5	90,2	0,4	**CR SI 90×105×12.5**	•
	105	13	90,2	0,4	**CR SI 90×105×13**	
	110	13	90,2	0,6	**CR SI 90×110×13**	
	110	16	90,2	0,6	**CR SI 90×110×16**	•
95	105	11	95,2	0,3	**CR SI 95×105×11**	
	115	13	95,2	0,6	**CR SI 95×115×13**	
100	110	15	100,2	0,3	**CR SI 100×110×15**	
	115	11,5	100,2	0,4	**CR SI 100×115×11.5**	
	115	13	100,2	0,4	**CR SI 100×115×13**	
	120	13	100,2	0,6	**CR SI 100×120×13**	
	120	16	100,2	0,6	**CR SI 100×120×16**	•
105	115	11	105,2	0,3	**CR SI 105×115×11**	
	115	14,5	105,2	0,3	**CR SI 105×115×14.5**	
110	125	12	110,2	0,4	**CR SI 110×125×12**	
	125	16	110,2	0,4	**CR SI 110×125×16**	
	130	13	110,2	0,6	**CR SI 110×130×13**	
	130	16	110,2	0,6	**CR SI 110×130×16**	•
120	135	16	120,2	0,4	**CR SI 120×135×16**	
	140	13	120,2	0,6	**CR SI 120×140×13**	

Dimensions d	D	L	d_1	R	Designation	ISO 5597
mm					–	
125	145	13	125,2	0,6	**CR SI 125×145×13**	
	145	16	125,2	0,6	**CR SI 125×145×16**	•
	150	13	125,2	0,8	**CR SI 125×150×13**	
	150	15	125,2	0,8	**CR SI 125×150×15**	
130	140	8	130,2	0,3	**CR SI 130×140×8**	
	145	16	130,2	0,4	**CR SI 130×145×16**	
	150	13	130,2	0,6	**CR SI 130×150×13**	
	150	16	130,2	0,6	**CR SI 130×150×16**	
140	155	13	140,2	0,4	**CR SI 140×155×13**	
	160	13	140,2	0,6	**CR SI 140×160×13**	
	160	16	140,2	0,6	**CR SI 140×160×16**	•
150	170	13	150,2	0,6	**CR SI 150×170×13**	
	170	16	150,2	0,6	**CR SI 150×170×16**	
160	180	13	160,2	0,6	**CR SI 160×180×13**	
	180	16	160,2	0,6	**CR SI 160×180×16**	
	185	20	160,2	0,8	**CR SI 160×185×20**	•
165	195	21	165,2	0,8	**CR SI 165×195×21**	
170	190	13	170,2	0,6	**CR SI 170×190×13**	
	190	16	170,2	0,6	**CR SI 170×190×16**	
180	200	13	180,2	0,6	**CR SI 180×200×13**	
	200	16	180,2	0,6	**CR SI 180×200×16**	
190	210	13	190,2	0,6	**CR SI 190×210×13**	
	210	16	190,2	0,6	**CR SI 190×210×16**	
200	212	16	200,2	0,3	**CR SI 200×212×16**	
	220	13	200,2	0,6	**CR SI 200×220×13**	
	220	16	200,2	0,6	**CR SI 200×220×16**	
210	230	16	210,2	0,6	**CR SI 210×230×16**	
	235	26	210,2	0,8	**CR SI 210×235×26**	
220	240	13	220,2	0,6	**CR SI 220×240×13**	
	240	16	220,2	0,6	**CR SI 220×240×16**	
	250	19	220,2	0,8	**CR SI 220×250×19**	

rgab.ru Берг АБ bergab@ya.ru Тел. (495)-228-06-21, факс (495) 2

rgab.ru Берг АБ bergab@ya.ru Тел. (495)-228-06-21, факс (495) 2

Dimensions					Designation	ISO 5597
d	D	L	d_1	R		
mm					–	
230	250	13	230,2	0,6	**CR SI 230×250×13**	
240	260	16	240,2	0,6	**CR SI 240×260×16**	
	270	19	240,2	0,8	**CR SI 240×270×19**	
250	270	13	250,2	0,6	**CR SI 250×270×13**	
	270	16	250,2	0,6	**CR SI 250×270×16**	
	280	23	250,2	0,8	**CR SI 250×280×23**	
260	280	16	260,2	0,6	**CR SI 260×280×16**	
280	305	16	280,2	0,8	**CR SI 280×305×16**	
	310	25	280,2	0,8	**CR SI 280×310×25**	•
315	340	13,5	315,2	0,8	**CR SI 315×340×13.5**	
340	370	21	340,2	0,8	**CR SI 340×370×21**	
560	600	28	560,2	1	**CR SI 560×600×28**	

rgab.ru Берг АБ bergab@ya.ru Тел. (495)-228-06-21, факс (495) 2

rgab.ru Берг АБ bergab@ya.ru Тел. (495)-228-06-21, факс (495) 2

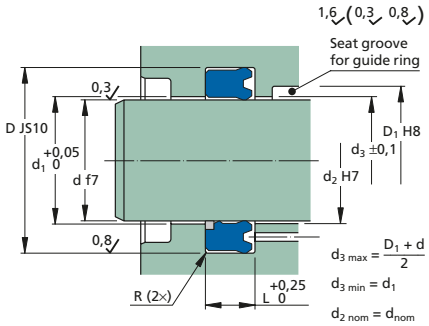

Type TI
Sealing ring of polyurethane.
For installation with back-up rings, please see **page 156**.

Type TILA
Sealing ring of polyurethane with a secondary sealing edge and back-up ring of acetal resin.
The housing dimensions and tolerances stated are applicable at pressures of up to 40 MPa.
Applications with higher pressures demand special housing dimensions.

Dimensions					Designation	ISO 5597
d	D	L	d_1	R		
mm					–	
12	20	6,3	12,2	0,3	**CR TI 12×20×6.3**	•
16	22	4,5	16,2	0,3	**CR TI 16×22×4.5**	
	24	7	16,2	0,3	**CR TI 16×24×7**	
18	25	5,7	18,2	0,3	**CR TI 18×25×5.7**	
20	25	3,5	20,2	0,3	**CR TI 20×25×3.5**	
	26	6	20,2	0,3	**CR TI 20×26×6**	
	27	6,5	20,2	0,3	**CR TI 20×27×6.5**	
	28	6,3	20,2	0,3	**CR TI 20×28×6.3**	•
	28	8	20,2	0,3	**CR TI 20×28×8**	
	30	8	20,2	0,3	**CR TI 20×30×8**	•
	30	9	20,2	0,3	**CR TI 20×30×9**	
	30	11	20,2	0,3	**CR TI 20×30×11**	
22	30	7	22,2	0,3	**CR TI 22×30×7**	
	30	8	22,2	0,3	**CR TI 22×30×8**	
25	32	5	25,2	0,3	**CR TI 25×32×5**	
	33	6,3	25,2	0,3	**CR TI 25×33×6.3**	•
	33	9	25,2	0,3	**CR TI 25×33×9**	
	35	6	25,2	0,3	**CR TI 25×35×6**	
	35	9	25,2	0,3	**CR TI 25×35×9**	
	35	10	25,2	0,3	**CR TI 25×35×10**	
	35	11	25,2	0,3	**CR TI 25×35×11**	
	36	6	25,2	0,3	**CR TI 25×36×6**	
	38	11	25,2	0,3	**CR TI 25×38×11**	
28	36	6,3	28,2	0,3	**CR TI 28×36×6.3**	
	38	8	28,2	0,3	**CR TI 28×38×8**	•
30	38	6,3	30,2	0,3	**CR TI 30×38×6.3**	
	38	9	30,2	0,3	**CR TI 30×38×9**	
	40	8	30,2	0,3	**CR TI 30×40×8**	
	40	11	30,2	0,3	**CR TI 30×40×11**	

Dimensions					Designation	ISO 5597
d	D	L	d_1	R		
mm					–	
32	40	6,3	32,2	0,3	**CR TI 32×40×6.3**	
	40	9	32,2	0,3	**CR TI 32×40×9**	
	42	8	32,2	0,3	**CR TI 32×42×8**	•
	42	9	32,2	0,3	**CR TI 32×42×9**	
	42	11	32,2	0,3	**CR TI 32×42×11**	
	45	10,5	32,5	0,3	**CR TILA 32×45×10.5**	
35	43	7	35,2	0,3	**CR TI 35×43×7**	
	43	9	35,2	0,3	**CR TI 35×43×9**	
	45	8	35,2	0,3	**CR TI 35×45×8**	
	45	11	35,2	0,3	**CR TI 35×45×11**	
36	46	8	36,2	0,3	**CR TI 36×46×8**	•
	46	8	36,5	0,3	**CR TILA 36×46×8**	•
	46	11	36,2	0,3	**CR TI 36×46×11**	
40	48	6,3	40,2	0,3	**CR TI 40×48×6.3**	
	48	9	40,2	0,3	**CR TI 40×48×9**	
	48	9	40,5	0,3	**CR TILA 40×48×9**	
	50	7	40,2	0,3	**CR TI 40×50×7**	
	50	8	40,2	0,3	**CR TI 40×50×8**	•
	50	11	40,2	0,3	**CR TI 40×50×11**	
	50	11	40,5	0,3	**CR TILA 40×50×11**	
	55	11	40,7	0,4	**CR TILA 40×55×11**	
45	53	9	45,2	0,3	**CR TI 45×53×9**	
	55	8	45,2	0,3	**CR TI 45×55×8**	•
	55	11	45,2	0,3	**CR TI 45×55×11**	
	60	11	45,2	0,4	**CR TILA 45×60×11**	
50	58	9	50,2	0,3	**CR TI 50×58×9**	
	60	8	50,2	0,3	**CR TI 50×60×8**	•
	60	11	50,2	0,3	**CR TI 50×60×11**	
	62	11	50,2	0,3	**CR TI 50×62×11**	
	65	11	50,2	0,4	**CR TI 50×65×11**	
	65	11	50,7	0,4	**CR TILA 50×65×11**	
	70	13	50,2	0,6	**CR TILA 50×70×13**	
55	63	9	55,2	0,3	**CR TI 55×63×9**	
	65	8	55,2	0,3	**CR TI 55×65×8**	
	65	11	55,2	0,3	**CR TI 55×65×11**	

rgab.ru Берг АБ bergab@ya.ru Тел. (495)-228-06-21, факс (495) 2

rgab.ru Берг АБ bergab@ya.ru Тел. (495)-228-06-21, факс (495) 2

Dimensions d	D	L	d_1	R	Designation	ISO 5597
mm					–	
56	66	11	56,2	0,3	**CR TI 56×66×11**	
	71	12,5	56,7	0,4	**CR TILA 56×71×12.5**	•
60	68	9	60,2	0,3	**CR TI 60×68×9**	
	70	8	60,2	0,3	**CR TI 60×70×8**	
	70	13	60,2	0,3	**CR TI 60×70×13**	
	70	13,5	60,5	0,3	**CR TILA 60×70×13.5**	
	75	13	60,7	0,4	**CR TILA 60×75×13**	
	80	13	60,8	0,6	**CR TILA 60×80×13**	
63	71	9	63,2	0,3	**CR TI 63×71×9**	
	75	13	63,6	0,3	**CR TILA 63×75×13**	
	78	12,5	63,7	0,4	**CR TILA 63×78×12.5**	•
	78	13,5	63,7	0,4	**CR TILA 63×78×13.5**	
	83	13	63,8	0,6	**CR TILA 63×83×13**	
	83	14,5	63,8	0,6	**CR TILA 63×83×14.5**	
65	75	13	65,2	0,3	**CR TI 65×75×13**	
	80	12,5	65,7	0,4	**CR TILA 65×80×12.5**	
70	80	13	70,2	0,3	**CR TI 70×80×13**	
	85	13	70,7	0,4	**CR TILA 70×85×13**	
	90	13	70,8	0,6	**CR TILA 70×90×13**	
75	85	8	75,2	0,3	**CR TI 75×85×8**	
	90	13	75,7	0,4	**CR TILA 75×90×13**	
80	90	13	80,2	0,3	**CR TI 80×90×13**	
	95	12,5	80,7	0,4	**CR TILA 80×95×12.5**	•
	100	12,5	80,8	0,6	**CR TILA 80×100×12.5**	
	100	14,5	80,8	0,6	**CR TILA 80×100×14.5**	
85	105	13	85,8	0,6	**CR TILA 85×105×13**	
90	105	9,5	90,2	0,4	**CR TILA 90×105×9.5**	•
	105	13	90,7	0,4	**CR TILA 90×105×13**	
	110	13	90,8	0,6	**CR TILA 90×110×13**	
100	110	13,5	100,5	0,3	**CR TILA 100×110×13.5**	
	120	14,5	100,8	0,6	**CR TILA 100×120×14.5**	

Dimensions d	D	L	d_1	R	Designation	ISO 5597
mm					–	
110	120	14,5	110,2	0,3	**CR TILA 110×120×14.5**	
	130	13	110,8	0,6	**CR TILA 110×130×13**	
115	130	17	115,8	0,4	**CR TILA 115×130×17**	
127	140	13,5	127,6	0,3	**CR TILA 127×140×13.5**	

rgab.ru Берг АБ bergab@ya.ru Тел. (495)-228-06-21, факс (495) 2

rgab.ru Берг АБ bergab@ya.ru Тел. (495)-228-06-21, факс (495) 2

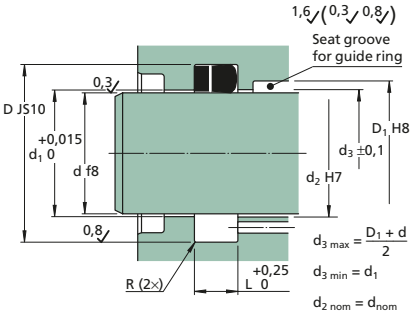

Type S
Sealing ring of nitrile rubber with reinforcement of fabric reinforced nitrile rubber.
The housing dimensions and tolerances stated are applicable at pressures of up to 16 MPa. Applications with higher pressures demand special housing dimensions.

Dimensions					Designation
d	D	L	d_1	R	
mm					–
12	18	7	12,2	0,3	**CR S 12×18×7**
	19	6,4	12,2	0,3	**CR S 12×19×6.4**
14	22	6,4	14,2	0,3	**CR S 14×22×6.4**
16	24	6,4	16,2	0,3	**CR S 16×24×6.4**
18	26	6,4	18,2	0,3	**CR S 18×26×6.4**
20	28	6,4	20,2	0,3	**CR S 20×28×6.4**
22	30	6,4	22,2	0,3	**CR S 22×30×6.4**
24	32	7	24,2	0,3	**CR S 24×32×7**
25	33	6,4	25,2	0,3	**CR S 25×33×6.4**
28	36	6,4	28,2	0,3	**CR S 28×36×6.4**
30	38	6,4	30,2	0,3	**CR S 30×38×6.4**
32	40	6,4	32,2	0,3	**CR S 32×40×6.4**
35	43	6,4	35,2	0,3	**CR S 35×43×6.4**
36	44	6,4	36,2	0,3	**CR S 36×44×6.4**
40	48	6,4	40,2	0,3	**CR S 40×48×6.4**
42	50	6,4	42,2	0,3	**CR S 42×50×6.4**
45	55	8	45,2	0,3	**CR S 45×55×8**
50	60	8	50,2	0,3	**CR S 50×60×8**
55	65	8	55,2	0,3	**CR S 55×65×8**
	75	14	55,2	0,6	**CR S 55×75×14**
56	66	8	56,2	0,3	**CR S 56×66×8**
60	70	8	60,2	0,3	**CR S 60×70×8**

Dimensions					Designation
d	D	L	d_1	R	
mm					–
63	75	9,6	63,2	0,3	**CR S 63×75×9.6**
65	77	9,6	65,2	0,3	**CR S 65×77×9.6**
70	80	7,5	70,2	0,3	**CR S 70×80×7.5**
	82	9,6	70,2	0,3	**CR S 70×82×9.6**
75	87	9,6	75,2	0,3	**CR S 75×87×9.6**
80	92	9,6	80,2	0,3	**CR S 80×92×9.6**
	96	11	80,2	0,3	**CR S 80×96×11**
	100	14,5	80,2	0,6	**CR S 80×100×14.5**
85	97	9,6	85,2	0,3	**CR S 85×97×9.6**
	105	14,5	85,2	0,6	**CR S 85×105×14.5**
90	102	9,6	90,2	0,3	**CR S 90×102×9.6**
95	107	12,5	95,2	0,3	**CR S 95×107×12.5**
100	115	12	100,2	0,4	**CR S 100×115×12**
110	125	12	110,2	0,4	**CR S 110×125×12**
	130	12,5	110,2	0,6	**CR S 110×130×12.5**
	130	13	110,2	0,6	**CR S 110×130×13**
112	127	9,5	112,2	0,4	**CR S 112×127×9.5**
120	140	14,5	120,2	0,6	**CR S 120×140×14.5**
150	170	16	150,2	0,6	**CR S 150×170×16**
160	180	16	160,2	0,6	**CR S 160×180×16**
180	200	16	180,2	0,6	**CR S 180×200×16**
200	220	16	200,2	0,6	**CR S 200×220×16**
210	230	14,5	210,2	0,6	**CR S 210×230×14.5**
240	260	14,5	240,2	0,6	**CR S 240×260×14.5**

rgab.ru Берг АБ bergab@ya.ru Тел. (495)-228-06-21, факс (495) 2

rgab.ru Берг АБ bergab@ya.ru Тел. (495)-228-06-21, факс (495) 2

Dimensions					Designation
d	D	L	d_1	R	
mm					–
245	265	14,5	245,2	0,6	**CR S 245×265×14.5**
270	290	14,5	270,2	0,6	**CR S 270×290×14.5**
	290	16	270,2	0,6	**CR S 270×290×16**
	300	24	270,2	0,8	**CR S 270×300×24**
280	310	18,5	280,2	0,8	**CR S 280×310×18.5**
290	320	15	290,2	0,8	**CR S 290×320×15**
300	330	18,5	300,2	0,8	**CR S 300×330×18.5**
320	340	14,5	320,2	0,6	**CR S 320×340×14.5**
380	410	20,5	380,2	0,8	**CR S 380×410×20.5**

rgab.ru Берг АБ bergab@ya.ru Тел. (495)-228-06-21, факс (495) 2

rgab.ru Берг АБ bergab@ya.ru Тел. (495)-228-06-21, факс (495) 2

Rod seals series GL

Sealpool slide ring seals are designated according to a system which clearly states the seal series, type, dynamic sealing diameter (bore), nominal housing groove diameter, housing groove width and material, see **Table 1**.

Seal series/type

The types of series GL consist of a dynamically sealing slide ring of PTFE and a static, elastomeric part which also functions as an interference element, see **fig 1**. They are designed for applications demanding low friction, small housing dimensions and a long service life. Type GL is appropriate for low pressure hydraulics and can also be used as a pneumatic seal. The basic design GL is manufactured of unfilled PTFE (MS-100) and has an O-ring of nitrile rubber 70° IRH. The groove of type GLG provides two sealing edges which results in higher sealing ability. This design can in some cases cause a slightly higher friction.

Type GLC has chamfered edges on the dynamic side. The chamfers stengthen the edges and reduce the risk of extrusion.

Housing groove sections etc.

The dimensions for the housing groove section, etc can be found in **Table 2** as well as in the product tables.

Seal materials

The choice of seal materials always includes a compromise between advantages and disadvantages. Slide ring seals can be delivered with slide rings of several different PTFE materials. The materials which we most often suggest are stated on in **Table 3**.

There is a large number of different PTFE materials with variants of fillers, e.g. glass fibre, carbon, graphite, molybdenum disulphide, metal oxides, polymeric fillers and combinations of different fillers. Each possesses different properties appropriate for different applications and service conditions.

Unfilled PTFE provides most often a lower friction than a filled PTFE material and the lowest degree of wear of the cylinder tube surface. However, its own resistance to wear and deformation under load is limited.

Table 1

Designation codes for rod seals series GL

CR GL 60×70×4 – AA 1

- Seal series/type
- Rod diameter
- Housing groove diameter
- Housing groove width
- Material code (slide ring)
- Material and design code (rubber part)

Common for all filled PTFE materials is their different degree of better resistance to wear and deformation.

Slide rings of polyurethane normally provide higher friction but also a higher sealing ability than those of a PTFE material, see **Table 3** and **4**.

Fig 1

Designs series GL

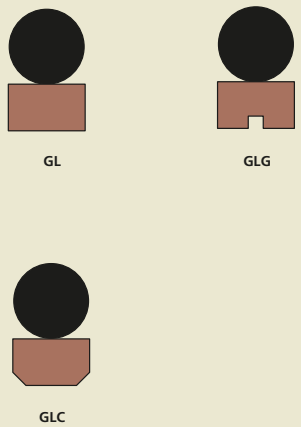

rgab.ru Берг АБ bergab@ya.ru Тел. (495)-228-06-21, факс (495) 2

rgab.ru Берг АБ bergab@ya.ru Тел. (495)-228-06-21, факс (495) 2

Table **2**

Housing groove sections

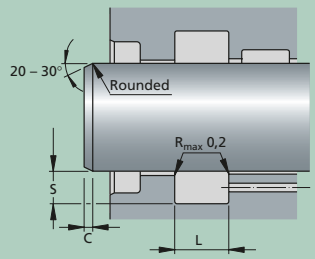

Groove width L	Radial section S	Axial length C
mm		
2	2	3
2,8	3	3
3	3,5	5
3,5	4	7
4	5	7
5,8	7,25	10
6,2	8	10
7,5	9,5	12

3

Table **3**

Slide rings, material codes

Code	MS	Material type
AA	100	Unfilled PTFE (FDA approved)
AB	231	PTFE + low degree of metal oxide
AC	271	PTFE + polyoxybensoate (polymer)
AD	292	PTFE + bronze + molybdenum disulphide
AE	302	PTFE + carbon + graphite powder
AG	851	PTFE + carbon fibre
BK	426	PE-UHMW

Table **4**

Rubber parts, material and design codes

Code	MS	Rubber type
1	N70	Nitrile rubber, 70° IRH
2	N84	Nitrile rubber, low temperature, 70° IRH
3	F75	Fluorocarbon rubber, 75° IRH
4	Q70	Silicone rubber, 70° IRH
5	E70	Ethylene-propylene rubber (EPDM), 70° IRH
6	HN80	Hydrogenated nitrile rubber, 80° IRH
7	N70	X-ring XR, nitrile rubber, 70° IRH
8	N70	Square ring, nitrile rubber, 70° IRH

rgab.ru Берг АБ bergab@ya.ru Тел. (495)-228-06-21, факс (495) 2

rgab.ru Берг АБ bergab@ya.ru Тел. (495)-228-06-21, факс (495) 2

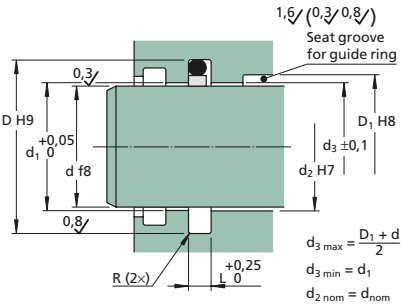

Type GL
Normal design with slide ring of unfilled PTFE and O-ring of nitrile rubber.
The housing dimensions stated are applicable at pressures of up to 20 MPa. In applications with higher pressures the slide ring must be manufactured of a PTFE material with a filler, e.g. carbon or bronze.
For additional housing dimensions see **Table 2, page 145**.

Dimensions						Designation
d	D	L	d_1 at pressure (MPa) 0 – 10	(10) – 20	R	
mm						–
4	8	2	4,2	4,1	0,2	**CR GL 4×8×2-AA1**
5	9	2	5,2	5,1	0,2	**CR GL 5×9×2-AA1**
6	10	2	6,2	6,1	0,2	**CR GL 6×10×2-AA1**
8	12	2	8,2	8,1	0,2	**CR GL 8×12×2-AA1**
10	14	2	10,2	10,1	0,2	**CR GL 10×14×2-AA1**
12	16	2	12,2	12,1	0,2	**CR GL 12×16×2-AA1**
13	19	2,8	13,2	13,1	0,3	**CR GL 13×19×2.8-AA1**
14	20	2,8	14,2	14,1	0,3	**CR GL 14×20×2.8-AA1**
15	19	2	15,2	15,1	0,2	**CR GL 15×19×2-AA1**
	21	2,8	15,2	15,1	0,3	**CR GL 15×21×2.8-AA1**
	22	3	15,3	15,2	0,3	**CR GL 15×22×3-AA1**
16	20	2	16,2	16,1	0,2	**CR GL 16×20×2-AA1**
	22	2,8	16,2	16,1	0,3	**CR GL 16×22×2.8-AA1**
	23	3	16,3	16,2	0,3	**CR GL 16×23×3-AA1**
18	22	2	18,2	18,1	0,2	**CR GL 18×22×2-AA1**
	24	2,8	18,2	18,1	0,3	**CR GL 18×24×2.8-AA1**
	25	3	18,3	18,2	0,3	**CR GL 18×25×3-AA1**
20	24	2	20,2	20,1	0,2	**CR GL 20×24×2-AA1**
	26	2,8	20,2	20,1	0,3	**CR GL 20×26×2.8-AA1**
	27	3	20,3	20,2	0,3	**CR GL 20×27×3-AA1**
22	28	2,8	22,2	22,1	0,3	**CR GL 22×28×2.8-AA1**
	29	3	22,3	22,2	0,3	**CR GL 22×29×3-AA1**
25	31	2,8	25,2	25,1	0,3	**CR GL 25×31×2.8-AA1**
	32	3	25,3	25,2	0,3	**CR GL 25×32×3-AA1**
	33	3,5	25,3	25,2	0,5	**CR GL 25×33×3.5-AA1**
28	34	2,8	28,2	28,1	0,3	**CR GL 28×34×2.8-AA1**
	35	3	28,3	28,2	0,3	**CR GL 28×35×3-AA1**
	36	3,5	28,3	28,2	0,5	**CR GL 28×36×3.5-AA1**

rgab.ru Берг АБ bergab@ya.ru Тел. (495)-228-06-21, факс (495) 2

rgab.ru Берг АБ bergab@ya.ru Тел. (495)-228-06-21, факс (495) 2

Dimensions						Designation
d	D	L	d_1 at pressure (MPa) 0 – 10	(10) – 20	R	
mm						–
30	36	2,8	30,2	30,1	0,3	**CR GL 30×36×2.8-AA1**
	37	3	30,3	30,2	0,3	**CR GL 30×37×3-AA1**
	38	3,5	30,3	30,2	0,5	**CR GL 30×38×3.5-AA1**
32	38	2,8	32,2	32,1	0,3	**CR GL 32×38×2.8-AA1**
	39	3	32,3	32,2	0,3	**CR GL 32×39×3-AA1**
	40	3,5	32,3	32,3	0,5	**CR GL 32×40×3.5-AA1**
35	42	3	35,3	35,2	0,3	**CR GL 35×42×3-AA1**
	43	3,5	35,3	35,2	0,5	**CR GL 35×43×3.5-AA1**
36	44	3,5	36,3	36,2	0,5	**CR GL 36×44×3.5-AA1**
40	48	3,5	40,3	40,2	0,5	**CR GL 40×48×3.5-AA1**
45	53	3,5	45,3	45,2	0,5	**CR GL 45×53×3.5-AA1**
50	58	3,5	50,3	50,2	0,5	**CR GL 50×58×3.5-AA1**
	60	4	50,4	50,3	0,5	**CR GL 50×60×4-AA1**
55	63	3,5	55,3	55,2	0,5	**CR GL 55×63×3.5-AA1**
	65	4	55,4	55,3	0,5	**CR GL 55×65×4-AA1**
56	64	3,5	56,3	56,2	0,5	**CR GL 56×64×3.5-AA1**
	66	4	56,4	56,3	0,5	**CR GL 56×66×4-AA1**
60	68	3,5	60,3	60,2	0,5	**CR GL 60×68×3.5-AA1**
	70	4	60,4	60,3	0,5	**CR GL 60×70×4-AA1**
63	71	3,5	63,3	63,2	0,5	**CR GL 63×71×3.5-AA1**
	73	4	63,4	63,3	0,5	**CR GL 63×73×4-AA1**
65	73	3,5	65,3	65,2	0,5	**CR GL 65×73×3.5-AA1**
	75	4	65,4	65,3	0,5	**CR GL 65×75×4-AA1**
70	78	3,5	70,3	70,2	0,5	**CR GL 70×78×3.5-AA1**
	80	4	70,4	70,3	0,5	**CR GL 70×80×4-AA1**
	84,5	5,8	70,5	70,2	0,7	**CR GL 70×84.5×5.8-AA1**
75	85	4	75,4	75,3	0,5	**CR GL 75×85×4-AA1**
	89,5	5,8	75,6	75,4	0,7	**CR GL 75×89.5×5.8-AA1**

rgab.ru Берг АБ bergab@ya.ru Тел. (495)-228-06-21, факс (495) 2

rgab.ru Берг АБ bergab@ya.ru Тел. (495)-228-06-21, факс (495) 2

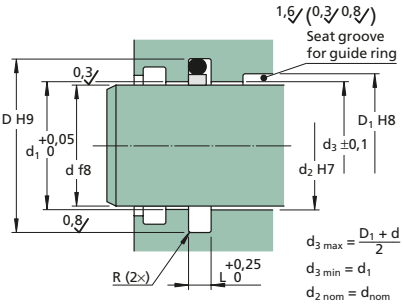

Type GL
Normal design with slide ring of unfilled PTFE and O-ring of nitrile rubber.
The housing dimensions stated are applicable at pressures of up to 20 MPa. In applications with higher pressures the slide ring must be manufactured of a PTFE material with a filler, e.g. carbon or bronze.
For additional housing dimensions see **Table 2, page 145**.

Dimensions						Designation
d	D	L	d_1 at pressure (MPa) 0 – 10	(10) – 20	R	
mm						–
80	90	4	80,4	80,3	0,5	**CR GL 80×90×4-AA1**
	94,5	5,8	80,6	80,4	0,7	**CR GL 80×94.5×5.8-AA1**
85	95	4	85,4	85,3	0,5	**CR GL 85×95×4-AA1**
	99,5	5,8	85,6	85,4	0,7	**CR GL 85×99.5×5.8-AA1**
90	100	4	90,4	90,3	0,5	**CR GL 90×100×4-AA1**
	104,5	5,8	90,6	90,4	0,7	**CR GL 90×104.5×5.8-AA1**
95	105	4	95,4	95,3	0,5	**CR GL 95×105×4-AA1**
	109,5	5,8	95,6	95,4	0,7	**CR GL 95×109.5×5.8-AA1**
100	110	4	100,4	100,3	0,5	**CR GL 100×110×4-AA1**
	114,5	5,8	100,6	100,4	0,7	**CR GL 100×114.5×5.8-AA1**
	116	6,2	100,6	100,4	0,7	**CR GL 100×116×6.2-AA1**
105	115	4	105,4	105,3	0,5	**CR GL 105×115×4-AA1**
	119,5	5,8	105,6	105,4	0,7	**CR GL 105×119.5×5.8-AA1**
	121	6,2	105,6	105,4	0,7	**CR GL 105×121×6.2-AA1**
110	120	4	110,4	110,3	0,5	**CR GL 110×120×4-AA1**
	124,5	5,8	110,6	110,4	0,7	**CR GL 110×124.5×5.8-AA1**
	126	6,2	110,6	110,4	0,7	**CR GL 110×126×6.2-AA1**
115	129,5	5,8	115,6	115,4	0,7	**CR GL 115×129.5×5.8-AA1**
	131	6,2	115,6	115,4	0,7	**CR GL 115×131×6.2-AA1**
120	134,5	5,8	120,6	120,4	0,7	**CR GL 120×134.5×5.8-AA1**
	136	6,2	120,6	120,4	0,7	**CR GL 120×136×6.2-AA1**
125	139,5	5,8	125,6	125,4	0,7	**CR GL 125×139.5×5.8-AA1**
	141	6,2	125,6	125,4	0,7	**CR GL 125×141×6.2-AA1**
130	144,5	5,8	130,6	130,4	0,7	**CR GL 130×144.5×5.8-AA1**
	146	6,2	130,6	130,4	0,7	**CR GL 130×146×6.2-AA1**
135	149,5	5,8	135,6	135,4	0,7	**CR GL 135×149.5×5.8-AA1**
	151	6,2	135,6	135,4	0,7	**CR GL 135×151×6.2-AA1**
140	154,5	5,8	140,6	140,4	0,7	**CR GL 140×154.5×5.8-AA1**
	156	6,2	140,6	140,4	0,7	**CR GL 140×156×6.2-AA1**

rgab.ru Берг АБ bergab@ya.ru Тел. (495)-228-06-21, факс (495) 2

rgab.ru Берг АБ bergab@ya.ru Тел. (495)-228-06-21, факс (495) 2

Dimensions						Designation
d	D	L	d_1 at pressure (MPa) 0 – 10	(10) – 20	R	
mm						–
145	161	6,2	145,6	145,4	0,7	**CR GL 145×161×6.2-AA1**
150	166	6,2	150,6	150,4	0,7	**CR GL 150×166×6.2-AA1**
155	171	6,2	155,6	155,4	0,7	**CR GL 155×171×6.2-AA1**
160	176	6,2	160,6	160,4	0,7	**CR GL 160×176×6.2-AA1**
	179	7,5	160,7	160,5	1	**CR GL 160×179×7.5-AA1**
165	181	6,2	165,6	165,4	0,7	**CR GL 165×181×6.2-AA1**
	184	7,5	165,7	165,5	1	**CR GL 165×184×7.5-AA1**
170	186	6,2	170,6	170,4	0,7	**CR GL 170×186×6.2-AA1**
	189	7,5	170,7	170,5	1	**CR GL 170×189×7.5-AA1**
175	191	6,2	175,6	175,4	0,7	**CR GL 175×191×6.2-AA1**
	194	7,5	175,7	175,5	1	**CR GL 175×194×7.5-AA1**
180	196	6,2	180,6	180,4	0,7	**CR GL 180×196×6.2-AA1**
	199	7,5	180,7	180,5	1	**CR GL 180×199×7.5-AA1**
185	201	6,2	185,6	185,4	0,7	**CR GL 185×201×6.2-AA1**
	204	7,5	185,7	185,5	1	**CR GL 185×204×7.5-AA1**
190	206	6,2	190,6	190,4	0,7	**CR GL 190×206×6.2-AA1**
	209	7,5	190,7	190,5	1	**CR GL 190×209×7.5-AA1**
195	211	6,2	195,6	195,4	0,7	**CR GL 195×211×6.2-AA1**
	214	7,5	195,7	195,5	1	**CR GL 195×214×7.5-AA1**
200	219	7,5	200,7	200,5	1	**CR GL 200×219×7.5-AA1**
210	229	7,5	210,7	210,5	1	**CR GL 210×229×7.5-AA1**
220	239	7,5	220,7	220,5	1	**CR GL 220×239×7.5-AA1**
230	249	7,5	230,7	230,5	1	**CR GL 230×249×7.5-AA1**
240	259	7,5	240,7	240,5	1	**CR GL 240×259×7.5-AA1**
250	269	7,5	250,7	250,5	1	**CR GL 250×269×7.5-AA1**

rgab.ru Берг АБ bergab@ya.ru Тел. (495)-228-06-21, факс (495) 2

rgab.ru Берг АБ bergab@ya.ru Тел. (495)-228-06-21, факс (495) 22

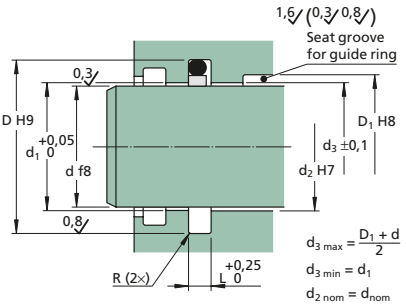

Type GL
Normal design with slide ring of unfilled PTFE and O-ring of nitrile rubber.
The housing dimensions stated are applicable at pressures of up to 20 MPa. In applications with higher pressures the slide ring must be manufactured of a PTFE material with a filler, e.g. carbon or bronze.
For additional housing dimensions see **Table 2, page 145**.

Dimensions						Designation
d	D	L	d_1 at pressure (MPa) 0 – 10	(10) – 20	R	
mm						–
260	279	7,5	260,7	260,5	1	**CR GL 260×279×7.5-AA1**
270	289	7,5	270,7	270,5	1	**CR GL 270×289×7.5-AA1**
280	299	7,5	280,7	280,5	1	**CR GL 280×299×7.5-AA1**
290	309	7,5	290,7	290,5	1	**CR GL 290×309×7.5-AA1**
300	319	7,5	300,7	300,5	1	**CR GL 300×319×7.5-AA1**
310	329	7,5	310,7	310,5	1	**CR GL 310×329×7.5-AA1**
320	339	7,5	320,7	320,5	1	**CR GL 320×339×7.5-AA1**
330	349	7,5	330,7	330,5	1	**CR GL 330×349×7.5-AA1**
340	359	7,5	340,7	340,5	1	**CR GL 340×359×7.5-AA1**
350	369	7,5	350,7	350,5	1	**CR GL 350×369×7.5-AA1**
360	379	7,5	360,7	360,5	1	**CR GL 360×379×7.5-AA1**

rgab.ru Берг АБ bergab@ya.ru Тел. (495)-228-06-21, факс (495) 22

rgab.ru Берг АБ bergab@ya.ru Тел. (495)-228-06-21, факс (495) 22

rgab.ru Берг АБ bergab@ya.ru Тел. (495)-228-06-21, факс (495) 22

rgab.ru Берг АБ bergab@ya.ru Тел. (495)-228-06-21, факс (495) 2

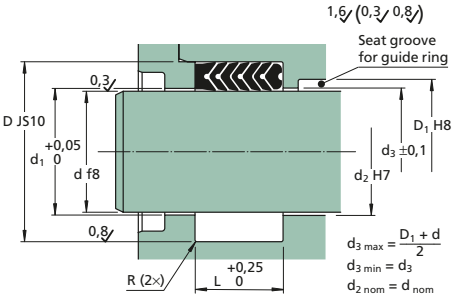

Type CH-7
Bottom ring and three V-rings of fabric reinforced nitrile rubber. Two V-rings of nitrile rubber and top ring of fabric reinforced nitrile rubber or acetal resin.

The housing dimensions and tolerances stated are applicable at pressures of up to 25 MPa. Applications with higher pressures demand special housing dimensions.

Dimensions					Designation
d	D	L	d_1	R	
mm					–
14	24	18,5	14,2	0,3	**CR CH 14×24×18.5-7**
20	30	18,5	20,2	0,3	**CR CH 20×30×18.5-7**
	32	22,5	20,2	0,3	**CR CH 20×32×22.5-7**
22	32	18,5	22,2	0,3	**CR CH 22×32×18.5-7**
25	37	22,5	25,2	0,3	**CR CH 25×37×22.5-7**
	40	22,5	25,2	0,4	**CR CH 25×40×22.5-7**
28	40	22,5	28,2	0,3	**CR CH 28×40×22.5-7**
	43	22,5	28,2	0,4	**CR CH 28×43×22.5-7**
30	42	22,5	30,2	0,3	**CR CH 30×42×22.5-7**
	45	22,5	30,2	0,4	**CR CH 30×45×22.5-7**
32	47	22,5	32,2	0,4	**CR CH 32×47×22.5-7**
35	47	22,5	35,2	0,3	**CR CH 35×47×22.5-7**
	50	22,5	35,2	0,4	**CR CH 35×50×22.5-7**
36	48	22,5	36,2	0,3	**CR CH 36×48×22.5-7**
	51	22,5	36,2	0,4	**CR CH 36×51×22.5-7**
40	55	22,5	40,2	0,4	**CR CH 40×55×22.5-7**
42	57	22,5	42,2	0,4	**CR CH 42×57×22.5-7**
45	60	22,5	45,2	0,4	**CR CH 45×60×22.5-7**
	65	27,5	45,2	0,6	**CR CH 45×65×27.5-7**
50	65	22,5	50,2	0,4	**CR CH 50×65×22.5-7**
	70	30	50,2	0,6	**CR CH 50×70×30.5-7**
55	70	22,5	55,2	0,4	**CR CH 55×70×22.5-7**
	75	30	55,2	0,6	**CR CH 55×75×30.5-7**
56	71	22,5	56,2	0,4	**CR CH 56×71×22.5-7**
60	75	22,5	60,2	0,4	**CR CH 60×75×22.5-7**
	80	37	60,2	0,6	**CR CH 60×80×37.5-7**

Dimensions					Designation
d	D	L	d_1	R	
mm					–
63	78	22,5	63,2	0,4	**CR CH 63×78×22.5-7**
	83	37	63,2	0,6	**CR CH 63×83×37.5-7**
65	80	22,5	65,2	0,4	**CR CH 65×80×22.5-7**
	85	40	65,2	0,6	**CR CH 65×85×40-7**
70	85	22,5	70,2	0,4	**CR CH 70×85×22.5-7**
	90	40	70,2	0,6	**CR CH 70×90×40-7**
75	90	22,5	75,2	0,4	**CR CH 75×90×22.5-7**
	95	40	75,2	0,6	**CR CH 76×95×40.5-7**
80	95	22,5	80,2	0,4	**CR CH 80×95×22.5-7**
	100	40	80,2	0,6	**CR CH 80×100×40-7**
85	100	22,5	85,2	0,4	**CR CH 85×100×22.5-7**
	105	40	85,2	0,6	**CR CH 85×105×40.5-7**
90	105	22,5	90,2	0,4	**CR CH 90×105×22.5-7**
	110	40	90,2	0,6	**CR CH 90×110×40.5-7**
100	115	30	100,2	0,4	**CR CH 100×115×30-7**
	120	40	100,2	0,6	**CR CH 100×120×40.5-7**
105	125	40	105,2	0,6	**CR CH 105×125×40.5-7**
110	125	30	110,2	0,4	**CR CH 110×125×30-7**
	130	40	110,2	0,6	**CR CH 110×130×40-7**
115	130	30	115,2	0,4	**CR CH 115×130×30.5-7**
	140	46	115,2	0,8	**CR CH 115×140×46.5-7**
120	135	30	120,2	0,4	**CR CH 120×135×30.5-7**
	145	46	120,2	0,8	**CR CH 120×145×46.5-7**
125	140	34	125,2	0,4	**CR CH 125×140×34-7**
	150	46	125,2	0,8	**CR CH 125×150×46-7**
130	145	34	130,2	0,4	**CR CH 130×145×34.5-7**
140	155	34	140,2	0,4	**CR CH 140×155×34-7**
	165	46	140,2	0,8	**CR CH 140×165×46-7**

rgab.ru Берг АБ bergab@ya.ru Тел. (495)-228-06-21, факс (495) 2

rgab.ru Берг АБ bergab@ya.ru Тел. (495)-228-06-21, факс (495) 2

Dimensions					Designation
d	D	L	d_1	R	
mm					–
150	170	40	150,2	0,6	**CR CH 150×170×40.5-7**
	180	60	150,2	0,8	**CR CH 150×180×60.5-7**
160	180	40	160,2	0,6	**CR CH 160×180×40.5-7**
	190	60	160,2	0,8	**CR CH 160×190×60.5-7**
170	200	60	170,2	0,8	**CR CH 170×200×60.5-7**
180	200	40	180,2	0,6	**CR CH 180×200×40.5-7**
	210	60	180,2	0,8	**CR CH 180×210×60.5-7**
200	220	40	200,2	0,6	**CR CH 200×220×40.5-7**
	230	60	200,2	0,8	**CR CH 200×230×60.5-7**
220	250	66	220,2	0,8	**CR CH 220×250×66.5-7**
240	270	64	240,2	0,8	**CR CH 240×270×64.5-7**
420	450	70	420,2	0,8	**CR CH 420×450×70.5-7**
500	550	100	500,2	0,3	**CR CH 500×550×100.5-7**

rgab.ru Берг АБ bergab@ya.ru Тел. (495)-228-06-21, факс (495) 2

rgab.ru Берг АБ bergab@ya.ru Тел. (495)-228-06-21, факс (495) 2

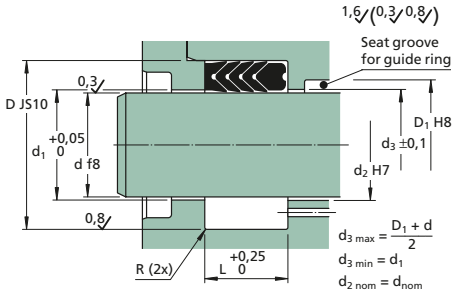

Type CH-5
Bottom ring and V-rings of fabric reinforced nitrile rubber, top ring of fabric reinforced nitrile rubber or acetal resin.
The housing dimensions and tolerances stated are applicable at pressures of up to 25 MPa. Applications with higher pressures demand special housing dimensions.

Dimensions					Designation
d	D	L	d_1	R	
mm					–
25	35	19,6	25,2	0,3	**CR CH 25×35×19.6-5**
28	44	17,6	28,2	0,3	**CR CH 28×44×17.6-5**
30	40	21,8	30,2	0,3	**CR CH 30×40×21.8-5**
	50	29,3	30,2	0,6	**CR CH 30×50×29.3-5**
35	45	21,8	35,2	0,3	**CR CH 35×45×21.8-5**
	50	22,5	35,2	0,4	**CR CH 35×50×22.5-5**
36	52	17,6	36,2	0,3	**CR CH 36×52×17.6-5**
40	50	10,5	40,2	0,3	**CR CH 40×50×10.5-5**
	50	17,3	40,2	0,3	**CR CH 40×50×17.3-5**
	55	22,6	40,2	0,4	**CR CH 40×55×22.5-5**
	55	26,2	40,2	0,4	**CR CH 40×55×26.2-5**
	60	30	40,2	0,6	**CR CH 40×60×30-5**
	65	35,7	40,2	0,8	**CR CH 40×65×35.7-5**
45	60	22,2	45,2	0,4	**CR CH 45×60×22.2-5**
	61	29	45,2	0,3	**CR CH 45×61×29-5**
	65	28	45,2	0,6	**CR CH 45×65×28-5**
48	60	25	48,2	0,3	**CR CH 48×60×25-5**
50	65	19,4	50,2	0,4	**CR CH 50×65×19.4-5**
	65	24,5	50,2	0,4	**CR CH 50×65×24.5-5**
	65	29	50,2	0,4	**CR CH 50×65×29-5**
	70	30	50,2	0,6	**CR CH 50×70×30-5**
55	67	25	55,2	0,3	**CR CH 55×67×25-5**
	70	26,5	55,2	0,4	**CR CH 55×70×26.5-5**
	75	38	55,2	0,6	**CR CH 55×75×38-5**
56	76	37	56,2	0,6	**CR CH 56×76×37-5**
60	76	29	60,2	0,3	**CR CH 60×76×29-5**
	77	27	60,2	0,3	**CR CH 60×77×27-5**
	80	32,2	60,2	0,6	**CR CH 60×80×32.2-5**
63	83	21,9	63,2	0,6	**CR CH 63×83×21.9-5**

Dimensions					Designation
d	D	L	d_1	R	
mm					–
64	80	25,8	64,2	0,3	**CR CH 64×80×25.8-5**
65	77	28,3	65,2	0,3	**CR CH 65×77×28.3-5**
	85	29	65,2	0,6	**CR CH 65×85×29-5**
	85	40	65,2	0,6	**CR CH 65×85×40-5**
70	85	28	70,2	0,4	**CR CH 70×85×28-5**
	90	22	70,2	0,6	**CR CH 70×90×22-5**
	90	30	70,2	0,6	**CR CH 70×90×30-5**
75	90	22,5	75,2	0,4	**CR CH 75×90×22.5-5**
	95	30	75,2	0,6	**CR CH 75×95×30-5**
	100	37,5	75,2	0,8	**CR CH 75×100×37.5-5**
80	95	17,5	80,2	0,4	**CR CH 80×95×17.5-5**
	100	35	80,2	0,6	**CR CH 80×100×35-5**
90	105	33,5	90,2	0,4	**CR CH 90×105×33.5-5**
	110	25	90,2	0,6	**CR CH 90×110×25-5**
	110	30	90,2	0,6	**CR CH 90×110×30-5**
	110	40	90,2	0,6	**CR CH 90×110×40-5**
100	115	22,5	100,2	0,4	**CR CH 100×115×22.5-5**
	120	28	100,2	0,6	**CR CH 100×120×28-5**
	125	27,4	100,2	0,8	**CR CH 100×125×27.4-5**
	125	36,9	100,2	0,8	**CR CH 100×125×36.9-5**
105	125	29,7	105,2	0,6	**CR CH 105×125×29.7-5**
110	125	30	110,2	0,4	**CR CH 105×125×29.7-5**
114	130	25,8	114,2	0,3	**CR CH 114×130×25.8-5**
120	140	30	120,2	0,6	**CR CH 120×140×30-5**
	150	44	120,2	0,8	**CR CH 120×150×44-5**
125	150	27,4	125,2	0,8	**CR CH 125×150×27.4-5**
130	150	29,7	130,2	0,6	**CR CH 130×150×29.7-5**
	160	25	130,2	0,8	**CR CH 130×160×25-5**
135	155	30,5	135,2	0,6	**CR CH 135×155×30.5-5**

rgab.ru Берг АБ bergab@ya.ru Тел. (495)-228-06-21, факс (495) 2

rgab.ru Берг АБ bergab@ya.ru Тел. (495)-228-06-21, факс (495) 2

Dimensions					Designation
d	D	L	d_1	R	
mm					–
140	160	28	140,2	0,6	**CR CH 140×160×28-5**
	160	30	140,2	0,6	**CR CH 140×160×30-5**
	170	32,9	140,2	0,8	**CR CH 140×170×32.9-5**
145	170	38,1	145,2	0,8	**CR CH 145×170×38.1-5**
150	170	30,5	150,2	0,6	**CR CH 150×170×30.5-5**
	180	40	150,2	0,8	**CR CH 150×180×40-5**
157	182	30,2	157,2	0,8	**CR CH 157×182×30.2-5**
160	190	33	160,2	0,8	**CR CH 160×190×33-5**
	190	60	160,2	0,8	**CR CH 160×190×60-5**
170	195	37,5	170,2	0,8	**CR CH 170×195×37.5-5**
175	200	42	175,2	0,8	**CR CH 175×200×42-5**
185	215	58	185,2	0,8	**CR CH 185×215×58-5**
200	230	45	200,2	0,8	**CR CH 200×230×45-5**
205	225	19,5	205,2	0,6	**CR CH 205×225×19.5-5**
210	240	42,1	210,2	0,8	**CR CH 210×240×42.1-5**
220	250	60	270,2	0,8	**CR CH 220×250×60-5**
270	300	50,5	270,2	0,8	**CR CH 270×300×50.5-5**
490	530	60,4	490,2	1	**CR CH 490×530×60.4-5**

rgab.ru Берг АБ bergab@ya.ru Тел. (495)-228-06-21, факс (495) 2

rgab.ru Берг АБ bergab@ya.ru Тел. (495)-228-06-21, факс (495) 2

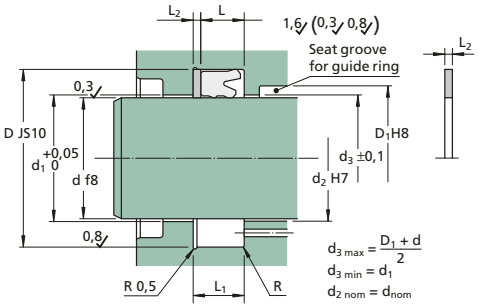

Type STR
Back-up ring of acetal resin with the same sectional dimension as that of the seal, called "full face". The basic design is split to facilitate assembly.

New dimensions are continuously added. Please contact us if you do not find the dimension for your application.

Dimensions				Designation
d	D	L_2	R	
mm				–
25	33	2	0,3	**CR STR 25×33×2/D-A**
	35	2	0,3	**CR STR 25×35×2/D-A**
28	36	2	0,3	**CR STR 28×36×2/D-A**
	38	2	0,3	**CR STR 28×38×2/D-A**
30	38	2	0,3	**CR STR 30×38×2/D-A**
	40	2	0,3	**CR STR 30×40×2/D-A**
	45	2	0,4	**CR STR 30×45×2/D-A**
32	40	2	0,3	**CR STR 32×40×2/D-A**
	42	2	0,3	**CR STR 32×42×2/D-A**
	47	2	0,4	**CR STR 32×47×2/D-A**
33	43	2	0,3	**CR STR 33×43×2/D-A**
35	43	2	0,3	**CR STR 35×43×2/D-A**
	45	2	0,3	**CR STR 35×45×2/D-A**
	50	2	0,4	**CR STR 35×50×2/D-A**
36	44	2	0,3	**CR STR 36×44×2/D-A**
	46	2	0,3	**CR STR 36×46×2/D-A**
	51	2	0,4	**CR STR 36×51×2/D-A**
40	48	2	0,3	**CR STR 40×48×2/D-A**
	50	2	0,3	**CR STR 40×50×2/D-A**
	55	2	0,4	**CR STR 40×55×2/D-A**
45	53	2	0,3	**CR STR 45×53×2/D-A**
	55	2	0,3	**CR STR 45×55×2/D-A**
	60	2	0,4	**CR STR 45×60×2/D-A**
50	58	2	0,3	**CR STR 50×58×2/D-A**
	60	2	0,3	**CR STR 50×60×2/D-A**
	65	2	0,4	**CR STR 50×65×2/D-A**
55	63	2	0,3	**CR STR 55×63×2/D-A**
	65	2	0,3	**CR STR 55×65×2/D-A**
	70	2	0,4	**CR STR 55×70×2/D-A**
56	66	2	0,3	**CR STR 56×66×2/D-A**
	71	2	0,4	**CR STR 56×71×2/D-A**

Dimensions				Designation
d	D	L_2	R	
mm				–
60	68	2	0,3	**CR STR 60×68×2/D-A**
	70	2	0,3	**CR STR 60×70×2/D-A**
	75	2	0,4	**CR STR 60×75×2/D-A**
	80	3	0,6	**CR STR 60×80×3/D-A**
63	71	2	0,3	**CR STR 63×71×2/D-A**
	73	2	0,3	**CR STR 63×73×2/D-A**
	78	2	0,4	**CR STR 63×78×2/D-A**
	83	3	0,6	**CR STR 63×83×3/D-A**
65	73	2	0,3	**CR STR 65×73×2/D-A**
	75	2	0,3	**CR STR 65×75×2/D-A**
	80	2	0,4	**CR STR 65×80×2/D-A**
	85	3	0,6	**CR STR 65×85×3/D-A**
70	78	2	0,3	**CR STR 70×78×2/D-A**
	80	2	0,3	**CR STR 70×80×2/D-A**
	85	2	0,4	**CR STR 70×85×2/D-A**
	90	3	0,6	**CR STR 70×90×3/D-A**
75	83	2	0,3	**CR STR 75×83×2/D-A**
	85	2	0,3	**CR STR 75×85×2/D-A**
	90	2	0,4	**CR STR 75×90×2/D-A**
	95	3	0,6	**CR STR 75×95×3/D-A**
80	88	2	0,3	**CR STR 80×88×2/D-A**
	90	2	0,3	**CR STR 80×90×2/D-A**
	95	2	0,4	**CR STR 80×95×2/D-A**
	100	3	0,6	**CR STR 80×100×3/D-A**
85	93	2	0,3	**CR STR 85×93×2/D-A**
	95	2	0,3	**CR STR 85×95×2/D-A**
	100	2	0,4	**CR STR 85×100×2/D-A**
	105	3	0,6	**CR STR 85×105×3/D-A**
90	98	2	0,3	**CR STR 90×98×2/D-A**
	100	2	0,3	**CR STR 90×100×2/D-A**
	105	2	0,4	**CR STR 90×105×2/D-A**
	110	3	0,6	**CR STR 90×110×3/D-A**

rgab.ru Берг АБ bergab@ya.ru Тел. (495)-228-06-21, факс (495) 2

rgab.ru Берг АБ bergab@ya.ru Тел. (495)-228-06-21, факс (495) 2

Dimensions				Designation
d	D	L_2	R	
mm				–
95	103	2	0,3	**CR STR 95×103×2/D-A**
	105	2	0,3	**CR STR 95×105×2/D-A**
	110	2	0,4	**CR STR 95×110×2/D-A**
	115	3	0,6	**CR STR 95×115×3/D-A**
100	108	2	0,3	**CR STR 100×108×2/D-A**
	110	2	0,3	**CR STR 100×110×2/D-A**
	115	2	0,4	**CR STR 100×115×2/D-A**
	120	3	0,6	**CR STR 100×120×3/D-A**
105	115	2	0,3	**CR STR 105×115×2/D-A**
	120	2	0,4	**CR STR 105×120×2/D-A**
	125	3	0,6	**CR STR 105×125×3/D-A**
110	120	2	0,3	**CR STR 110×120×2/D-A**
	125	2	0,4	**CR STR 110×125×2/D-A**
	130	3	0,6	**CR STR 110×130×3/D-A**
113	123	2	0,3	**CR STR 113×123×2/D-A**
115	125	2	0,3	**CR STR 115×125×2/D-A**
	130	2	0,4	**CR STR 115×130×2/D-A**
	135	3	0,6	**CR STR 115×135×3/D-A**
120	130	2	0,3	**CR STR 120×130×2/D-A**
	135	2	0,4	**CR STR 120×135×2/D-A**
	140	3	0,6	**CR STR 120×140×3/D-A**
125	140	2	0,4	**CR STR 125×140×2/D-A**
	145	3	0,6	**CR STR 125×145×3/D-A**
130	145	2	0,4	**CR STR 130×145×2/D-A**
	150	3	0,6	**CR STR 130×150×3/D-A**
135	150	2	0,4	**CR STR 135×150×2/D-A**
140	155	2	0,4	**CR STR 140×155×2/D-A**
	160	3	0,6	**CR STR 140×160×3/D-A**
145	160	2	0,4	**CR STR 145×160×2/D-A**

Dimensions				Designation
d	D	L_2	R	
mm				–
150	165	2	0,4	**CR STR 150×165×2/D-A**
	170	3	0,6	**CR STR 150×170×3/D-A**
160	175	2	0,4	**CR STR 160×175×2/D-A**
	180	3	0,6	**CR STR 160×180×3/D-A**
165	180	2	0,4	**CR STR 165×180×2/D-A**
170	185	2	0,4	**CR STR 170×185×2/D-A**
	190	3	0,6	**CR STR 170×190×3/D-A**
175	190	2	0,4	**CR STR 175×190×2/D-A**
180	195	2	0,4	**CR STR 180×195×2/D-A**
	200	3	0,6	**CR STR 180×200×3/D-A**
190	210	3	0,6	**CR STR 190×210×3/D-A**
200	220	3	0,6	**CR STR 200×220×3/D-A**
210	230	3	0,6	**CR STR 210×230×3/D-A**
220	240	3	0,6	**CR STR 220×240×3/D-A**
230	250	3	0,6	**CR STR 230×250×3/D-A**
240	260	3	0,6	**CR STR 240×260×3/D-A**
250	270	3	0,6	**CR STR 250×270×3/D-A**

rgab.ru Берг АБ bergab@ya.ru Тел. (495)-228-06-21, факс (495) 2

rgab.ru Берг АБ bergab@ya.ru Тел. (495)-228-06-21, факс (495) 22

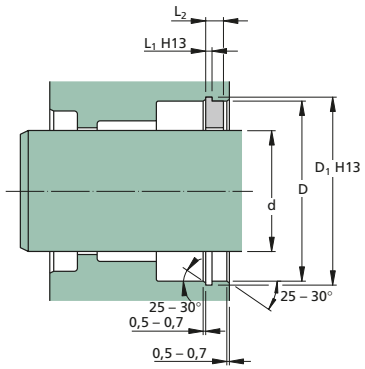

Type RI
Retainer ring of acetal resin.

Dimensions					Designation
d	D	D_1	L_1	L_2	
mm					–
16	24	25,2	1,3	4,5	**CR RI 16×24×1.3×4.5-A**
20	30	31,4	1,3	4,5	**CR RI 20×30×1.3×4.5-A**
22	30	31,4	1,3	4,5	**CR RI 22×30×1.3×4.5-A**
25	35	37	1,6	5	**CR RI 25×35×1.6×5-A**
28	38	40	1,6	5	**CR RI 28×38×1.6×5-A**
30	40	42,5	1,85	5	**CR RI 30×40×1.85×5-A**
32	40	42,5	1,85	5	**CR RI 32×40×1.85×5-A**
	42	44,5	1,85	5	**CR RI 32×42×1.85×5-A**
35	45	47,5	1,85	5	**CR RI 35×45×1.85×5-A**
	50	53	2,15	5	**CR RI 35×50×2.15×5-A**
36	46	48,5	1,85	5	**CR RI 36×46×1.85×5-A**
40	50	53	2,15	5	**CR RI 40×50×2.15×5-A**
	55	58	2,15	5	**CR RI 40×55×2.15×5-A**
45	55	58	2,15	5	**CR RI 45×55×2.15×5-A**
	65	68	2,65	6	**CR RI 45×65×2.65×6-A**
50	60	63	2,15	5	**CR RI 50×60×2.15×5-A**
	65	68	2,65	6	**CR RI 50×65×2.65×6-A**
	70	73	2,65	6	**CR RI 50×70×2.65×6-A**
56	66	69	2,65	6	**CR RI 56×66×2.65×6-A**
	71	74	2,65	6	**CR RI 56×71×2.65×6-A**
60	75	78	2,65	6	**CR RI 60×75×2.65×6-A**
	80	83	2,65	6	**CR RI 60×80×2.65×6-A**
63	78	81	2,65	6	**CR RI 63×78×2.65×6-A**
	83	86	2,65	6	**CR RI 63×83×2.65×6-A**
65	80	83	2,65	6	**CR RI 65×80×2.65×6-A**

rgab.ru Берг АБ bergab@ya.ru Тел. (495)-228-06-21, факс (495) 22

rgab.ru Берг АБ bergab@ya.ru Тел. (495)-228-06-21, факс (495) 2

Dimensions					Designation
d	D	D_1	L_1	L_2	
mm					–
70	80	83	3,15	7,5	**CR RI 70×80×3.15×7.5-A**
75	90	93,5	3,15	7,5	**CR RI 75×90×3.15×7.5-A**
80	100	103,5	3,15	6	**CR RI 80×100×3.15×6-A**
	95	98,5	3,15	7,5	**CR RI 80×95×3.15×7.5-A**
85	100	104	4,15	7,5	**CR RI 85×100×4.15×7.5-A**
90	100	104	3,15	7,5	**CR RI 90×100×3.15×7.5-A**
	105	109	4,15	7,5	**CR RI 90×105×4.15×7.5-A**
100	120	124,5	4,15	6	**CR RI 100×120×4.15×6-A**
110	130	134	4,15	10	**CR RI 110×130×4.15×10-A**
120	130	134	4,15	10	**CR RI 120×130×4.15×10-A**
125	145	149	4,15	10	**CR RI 125×145×4.15×10-A**
140	160	164	4,15	10	**CR RI 140×160×4.15×10-A**

rgab.ru Берг АБ bergab@ya.ru Тел. (495)-228-06-21, факс (495) 2

rgab.ru Берг АБ bergab@ya.ru Тел. (495)-228-06-21, факс (495) 2

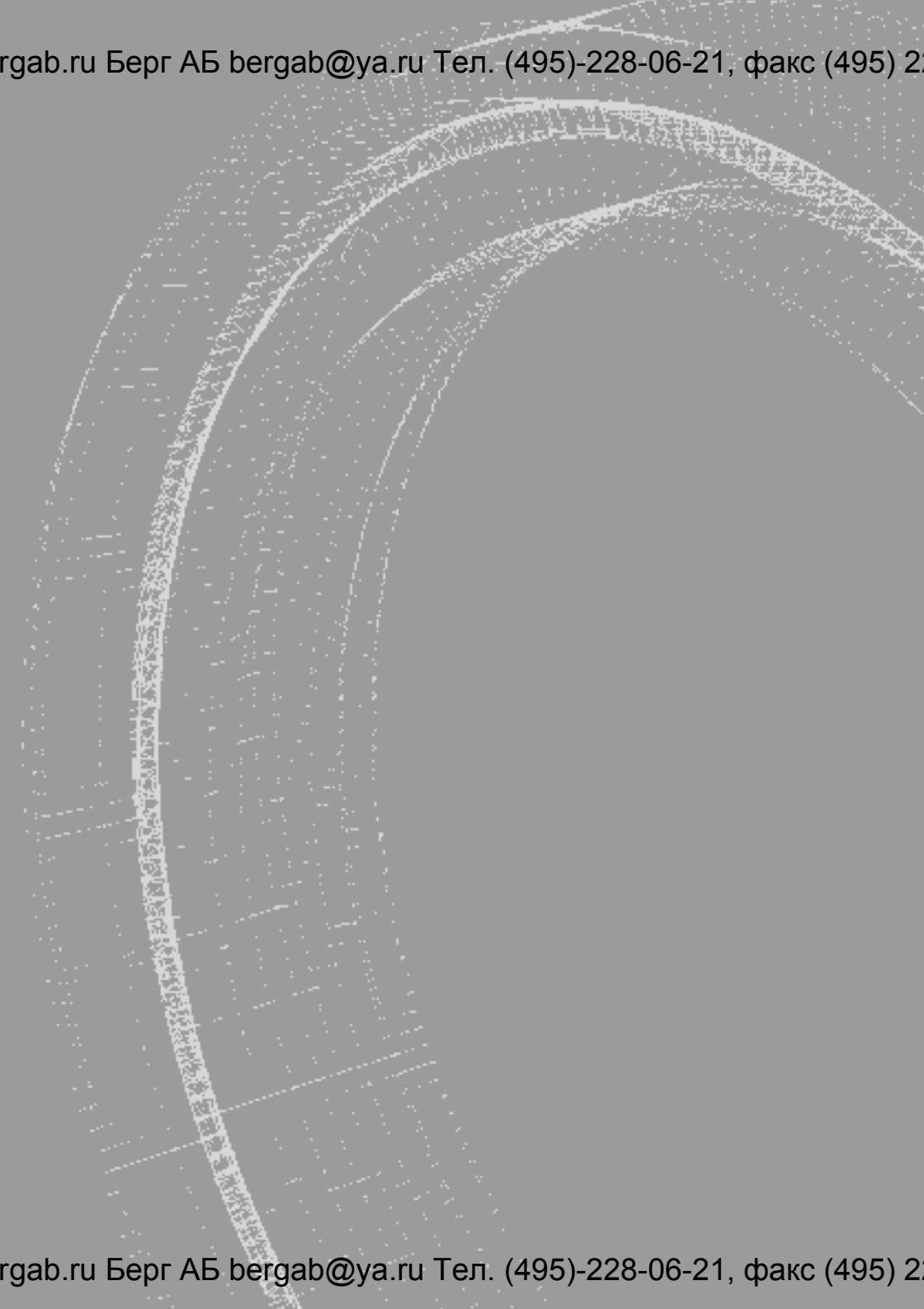

rgab.ru Берг АБ bergab@ya.ru Тел. (495)-228-06-21, факс (495) 2

rgab.ru Берг АБ bergab@ya.ru Тел. (495)-228-06-21, факс (495) 2

Wiper seals

Wiper seals **162**
Dynamic function 162
Static function 162
Metal reinforced wiper seals 163
Non-reinforced wiper seals 164
Double-acting wiper seals 165
Aggressive media 166
Piston wiper seals 166
Seal materials 166
Test results 166
Operating temperature 166
Module system 168
Assembly 168
Surface properties 170
Assembly into open housings 172
Assembly into closed housings 173

Product tables
PA 174
PAK 175
PAK .. L 176
PAD 177
GA 178
SCB 180
PWY 184
PWD 186
PWB 188
RSW 189
PO, PO2 190
SDR 194
SER 198
PW 202
DK 206
PPUA 207
PWF 208

rgab.ru Берг АБ bergab@ya.ru Тел. (495)-228-06-21, факс (495) 2

rgab.ru Берг АБ bergab@ya.ru Тел. (495)-228-06-21, факс (495) 2

Wiper seals

Contamination particles in the hydraulic system is the most common reason for breakdowns and short service life of seals. A major part of the particles reaches the system through the rod. The wiper seal's task is to prevent this.

The wiper seal is the most undervalued seal type in the hydraulic cylinder in relation to its important function. The choice of wiper seal should, however, be founded on as carefully drawn-up requirement specifications as the choice of piston and rod seals. The surrounding environment and service conditions must be taken into special consideration.

The wiper seal must be designed not only to fit the rod (dynamic function) but also to seal in the housing (static function).

Dynamic function

To be an effective wiper seal, the wiper lip's contact force against the rod must be satisfactory high. This is best achieved with an elastomeric material that has a relatively high hardness. Polyurethane with a hardness of 94° Shore A is a specifically appropriate material for wiper seals. Its properties are also characterized by high modulus (stiffness), very good wear resistance and low compression set. This material type can be used in most types of applications in the temperature range of –40 to +100 °C.

Static function

It is very difficult to reach effective static sealing in the housing for non-reinforced single-acting wipers, designed to be used in closed housing grooves. This is due to the fact that wipers of this group are loosely assembled in the housings. Only the counter force of the sealing lip's contact with the rod provides the sealing force between the wiper and the cylindrical surface. At decreasing temperature, when the entire wiper seal is shrinking, the risk for leakage between its outside diameter and the housing occurs. In order to reach acceptable function, this circumstance must be compensated for in the design of the wiper seal.

Non-reinforced double-acting wiper seals of nitrile rubber or polyurethane are designed to

Fig 1

Metal encased wiper seal types

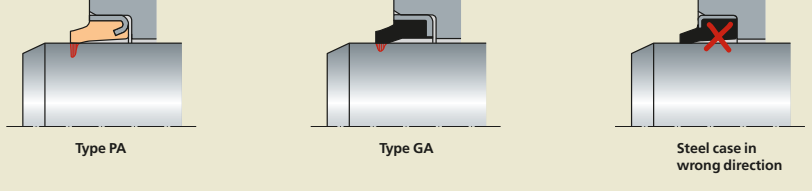

rgab.ru Берг АБ bergab@ya.ru Тел. (495)-228-06-21, факс (495) 2

rgab.ru Берг АБ bergab@ya.ru Тел. (495)-228-06-21, факс (495) 2

provide satisfactory static sealing between the wiper seal and the housing.

Effective static sealing in the housing can best be reached with metal reinforced wiper seals, designed for press fit assembly.

Metal reinforced wiper seals

The metal case of a reinforced wiper seal can be designed in various ways. Its main task is to fix the shape and position of the wiper lip and to enable a secure press fit assembly into an open housing, with the diameter tolerance H8. To be able to choose the correct wiper seal design for a certain application with specific requirements, it is important to know the basic metal case design principles for common metal reinforced wiper types. These are shown in **fig 1**.

In order to maintain its secure position in the housing also during severe service conditions the metal case must be directed so that its most rigid end with the flange is placed at the bottom of the housing. The radius from the deep drawing of the metal also facilitates the assembly into the housing. If, on the contrary, the metal case is directed as shown in the right figure of **fig 1** it can easily come loose.

Type PA is the most effective wiper seal type for demanding applications. For the production of this wiper type a specially selected polyetherurethane is used to achieve the high and durable contact force for the sealing lip that is necessary. To get a secure bonding between the polyurethane material and the metal surface, the shape of the metal case is specially designed and the steel sheet is extra thick, which in combination with its special shape provides a very high rigidity close to the bottom of the housing for an optimal fixation. The metal case is directed so that its radius from the deep drawing of the metal makes the assembly easier. Press forces at assembly and disassembly of PA 60×70×7×10 with different housing diameters are shown in **Diagram. 1**.

For less demanding applications metal encased wipers type GA with nitrile rubber 80° IRH are used. This hardness is optimal for nitrile rubber that cannot be made harder with regard to an acceptable level of flexibility at low temperature. As it is impossible to use sufficient hardness to reach a satisfactory contact force wipers of type GA are less effective than type PA. The metal case in type GA is directed so that its radius from the deep drawing of the metal makes the assembly easier and the shape of the metal case makes it very rigid at the bottom of the housing.

Diagram 1

Press forces at assembly and disassembly of type PA 60×70×7×10 at different housing diameters.
Correct housing dimension is
70 H8 (70,000 to 70,046)

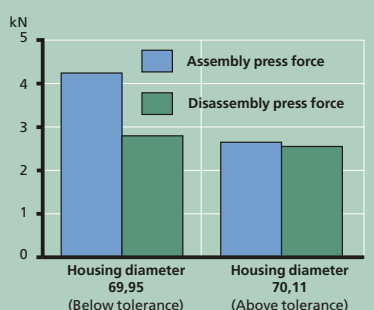

4

rgab.ru Берг АБ bergab@ya.ru Тел. (495)-228-06-21, факс (495) 2

rgab.ru Берг АБ bergab@ya.ru Тел. (495)-228-06-21, факс (495) 2

Non-reinforced wiper seals

Non-reinforced single-acting wiper seals traditionally designed to be assembled into closed housing grooves are not as effective as metal reinforced wiper seals. It is impossible to reach sufficient contact force against the rod surface and there is also a risk of leakage in the wiper seal housing, see **fig 3**.

In order to improve the effectiveness of non-reinforced wiper seals against the rod surface as well as the static sealing function the movability of the sealing device in the housing cavity must be reduced without creating difficulty at the assembling operation. This is for type PWB solved by a static sealing edge at the front face of the wiper body giving the wiper a fixed axial position in the housing groove and the inside diameter of the wiper body is equipped with axial ridges to prevent the wiper seal section tendency to get a distorted shape in the housing which could lead to reduced wiping efficiency, see **fig 4**.

With type PWY the static sealing function is improved by a second outwardly directed sealing lip that is sealing against the retainer diameter (D_1) surface. This design allows a good radial flexibility for both sealing lips against their counter surfaces within the rod guiding clearance and possible outbending of the rod. Type PWY wiper body is equipped with radial ridges to prevent the wiper seal section tendency to get a distorted shape in the housing which could lead to reduced wiping efficiency, see **fig 5**.

The design and manufacturing method for the cylindrical housing groove diameter is also of great importance to achieve an effective static sealing function. Usually the diameter tolerance H10 should be chosen. In some cases JS11 is applied. The cylindrical surface roughness value of the housing groove should be 0,80 to 1,60 µm R_a depending on service conditions and required sealing efficiency.

Fig 3

The cross section position for a non-reinforced wiper seal has the tendency to be distorted, which results in reduced wiping efficiency

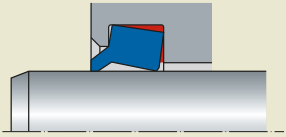

Fig 4

Wiper seal type PWB with an axial static sealing edge on the front and axial ridges on the inside diameter

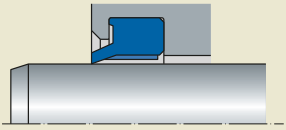

Fig 5

Wiper seal typ PWY with radially outwards directed sealing lip to provide increased static sealing ability

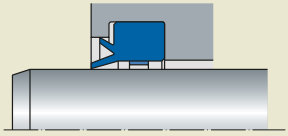

rgab.ru Берг АБ bergab@ya.ru Тел. (495)-228-06-21, факс (495) 2

rgab.ru Берг АБ bergab@ya.ru Тел. (495)-228-06-21, факс (495) 2

Double-acting wiper seals

In some applications, the instructions or conditions require the use of double-acting wiper seals. This is the case in medium or heavy duty applications such as in hydraulic cylinders for construction equipments or when, in order to achieve low friction, a rod seal type providing too high an oil transport has to be chosen. Most of the oil transport passing the rod seal is gathered in front of the wiper seal and returns into the system with the rod through the rod seal at the return stroke.

In applications with light duty service conditions double-acting wiper seals type SDR of nitrile rubber can be used and at light or medium duty service conditions a double-acting wiper seal type PWD of polyurethane is suggested. See **fig 6** and **7**.

In order to achieve optimal function at medium or heavy duty service conditions, such as in construction equipment applications with intense and long-term activities, metal reinforced double-acting wiper seals are required. Double-acting wiper seals type SCB of nitrile rubber can be used at medium duty service conditions, but at heavy duty service conditions we suggest wiper seals type PAD of polyurethane, see **fig 8**.

At extremely heavy duty service conditions with intense and long-term stroke changes resulting in pressure being trapped between wiper and rod seal, a metal reinforced double-acting wiper seal should be used and be fixed with a retainer ring, which is specifically designed to fit the double-acting wiper seal types SCB and PAD, see **fig 8** and **9**. The retainer ring can be included in the delivery at request.

4

Fig **6**

Double-acting wiper seal type SDR

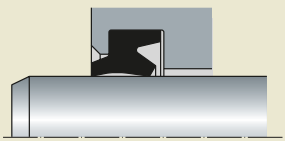

Fig **7**

Double-acting wiper seal type PWD

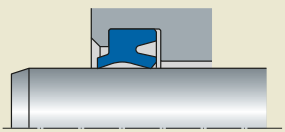

Fig **8**

Double-acting wiper seal type PAD

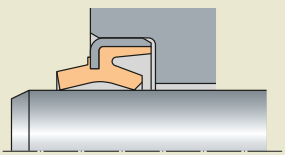

Fig **9**

Double-acting wiper seal type SCB with retainer ring type SP

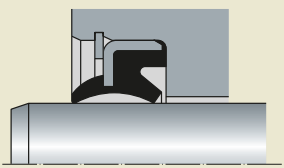

rgab.ru Берг АБ bergab@ya.ru Тел. (495)-228-06-21, факс (495) 2

rgab.ru Берг АБ bergab@ya.ru Тел. (495)-228-06-21, факс (495) 2

Aggressive media

Applications with aggressive fluids, high temperatures or specific demands for low friction, a wiper seal of PTFE, e.g. type PO2, should be chosen, see **fig 10**. An O-ring provides the static sealing in the housing and the necessary sealing force.

Wiper seals of PTFE are machined and therefore independent of moulding tools. O-rings of standard sizes are used as rubber spring elements.

Therefore, this type of wiper seal is appropriate for specifically aggressive fluids, high temperatures and demands for small quantities. PTFE wipers are also convenient to use when renovating old components since they very easily can be made to fit existing housing dimensions.

Piston wiper seals

Single-acting cylinders with a port open to the atmosphere to provide the equalizing of the air pressure are often used in applications where contamination particles can reach the interior of the cylinder through the opening. Plunge cylinders for farming machines and swing cylinders on lorry cranes for forestry and cargo handling are examples on such applications. The usage is periodic and a full stroke length is used at irregular intervals or in some cases seldom. Therefore, accumulations of contamination particles in concentrated areas in the cylinder tube often cause problems.

Type PPUA is an alternative wiper seal type to be used on pistons to solve this type of problem. Type PPUA of polyurethane consisting of a slotted slide ring of Acetal resin and an O-ring as a rubber spring element is used with good results since several years, see **fig 11**.

Seal materials

The usual way of judging seal materials for hydraulic applications is to read the material specifications and try to compare the specifications for various materials. This unfortunately leads to several pitfalls. Most specifications and test results can seldom be compared with one another if they have not been carried out in the same way and under the same conditions.

Many test results reproduce values based on test samples produced with standardized forms and sizes. Some properties can then show better values than could be expected from tests with seals from serial production. In particular, this is the case with seals with small cross sections, when e.g. the compression set shows high values. To avoid drawing the wrong conclusions, it is essential that comparisons are based on correct assumptions.

Because of costs and time pressure, test results often show values which have been recorded following short test periods, e.g. 24 or 72 hours. These provide only a very limited amount of information about the properties of the material. Experience has shown that only results from long test periods, normally 1 000 hours, provide reliable bases for comparisons.

The properties which initially should be studied are those most important for the sealing function. We consider the following properties to be the most important:

- compression set,
- elasticity at low temperature, e.g. TR 10-value (retraction test),
- change of hardness in oil, and
- change of volume in oil.

It is naturally not just the material's properties that determine the function of the seal. The design of the seal is just as important, i.e. how the properties of the material can be optimally used for the task which the seal in question has to carry out.

Fig **10**

Wiper seal type PO2 of PTFE with an O-ring as energizer

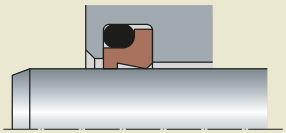

Fig **11**

Wiper seal type PPUA to be used on pistons

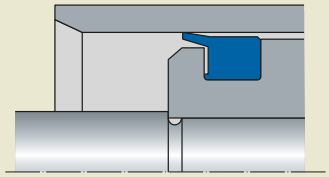

rgab.ru Берг АБ bergab@ya.ru Тел. (495)-228-06-21, факс (495) 2

rgab.ru Берг АБ bergab@ya.ru Тел. (495)-228-06-21, факс (495) 2

Test results

Tests have been carried through to study the ability of different types of wiper seals to stop or to minimize the amount of contamination particles to pass the wiper seal into a cylinder. The tested wiper seals were type PA of polyurethane (1) and SEALPOOL type GA of nitrile rubber (4), a metal reinforced single-acting wiper seal from Japan (3) and a non-reinforced double-acting wiper seal from the USA (2). The figures in brackets refer to **Diagram 2**.

A maximum of 10 000 particles of the size 10 to 20 µm were allowed to have passed the wiper seal into a certain amount of oil after 500 000 stroke cycles with a stroke length of 2 × 50 mm (one way) and a frequency of 60 cycles/min. The rod diameter was 50 mm. The SEALPOOL type PA was the only wiper seal that passed the test.

Please contact us for complementary information on this test or comparative tests with double-acting and single-acting wiper seals.

Operating temperature

Stating the highest and lowest operating temperatures for a wiper seal of a particular type of material or, in some cases, combination of materials is very complicated. A number of factors affect each other. The graphic composition provides general guidance regarding the operating temperature ranges for different types of regular design wiper seals, and under otherwise normal operating conditions, see **Diagram 3**.

During normal use and installation, the respective materials provide satisfactory results within the temperature ranges shown in each column.

Problems could begin to arise within the marked areas. Other materials should be chosen for use beyond these limits. Please contact us for further information.

4

Diagram 2

Test result with various types of seals

Diagram 3

Service temperature ranges for various wiper seal types of different materials.

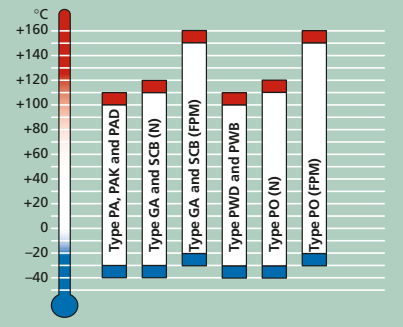

rgab.ru Берг АБ bergab@ya.ru Тел. (495)-228-06-21, факс (495) 2

rgab.ru Берг АБ bergab@ya.ru Тел. (495)-228-06-21, факс (495) 2

Module system

A new generation of hydraulic cylinders should be designed so that the components to be installed into the cylinder can be produced in long series. Therefore it is important with a basic construction, considering the seal housing groove design as well. This provides the possibility to use a module system of seals for different requirements.

The basic construction is supposed to function in most applications and environments with a minimum of adaptations. This means for example that the seal housing sizes for wiper seals, rod seals, piston seals, guiding rings and static seals can be kept, also if different applications require different designs and materials.

You will find the module system already in use in the dimension tables in this catalogue. If you all the same would not find a suitable solution for a basic housing, please contact us. New sizes are continuously added.

All our development work aims at solutions designed to be in accordance with the ISO standards for seal housing sizes which, if possible, always should be used in new constructions.

Assembly

The way of assembling the wiper seals effects their function, especially the function of the metal reinforced wipers which are fixed through press fit into open housings with the diameter tolerance H8. The wiper metal case outside diameter tolerances are therefore made in accordance with those used for rotary shaft lip seals, see ISO 6194-1, table 5 – metal cased seals.

The assembly tool should be designed with a larger outside diameter than that of the wiper seal so that the press force ceases when the wiper reaches its correct position in the housing. If not, the metal case can be damaged and the wiper seal function is impaired, see **fig 12**. The housing should be designed in accordance with ISO 6195 with a lead-in chamfer of 0,7 to 1,0 mm and a fillet radius of maximum 0,8 mm. This, however, reduces the width of the housing surface providing the fixation through the press fit. Our wiper seal types PA and GA have their steel cases designed in special consideration of this fact.

It is also very important to ensure that the axial depth of the housing is slightly greater (+0,5 mm) than the width of the wiper seal metal case to avoid that the wiper is forced against the base of the housing and thereby axially deformed.

Groove edges

All groove edges are smoothed and rounded off to R = 0,1 to 0,2 mm.

Fig **12**

The outside diameter of the assembly tool must be larger than the housing diameter to avoid deformation of the wiper at assembly

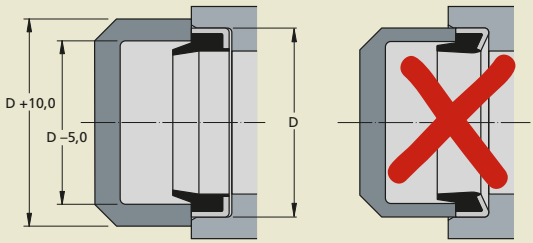

rgab.ru Берг АБ bergab@ya.ru Тел. (495)-228-06-21, факс (495) 2

rgab.ru Берг АБ bergab@ya.ru Тел. (495)-228-06-21, факс (495) 2

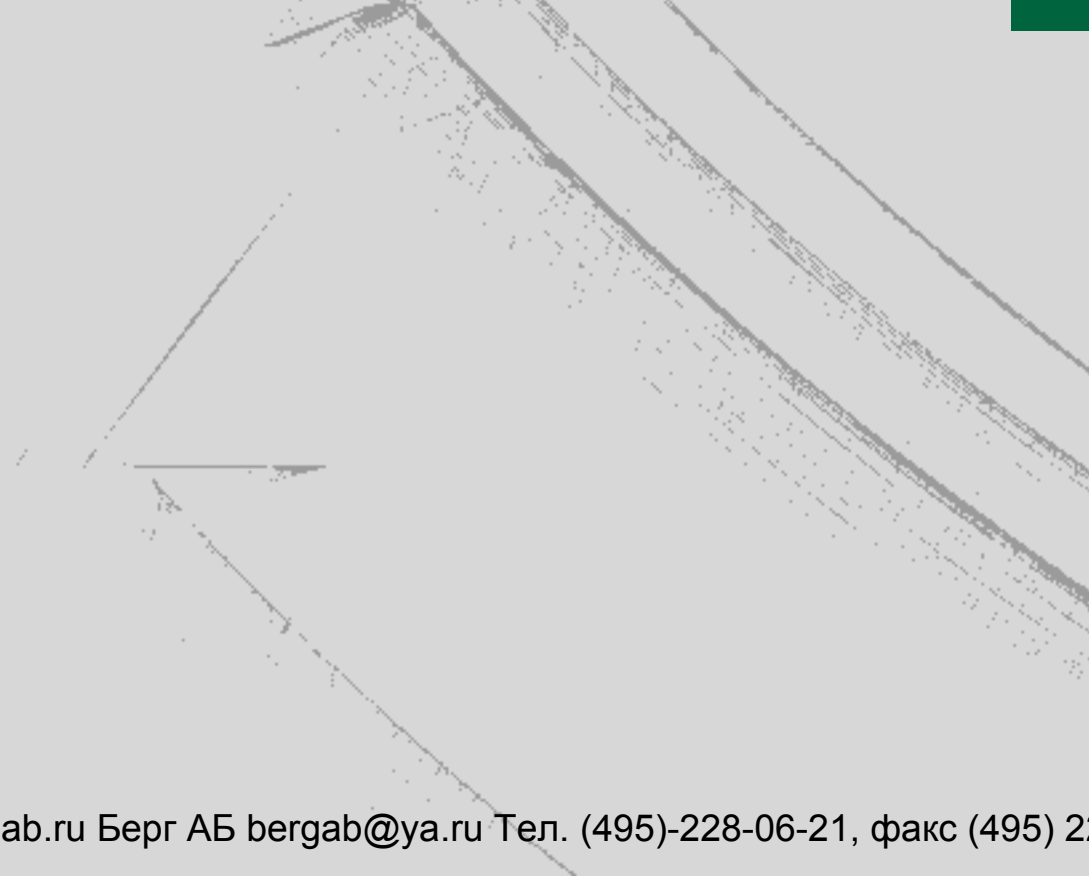

rgab.ru Берг АБ bergab@ya.ru Тел. (495)-228-06-21, факс (495) 2

rgab.ru Берг АБ bergab@ya.ru Тел. (495)-228-06-21, факс (495) 2

Surface properties

A surface is usually defined by the surface roughness value µm R_a, i.e. the arithmetic mean deviation of the surface profile. This value does not, however, provide a complete scenario of how the surface can be expected to affect the seal. The reason for this is that two surfaces with the same value stated in µm R_a but with different surface profile characteristics can result in a varying degree of wear.

A surface with smooth profile characteristics provides a longer service life for the seal than a rough surface characterized by sharp profile details, but still with the same surface roughness value. A more important aspect is therefore the surface profile characteristics, or bearing capacity. The higher bearing capacity, the longer service life of the seal. **Table 1** shows the relation between different surface roughness values and the bearing capacity.

We recommend a surface roughness value for rod and cylinder tube surfaces working against seals of elastomeric materials of maximum 0,3 µm R_a and maximum 0,2 µm R_a surfaces working against PTFE seals. In this recommendation the bearing capacity is taken into consideration and is described as a relation between R_p and R_z according to the below formula:

For surfaces against seals of elastomeric materials:

0,3 ▽ R_z 1,2/$R_{p\,max}$ 45% of R_z

For surfaces against PTFE seals:

0,2 ▽ R_z 1,2/$R_{p\,max}$ 45% of R_z

We recommend a surface roughness value for the seal housing groove of maximum 0,8 µm R_a and maximum 1,6 µm R_a for other machined surfaces.

rgab.ru Берг АБ bergab@ya.ru Тел. (495)-228-06-21, факс (495) 2

rgab.ru Берг АБ bergab@ya.ru Тел. (495)-228-06-21, факс (495) 2

Table **1**

Surface properties

Surface profile	Pt	$R_{z\,max}$	R_z	R_a	R_p	Mr 1 C 0,25	Mr 2 C 0,25	Bearing capacity graph (Abbott Graph)
	–	–	–	µm	–	–	–	
	1	1	1	0,25	0,2	75 %	75 %	
	1	1	1	0,25	0,8	15 %	15 %	
	1	1	1	0,2	0,2	85 %	85 %	
	1	1	1	0,2	0,8	20 %	20 %	
	1	1	0,4	0,08	0,15	88 %	88 %	
	1	1	0,4	0,08	0,85	7 %	7 %	
	1	1	1	0,2	0,5	25 %	25 %	
	1	1	1	0,3	0,3	38 %	38 %	
	1	0,5	0,4	0,1	0,2	85 %	17 %	

4

rgab.ru Берг АБ bergab@ya.ru Тел. (495)-228-06-21, факс (495) 2

rgab.ru Берг АБ bergab@ya.ru Тел. (495)-228-06-21, факс (495) 2

Assembly into open housings

Our programme on wiper seals for press fit assembly into open housings is very extensive regarding the number of wiper types as well as material combinations, see **fig 13**.

Figure 5 in **Matrix 1** represents the most appropriate design and figure 1 the least appropriate. Please select your most important decisive factors when choosing wiper seal design and installation and mark possible solutions. Then study further factors, installation instructions and dimension tables.

The housing groove dimensions (or wiper seal sizes) should be selected in order to allow wiper seals of different material combinations to be used at varying service conditions for cylinders of the same design.

Please feel welcome to contact us for further information.

Fig 13

Assembly into open housing

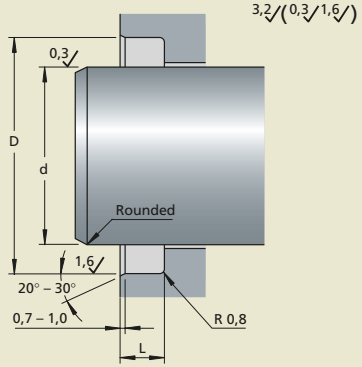

Wiper seals					
Type/series	**PA**	**PAK**	**PAD**	**GA**	**SCB**
Material (with metal reinforcement)	PU	PU	PU	N	N FPM
Page	**174**	**175**	**177**	**178**	**180**
High temperature > +110 °C	4	4	4	4	4
Low temperature < –30 °C	5	5	5	4	4
Friction	3	4	3	4	4
Surface sensitivity	5	5	5	3	3
Tolerance sensitivity	4	4	4	4	4
Service life	5	5	5	3	3
Assembly	5	5	5	5	5
Fixation in the housing	5	5	5	4	5
Cost of installation	5	5	5	5	5
Wiping ability	5	4	5	3	4
Static sealing in the housing	5	5	5	5	5
Preferred in new designs	X	X	X	X	

rgab.ru Берг АБ bergab@ya.ru Тел. (495)-228-06-21, факс (495) 2

rgab.ru Берг АБ bergab@ya.ru Тел. (495)-228-06-21, факс (495) 2

Assembly into closed housings

Our programme on wiper seals for assembly into closed housings is very extensive regarding the number of wiper types as well as material combinations, see **fig 14**.

Figure 5 in **Matrix 1** represents the most appropriate design and figure 1 the least appropriate. Please select your most important decisive factors when choosing wiper seal design and installation and mark possible solutions. Then study further factors, installation instructions and dimension tables.

The housing groove dimensions (or wiper seal sizes) should be selected in order to allow wiper seals of different material combinations to be used at varying service conditions for cylinders of the same design.

Fig 14

Assembly into closed housing

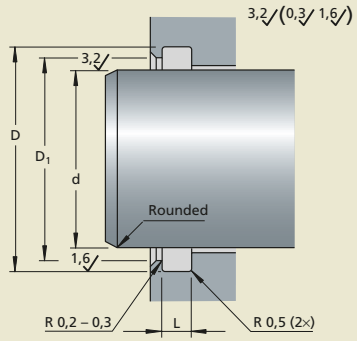

4

Matrix 1

PWY	PWD	PWB	RSW	PO2	PO	SDR	SER	PW	DK	PPUA	PWF
PU	PU	PU	PU	PTFE N	PTFE N	N	N	PU	PU	PU	PU
184	**186**	**188**	**189**	**190**	**190**	**194**	**198**	**202**	**206**	**207**	**208**
4	4	4	3	5	5	4	4	3	4	3	3
5	5	5	4	3	3	4	4	3	2	3	3
4	4	4	4	5	5	4	5	4	5	4	4
5	5	5	4	3	3	4	4	4	3	4	4
4	4	4	4	3	3	4	4	3	2	3	3
4	4	4	4	2	2	4	4	4	2	4	4
4	4	4	4	3	3	4	4	4	4	4	4
4	4	4	3	4	4	4	4	4	4	4	3
4	3	3	3	3	3	3	3	3	3	3	3
4	4	4	4	4	3	3	3	3	2	3	4
5	5	4	4	3	4	3	3	2	1	2	3
X	X	X		X							

rgab.ru Берг АБ bergab@ya.ru Тел. (495)-228-06-21, факс (495) 2

rgab.ru Берг АБ bergab@ya.ru Тел. (495)-228-06-21, факс (495) 2

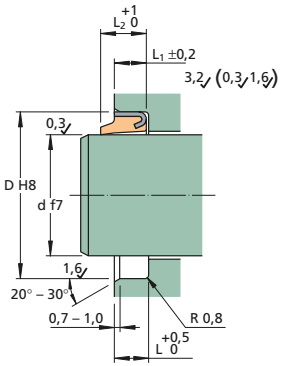

Type PA
Wiper seal of polyurethane with steel case for press fit assembly.

Dimensions d	D	L	L_1	L_2	Designation	ISO 6195-B
mm					–	
12	20	4,5	4	6	**CR PA 12×20×4×6**	
20	30	7,5	7	10	**CR PA 20×30×7×10**	•
25	35	7,5	7	10	**CR PA 25×35×7×10**	•
28	38	7,5	7	10	**CR PA 28×38×7×10**	•
30	40	7,5	7	10	**CR PA 30×40×7×10**	
32	42	7,5	7	10	**CR PA 32×42×7×10**	•
	45	7,5	7	10	**CR PA 32×45×7×10**	
35	45	7,5	7	10	**CR PA 35×45×7×10**	
36	45	7,5	7	10	**CR PA 36×45×7×10**	
	46	7,5	7	10	**CR PA 36×46×7×10**	•
40	50	7,5	7	10	**CR PA 40×50×7×10**	•
45	55	7,5	7	10	**CR PA 45×55×7×10**	•
	60	7,5	7	10	**CR PA 45×60×7×10**	
50	60	7,5	7	10	**CR PA 50×60×7×10**	•
	65	7,5	7	10	**CR PA 50×65×7×10**	
55	70	7,5	7	10	**CR PA 55×70×7×10**	
56	66	7,5	7	10	**CR PA 56×66×7×10**	•
60	70	7,5	7	10	**CR PA 60×70×7×10**	
63	73	7,5	7	10	**CR PA 63×73×7×10**	•
	75	7,5	7	10	**CR PA 63×75×7×10**	
	78	7,5	7	10	**CR PA 63×78×7×10**	
65	75	7,5	7	10	**CR PA 65×75×7×10**	
70	80	7,5	7	10	**CR PA 70×80×7×10**	•
75	85	7,5	7	10	**CR PA 75×85×7×10**	

Dimensions d	D	L	L_1	L_2	Designation	ISO 6195-B
mm					–	
80	90	7,5	7	10	**CR PA 80×90×7×10**	•
85	95	7,5	7	10	**CR PA 85×95×7×10**	
90	100	7,5	7	10	**CR PA 90×100×7×10**	•
100	110	7,5	7	10	**CR PA 100×110×7×10**	
105	115	7,5	7	10	**CR PA 105×115×7×10**	
110	120	7,5	7	10	**CR PA 110×120×7×10**	
115	125	7,5	7	10	**CR PA 115×125×7×10**	
120	130	7,5	7	10	**CR PA 120×130×7×10**	
125	140	9,5	9	12	**CR PA 125×140×9×12**	•
140	155	9,5	9	12	**CR PA 140×155×9×12**	•
180	195	9,5	9	12	**CR PA 180×195×9×12**	•

rgab.ru Берг АБ bergab@ya.ru Тел. (495)-228-06-21, факс (495) 2

rgab.ru Берг АБ bergab@ya.ru Тел. (495)-228-06-21, факс (495) 2

Type PAK
Wiper seal of polyurethane with steel case for press fit assembly.

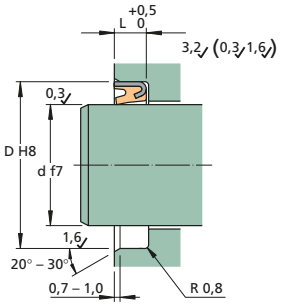

Dimensions				Designation	ISO 6195-B
d	D	L	L_1		
mm				–	
12	20	4,5	4	**CR PAK 12×20×4**	
15	21	5,5	5	**CR PAK 15×21×5**	
15,9	23	5,5	5	**CR PAK 15.9×23×5**	
20	28	5,5	5	**CR PAK 20×28×5**	
25	32	7,5	7	**CR PAK 25×32×7**	
36	46	7,5	7	**CR PAK 36×46×7**	•
50	60	7,5	7	**CR PAK 50×60×7**	•
65	75	7,5	7	**CR PAK 65×75×7**	

rgab.ru Берг АБ bergab@ya.ru Тел. (495)-228-06-21, факс (495) 2

rgab.ru Берг АБ bergab@ya.ru Тел. (495)-228-06-21, факс (495) 2

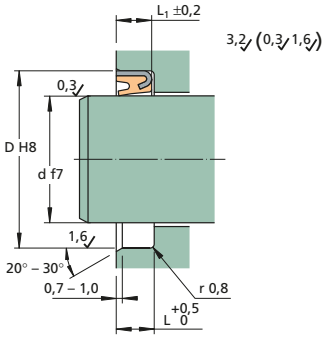

Type PAK .. L
Wiper seal of polyurethane with steel case for press fit assembly. Designed with a thin lip to be used as a link bearing seal. This design is less appropriate for rod wiping applications.

Dimensions				Designation
d	D	L	L_1	
mm				–
30	40	5	4,5	**CR PAK 30×40×4.5 -L**
35	45	5	4,5	**CR PAK 35×45×4.5 -L**
40	50	5	4,5	**CR PAK 40×50×4.5 -L**
45	55	5,5	5	**CR PAK 45×55×5 -L**
50	60	7,5	7	**CR PAK 50×60×7 -L**
60	70	7,5	7	**CR PAK 60×70×7 -L**
65	75	7,5	7	**CR PAK 65×75×7 -L**
70	80	5	4,5	**CR PAK 70×80×4.5 -L**
	80	7,5	7	**CR PAK 70×80×7 -L**
75	90	5	4,5	**CR PAK 75×90×4.5 -L**
80	90	5	4,5	**CR PAK 80×90×4.5 -L**
	90	7,5	7	**CR PAK 80×90×7 -L**
	95	6,5	6	**CR PAK 80×95×6 -L**
	95	7,5	7	**CR PAK 80×95×7 -L**
85	95	7,5	7	**CR PAK 85×95×7 -L**
	100	6,5	6	**CR PAK 85×100×6 -L**
90	100	5	4,5	**CR PAK 90×100×4.5 -L**
	100	7,5	7	**CR PAK 90×100×7 -L**
	105	6,5	6	**CR PAK 90×105×6 -L**
100	110	5	4,5	**CR PAK 100×110×4.5 -L**
	110	7,5	7	**CR PAK 100×110×7 -L**
110	120	7,5	7	**CR PAK 110×120×7 -L**
	125	7,5	7	**CR PAK 110×125×7 -L**
120	130	7,5	7	**CR PAK 120×130×7 -L**
130	140	7,5	7	**CR PAK 130×140×7 -L**

Dimensions				Designation
d	D	L	L_1	
mm				–
140	155	7,5	7	**CR PAK 140×155×7 -L**
	155	9,5	9	**CR PAK 140×155×9 -L**
150	160	7,5	7	**CR PAK 150×160×7 -L**
170	185	7,5	7	**CR PAK 170×185×7 -L**
190	205	7,5	7	**CR PAK 190×205×7-L**

rgab.ru Берг АБ bergab@ya.ru Тел. (495)-228-06-21, факс (495) 2

rgab.ru Берг АБ bergab@ya.ru Тел. (495)-228-06-21, факс (495) 2

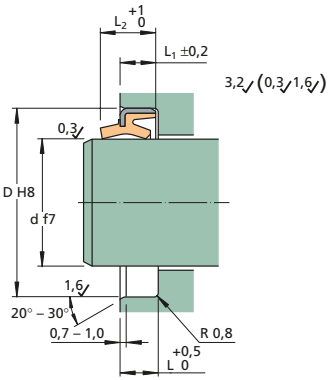

Type PAD
Double-acting wiper seal of polyurethane with steel case for press fit assembly. A retainer ring providing safer fixation when pressure is trapped can be included at delivery, see type SCB.

Dimensions					Designation
d	D	L	L_1	L_2	
mm					–
35	47	7,5	7	10	**CR PAD 35×47×7×10**
40	52	7,5	7	10	**CR PAD 40×52×7×10**
45	57	7,5	7	10	**CR PAD 45×57×7×10**
50	62	7,5	7	10	**CR PAD 50×62×7×10**
55	69	8,5	8	11	**CR PAD 55×69×8×11**

rgab.ru Берг АБ bergab@ya.ru Тел. (495)-228-06-21, факс (495) 2

rgab.ru Берг АБ bergab@ya.ru Тел. (495)-228-06-21, факс (495) 2

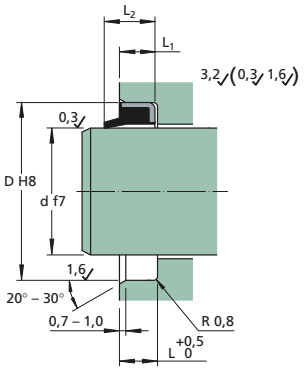

Type GA
Wiper seal of nitrile rubber with steel case for press fit assembly. Type GA can also be manufactured of fluorocarbon rubber at request.

Dimensions d	D	L	L_1	L_2	Designation	ISO 6195-B
mm					–	
10	16	3,5	3	4,5	**GA 10×16×3×4.5**	
	20	5,5	5	8	**GA 10×20×5×8**	
12	20	4,5	4	6	**GA 12×20×4×6**	
	22	5,5	5	8	**GA 12×22×5×8**	
14	20	4	3,5	5	**GA 14×20×3.5×5**	
	22	3,5	3	4	**GA 14×22×3×4**	
15	25	5,5	5	8	**GA 15×25×5×8**	
	25	7,5	7	10	**GA 15×25×7×10**	
16	22	3,5	3	4	**GA 16×22×3×4**	
	24	3,5	3	4	**GA 16×24×3×4**	
	26	5,5	5	8	**GA 16×26×5×8**	
18	28	7,5	7	10	**GA 18×28×7×10**	•
20	26	5,5	5	8	**GA 20×26×5×8**	
	28	4	3,5	5	**GA 20×28×3.5×5**	
	28	5,5	5	8	**GA 20×28×5×8**	
	30	4,5	4	6	**GA 20×30×4×6**	
	30	5,5	5	8	**GA 20×30×5×8**	
	30	7,5	7	10	**GA 20×30×7×10**	•
	35	7,5	7	10	**GA 20×35×7×10**	
21	28	4	3,5	5	**GA 21×28×3.5×5**	
22	28	5,5	5	9	**GA 22×28×5×9**	
	32	7,5	7	10	**GA 22×32×7×10**	•
	35	5,5	5	8	**GA 22×35×5×8**	
24	35	7,5	7	10	**GA 24×35×7×10**	
25	35	5,5	5	8	**GA 25×35×5×8**	
	35	7,5	7	10	**GA 25×35×7×10**	•
26	34	5,5	5	8	**GA 26×34×5×8**	
28	38	5,5	5	8	**GA 28×38×5×8**	
	38	7,5	7	10	**GA 28×38×7×10**	•
	40	7,5	7	10	**GA 28×40×7×10**	

Dimensions d	D	L	L_1	L_2	Designation	ISO 6195-B
mm					–	
30	40	5,5	5	8	**GA 30×40×5×8**	
	40	7,5	7	10	**GA 30×40×7×10**	
32	40	4,5	4	7	**GA 32×40×4×7**	
	40	7,5	7	10	**GA 32×40×7×10**	
	42	5,5	5	7	**GA 32×42×5×7**	
	42	7,5	7	10	**GA 32×42×7×10**	•
	45	5,5	5	7	**GA 32×45×5×7**	
	45	7,5	7	10	**GA 32×45×7×10**	
33	43	7,5	7	10	**GA 33×43×7×10**	
35	45	5,5	5	8	**GA 35×45×5×8**	
	45	7,5	7	10	**GA 35×45×7×10**	
	52	7,5	7	10	**GA 35×52×7×10**	
36	45	7,5	7	10	**GA 36×45×7×10**	
38	48	7,5	7	10	**GA 38×48×7×10**	
40	50	4	3,5	5	**GA 40×50×3.5×5**	
	50	5,5	5	8	**GA 40×50×5×8**	
	50	7,5	7	10	**GA 40×50×7×10**	•
	52	5,5	5	8	**GA 40×52×5×8**	
42	52	7,5	7	10	**GA 42×52×7×10**	
45	55	7,5	7	10	**GA 45×55×7×10**	•
	60	5,5	5	7	**GA 45×60×5×7**	
	60	7,5	7	10	**GA 45×60×7×10**	
48	60	7,5	7	10	**GA 48×60×7×10**	
50	56	5,5	5	8	**GA 50×56×5×8**	
	60	5,5	5	7	**GA 50×60×5×7**	
	60	7,5	7	10	**GA 50×60×7×10**	•
	65	7,5	7	10	**GA 50×65×7×10**	
55	63	7,5	7	10	**GA 55×63×7×10**	
	65	7,5	7	10	**GA 55×65×7×10**	

rgab.ru Берг АБ bergab@ya.ru Тел. (495)-228-06-21, факс (495) 2

rgab.ru Берг АБ bergab@ya.ru Тел. (495)-228-06-21, факс (495) 2

Dimensions d	D	L	L_1	L_2	Designation	ISO 6195-B
mm					–	
56	65	7,5	7	10	**GA 56×65×7×10**	
	66	7,5	7	10	**GA 56×66×7×10**	•
60	70	7,5	7	10	**GA 60×70×7×10**	
	74	5,5	5	8	**GA 60×74×5×8**	
	75	7,5	7	10	**GA 60×75×7×10**	
	80	7,5	7	10	**GA 60×80×7×10**	
63	73	7,5	7	10	**GA 63×73×7×10**	•
	75	7,5	7	10	**GA 63×75×7×10**	
65	75	7,5	7	10	**GA 65×75×7×10**	
70	80	7,5	7	10	**GA 70×80×7×10**	•
75	85	7,5	7	10	**GA 75×85×7×10**	
	87	5,5	5	7	**GA 75×87×5×7**	
78	88	7,5	7	10	**GA 78×88×7×10**	
80	90	7,5	7	10	**GA 80×90×7×10**	•
85	95	7,5	7	10	**GA 85×95×7×10**	
90	100	7,5	7	10	**GA 90×100×7×10**	•
95	105	7,5	7	10	**GA 95×105×7×10**	
100	110	7,5	7	10	**GA 100×110×7×10**	
105	115	7,5	7	10	**GA 105×115×7×10**	
110	120	7,5	7	10	**GA 110×120×7×10**	
115	125	7,5	7	10	**GA 115×125×7×10**	
120	130	7,5	7	10	**GA 120×130×7×10**	
125	140	9,5	9	12	**GA 125×140×9×12**	•
	135	7,5	7	10	**GA 125×135×7×10**	
130	145	9,5	9	12	**GA 130×145×9×12**	

Dimensions d	D	L	L_1	L_2	Designation	ISO 6195-B
mm					–	
135	145	7,5	7	10	**GA 135×145×7×10**	
	150	9,5	9	12	**GA 135×150×9×12**	
140	155	9,5	9	12	**GA 140×155×9×12**	•
145	160	9,5	9	12	**GA 145×160×9×12**	
150	165	9,5	9	12	**GA 150×165×9×12**	
160	175	9,5	9	12	**GA 160×175×9×12**	•
163	175	7,5	7	10	**GA 163×175×7×10**	
170	185	9,5	9	12	**GA 170×185×9×12**	
180	195	10,5	10	14	**GA 180×195×10×14**	
185	200	10,5	10	14	**GA 185×200×10×14**	
200	220	12,5	12	16	**GA 200×220×12×16**	
210	230	12,5	12	16	**GA 210×230×12×16**	
220	240	9,5	9	12	**GA 220×240×9×12**	
	240	12,5	12	16	**GA 220×240×12×16**	•
240	260	12,5	12	16	**GA 240×260×12×16**	
250	270	12,5	12	16	**GA 250×270×12×16**	•
280	300	12,5	12	16	**GA 280×300×12×16**	•
320	340	12,5	12	16	**GA 320×340×12×16**	•
360	380	12,5	12	16	**GA 360×380×12×16**	•
400	420	12,5	12	16	**GA 400×420×12×16**	

rgab.ru Берг АБ bergab@ya.ru Тел. (495)-228-06-21, факс (495) 2

rgab.ru Берг АБ bergab@ya.ru Тел. (495)-228-06-21, факс (495) 2

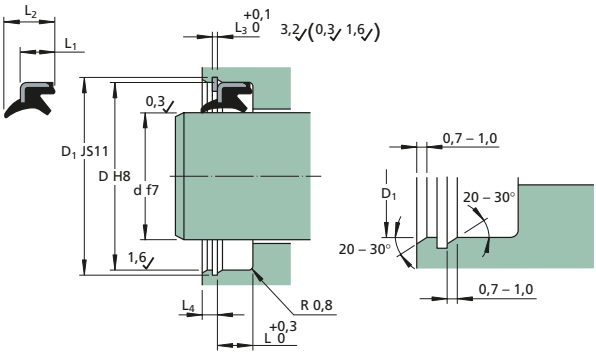

Type SCB
Double-acting wiper seal of nitrile rubber with steel case for press fit assembly. A retainer ring providing safer fixation when pressure is trapped can be included at delivery.
Type SCB can also be manufactured of fluoro-carbon rubber at request.

Dimensions								Designation
d	D	L	L_1	L_2	L_3	L_4	D_1	
mm							–	
8	18	5	5	8	0,7	3	18,8	**CR SCB 8×18×5×8**
10	20	5	5	8	0,7	3	21	**CR SCB 10×20×5×8**
12	22	5	5	8	0,7	3	23	**CR SCB 12×22×5×8**
12,5	23	5	5	8	0,7	3	24	**CR SCB 12.5×23×5×8**
14	24	5	5	8	0,7	3	25	**CR SCB 14×24×5×8**
15	25	5	5	8	0,7	3	26	**CR SCB 15×25×5×8**
16	26	5	5	8	0,7	3	27	**CR SCB 16×26×5×8**
18	30	6	6	9	0,8	3	31,5	**CR SCB 18×30×6×9**
20	32	6	6	9	0,8	3	33,5	**CR SCB 20×32×6×9**
22	34	6	6	9	0,8	3	35,5	**CR SCB 22×34×6×9**
22,4	34,4	6	6	9	0,8	3	35,9	**CR SCB 22.4×34.4×6×9**
25	37	6	6	9	0,8	3	38,5	**CR SCB 25×37×6×9**
28	40	6	6	9	0,8	3	41,5	**CR SCB 28×40×6×9**
30	42	6	6	9	0,8	3	43,5	**CR SCB 30×42×6×9**
31,5	44	7	7	10	0,8	3	45,5	**CR SCB 31.5×44×7×10**
32	44	7	7	10	0,8	3	45,5	**CR SCB 32×44×7×10**
35	47	7	7	10	1	3	49	**CR SCB 35×47×7×10**
35,5	47,5	7	7	10	1	3	49,5	**CR SCB 35.5×47.5×7×10**
36	48	7	7	10	1	3	50	**CR SCB 36×48×7×10**
40	52	7	7	10	1	3	54	**CR SCB 40×52×7×10**
45	57	7	7	10	1	3	59	**CR SCB 45×57×7×10**

rgab.ru Берг АБ bergab@ya.ru Тел. (495)-228-06-21, факс (495) 2

rgab.ru Берг АБ bergab@ya.ru Тел. (495)-228-06-21, факс (495) 2

Dimensions								Designation
d	D	L	L_1	L_2	L_3	L_4	D_1	
mm							–	
50	62	7	7	10	1	3	64	**CR SCB 50×62×7×10**
55	69	8	8	11	1,1	4	71,5	**CR SCB 55×69×8×11**
56	70	8	8	11	1,1	4	72,5	**CR SCB 56×70×8×11**
60	74	8	8	11	1,1	4	76,5	**CR SCB 60×74×8×11**
63	77	8	8	11	1,1	4	79,5	**CR SCB 63×77×8×11**
65	79	8	8	11	1,1	4	81,5	**CR SCB 65×79×8×11**
70	84	8	8	11	1,1	4	86,5	**CR SCB 70×84×8×11**
71	85	8	8	11	1,1	4	87,5	**CR SCB 71×85×8×11**
75	89	8	8	11	1,1	4	91,5	**CR SCB 75×89×8×11**
80	94	8	8	11	1,1	4	96,5	**CR SCB 80×94×8×11**
85	99	8	8	11	1,1	4	101,5	**CR SCB 85×99×8×11**
90	104	8	8	11	1,1	4	106,5	**CR SCB 90×104×8×11**
95	109	8	8	11	1,1	4	111,5	**CR SCB 95×109×8×11**
100	114	8	8	11	1,1	4	116,5	**CR SCB 100×114×8×11**
105	121	9	9	12	1,3	5	125	**CR SCB 105×121×9×12**
110	126	9	9	12	1,3	5	130	**CR SCB 110×126×9×12**
115	131	9	9	12	1,3	5	135	**CR SCB 115×131×9×12**
120	136	9	9	12	1,3	5	140	**CR SCB 120×136×9×12**
125	141	9	9	12	1,3	5	145	**CR SCB 125×141×9×12**
130	146	9	9	12	1,3	5	150	**CR SCB 130×146×9×12**
132	148	9	9	12	1,3	5	152	**CR SCB 132×148×9×12**

rgab.ru Берг АБ bergab@ya.ru Тел. (495)-228-06-21, факс (495) 2

rgab.ru Берг АБ bergab@ya.ru Тел. (495)-228-06-21, факс (495) 2

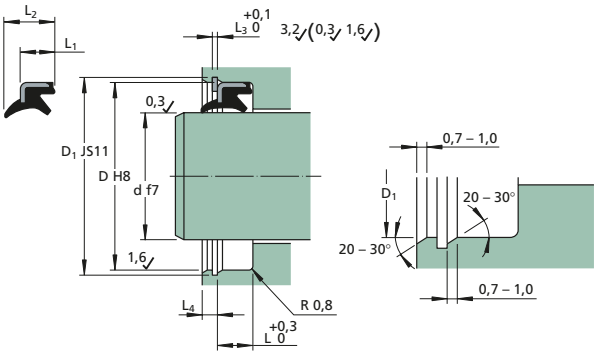

Type SCB
Double-acting wiper seal of nitrile rubber with steel case for press fit assembly. A retainer ring providing safer fixation when pressure is trapped can be included at delivery.

Type SCB can also be manufactured of fluoro-carbon rubber at request.

Dimensions								Designation
d	D	L	L_1	L_2	L_3	L_4	D_1	
mm							–	
135	155	10	10	14	1,3	5	159	**CR SCB 135×155×10×14**
140	160	10	10	14	1,3	5	164	**CR SCB 140×160×10×14**
145	165	10	10	14	1,3	5	169	**CR SCB 145×165×10×14**
150	170	10	10	14	1,3	6	174	**CR SCB 150×170×10×14**
160	180	10	10	14	1,3	6	184	**CR SCB 160×180×10×14**
170	190	10	10	14	1,3	6	194	**CR SCB 170×190×10×14**
175	195	10	10	14	1,3	6	199	**CR SCB 175×195×10×14**
180	200	10	10	14	1,3	6	204	**CR SCB 180×200×10×14**
190	215	12	12	16	1,6	6	219,5	**CR SCB 190×215×12×16**
200	225	12	12	16	1,6	6	229,5	**CR SCB 200×225×12×16**
250	274	12	12	16	1,6	6	278,5	**CR SCB 250×274×12×16**

rgab.ru Берг АБ bergab@ya.ru Тел. (495)-228-06-21, факс (495) 2

rgab.ru Берг АБ bergab@ya.ru Тел. (495)-228-06-21, факс (495) 22

rgab.ru Берг АБ bergab@ya.ru Тел. (495)-228-06-21, факс (495) 22

rgab.ru Берг АБ bergab@ya.ru Тел. (495)-228-06-21, факс (495) 22

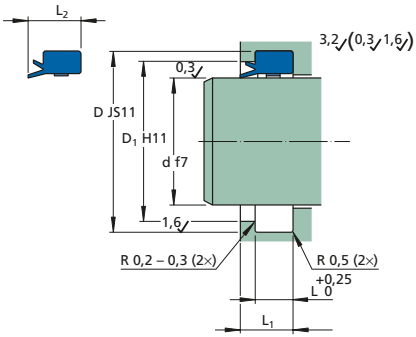

Type PWY
Wiper seal of polyurethane for installation in housing dimensions according to ISO 6195, type A. Type PWY has an outwardly directed sealing lip to provide better static sealing ability in the housing.

Dimensions							Designation	ISO 6195-A
d	D	L		L_1	L_2	D_1		
mm							–	
16	24	5	+0,2	7	7,8	21,5	**CR PWY 16×24×5×7.8**	•
18	26	5	+0,2	7	7,8	23,5	**CR PWY 18×26×5×7.8**	•
20	28	5	+0,2	7	7,8	25,5	**CR PWY 20×28×5×7.8**	•
22	30	5	+0,2	7	7,8	27,5	**CR PWY 22×30×5×7.8**	•
25	33	5	+0,2	7	7,8	27,5	**CR PWY 25×33×5×7.8**	•
28	36	5	+0,2	7	7,8	31	**CR PWY 28×36×5×7.8**	•
32	40	5	+0,2	7	7,8	37,5	**CR PWY 32×40×5×7.8**	•
35	43	4	+0,2	5	7	41	**CR PWY 35×43×4×7**	
36	44	5	+0,2	7	7,8	39	**CR PWY 36×44×5×7.8**	•
40	48	5	+0,2	7	7,8	45,5	**CR PWY 40×48×5×7.8**	•
45	53	4	+0,2	5	7	51	**CR PWY 45×53×4×7**	
	53	5	+0,2	7	7,8	50,5	**CR PWY 45×53×5×7.8**	•
50	58	5	+0,2	7	7,8	55,5	**CR PWY 50×58×5×7.8**	•
55	63	4	+0,2	5	7	61	**CR PWY 55×63×4×7**	
	65	6,3	+0,2	8,3	9	62	**CR PWY 55×65×6.3×9**	
56	64	4	+0,2	5	7	62	**CR PWY 56×64×4×7**	
	66	6,3	+0,2	8,3	9	63	**CR PWY 56×66×6.3×9**	•
60	68	4	+0,2	5	7	66	**CR PWY 60×68×4×7**	
	70	6,3	+0,2	8,3	9	67	**CR PWY 60×70×6.3×9**	
63	73	6,3	+0,2	8,3	9	70	**CR PWY 63×73×6.3×9**	•
65	73	4	+0,2	5	7	71	**CR PWY 65×73×4×7**	
70	80	6,3	+0,2	8,3	9	77	**CR PWY 70×80×6.3×9**	•
80	90	6,3	+0,2	8,3	9	87	**CR PWY 80×90×6.3×9**	•

rgab.ru Берг АБ bergab@ya.ru Тел. (495)-228-06-21, факс (495) 22

rgab.ru Берг АБ bergab@ya.ru Тел. (495)-228-06-21, факс (495) 2

Dimensions						Designation	ISO 6195-A
d	D	L	L_1	L_2	D_1		
mm						–	
90	100	6,3 +0,2	8,3	9	97	**CR PWY 90×100×6.3×9**	•
100	115	9,5 +0,3	12	13	110	**CR PWY 100×115×9.5×13**	•
110	125	9,5 +0,3	12	13	120	**CR PWY 110×125×9.5×13**	•
125	140	9,5 +0,3	12	13	135	**CR PWY 125×140×9.5×13**	•
140	155	9,5 +0,3	12	13	150	**CR PWY 140×155×9.5×13**	•
160	175	9,5 +0,3	12	13	170	**CR PWY 160×175×9.5×13**	•
180	195	9,5 +0,3	12	13	190	**CR PWY 180×195×9.5×13**	•
200	215	9,5 +0,3	12	13	210	**CR PWY 200×215×9.5×13**	•

rgab.ru Берг АБ bergab@ya.ru Тел. (495)-228-06-21, факс (495) 2

rgab.ru Берг АБ bergab@ya.ru Тел. (495)-228-06-21, факс (495) 22

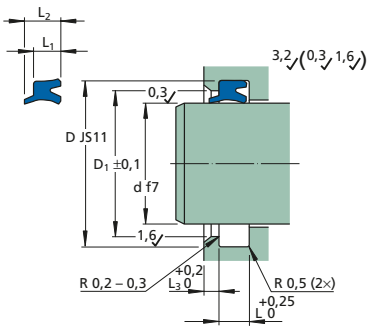

Type PWD
Double-acting wiper seal of polyurethane for installation in housing dimensions according to ISO 6195, type C.

Dimensions								Designation	ISO 6195-C
d	D	L		L_1	L_2	$L_{3\,min}$	D_1		
mm								–	
12	18	4	+0,2	3,6	4,8	2	14,5	**CR PWD 12×18×4×4.8**	•
14	20	4	+0,2	3,6	4,8	2	16,5	**CR PWD 14×20×4×4.8**	•
18	24	4	+0,2	3,6	4,8	2	20,5	**CR PWD 18×24×4×4.8**	•
22	28	4	+0,2	3,6	4,8	2	24,5	**CR PWD 22×28×4×4.8**	•
25	31	4	+0,2	3,6	4,8	2	27,5	**CR PWD 25×31×4×4.8**	
28	36	5	+0,2	4,5	5,8	2	31	**CR PWD 28×36×5×5.8**	•
36	44	5	+0,2	4,5	5,8	2	39	**CR PWD 36×44×5×5.8**	•
40	48	5	+0,2	4,5	5,8	2	43	**CR PWD 40×48×5×5.8**	
45	53	5	+0,2	4,5	5,8	2	48	**CR PWD 45×53×5×5.8**	•
50	58	5	+0,2	4,5	5,8	2	53	**CR PWD 50×58×5×5.8**	
56	66	6	+0,2	5,3	6,8	2,5	59	**CR PWD 56×66×6×6.8**	•
60	70	6	+0,2	5,3	6,8	2,5	63	**CR PWD 60×70×6×6.8**	
63	73	6	+0,2	5,3	6,8	2,5	66	**CR PWD 63×73×6×6.8**	
70	80	6	+0,2	5,3	6,8	2,5	73	**CR PWD 70×80×6×6.8**	•
75	85	6	+0,2	5,3	6,8	2,5	78	**CR PWD 75×85×6×6.8**	
80	90	6	+0,2	5,3	6,8	2,5	83	**CR PWD 80×90×6×6.8**	
90	100	6	+0,2	5,3	6,8	2,5	93	**CR PWD 90×100×6×6.8**	•
100	110	6	+0,2	5,3	6,8	2,5	103	**CR PWD 100×110×6×6.8**	
110	125	8,5	+0,3	7,7	9,5	4	114	**CR PWD 110×125×8.5×9.5**	•
125	140	8,5	+0,3	7,7	9,5	4	129	**CR PWD 125×140×8.5×9.5**	
130	145	8,5	+0,3	7,7	9,5	4	134	**CR PWD 130×145×8.5×9.5**	

rgab.ru Берг АБ bergab@ya.ru Тел. (495)-228-06-21, факс (495) 22

rgab.ru Берг АБ bergab@ya.ru Тел. (495)-228-06-21, факс (495) 2

Dimensions							Designation	ISO 6195-C
d	D	L	L_1	L_2	$L_{3\ min}$	D_1		
mm							–	
140	155	8,5 +0,3	7,7	9,5	4	144	**CR PWD 140×155×8.5×9.5**	•
240	255	8,5 +0,3	7,7	9,5	4	244	**CR PWD 240×255×8.5×9.5**	

4

rgab.ru Берг АБ bergab@ya.ru Тел. (495)-228-06-21, факс (495) 2

rgab.ru Берг АБ bergab@ya.ru Тел. (495)-228-06-21, факс (495) 2

Type PWB
Wiper seal of polyurethane with axial ridges on the inside diameter behind the sealing lip.

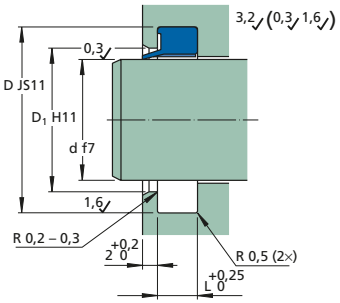

Dimensions				Designation
d	D	L	D_1	
mm				–
45	53,6	5,3	48	**CR PWB 45×53.6×5.3**
50	58,6	5,3	53	**CR PWB 50×58.6×5.3**
56	64,6	5,3	59	**CR PWB 56×64.6×5.3**
60	68,6	5,3	63	**CR PWB 60×68.6×5.3**
61	69	5,3	64	**CR PWB 61×69×5.3**
65	73,6	5,3	68	**CR PWB 65×73.6×5.3**
68	76	5,3	71	**CR PWB 68×76×5.3**
70	80,55	5,3	74	**CR PWB 70×80.55×5.3**
75	83,6	5,3	78	**CR PWB 75×83.6×5.3**
76	84	5,3	79	**CR PWB 76×84×5.3**
77	85,6	5,3	80	**CR PWB 77×85.6×5.3**
80	88,6	5,3	83	**CR PWB 80×88.6×5.3**
	90,55	5,3	84	**CR PWB 80×90.55×5.3**
88	96	5,3	91	**CR PWB 88×96×5.3**
90	98,6	5,3	93	**CR PWB 90×98.6×5.3**
91	99	5,3	94	**CR PWB 91×99×5.3**
	99,6	5,3	94	**CR PWB 91×99.6×5.3**
95	103,6	5,3	98	**CR PWB 95×103.6×5.3**
97	105,6	5,3	100	**CR PWB 97×105.6×5.3**
100	108,6	5,3	103	**CR PWB 100×108.6×5.3**
105	113,6	5,3	108	**CR PWB 105×113.6×5.3**
107	115	5,3	110	**CR PWB 107×115×5.3**

Dimensions				Designation
d	D	L	D_1	
mm				–
108	116,6	5,3	111	**CR PWB 108×116.6×5.3**
110	118,6	5,3	113	**CR PWB 110×118.6×5.3**
120	128,6	5,3	123	**CR PWB 120×128.6×5.3**
125	133,6	5,3	128	**CR PWB 125×133.6×5.3**
126	134	5,3	129	**CR PWB 126×134×5.3**
	134,6	5,3	129	**CR PWB 126×134.6×5.3**
127	140	5,3	133	**CR PWB 127×140×5.3**
137	145,6	5,3	140	**CR PWB 137×145.6×5.3**
140	148,6	5,3	143	**CR PWB 140×148.6×5.3**
146	154,6	5,3	149	**CR PWB 146×154.6×5.3**
147	155	5,3	150	**CR PWB 147×155×5.3**
155	163,6	5,3	158	**CR PWB 155×163.6×5.3**
160	168,6	5,3	163	**CR PWB 160×168.6×5.3**
170	178	5,3	173	**CR PWB 170×178×5.3**
	178,6	5,3	173	**CR PWB 170×178.6×5.3**
180	188,6	5,3	183	**CR PWB 180×188.6×5.3**
185	193,6	5,3	188	**CR PWB 185×193.6×5.3**
197	205,6	5,3	200	**CR PWB 197×205.6×5.3**
200	208,6	5,3	203	**CR PWB 200×208.6×5.3**
205	213,6	5,3	208	**CR PWB 205×213.6×5.3**
228	236,6	5,3	231	**CR PWB 228×236.6×5.3**
232	240,6	5,3	235	**CR PWB 232×240.6×5.3**

rgab.ru Берг АБ bergab@ya.ru Тел. (495)-228-06-21, факс (495) 2

rgab.ru Берг АБ bergab@ya.ru Тел. (495)-228-06-21, факс (495) 2

Type RSW
Double-acting wiper seal of polyurethane.

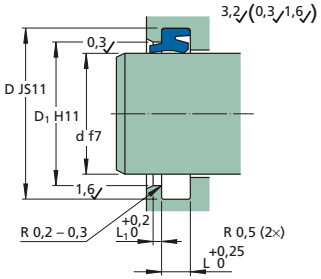

Dimensions					Designation
d	D	L	L_1	D_1	
mm					–
12	18,6	3,8	2	15	**CR RSW 12×18.6×3.8**
18	24,6	3,8	2	21	**CR RSW 18×24.6×3.8**
20	28,6	5,3	2	23	**CR RSW 20×28.6×5.3**
22	30,6	5,3	2	25	**CR RSW 22×30.6×5.3**
24	32,6	5,3	2	27	**CR RSW 24×32.6×5.3**
25	33,6	5,3	2	28	**CR RSW 25×33.6×5.3**
28	36,6	5,3	2	31	**CR RSW 28×36.6×5.3**
30	38,6	5,3	2	33	**CR RSW 30×38.6×5.3**
32	40,6	5,3	2	35	**CR RSW 32×40.6×5.3**
35	43,6	5,3	2	38	**CR RSW 35×43.6×5.3**
36	44,6	5,3	2	39	**CR RSW 36×44.6×5.3**
40	48,6	5,3	2	43	**CR RSW 40×48.6×5.3**
45	53,6	5,3	2	48	**CR RSW 45×53.6×5.3**
50	58,6	5,3	2	53	**CR RSW 50×58.6×5.3**
55	63,6	5,3	2	58	**CR RSW 55×63.6×5.3**
56	64,6	5,3	2	59	**CR RSW 56×64.6×5.3**
60	68,6	5,3	2	63	**CR RSW 60×68.6×5.3**
63	71,6	5,3	2	66	**CR RSW 63×71.6×5.3**
65	73,6	5,3	2	68	**CR RSW 65×73.6×5.3**
70	78,6	5,3	2	73	**CR RSW 70×78.6×5.3**
75	83,6	5,3	2	78	**CR RSW 75×83.6×5.3**

Dimensions					Designation
d	D	L	L_1	D_1	
mm					–
80	88,6	5,3	2	83	**CR RSW 80×88.6×5.3**
85	97,2	7,1	3	91	**CR RSW 85×97.2×7.1**
90	102,2	7,1	3	96	**CR RSW 90×102.2×7.1**
100	112,2	7,1	3	106	**CR RSW 100×112.2×7.1**
110	122,2	7,1	3	116,6	**CR RSW 110×122.2×7.1**

rgab.ru Берг АБ bergab@ya.ru Тел. (495)-228-06-21, факс (495) 2

rgab.ru Берг АБ bergab@ya.ru Тел. (495)-228-06-21, факс (495) 2

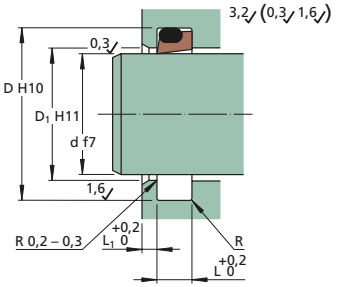

Type PO, PO2
Wiper seal of PTFE with an energizing O-ring of nitrile rubber providing the static sealing function. Type PO can also at request be delivered with an O-ring of another rubber material, e.g. fluorocarbon rubber. This size series can also be delivered with the design of type PO2.

Dimensions						Designation
d	D	L	L_1	D_1	R	
mm						–
12	18,8	5	2	13,5	0,7	**CR PO 12×18.8×5-AB1**
14	20,8	5	2	15,5	0,7	**CR PO 14×20.8×5-AB1**
15	21,8	5	2	16,5	0,7	**CR PO 15×21.8×5-AB1**
16	22,8	5	2	17,5	0,7	**CR PO 16×22.8×5-AB1**
18	24,8	5	2	19,5	0,7	**CR PO 18×24.8×5-AB1**
20	26,8	5	2	21,5	0,7	**CR PO 20×26.8×5-AB1**
22	28,8	5	2	23,5	0,7	**CR PO 22×28.8×5-AB1**
25	31,8	5	2	26,5	0,7	**CR PO 25×31.8×5-AB1**
26	32,8	5	2	27,5	0,7	**CR PO 26×32.8×5-AB1**
28	34,8	5	2	29,5	0,7	**CR PO 28×34.8×5-AB1**
30	36,8	5	2	31,5	0,7	**CR PO 30×36.8×5-AB1**
32	38,8	5	2	33,5	0,7	**CR PO 32×38.8×5-AB1**
35	41,8	5	2	36,5	0,7	**CR PO 35×41.8×5-AB1**
36	42,8	5	2	37,5	0,7	**CR PO 36×42.8×5-AB1**
37	43,8	5	2	38,5	0,7	**CR PO 37×43.8×5-AB1**
38	44,8	5	2	39,5	0,7	**CR PO 38×44.8×5-AB1**
40	46,8	5	2	41,5	0,7	**CR PO 40×46.8×5-AB1**
42	48,8	5	2	43,5	0,7	**CR PO 42×48.8×5-AB1**
45	51,8	5	2	46,5	0,7	**CR PO 45×51.8×5-AB1**
48	54,8	5	2	49,5	0,7	**CR PO 48×54.8×5-AB1**
50	56,8	5	2	51,5	0,7	**CR PO 50×56.8×5-AB1**

rgab.ru Берг АБ bergab@ya.ru Тел. (495)-228-06-21, факс (495) 2

rgab.ru Берг АБ bergab@ya.ru Тел. (495)-228-06-21, факс (495) 2

Dimensions						Designation
d	D	L	L_1	D_1	R	
mm						–
52	58,8	5	2	53,5	0,7	**CR PO 52×58.8×5-AB1**
55	61,8	5	2	56,5	0,7	**CR PO 55×61.8×5-AB1**
56	62,8	5	2	57,5	0,7	**CR PO 56×62.8×5-AB1**
58	64,8	5	2	59,5	0,7	**CR PO 58×64.8×5-AB1**
60	66,8	5	2	61,5	0,7	**CR PO 60×66.8×5-AB1**
63	69,8	5	2	64,5	0,7	**CR PO 63×69.8×5-AB1**
65	73,8	6	2	66,5	1	**CR PO 65×73.8×6-AB1**
70	78,8	6	2	71,5	1	**CR PO 70×78.8×6-AB1**
75	83,8	6	2	76,5	1	**CR PO 75×83.8×6-AB1**
80	88,8	6	2	81,5	1	**CR PO 80×88.8×6-AB1**
85	93,8	6	2	86,5	1	**CR PO 85×93.8×6-AB1**
90	98,8	6	2	91,5	1	**CR PO 90×98.8×6-AB1**
95	103,8	6	2	96,5	1	**CR PO 95×103.8×6-AB1**
100	108,8	6	2	101,5	1	**CR PO 100×108.8×6-AB1**
110	118,8	6	2	111,5	1	**CR PO 110×118.8×6-AB1**
120	128,8	6	2	121,5	1	**CR PO 120×128.8×6-AB1**
125	133,8	6	2	126,5	1	**CR PO 125×133.8×6-AB1**
130	138,8	6	2	131,5	1	**CR PO 130×138.8×6-AB1**
140	148,8	6	2	141,5	1	**CR PO 140×148.8×6-AB1**
150	158,8	6	2	151,5	1	**CR PO 150×158.8×6-AB1**
160	168,8	6	2	161,5	1	**CR PO 160×168.8×6-AB1**

rgab.ru Берг АБ bergab@ya.ru Тел. (495)-228-06-21, факс (495) 2

rgab.ru Берг АБ bergab@ya.ru Тел. (495)-228-06-21, факс (495) 2

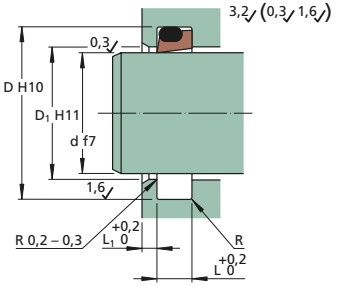

Type PO, PO2
Wiper seal of PTFE with an energizing O-ring of nitrile rubber providing the static sealing function. Type PO can also at request be delivered with an O-ring of another rubber material, e.g. fluorocarbon rubber. This size series can also be delivered with the design of type PO2.

Dimensions						Designation
d	D	L	L_1	D_1	R	
mm						–
180	188,8	6	2	181,5	1	**CR PO 180×188.8×6-AB1**
190	198,8	6	2	191,5	1	**CR PO 190×198.8×6-AB1**
200	208,8	6	2	201,5	1	**CR PO 200×208.8×6-AB1**
205	217,2	8,4	2	207	1,2	**CR PO 205×217.2×8.4-AB1**
220	228,8	6	2	221,5	1	**CR PO 220×228.8×6-AB1**
250	262,2	8,4	3	252	1,2	**CR PO 250×262.2×8.4-AB1**
260	272,2	8,4	3	262	1,2	**CR PO 260×272.2×8.4-AB1**
280	292,2	8,4	3	282	1,2	**CR PO 280×292.2×8.4-AB1**
320	332,2	8,4	3	322	1,2	**CR PO 320×332.2×8.4-AB1**
350	362,2	8,4	3	352	1,2	**CR PO 350×362.2×8.4-AB1**
360	372,2	8,4	3	362	1,2	**CR PO 360×372.2×8.4-AB1**
600	620	14	3	602,5	1,2	**CR PO 600×620×14×3-AB1**
640	660	14	3	642,5	1,2	**CR PO 640×660×14×3-AB1**
800	820	14	3	802,5	1,2	**CR PO 800×820×14×3-AB1**
1 100	1 120	14	3	1 102,5	1,2	**CR PO 1100×1120×14×3-AB1**

rgab.ru Берг АБ bergab@ya.ru Тел. (495)-228-06-21, факс (495) 2

rgab.ru Берг АБ bergab@ya.ru Тел. (495)-228-06-21, факс (495) 2

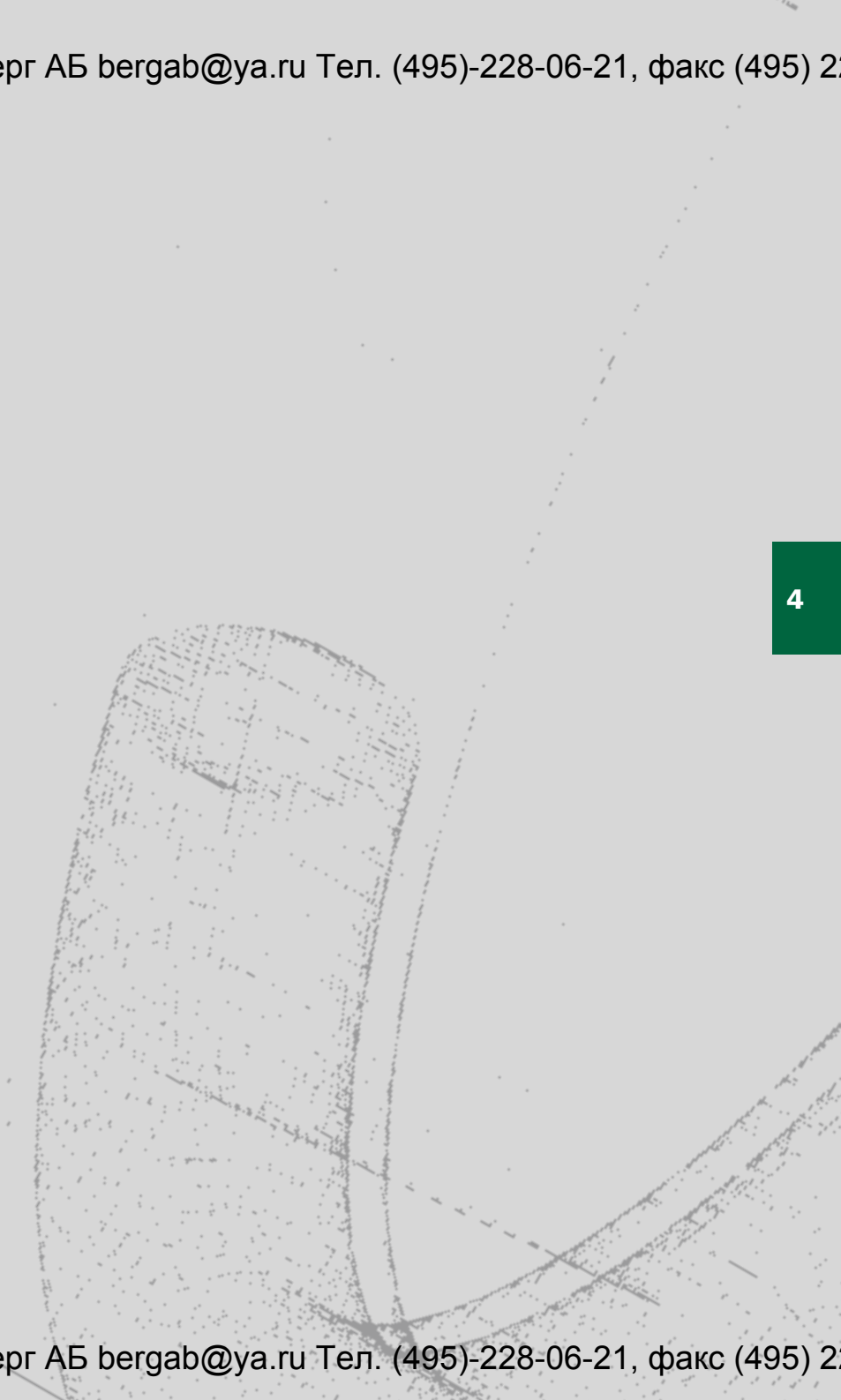

rgab.ru Берг АБ bergab@ya.ru Тел. (495)-228-06-21, факс (495) 2

rgab.ru Берг АБ bergab@ya.ru Тел. (495)-228-06-21, факс (495) 22

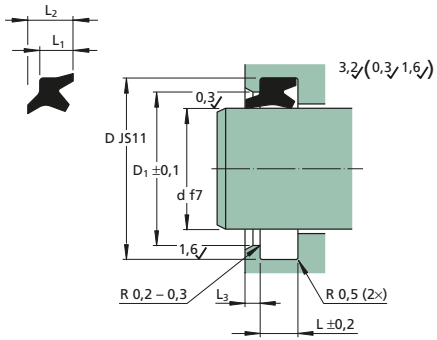

Type SDR
Double-acting wiper seal of nitrile rubber. Type SDR can also be manufactured of fluorocarbon rubber at request.

Dimensions							**Designation**
d	D	L	L_1	L_2	$L_{3\,min}$	D_1	
mm							–
12	20	5	4,5	6	2	16,3	**CR SDR 12×20×5×6**
14	22	5	4,5	6	2	18,3	**CR SDR 14×22×5×6**
16	24	5	4,5	6	2	20,3	**CR SDR 16×24×5×6**
18	26	5	4,5	6	2	22,3	**CR SDR 18×26×5×6**
20	28	5	4,5	6	2	24,3	**CR SDR 20×28×5×6**
22	30	5	4,5	6	2	26,3	**CR SDR 22×30×5×6**
22,4	30,4	5	4,5	6	2	26,7	**CR SDR 22.4×30.4×5×6**
25	33	5	4,5	6	2	29,3	**CR SDR 25×33×5×6**
28	36	5	4,5	6	2	32,3	**CR SDR 28×36×5×6**
30	38	6	5	6,5	2	34	**CR SDR 30×38×6×6.5**
31,5	39,5	6	5	6,5	2	35,5	**CR SDR 31.5×39.5×6×6.5**
32	40	6	5	6,5	2	36	**CR SDR 32×40×6×6.5**
35	43	6	5	6,5	2	39	**CR SDR 35×43×6×6.5**
35,5	43,5	6	5	6,5	2	39,5	**CR SDR 35.5×43.5×6×6.5**
36	44	6	5	6,5	2	40	**CR SDR 36×44×6×6.5**
40	48	6	5	6,5	2	44	**CR SDR 40×48×6×6.5**
45	53	6	5	6,5	2	49	**CR SDR 45×53×6×6.5**
50	58	6	5	6,5	2	54	**CR SDR 50×58×6×6.5**
55	63	6	5	6,5	2	59	**CR SDR 55×63×6×6.5**
56	64	6	5	6,5	2	60	**CR SDR 56×64×6×6.5**
60	68	6	5	6,5	2	64	**CR SDR 60×68×6×6.5**

rgab.ru Берг АБ bergab@ya.ru Тел. (495)-228-06-21, факс (495) 22

rgab.ru Берг АБ bergab@ya.ru Тел. (495)-228-06-21, факс (495) 2

Dimensions							Designation
d	D	L	L_1	L_2	$L_{3\,min}$	D_1	
mm							–
63	71	6	5	6,5	2	67	**CR SDR 63×71×6×6.5**
65	73	6	5	6,5	2	69	**CR SDR 65×73×6×6.5**
67	75	6	5	6,5	2	71	**CR SDR 67×75×6×6.5**
70	80	7	6	8	3	75	**CR SDR 70×80×7×8**
71	81	7	6	8	3	76	**CR SDR 71×81×7×8**
75	85	7	6	8	3	80	**CR SDR 75×85×7×8**
80	90	7	6	8	3	85	**CR SDR 80×90×7×8**
85	95	7	6	8	3	90	**CR SDR 85×95×7×8**
90	100	7	6	8	3	95	**CR SDR 90×100×7×8**
95	105	7	6	8	3	100	**CR SDR 95×105×7×8**
100	110	7	6	8	3	105	**CR SDR 100×110×7×8**
105	115	7	6	8	3	110	**CR SDR 105×115×7×8**
110	120	7	6	8	3	115	**CR SDR 110×120×7×8**
112	122	7	6	8	3	117	**CR SDR 112×122×7×8**
118	128	7	6	8	3	123	**CR SDR 118×128×7×8**
125	138	8	7	9,5	3	132	**CR SDR 125×138×8×9.5**
140	153	8	7	9,5	3	147	**CR SDR 140×153×8×9.5**
150	163	8	7	9,5	3	157	**CR SDR 150×163×8×9.5**
160	173	8	7	9,5	3	167	**CR SDR 160×173×8×9.5**
165	178	8	7	9,5	3	172	**CR SDR 165×178×8×9.5**
175	188	8	7	9,5	3	182	**CR SDR 175×188×8×9.5**

rgab.ru Берг АБ bergab@ya.ru Тел. (495)-228-06-21, факс (495) 2

rgab.ru Берг АБ bergab@ya.ru Тел. (495)-228-06-21, факс (495) 22

Wiper seal type SDR
d **180 – 315** mm

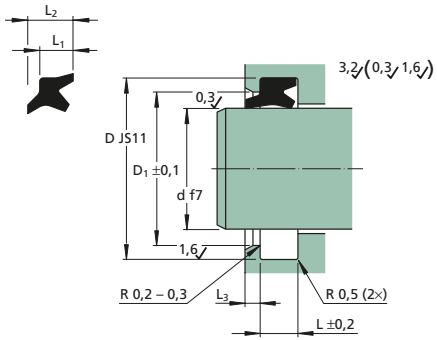

Type SDR
Double-acting wiper seal of nitrile rubber. Type SDR can also be manufactured of fluorocarbon rubber at request.

Dimensions							Designation
d	D	L	L_1	L_2	$L_{3\,min}$	D_1	
mm							–
180	193	8	7	9,5	3	187	**CR SDR 180×193×8×9.5**
190	203	8	7	9,5	3	197	**CR SDR 190×203×8×9.5**
200	213	8	7	9,5	3	207	**CR SDR 200×213×8×9.5**
205	218	8	7	9,5	3	212	**CR SDR 205×218×8×9.5**
220	233	8	7	9,5	3	227	**CR SDR 220×233×8×9.5**
280	296	11	10	13	4	288	**CR SDR 280×296×11×13**
300	316	11	10	13	4	308	**CR SDR 300×316×11×13**
315	331	11	10	13	4	323	**CR SDR 315×331×11×13**

rgab.ru Берг АБ bergab@ya.ru Тел. (495)-228-06-21, факс (495) 22

rgab.ru Берг АБ bergab@ya.ru Тел. (495)-228-06-21, факс (495) 2

rgab.ru Берг АБ bergab@ya.ru Тел. (495)-228-06-21, факс (495) 2

rgab.ru Берг АБ bergab@ya.ru Тел. (495)-228-06-21, факс (495) 2

Type SER
Mini wiper seal of nitrile rubber. Type SER can also be manufactured of fluorocarbon rubber at request.

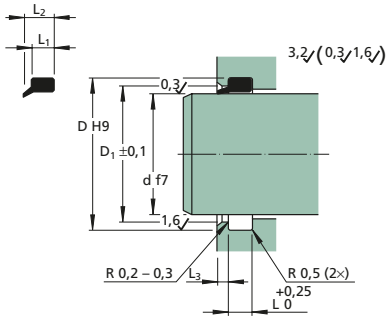

Dimensions							Designation
d	D	L	L_1	L_2	L_3	D_1	
mm							–
3	6	2,5	2	2,75	1,5	4,5	**CR SER 3×6×2.5×2.75**
4	7	2,5	2	2,75	1,5	5,5	**CR SER 4×7×2.5×2.75**
5	8	2,5	2	2,75	1,5	6,5	**CR SER 5×8×2.5×2.75**
6	9	2,5	2	2,75	1,5	7,5	**CR SER 6×9×2.5×2.75**
7	10	2,5	2	2,75	1,5	8,5	**CR SER 7×10×2.5×2.75**
8	11	2,5	2	2,75	1,5	9,5	**CR SER 8×11×2.5×2.75**
9	12	2,5	2	2,75	1,5	10,5	**CR SER 9×12×2.5×2.75**
10	13	2,5	2	2,75	1,5	11,5	**CR SER 10×13×2.5×2.75**
	14	3,2	2,9	3,9	1,5	12	**CR SER 10×14×3.2×3.9**
11,2	15,2	3,2	2,9	3,9	1,5	13,2	**CR SER 11.2×15.2×3.2×3.9**
12	16	3,2	2,9	3,9	1,5	14	**CR SER 12×16×3.2×3.9**
12,5	16,5	3,2	2,9	3,9	1,5	14,5	**CR SER 12.5×16.5×3.2×3.9**
14	18	3,2	2,9	3,9	1,5	16	**CR SER 14×18×3.2×3.9**
15	19	3,2	2,9	3,9	1,5	17	**CR SER 15×19×3.2×3.9**
16	20	3,2	2,9	3,9	1,5	18	**CR SER 16×20×3.2×3.9**
18	22	3,2	2,9	3,9	1,5	20	**CR SER 18×22×3.2×3.9**
20	24	3,2	2,9	3,9	1,5	22	**CR SER 20×24×3.2×3.9**
22	26	3,2	2,9	3,9	1,5	24	**CR SER 22×26×3.2×3.9**
	28	4,7	4,3	5,8	2	25	**CR SER 22×28×4.7×5.8**
22,4	28,4	4,7	4,3	5,8	2	25,4	**CR SER 22.4×28.4×4.7×5.8**
24	30	4,7	4,3	5,8	2	27	**CR SER 24×30×4.7×5.8**
25	31	4,7	4,3	5,8	2	28	**CR SER 25×31×4.7×5.8**

rgab.ru Берг АБ bergab@ya.ru Тел. (495)-228-06-21, факс (495) 2

rgab.ru Берг АБ bergab@ya.ru Тел. (495)-228-06-21, факс (495) 2

Dimensions							Designation
d	D	L	L_1	L_2	L_3	D_1	
mm							–
26	32	4,7	4,3	5,8	2	29	**CR SER 26×32×4.7×5.8**
28	34	4,7	4,3	5,8	2	31	**CR SER 28×34×4.7×5.8**
30	36	4,7	4,3	5,8	2	33	**CR SER 30×36×4.7×5.8**
31	37	4,7	4,3	5,8	2	34	**CR SER 31×37×4.7×5.8**
31,5	37,5	4,7	4,3	5,8	2	34,5	**CR SER 31.5×37.5×4.7×5.8**
32	38	4,7	4,3	5,8	2	35	**CR SER 32×38×4.7×5.8**
34	40	4,7	4,3	5,8	2	37	**CR SER 34×40×4.7×5.8**
35	41	4,7	4,3	5,8	2	38	**CR SER 35×41×4.7×5.8**
35,5	41,5	4,7	4,3	5,8	2	38,5	**CR SER 35.5×41.5×4.7×5.8**
36	42	4,7	4,3	5,8	2	39	**CR SER 36×42×4.7×5.8**
38	44	4,7	4,3	5,8	2	41	**CR SER 38×44×4.7×5.8**
40	46	4,7	4,3	5,8	2	43	**CR SER 40×46×4.7×5.8**
41	47	4,7	4,3	5,8	2	44	**CR SER 41×47×4.7×5.8**
42	48	4,7	4,3	5,8	2	45	**CR SER 42×48×4.7×5.8**
44	50	4,7	4,3	5,8	2	47	**CR SER 44×50×4.7×5.8**
45	51	4,7	4,3	5,8	2	48	**CR SER 45×51×4.7×5.8**
46	52	4,7	4,3	5,8	2	49	**CR SER 46×52×4.7×5.8**
48	54	4,7	4,3	5,8	2	51	**CR SER 48×54×4.7×5.8**
	58	7,5	6,9	9,4	3	53	**CR SER 48×58×7.5×9.4**
50	56	4,7	4,3	5,8	2	53	**CR SER 50×56×4.7×5.8**
	60	7,5	6,9	9,4	3	55	**CR SER 50×60×7.5×9.4**
52	62	7,5	6,9	9,4	3	57	**CR SER 52×62×7.5×9.4**

rgab.ru Берг АБ bergab@ya.ru Тел. (495)-228-06-21, факс (495) 2

rgab.ru Берг АБ bergab@ya.ru Тел. (495)-228-06-21, факс (495) 2

Type SER
Mini wiper seal of nitrile rubber. Type SER can also be manufactured of fluorocarbon rubber at request.

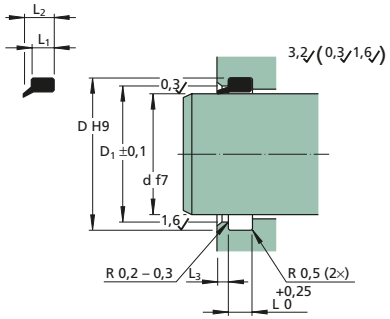

Dimensions							Designation
d	D	L	L_1	L_2	L_3	D_1	
mm							–
53	63	7,5	6,9	9,4	3	58	**CR SER 53×63×7.5×9.4**
55	65	7,5	6,9	9,4	3	60	**CR SER 55×65×7.5×9.4**
56	66	7,5	6,9	9,4	3	61	**CR SER 56×66×7.5×9.4**
58	68	7,5	6,9	9,4	3	63	**CR SER 58×68×7.5×9.4**
60	70	7,5	6,9	9,4	3	65	**CR SER 60×70×7.5×9.4**
62	72	7,5	6,9	9,4	3	67	**CR SER 62×72×7.5×9.4**
63	73	7,5	6,9	9,4	3	68	**CR SER 63×73×7.5×9.4**
65	75	7,5	6,9	9,4	3	70	**CR SER 65×75×7.5×9.4**
67	77	7,5	6,9	9,4	3	72	**CR SER 67×77×7.5×9.4**
70	80	7,5	6,9	9,4	3	75	**CR SER 70×80×7.5×9.4**
71	81	7,5	6,9	9,4	3	76	**CR SER 71×81×7.5×9.4**
75	85	7,5	6,9	9,4	3	80	**CR SER 75×85×7.5×9.4**
80	90	7,5	6,9	9,4	3	85	**CR SER 80×90×7.5×9.4**
85	95	7,5	6,9	9,4	3	90	**CR SER 85×95×7.5×9.4**
90	100	7,5	6,9	9,4	3	95	**CR SER 90×100×7.5×9.4**
95	105	7,5	6,9	9,4	3	100	**CR SER 95×105×7.5×9.4**
100	110	7,5	6,9	9,4	3	105	**CR SER 100×110×7.5×9.4**
120	130	7,5	6,9	9,4	3	125	**CR SER 120×130×7.5×9.4**

rgab.ru Берг АБ bergab@ya.ru Тел. (495)-228-06-21, факс (495) 2

rgab.ru Берг АБ bergab@ya.ru Тел. (495)-228-06-21, факс (495) 2

Type PW
Wiper seal of polyurethane with an axial static sealing edge at the front edge of the wiper body.

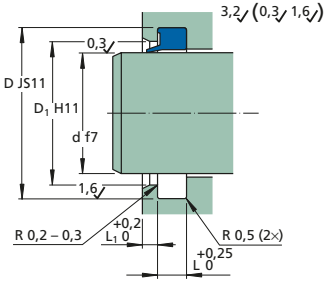

Dimensions					Designation
d	D	L	L_1	D_1	
mm					–
4	12	3	1	9	**CR PW 4×12×3**
5	12	2,8	1	9	**CR PW 5×12×2.8**
6	12	3	1	9	**CR PW 6×12×3**
8	14,6	3,8	1	9	**CR PW 8×14.6×3.8**
10	16,6	3,8	1	13,8	**CR PW 10×16.6×3.8**
12	18,6	3,8	2	15	**CR PW 12×18.6×3.8**
14	20,6	3,8	2	17	**CR PW 14×20.6×3.8**
15	21,6	3,8	2	18	**CR PW 15×21.6×3.8**
16	22,5	3	2	19	**CR PW 16×22.5×3**
	22,6	3,8	2	19	**CR PW 16×22.6×3.8**
18	24,6	3,8	2	21	**CR PW 18×24.6×3.8**
20	26	3,4	2	23	**CR PW 20×26×3.4**
	28,6	5,3	2	23	**CR PW 20×28.6×5.3**
22	30,6	2,2	2	25	**CR PW 22×30.6×2.2**
	30,6	5,3	2	25	**CR PW 22×30.6×5.3**
24	32,6	5,3	2	27	**CR PW 24×32.6×5.3**
	32,6	2,2	2	27	**CR PW 24×32.6×2.2**
25	33,6	5,3	2	28	**CR PW 25×33.6×5.3**
28	36,6	5,3	2	31	**CR PW 28×36.6×5.3**
30	38,6	5,3	2	33	**CR PW 30×38.6×5.3**
	40	3	2	34,5	**CR PW 30×40×3**
32	40	3,7	2	35	**CR PW 32×40×3.7**
	40,6	5,3	2	35	**CR PW 32×40.6×5.3**

Dimensions					Designation
d	D	L	L_1	D_1	
mm					–
35	43,6	5	2	38	**CR PW 35×43.6×5**
	43,6	5,3	2	38	**CR PW 35×43.6×5.3**
	45	4	2	39	**CR PW 35×45×4**
36	44,6	5,3	2	39	**CR PW 36×44.6×5.3**
38	46,6	5,3	2	41	**CR PW 38×46.6×5.3**
	48,5	4,8	2	41	**CR PW 38×48.5×4.8**
40	48,6	5,3	2	43	**CR PW 40×48.6×5.3**
42	50,6	5,3	2	45	**CR PW 42×50.6×5.3**
45	53,6	5,3	2	48	**CR PW 45×53.6×5.3**
	55,6	5,3	2	48	**CR PW 45×55.6×5.3**
	60	4,2	3	53	**CR PW 45×60×4.2**
46	54,6	5,3	3	49	**CR PW 46×54.6×5.3**
50	58,6	5,3	3	53	**CR PW 50×58.6×5.3**
	60,6	5,3	3	53	**CR PW 50×60.6×5.3**
	65,5	4,2	3	58	**CR PW 50×65.5×4.2**
53	61,6	5,3	3	56	**CR PW 53×61.6×5.3**
55	63,6	5,3	3	58	**CR PW 55×63.6×5.3**
	65,6	5,3	3	58	**CR PW 55×65.6×5.3**
56	64,6	5,3	3	59	**CR PW 56×64.6×5.3**
	66,6	5,3	3	59	**CR PW 56×66.6×5.3**
60	68,6	5,3	3	63	**CR PW 60×68.6×5.3**
	70,6	5,5	3	66,5	**CR PW 60×70.6×5.5**
63	71,6	5,3	3	66	**CR PW 63×71.6×5.3**
	73,6	5,3	3	66	**CR PW 63×73.6×5.3**
65	73,6	5,3	3	68	**CR PW 65×73.6×5.3**
	76,6	6	3	71,5	**CR PW 65×76.6×6**
67	76,6	5,5	3	71	**CR PW 67×76.6×5.5**

rgab.ru Берг АБ bergab@ya.ru Тел. (495)-228-06-21, факс (495) 2

rgab.ru Берг АБ bergab@ya.ru Тел. (495)-228-06-21, факс (495) 22

Dimensions					Designation
d	D	L	L_1	D_1	
mm					–
70	78,6	5,3	3	73	**CR PW 70×78.6×5.3**
	82,6	7,1	3	76	**CR PW 70×82.6×7.1**
73	81,6	5,3	3	76	**CR PW 73×81.6×5.3**
	83,6	7,3	3	76	**CR PW 73×83.6×7.3**
75	83,6	5,3	3	78	**CR PW 75×83.6×5.3**
	87,2	7,1	3	81	**CR PW 75×87.2×7.1**
78	86	5	3	81	**CR PW 78×86×5**
	88,6	5,5	3	84,5	**CR PW 78×88.6×5.5**
	92,2	7,1	3	85	**CR PW 78×92.2×7.1**
80	88,6	5,3	3	83	**CR PW 80×88.6×5.3**
	92,6	7,1	3	86	**CR PW 80×92.6×7.1**
85	93,6	5,3	3	88	**CR PW 85×93.6×5.3**
	97,2	7,1	3	91	**CR PW 85×97.2×7.1**
90	102	6	3	94	**CR PW 90×102×6**
	102,2	7,1	3	96	**CR PW 90×102.2×7.1**
92	103,6	5,5	3	97	**CR PW 92×103.6×5.5**
95	107,2	7,1	3	101	**CR PW 95×107.2×7.1**
97	105	5	3	100	**CR PW 97×105×5**
99	109,6	5,5	3	105,5	**CR PW 99×109.6×5.5**
100	112,2	6	3	104	**CR PW 100×112.2×6**
	112,2	7,1	3	106	**CR PW 100×112.2×7.1**
105	117,2	7,1	3	111	**CR PW 105×117.2×7.1**
110	122,2	7,1	3	116	**CR PW 110×122.2×7.1**
112	124,2	7,1	3	118	**CR PW 112×124.2×7.1**
115	123,6	5,3	3	118	**CR PW 115×123.6×5.3**
	127,2	7,1	3	121	**CR PW 115×127.2×7.1**

Dimensions					Designation
d	D	L	L_1	D_1	
mm					–
118	126	5	3	121	**CR PW 118×126×5**
120	130,6	5,5	3	126,5	**CR PW 120×130.6×5.5**
	132,2	7,1	3	126	**CR PW 120×132.2×7.1**
125	137,2	7,1	3	131	**CR PW 125×137.2×7.1**
127	135,6	5,3	3	130	**CR PW 127×135.6×5.3**
130	142,2	7,1	3	136	**CR PW 130×142.2×7.1**
135	147,2	7,1	3	141	**CR PW 135×147.2×7.1**
140	148,6	6	3	143	**CR PW 140×148.6×6**
	152,2	7,1	3	146	**CR PW 140×152.2×7.1**
	155	9	3	147	**CR PW 140×155×9**
141	151,6	5,5	3	147,5	**CR PW 141×151.6×5.5**
143	151	5,5	3	147,5	**CR PW 143×151×5.5**
145	157,2	7,1	3	151	**CR PW 145×157.2×7.1**
150	162,2	7,1	3	156	**CR PW 150×162.2×7.1**
	165	7,5	3	156	**CR PW 150×165×7.5**
160	175,2	10,1	3	168	**CR PW 160×175.2×10.1**
162	172,6	5,5	3	168	**CR PW 162×172.6×5.5**
170	178,6	5,3	3	173	**CR PW 170×178.6×5.3**
	185,2	10,1	3	178	**CR PW 170×185.2×10.1**
180	195,2	10,1	3	188	**CR PW 180×195.2×10.1**
183	193,6	5,5	3	189	**CR PW 183×193.6×5.5**
190	205,2	10,1	3	198	**CR PW 190×205.2×10.1**
	210	10,1	3	200	**CR PW 190×210×10.1**
200	215,2	10,1	3	208	**CR PW 200×215.2×10.1**

rgab.ru Берг АБ bergab@ya.ru Тел. (495)-228-06-21, факс (495) 22

rgab.ru Берг АБ bergab@ya.ru Тел. (495)-228-06-21, факс (495) 2

Type PW
Wiper seal of polyurethane with an axial static sealing edge at the front edge of the wiper body.

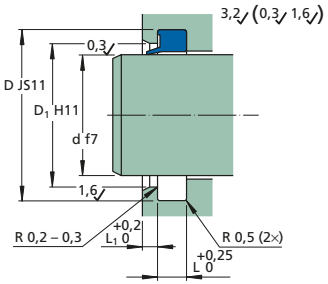

Dimensions					Designation
d	D	L	L_1	D_1	
mm					–
210	225,2	10,1	3	218	**CR PW 210×225.2×10.1**
220	235,2	10,1	3	228	**CR PW 220×235.2×10.1**
230	245,2	10,1	3	238	**CR PW 230×245.2×10.1**
240	255,2	10,1	3	248	**CR PW 240×255.2×10.1**
250	265,2	10,1	3	258	**CR PW 250×265.2×10.1**
257	267,6	5,5	3	264	**CR PW 257×267.6×5.5**
280	300	10,2	3	290	**CR PW 280×300×10.2**

rgab.ru Берг АБ bergab@ya.ru Тел. (495)-228-06-21, факс (495) 2

rgab.ru Берг АБ bergab@ya.ru Тел. (495)-228-06-21, факс (495) 2

rgab.ru Берг АБ bergab@ya.ru Тел. (495)-228-06-21, факс (495) 2

rgab.ru Берг АБ bergab@ya.ru Тел. (495)-228-06-21, факс (495) 22

Type DK
Wiper seal of polyurethane

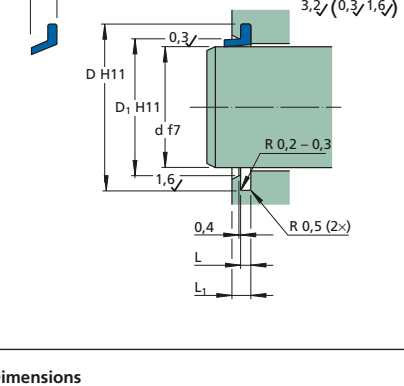

Dimensions						Designation
d	D	L	L_1	L_2	D_1	
mm						–
12	18	1,3	2,5	3,5	14,1	**CR DK 12×18×1.3**
30	37,5	1,6	3	4,5	32,9	**CR DK 30×37.5×1.6**
33	40,5	1,6	3	4,5	35,9	**CR DK 33×40.5×1.6**
40	47,5	1,6	3	4,5	42,9	**CR DK 40×47.5×1.6**
45	52,5	1,6	3	4,5	47,9	**CR DK 45×52.5×1.6**
50	60	2,15	4	6	54,6	**CR DK 50×60×2.15**
55	65	2,15	4	6	59,6	**CR DK 55×65×2.15**
60	70	2,15	4	6	64,6	**CR DK 60×70×2.15**
63	73	2,15	4	6	67,6	**CR DK 63×73×2.15**
78	92	3,15	6	9	82,6	**CR DK 78×92×3.15**
80	90	2,15	4	6	84,6	**CR DK 80×90×2.15**
100	110	2,15	4	6	104,6	**CR DK 100×110×2.15**
140	150	2,15	4	6	144,6	**CR DK 140×150×2.15**
190	205	3,15	6	9	197	**CR DK 190×205×3.15**

rgab.ru Берг АБ bergab@ya.ru Тел. (495)-228-06-21, факс (495) 22

rgab.ru Берг АБ bergab@ya.ru Тел. (495)-228-06-21, факс (495) 2

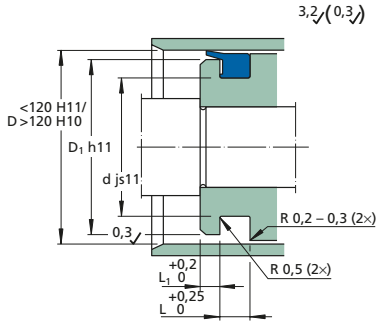

Type PPUA
Wiper seal of polyurethane with an axial static sealing edge on the front corner of the wiper body. To be used on pistons in single-acting cylinders.

Dimensions					Designation
D	d	L	L_1	D_1	
mm					–
40	31,4	5,3	3	37	**CR PPUA 40×31.4×5.3**
50	41,4	5,3	3	47	**CR PPUA 50×41.4×5.3**
63	54,4	5,3	4	60	**CR PPUA 63×54.4×5.3**
70	61,4	5,3	4	67	**CR PPUA 70×61.4×5.3**
80	71,4	5,3	5	77	**CR PPUA 80×71.4×5.3**
90	81,4	5,3	5	87	**CR PPUA 90×81.4×5.3**
95	86,4	5,3	5	92	**CR PPUA 95×86.4×5.3**
100	91,4	5,3	5	97	**CR PPUA 100×91.4×5.3**
110	100	5	5	104	**CR PPUA 110×100×5**
	101,4	5,3	5	107	**CR PPUA 110×101.4×5.3**
120	111,4	5,3	5	117	**CR PPUA 120×111.4×5.3**

rgab.ru Берг АБ bergab@ya.ru Тел. (495)-228-06-21, факс (495) 2

rgab.ru Берг АБ bergab@ya.ru Тел. (495)-228-06-21, факс (495) 22

Type PWF
Wiper seal of polyurethane.

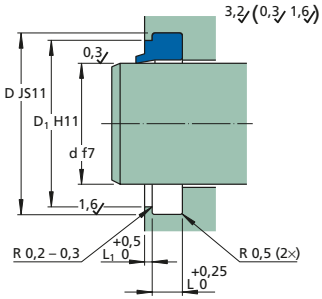

Dimensions					Designation
d	D	L	L_1	D_1	
mm					–
18	26	4	1	24	**CR PWF 18×26×4**
20	28	4	1	26	**CR PWF 20×28×4**
22	30	4	1	28	**CR PWF 22×30×4**
25	33	4	1	31	**CR PWF 25×33×4**
28	36	4	1	34	**CR PWF 28×36×4**
30	38	4	1	36	**CR PWF 30×38×4**
32	40	4	1	38	**CR PWF 32×40×4**
35	43	4	1	41	**CR PWF 35×43×4**
36	44	4	1	42	**CR PWF 36×44×4**
40	48	4	1	46	**CR PWF 40×48×4**
42	50	4	1	48	**CR PWF 42×50×4**
45	53	4	1	51	**CR PWF 45×53×4**
50	58	4	1	56	**CR PWF 50×58×4**
55	63	4	1	61	**CR PWF 55×63×4**
56	64	4	1	62	**CR PWF 56×64×4**
60	68	4	1	66	**CR PWF 60×68×4**
63	71	4	1	69	**CR PWF 63×71×4**
65	73	4	1	71	**CR PWF 65×73×4**
70	78	4	1	76	**CR PWF 70×78×4**
75	83	4	1	81	**CR PWF 75×83×4**
80	88	4	1	86	**CR PWF 80×88×4**

rgab.ru Берг АБ bergab@ya.ru Тел. (495)-228-06-21, факс (495) 22

rgab.ru Берг АБ bergab@ya.ru Тел. (495)-228-06-21, факс (495) 2

Dimensions					Designation
d	D	L	L_1	D_1	
mm					–
85	93	4	1	91	**CR PWF 85×93×4**
90	98	4	1	96	**CR PWF 90×98×4**
100	108	4	1	106	**CR PWF 100×108×4**

rgab.ru Берг АБ bergab@ya.ru Тел. (495)-228-06-21, факс (495) 2

rgab.ru Берг АБ bergab@ya.ru Тел. (495)-228-06-21, факс (495) 2

rgab.ru Берг АБ bergab@ya.ru Тел. (495)-228-06-21, факс (495) 2

rgab.ru Берг АБ bergab@ya.ru Тел. (495)-228-06-21, факс (495) 2

Guide rings and guide strips

Guide rings and guide strips **212**
Choice of material 212
Phenolic/fabric 213
Acetal resin 213
PTFE 214
The location of the guide 215
Calculation of the guide width 218
Choice of dimensions 220
Guide rings of phenolic/fabric 220
Guide rings of acetal resin 220
Guide strips of PTFE 220
Groove design and assembly 220
Groove edges 220
Guide ring material comparison 222
Guide rings of phenolic/fabric 222
Guide rings of acetal resin 223
Guide strips of PTFE 234
Calculation of the guide strip length 236
Type SB, SB/C guide strips for piston 237
Type SB, SB/C guide strips for rod 237

Product tables
RGR .. PF 224
RGR .. A 230
PGR .. PF 232
PGR .. A 236
SB, SB/C 242

5

rgab.ru Берг АБ bergab@ya.ru Тел. (495)-228-06-21, факс (495) 2

rgab.ru Берг АБ bergab@ya.ru Тел. (495)-228-06-21, факс (495) 2

Guide rings and guide strips

The task of guide rings and guide strips of plastic materials is to guide the piston in the cylinder bore and the rod in the cylinder head in a working hydraulic cylinder as well as to withstand arising side loads and prevent metallic contact between these axially mobile parts.

Plastic guides have been used instead of metallic guides for several years now which has resulted in a considerably longer service life for hydraulic cylinders. Plastic materials work more smoothly against the cylinder tube and the sealing surface of the rod, although contamination particles often are included in the hydraulic oil.

Metal guides are only slightly deformed also at heavy loads which implies that the force is concentrated to small areas. The speed in a hydraulic cylinder is also very low from a guide function point of view which results in an unsufficient lubrication. This condition in combination with the presence of contamination particles result in a rapid wear of the metal guide, the cylinder tube and the rod surface.

From a mechanical point of view, the main advantage with a plastic guide in comparison with a metal guide is illustrated in **fig 1**.

Choice of material

The demands on reliability are continuously increasing. At the same time the service conditions are getting tougher in order to match the development towards higher effectiveness of the hydraulic systems. Therefore, it is very important to be familiar with the functional parameters such as service temperature, load, speed and type of hydraulic medium when choosing the most appropriate guide material.

We recommend the materials phenolic/fabric, acetal resin and PTFE for guides, depending on the field of application, see **Table 1**. See also **Table 2** , **page 216**, and **Table 3**, **page 217**, as well as the pv diagrams in **Diagram 1**, **2**, and **3**, **page 214**, for the selection of the correct guide material.

Fig 1

Comparison between a metal guide and a plastic guide

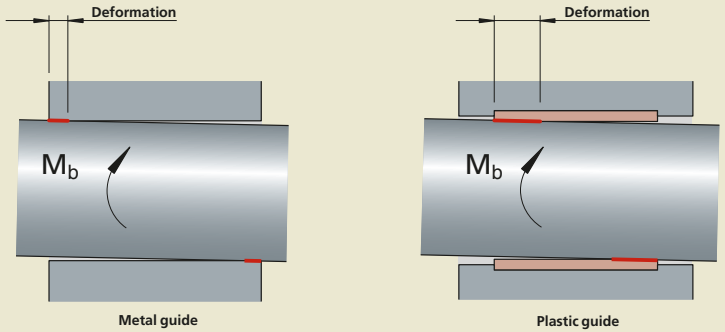

rgab.ru Берг АБ bergab@ya.ru Тел. (495)-228-06-21, факс (495) 2

rgab.ru Берг АБ bergab@ya.ru Тел. (495)-228-06-21, факс (495) 2

Phenolic/fabric

Phenolic/fabric consists of cotton fabric bound with the phermoset plastic phenolic resin. The material is characterized by a very good resistance to heavy loads and high service temperatures (+120 °C).

The cotton fabric has to be developed to function in sealing applications. The fabric should consist of a certain amount of threads per area unit and the fabric layers must be tightly bound to each other. The contents of phenolic resin must be large enough to ensure the bonding between the fabric layers so that particles of fabric or phenolic resin will not come loose during the assembly or at service.

The very good heat resistance of phenolic/fabric guides also implies a better resistance to diesel effects than that of acetal resin guides. The service life of piston seals will therefore increase if they are assembled between guide rings of phenolic/fabric.

The structure of the phenolic/fabric and the ability of the fabric fibres to absorb a certain amount of oil make the guide almost self-lubricating.

Phenolic/fabric is today the dominating guide material for pistons and rods in cylinders designed for medium heavy and heavy duty mobile and industrial hydraulics.

Acetal resin

Acetal resin is a thermoplastic material and is relatively cheap. The material is used both reinforced and non-reinforced.

Glass fibre reinforced acetal resin is the most common material in applications with separate guides for pistons and rods. For integrated guides, however, non-reinforced acetal resin is normally used since these guide rings most often are exposed to both mechanic and hydraulic loads.

Acetal resin has, contrary to phenolic/fabric, the fact in common with other thermoplastic materials, that the hardness and accordingly the load carrying capacity starts decreasing already at 50 to 60 °C.

5

Table 1

Application field, material

Application field	Phenolic/ fabric	Acetal resin	PTFE
Mobile hydraulics	X		
Farming hydraulics		X	
Industrial hydraulics	X	X	X
Process hydraulics			X
Water hydraulics			X
Food industry hydraulics			X
Pneumatics		X	X

rgab.ru Берг АБ bergab@ya.ru Тел. (495)-228-06-21, факс (495) 2

rgab.ru Берг АБ bergab@ya.ru Тел. (495)-228-06-21, факс (495) 2

PTFE

The properties of PTFE exceed the properties of all other known materials when it comes to low friction, the absence of stickslip effects as well as chemical and heat resistance. To obtain optimal wear resistance PTFE materials are used with different kinds of fillers, e.g. bronze or carbon powder.

PTFE materials should only be used in applications with low surface pressures or when the media, temperature, friction or speed do not allow any other material. From a start friction point of view the PTFE materials are superior to all other plastic materials.

Occasionally, it could be an advantage to use guide strips of a PTFE material in combination with guide rings with higher load carrying capacity. The guide strip will then collect contamination particles and prevent them to get in contact with the load carrying guide ring of a harder material, which would cause scratches on the sealing surface, see **fig 2**.

Diagram 1

pv diagram for guide rings of PTFE MS-292 at 70 °C

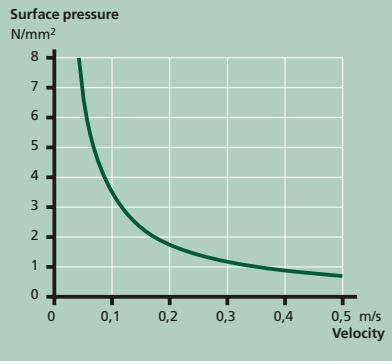

Diagram 2

pv diagram for guide rings of acetal resin at 70 °C

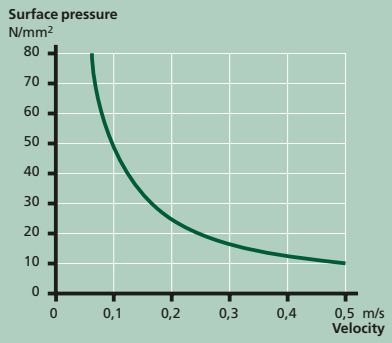

Diagram 3

pv diagram for guide rings of phenolic/fabric at 70 °C

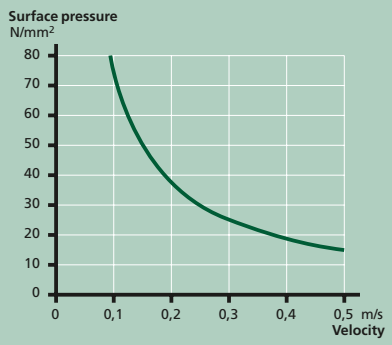

rgab.ru Берг АБ bergab@ya.ru Тел. (495)-228-06-21, факс (495) 2

rgab.ru Берг АБ bergab@ya.ru Тел. (495)-228-06-21, факс (495) 2

Fig **2**

The distance between the rod and piston guide ring must be calculated based on the bending moment

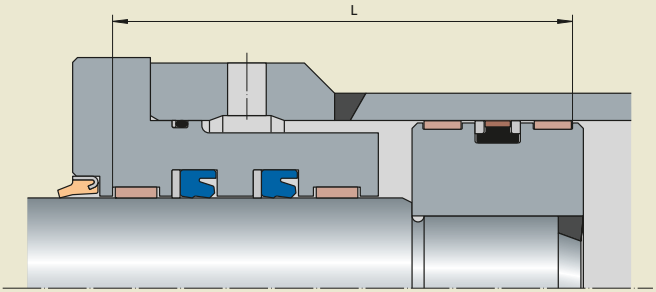

The location of the guide

It is of significant importance that the cylinder in total and its including parts are designed in order to decrease the ability of the piston and rod to move radially at load or pressure changes.

The ability of the seal to meet the demands on sealing capacity, especially in tough cold, and the cylinder's ability to stand buckling loads, are very much depending on the piston and rod retaining a concentric position during the entire stroke. This in turn depends on the combined tolerances of the cylinder bore, the rod, the guide rings' or guide strips' radial widths and housing diameters. The distance between the rod guide and the piston guide must be chosen taking the possible bending moment at tough service conditions into consideration.

Plastic guides have a certain self-lubricating ability and can therefore be installed without any direct oil supply, e.g. between the rod seal and the wiper seal in order to achieve optimal total guide distance, see **fig 3**. In applications where two guide rings for some reason have to be placed close to each other, we recommend separate housing grooves to ensure the oil supply to the seal and to avoid the pressure being trapped between the seal and the guide.

Fig **3**

Guide strips combined with guide rings of phenolic/fabric

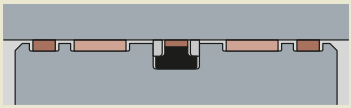

5

rgab.ru Берг АБ bergab@ya.ru Тел. (495)-228-06-21, факс (495) 2

rgab.ru Берг АБ bergab@ya.ru Тел. (495)-228-06-21, факс (495) 22

Table **2**

Material data

Properties	Test method	Unit of measure-ment	Phenolic/ fabric (PF)	Acetal (POM) (with glass fibre)	PTFE MS-292
Density	DIN 53479	g/cm^3	1,14 to 1,15	1,55	3,0 to 3,1
Elasticity module	DIN 7735 DIN 53457	N/mm^2 N/mm^2	$6,5 \times 10^3$ –	– $7,0 \times 10^3$	– $0,4 \times 10^3$ to $1,0 \times 10^3$
Tensile strength	DIN 53455	N/mm^2	60	105	18 to 23
Maximum static surface pressure at 22 °C	DIN 53454	N/mm^2	240	40	25
Deformation at static pressure load					
120 N/mm^2; 22 °C 3 mm wall thickness	–	%	–	≤ 10	–
120 N/mm^2; 22 °C 4 mm wall thickness	–	%	≤ 4,7	–	–
120 N/mm^2; 100 °C 4 mm wall thickness	–	%	≤ 6	–	–
Permanent deformation after 1 min at 120 N/mm^2 pressure load at 22 °C	–	%	2	–	–
Coefficient of heat expansion	DIN 53752	1/K	2×10^{-5}	10×10^{-5}	11×10^{-5}
Expansion in water, 184 h / 80 °C					
length	–	%	≤ 0,35	–	–
circumference radial (across fabric layers)	–	%	≤ 1,8		
Application temperature					
continuous	–	°C	120	90	–60 to +120
short time (30 min)	–	°C	160	110	–60 to +200
Friction coefficient					
lubricated service	–	–	0,08	0,10 to 0,20	0,05 to 0,09
dry service	–	–	0,22	0,30	0,10 to 0,20

rgab.ru Берг АБ bergab@ya.ru Тел. (495)-228-06-21, факс (495) 22

rgab.ru Берг АБ bergab@ya.ru Тел. (495)-228-06-21, факс (495) 22

Table **3**

Material properties and applications

Material code	Colour	Contents	Properties	Application
MS-292	Light brown	PTFE + bronze powder (40 %)	Good heat resistance. Higher load capacity than MS-302 and MS-851.	Light hydraulics. Hard chromium plated piston rods.
MS-302	Black	PTFE + carbon and graphite powder	Good heat and chemical resistance. Mild abrasive, also against relatively soft metals.	Pneumatics, light hydraulics and light water hydraulics (sweet water. Stainless steel, hard anodized aluminium and bronze.
MS-295	Brown	PTFE + bronze powder (60 %)	Good heat resistance. Higher load capacity than MS-292.	Light hydraulics. Hard chromium plated piston rods.
MS-851	Black	PTFE + carbon fibre	Good heat resistance and very good chemical resistance	Pneumatics, light hydraulics and light water hydraulics (sweet water). Stainless steel, hard anodized aluminium and bronze.
PF	Light brown	Phenolic resin + cotton fabric	Good wear resistance. Much higher load capacity than MS-292 and MS-295.	Light hydraulics. Hard chromium plated piston rods and bronze.

rgab.ru Берг АБ bergab@ya.ru Тел. (495)-228-06-21, факс (495) 22

rgab.ru Берг АБ bergab@ya.ru Тел. (495)-228-06-21, факс (495) 2

Calculation of the guide width

Guides for rotating shafts can be calculated presuming that most of the projected guide surface is effective. This is due to the fact that hydrodynamic pressure is created in the lubrication film in the wedge shaped clearance by the relative movement between the shaft and the guide surfaces at the rotation of the shaft. Should this circumstance uncritically be implemented in a hydraulic cylinder the load distribution in the guide would theoretically turn out as shown in **fig 4**.

The conditions at the linear movement in a hydraulic cylinder are, however, much more disadvantageous, especially when using a metal guide. The contact surface is then very narrow and not seldom considerably shorter than the guide width due to the angular adjustment of the piston and rod. Metal guides are therefore much more easily overloaded with damages as a consequence, see **fig 1**, **page 212**, and **fig 5**.

The elastic deformation of plastic materials involves a much larger contact surface and a better utilization of the guide width, see **fig 6**. In order to retain a good safety margin the load carrying guide surface is calculated to represent a maximum of 50 % of the projected bearing surface.

Dynamic forces, acceleration forces, vibrations and angular forces have to be taken into consideration when calculating the transverse forces from the cylinder's link bearings. The calculation of the guide ring housing width (L) for piston and rod guide rings is described below. The effective load carrying width of the guide ring is approx. 2 mm smaller than the housing groove width due to the manufacturing and installation tolerances and the reduction of the guide ring width by the edge radii.

Calculation of a piston guide ring width:

$$L = \frac{F \times f}{p \times D} + 2$$

Calculation of a rod guide ring width:

$$L = \frac{F \times f}{p \times d} + 2$$

Where

L = Guide ring housing width in mm
F = Load in N
f = Safety factor (normally = 2 at max 70 °C[1])
p = Surface pressure in N/mm2 (see pv diagram, **Diagram 1** to **3**, **page 214**)
D = Piston diameter in mm (see pv diagram, **Diagram 1** to **3**, **page 214**)
d = Rod diameter in mm(see pv diagram, **Diagram 1** to **3**, **page 214**)
v = Maximum speed in m/s(see pv diagram, **Diagram 1** to **3**, **page 214**)

Example for the calculation of the width for a 100 mm phenolic/fabric piston guide ring with a 3 mm radial thickness. Service temperature is 70 °C.

F = 30 000 N
f = 2
v = 0,2 m/s
p = 37,5 N/mm^2 (from pv diagram, **Diagram 2**, **page 214**)
D = 100 mm

$$L = \frac{30\,000 \times 2}{37{,}5 \times 100} + 2 = 18$$

Choose 20 mm guide ring housing width (L) which is the nearest larger housing width in accordance to the product tables starting on **page 224**, i.e. PGR 100×94×20-PF.

[1] At temperatures over 70 °C the safety factor (f) must be increased, tentatively to 4. However, at temperatures over 120 °C other guide ring materials must be chosen.

rgab.ru Берг АБ bergab@ya.ru Тел. (495)-228-06-21, факс (495) 2

rgab.ru Берг АБ bergab@ya.ru Тел. (495)-228-06-21, факс (495) 22

Fig **4**

Theoretical load distribution

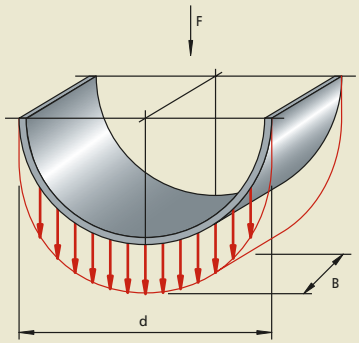

Fig **5**

Load distribution with a metal guide

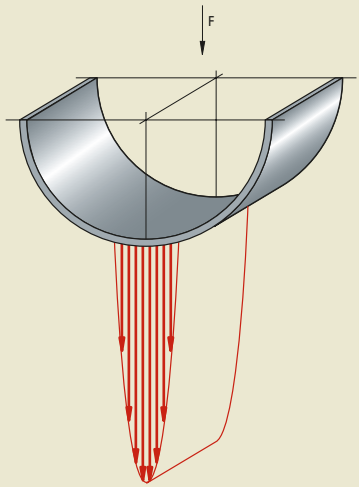

5

Fig **6**

Load distribution with guides of phenolic/fabric

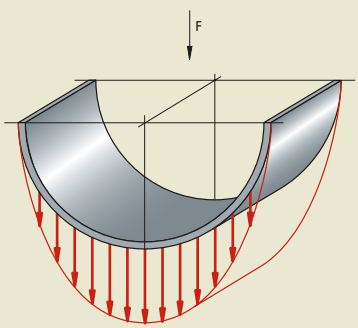

rgab.ru Берг АБ bergab@ya.ru Тел. (495)-228-06-21, факс (495) 22

rgab.ru Берг АБ bergab@ya.ru Тел. (495)-228-06-21, факс (495) 2

Choice of dimensions

Guide rings of phenolic/fabric

Since guide rings of phenolic/fabric are machined from tube blanks the width can be chosen to resist each specific load. The width should, however, if possible be chosen in 5 or 10 mm steps. The width must not be larger than the guide diameter.

In applications demanding large total guide width, e.g. plunge cylinders, the guide should be divided into two or more separate guide rings placed at a certain distance from each other. The width should not be smaller than 0,2 times the guide diameter for rod guides or 0,1 times the guide diameter for piston guides. Furthermore, the width must not be smaller than 4 times the wall thickness (t).

The deformation of phenolic/fabric is very limited, also at heavy loads. In room temperature the deformation is 7 to 8 % at 120 N/mm^2. Despite this we do not recommend to use a larger wall thickness than motivated in order not to make the handling and assembly too difficult. Please find the appropriate wall thickness for each diameter range in **Table 4**.

Table **4**

Wall thickness	
Diameter range	**Wall thickness**
mm	mm
12 – 50	1,5 – 2,0
40 – 280	2,5 – 3,0
160 – 400	4,0
350 – 1 500	5,0

Guide rings of acetal resin

Guide rings of acetal resin are injection moulded which restricts the choice of sizes according to the existing tools. Available sizes are shown in the dimension tables.

Guide strips of PTFE

Guide strips of PTFE are machined and available according to the dimension tables.

Groove design and assembly

All SEALPOOL guide rings have chamfered or rounded edges to fit well in housing grooves with normal fillet radii. This provides a safe function without risks of damaging the edges of the guide rings or high friction caused by wedge action due to the radii of the groove bottom.

SEALPOOL guide rings and guide strips can easily be assembled into closed housing grooves without specific tools.

Groove design instructions with dimensions, tolerances, radii etc can be found in the product tables at each product type.

Groove edges

All groove edges are smoothed and rounded off to R = 0,1 to 0,2 mm.

rgab.ru Берг АБ bergab@ya.ru Тел. (495)-228-06-21, факс (495) 2

rgab.ru Берг АБ bergab@ya.ru Тел. (495)-228-06-21, факс (495) 2

rgab.ru Берг АБ bergab@ya.ru Тел. (495)-228-06-21, факс (495) 2

rgab.ru Берг АБ bergab@ya.ru Тел. (495)-228-06-21, факс (495) 2

Guide ring material comparison

The choice of guide ring material depends on the service conditions of each application. Please see the comparison between guide rings of phenolic/fabric and acetal resin.

Guide rings of phenolic/fabric

Phenolic/fabric materials are used in medium heavy and heavy duty applications, see **fig 7**.

The advantages of guide rings of phenolic/fabric:

- withstand heavy side loads,
- close tolerances,
- wear resistant,
- reduce vibrations,
- prevent particles from reaching the seals,
- do not vulcanize with the contact surface,
- wide size range,
- large application field,
- easy to assemble,
- wide temperature range (–60 to +130 °C), and
- protect components from diesel effects.

Fig 7

Guide rings of phenolic/fabric

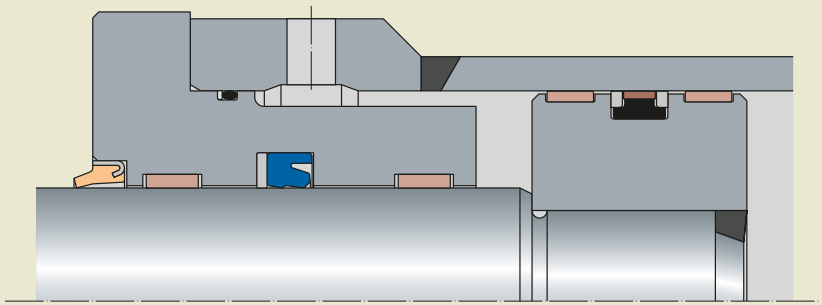

rgab.ru Берг АБ bergab@ya.ru Тел. (495)-228-06-21, факс (495) 2

rgab.ru Берг АБ bergab@ya.ru Тел. (495)-228-06-21, факс (495) 2

Guide rings of acetal resin
Acetal resin materials are used in light and medium heavy duty applications, see **fig 8**.

The advantages of guide rings of acetal resin

- withstand medium heavy side loads,
- wear resistant,
- reduce vibrations,
- prevent particles from reaching the seals,
- do not vulcanize with the contact surface,
- wide dimensional range,
- low price, and
- easy to assemble.

The limitations:

- withstand a maximum temperature of 80 to 90 °C,
- inappropriate in applications with high pressures combined with heavy side loads, and
- not resistant to aggressive chemicals.

Fig **8**

Guide rings of acetal resin

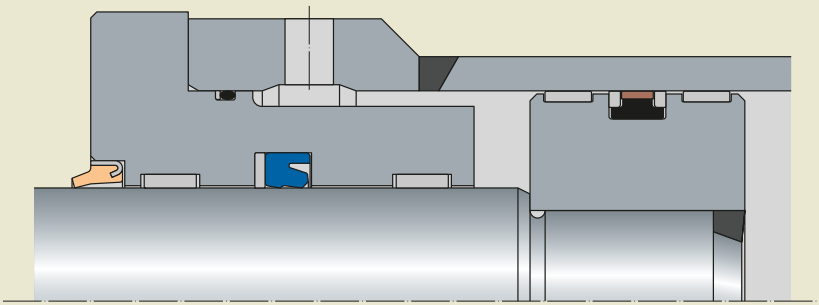

rgab.ru Берг АБ bergab@ya.ru Тел. (495)-228-06-21, факс (495) 2

rgab.ru Берг АБ bergab@ya.ru Тел. (495)-228-06-21, факс (495) 2

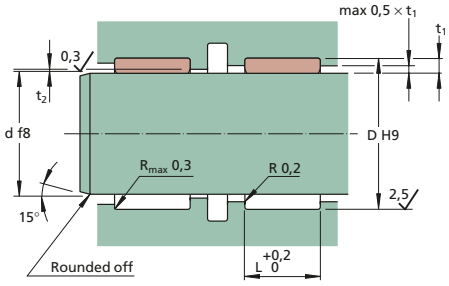

Type RGR .. PF
Guide ring of phenolic/fabric for rod.

The size of the clearance t_2 on the rod seal's zero pressure side, see installation drawing for the used seal type, depends on what the design of the seal in question demands depending on the service conditions, especially temperature and pressure.

The tolerances of the rod diameter and the guide ring housing diameter are normally d f8 and D H9 respectively in order to minimize the guiding clearance.

At rod diameters over 500 mm the tolerances H8 should be considered in order to limit the guiding clearance. When a rod diameter tolerance other than f8 is used, an optimal guide ring housing tolerance must be calculated to obtain about the same guiding clearance character as if the tolerances f8/H9 were used.

At rod diameters smaller than 50 mm a wall thickness of 1,5 to 2 mm should be chosen to enable assembly into closed housing grooves.

Dimensions			Designation
d	D	L	
mm			–
12	15	6,3	**CR RGR 12×15×6.3-PF**
16	19	6	**CR RGR 16×19×6-PF**
	20	10	**CR RGR 16×20×10-PF**
18	21	6	**CR RGR 18×21×6-PF**
	24	10	**CR RGR 18×24×10-PF**
20	23	20	**CR RGR 20×23×20-PF**
	24	20	**CR RGR 20×24×20-PF**
	26	10	**CR RGR 20×26×10-PF**
22	25	10	**CR RGR 22×25×10-PF**
25	28	8	**CR RGR 25×28×8-PF**
	28	10	**CR RGR 25×28×10-PF**
	28	20	**CR RGR 25×28×20-PF**
	29	10	**CR RGR 25×29×10-PF**
	29	20	**CR RGR 25×29×20-PF**
	30	9,7	**CR RGR 25×30×9.7-PF**
	31	10	**CR RGR 25×31×10-PF**
28	31	10	**CR RGR 28×31×10-PF**
	32	10	**CR RGR 28×32×10-PF**
	33	6,3	**CR RGR 28×33×6.3-PF**
	34	10	**CR RGR 28×34×10-PF**
30	34	8	**CR RGR 30×34×8-PF**
	34	10	**CR RGR 30×34×10-PF**
32	35,1	4,2	**CR RGR 32×35.1×4.2-PF**
	36	10	**CR RGR 32×36×10-PF**
	36	15	**CR RGR 32×36×15-PF**
	36	20	**CR RGR 32×36×20-PF**
	38	10	**CR RGR 32×38×10-PF**
35	38	10	**CR RGR 35×38×10-PF**
	39	20	**CR RGR 35×39×20-PF**
	41	10	**CR RGR 35×41×10-PF**

Dimensions			Designation
d	D	L	
mm			–
36	40	10	**CR RGR 36×40×10-PF**
	40	20	**CR RGR 36×40×20-PF**
	40	30	**CR RGR 36×40×30-PF**
	41	6,3	**CR RGR 36×41×6.3-PF**
	42	10	**CR RGR 36×42×10-PF**
40	44	10	**CR RGR 40×44×10-PF**
	44	12	**CR RGR 40×44×12-PF**
	44	20	**CR RGR 40×44×20-PF**
	44	25	**CR RGR 40×44×25-PF**
	44	35	**CR RGR 40×44×35-PF**
	45	9,7	**CR RGR 40×45×9.7-PF**
	45	25	**CR RGR 40×45×25-PF**
	46	10	**CR RGR 40×46×10-PF**
	46	15	**CR RGR 40×46×15-PF**
	46	20	**CR RGR 40×46×20-PF**
	46	25	**CR RGR 40×46×25-PF**
45	49	12	**CR RGR 45×49×12-PF**
	49	15	**CR RGR 45×49×15-PF**
	50	9,7	**CR RGR 45×50×9.7-PF**
	51	13	**CR RGR 45×51×13-PF**
	51	20	**CR RGR 45×51×20-PF**
	51	40	**CR RGR 45×51×40-PF**
48	54	25	**CR RGR 48×54×25-PF**
50	54	12	**CR RGR 50×54×12-PF**
	55	6,3	**CR RGR 50×55×6.3-PF**
	55	9,7	**CR RGR 50×55×9.7-PF**
	55	15	**CR RGR 50×55×15-PF**
	56	13	**CR RGR 50×56×13-PF**
	56	20	**CR RGR 50×56×20-PF**
	56	25	**CR RGR 50×56×25-PF**
	56	30	**CR RGR 50×56×30-PF**
55	61	16	**CR RGR 55×61×16-PF**
	61	25	**CR RGR 55×61×25-PF**
	62	13	**CR RGR 55×62×13-PF**

rgab.ru Берг АБ bergab@ya.ru Тел. (495)-228-06-21, факс (495) 2

rgab.ru Берг АБ bergab@ya.ru Тел. (495)-228-06-21, факс (495) 22

Dimensions			Designation
d	D	L	
mm			–
56	62	16	**CR RGR 56×62×16-PF**
	62	20	**CR RGR 56×62×20-PF**
	62	30	**CR RGR 56×62×30-PF**
	62	40	**CR RGR 56×62×40-PF**
60	65	15	**CR RGR 60×65×15-PF**
	66	13	**CR RGR 60×66×13-PF**
	66	20	**CR RGR 60×66×20-PF**
	66	30	**CR RGR 60×66×30-PF**
	66	40	**CR RGR 60×66×40-PF**
	68	55	**CR RGR 60×68×55-PF**
63	67	20	**CR RGR 63×67×20-PF**
	68	9,7	**CR RGR 63×68×9.7-PF**
	68	15	**CR RGR 63×68×15-PF**
	69	13	**CR RGR 63×69×13-PF**
	69	18	**CR RGR 63×69×18-PF**
	69	20	**CR RGR 63×69×20-PF**
	69	30	**CR RGR 63×69×30-PF**
	69	35	**CR RGR 63×69×35-PF**
	69	40	**CR RGR 63×69×40-PF**
	69	50,8	**CR RGR 63×69×50.8-PF**
65	69	15	**CR RGR 65×69×15-PF**
	70	30	**CR RGR 65×70×30-PF**
	71	13	**CR RGR 65×71×13-PF**
	71	40	**CR RGR 65×71×40-PF**
70	75	9,7	**CR RGR 70×75×9.7-PF**
	75	15	**CR RGR 70×75×15-PF**
	76	13	**CR RGR 70×76×13-PF**
	76	20	**CR RGR 70×76×20-PF**
	76	30	**CR RGR 70×76×30-PF**
	76	40	**CR RGR 70×76×40-PF**
	76	50	**CR RGR 70×76×50-PF**
75	79	9,7	**CR RGR 75×79×9.7-PF**
	80	25	**CR RGR 75×80×25-PF**
	81	13	**CR RGR 75×81×13-PF**
	81	20	**CR RGR 75×81×20-PF**
	81	25	**CR RGR 75×81×25-PF**
	81	30	**CR RGR 75×81×30-PF**

Dimensions			Designation
d	D	L	
mm			–
78	84	13	**CR RGR 78×84×13-PF**
80	85	9,7	**CR RGR 80×85×9.7-PF**
	85	15	**CR RGR 80×85×15-PF**
	86	13	**CR RGR 80×86×13-PF**
	86	20	**CR RGR 80×86×20-PF**
	86	25	**CR RGR 80×86×25-PF**
	86	30	**CR RGR 80×86×30-PF**
	86	35	**CR RGR 80×86×35-PF**
	86	40	**CR RGR 80×86×40-PF**
	86	50	**CR RGR 80×86×50-PF**
	86	63,5	**CR RGR 80×86×63.5-PF**
	88	70	**CR RGR 80×88×70-PF**
85	91	20	**CR RGR 85×91×20-PF**
	91	25	**CR RGR 85×91×25-PF**
	91	40	**CR RGR 85×91×40-PF**
90	96	13	**CR RGR 90×96×13-PF**
	96	20	**CR RGR 90×96×20-PF**
	96	25	**CR RGR 90×96×25-PF**
	96	30	**CR RGR 90×96×30-PF**
	96	40	**CR RGR 90×96×40-PF**
	96	60	**CR RGR 90×96×60-PF**
	98	65	**CR RGR 90×98×65-PF**
95	99	25	**CR RGR 95×99×25-PF**
100	105	15	**CR RGR 100×105×15-PF**
	106	13	**CR RGR 100×106×13-PF**
	106	25	**CR RGR 100×106×25-PF**
	106	30	**CR RGR 100×106×30-PF**
	106	40	**CR RGR 100×106×40-PF**
	106	50	**CR RGR 100×106×50-PF**
105	111	18	**CR RGR 105×111×18-PF**
	111	20	**CR RGR 105×111×20-PF**

rgab.ru Берг АБ bergab@ya.ru Тел. (495)-228-06-21, факс (495) 22

rgab.ru Берг АБ bergab@ya.ru Тел. (495)-228-06-21, факс (495) 22

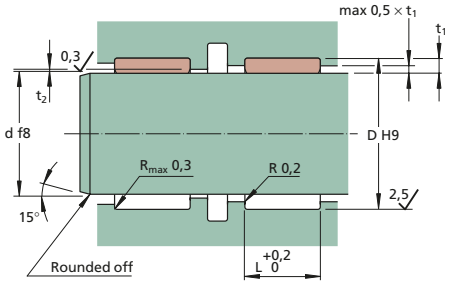

Type RGR .. PF
Guide ring of phenolic/fabric for rod.

The size of the clearance t_2 on the rod seal's zero pressure side, see installation drawing for the used seal type, depends on what the design of the seal in question demands depending on the service conditions, especially temperature and pressure.

The tolerances of the rod diameter and the guide ring housing diameter are normally d f8 and D H9 respectively in order to minimize the guiding clearance.

At rod diameters over 500 mm the tolerances H8 should be considered in order to limit the guiding clearance. When a rod diameter tolerance other than f8 is used, an optimal guide ring housing tolerance must be calculated to obtain about the same guiding clearance character as if the tolerances f8/H9 were used.

At rod diameters smaller than 50 mm a wall thickness of 1,5 to 2 mm should be chosen to enable assembly into closed housing grooves.

Dimensions			Designation
d	D	L	
mm			–
110	116	13	**CR RGR 110×116×13-PF**
	116	20	**CR RGR 110×116×20-PF**
	116	30	**CR RGR 110×116×30-PF**
	116	40	**CR RGR 110×116×40-PF**
	116	50	**CR RGR 110×116×50-PF**
115	121	20	**CR RGR 115×121×20-PF**
120	126	13	**CR RGR 120×126×13-PF**
	126	40	**CR RGR 120×126×40-PF**
	126	50	**CR RGR 120×126×50-PF**
125	131	13	**CR RGR 125×131×13-PF**
	131	20	**CR RGR 125×131×20-PF**
	131	25	**CR RGR 125×131×25-PF**
	131	30	**CR RGR 125×131×30-PF**
	131	40	**CR RGR 125×131×40-PF**
	131	50	**CR RGR 125×131×50-PF**
	133	20	**CR RGR 125×133×20-PF**
	133	30	**CR RGR 125×133×30-PF**
	133	45	**CR RGR 125×133×45-PF**
	133	60	**CR RGR 125×133×60-PF**
127	133	13	**CR RGR 127×133×13-PF**
130	134	15	**CR RGR 130×134×15-PF**
	136	30	**CR RGR 130×136×30-PF**
	136	50	**CR RGR 130×136×50-PF**
	140	40	**CR RGR 130×140×40-PF**
135	141	90	**CR RGR 135×141×90-PF**
140	146	13	**CR RGR 140×146×13-PF**
	146	25	**CR RGR 140×146×25-PF**
	146	30	**CR RGR 140×146×30-PF**
	146	35	**CR RGR 140×146×35-PF**
	146	40	**CR RGR 140×146×40-PF**
	146	50	**CR RGR 140×146×50-PF**
	146	60	**CR RGR 140×146×60-PF**
	148	50	**CR RGR 140×148×50-PF**

Dimensions			Designation
d	D	L	
mm			–
150	156	20	**CR RGR 150×156×20-PF**
	156	30	**CR RGR 150×156×30-PF**
	156	40	**CR RGR 150×156×40-PF**
	158	35	**CR RGR 150×158×35-PF**
	158	40	**CR RGR 150×158×40-PF**
155	161	19,5	**CR RGR 155×161×19.5-PF**
160	166	13	**CR RGR 160×166×13-PF**
	166	25	**CR RGR 160×166×25-PF**
	166	30	**CR RGR 160×166×30-PF**
	168	20	**CR RGR 160×168×20-PF**
	168	30	**CR RGR 160×168×30-PF**
	168	40	**CR RGR 160×168×40-PF**
	168	80	**CR RGR 160×168×80-PF**
165	173	20	**CR RGR 165×173×20-PF**
170	176	40	**CR RGR 170×176×40-PF**
	176	50	**CR RGR 170×176×50-PF**
	180	50	**CR RGR 170×180×50-PF**
175	181	40	**CR RGR 175×181×40-PF**
	181	90	**CR RGR 175×181×90-PF**
180	185	9,7	**CR RGR 180×185×9.7-PF**
	186	19,5	**CR RGR 180×186×19.5-PF**
	186	25	**CR RGR 180×186×25-PF**
	186	40	**CR RGR 180×186×40-PF**
	186	50	**CR RGR 180×186×50-PF**
	188	30	**CR RGR 180×188×30-PF**
	188	50	**CR RGR 180×188×50-PF**
	188	80	**CR RGR 180×188×80-PF**
190	198	40	**CR RGR 190×198×40-PF**
	198	60	**CR RGR 190×198×60-PF**
195	203	25	**CR RGR 195×203×25-PF**

rgab.ru Берг АБ bergab@ya.ru Тел. (495)-228-06-21, факс (495) 22

rgab.ru Берг АБ bergab@ya.ru Тел. (495)-228-06-21, факс (495) 22

Dimensions			Designation
d	D	L	
mm			–
200	205	15	**CR RGR 200×205×15-PF**
	206	19,5	**CR RGR 200×206×19.5-PF**
	208	20	**CR RGR 200×208×20-PF**
	208	30	**CR RGR 200×208×30-PF**
	208	40	**CR RGR 200×208×40-PF**
	208	50	**CR RGR 200×208×50-PF**
	210	35	**CR RGR 200×210×35-PF**
205	210	25	**CR RGR 205×210×25-PF**
	213	65	**CR RGR 205×213×65-PF**
210	218	25	**CR RGR 210×218×25-PF**
	218	35	**CR RGR 210×218×35-PF**
	220	15	**CR RGR 210×220×15-PF**
	220	50	**CR RGR 210×220×50-PF**
	220	60	**CR RGR 210×220×60-PF**
220	226	60	**CR RGR 220×226×60-PF**
	226	63,5	**CR RGR 220×226×63.5-PF**
	228	20	**CR RGR 220×228×20-PF**
	228	50	**CR RGR 220×228×50-PF**
	228	80	**CR RGR 220×228×80-PF**
230	236	30	**CR RGR 230×236×30-PF**
	238	60	**CR RGR 230×238×60-PF**
	238	110	**CR RGR 230×238×110-PF**
235	243	30	**CR RGR 235×243×30-PF**
240	248	30	**CR RGR 240×248×30-PF**
	248	60	**CR RGR 240×248×60-PF**
	250	60	**CR RGR 240×250×60-PF**
250	258	30	**CR RGR 250×258×30-PF**
	258	40	**CR RGR 250×258×40-PF**
	258	45	**CR RGR 250×258×45-PF**
	258	60	**CR RGR 250×258×60-PF**
	258	65	**CR RGR 250×258×65-PF**
	258	80	**CR RGR 250×258×80-PF**

Dimensions			Designation
d	D	L	
mm			–
260	265	25	**CR RGR 260×265×25-PF**
	266	40	**CR RGR 260×266×40-PF**
	268	40	**CR RGR 260×268×40-PF**
	270	70	**CR RGR 260×270×70-PF**
265	270	25	**CR RGR 265×270×25-PF**
270	280	100	**CR RGR 270×280×100-PF**
275	283	56	**CR RGR 275×283×56-PF**
	283	70	**CR RGR 275×283×70-PF**
280	286	19,5	**CR RGR 280×286×19.5-PF**
	288	25	**CR RGR 280×288×25-PF**
	288	30	**CR RGR 280×288×30-PF**
	288	50	**CR RGR 280×288×50-PF**
	288	80	**CR RGR 280×288×80-PF**
290	295	9,7	**CR RGR 290×295×9.7-PF**
	298	60	**CR RGR 290×298×60-PF**
300	308	30	**CR RGR 300×308×30-PF**
	308	40	**CR RGR 300×308×40-PF**
	308	50	**CR RGR 300×308×50-PF**
	308	80	**CR RGR 300×308×80-PF**
315	323	70	**CR RGR 315×323×70-PF**
320	328	50	**CR RGR 320×328×50-PF**
	328	70	**CR RGR 320×328×70-PF**
340	348	50	**CR RGR 340×348×50-PF**
	350	100	**CR RGR 340×350×100-PF**
350	358	45	**CR RGR 350×358×45-PF**
	358	55	**CR RGR 350×358×55-PF**
360	365	25	**CR RGR 360×365×25-PF**
	368	40	**CR RGR 360×368×40-PF**
	368	55	**CR RGR 360×368×55-PF**
	370	100	**CR RGR 360×370×100-PF**

rgab.ru Берг АБ bergab@ya.ru Тел. (495)-228-06-21, факс (495) 22

rgab.ru Берг АБ bergab@ya.ru Тел. (495)-228-06-21, факс (495) 22

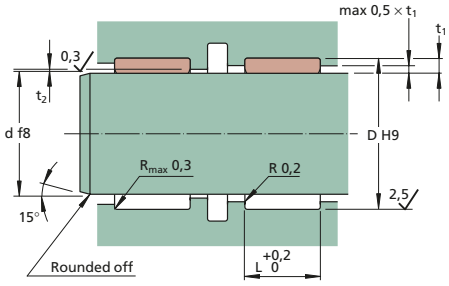

Type RGR .. PF
Guide ring of phenolic/fabric for rod.

The size of the clearance t_2 on the rod seal's zero pressure side, see installation drawing for the used seal type, depends on what the design of the seal in question demands depending on the service conditions, especially temperature and pressure.

The tolerances of the rod diameter and the guide ring housing diameter are normally d f8 and D H9 respectively in order to minimize the guiding clearance.

At rod diameters over 500 mm the tolerances H8 should be considered in order to limit the guiding clearance. When a rod diameter tolerance other than f8 is used, an optimal guide ring housing tolerance must be calculated to obtain about the same guiding clearance character as if the tolerances f8/H9 were used.

At rod diameters smaller than 50 mm a wall thickness of 1,5 to 2 mm should be chosen to enable assembly into closed housing grooves.

Dimensions			Designation
d	D	L	
mm			–
370	376	30	**CR RGR 370×376×30-PF**
380	388	80	**CR RGR 380×388×80-PF**
400	408	50	**CR RGR 400×408×50-PF**
	410	30	**CR RGR 400×410×30-PF**
420	428	70	**CR RGR 420×428×70-PF**
460	468	50	**CR RGR 460×468×50-PF**
	470	65	**CR RGR 460×470×65-PF**
	470	90	**CR RGR 460×470×90-PF**
490	496	30	**CR RGR 490×496×30-PF**
520	528	40	**CR RGR 520×528×40-PF**
570	580	80	**CR RGR 570×580×80-PF**
600	610	80	**CR RGR 600×610×80-PF**
640	650	30	**CR RGR 640×650×30-PF**
	650	80	**CR RGR 640×650×80-PF**
650	660	75	**CR RGR 650×660×75-PF**
700	710	80	**CR RGR 700×710×80-PF**
800	810	30	**CR RGR 800×810×30-PF**

rgab.ru Берг АБ bergab@ya.ru Тел. (495)-228-06-21, факс (495) 22

rgab.ru Берг АБ bergab@ya.ru Тел. (495)-228-06-21, факс (495) 2

rgab.ru Берг АБ bergab@ya.ru Тел. (495)-228-06-21, факс (495) 2

rgab.ru Берг АБ bergab@ya.ru Тел. (495)-228-06-21, факс (495) 22

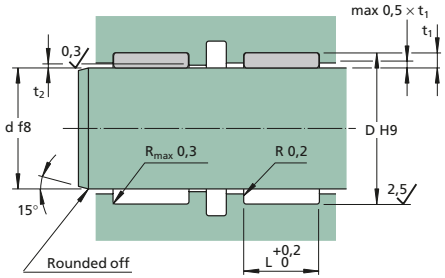

Type RGR .. A
Guide ring of acetal resin for rod.

The size of the clearance t_2 on the rod seal's zero pressure side(s), see installation drawing for the used seal type, depends on what the design of the seal in question demands depending on the service conditions, especially temperature and pressure.

The tolerances of the rod diameter and the guide ring housing diameter are normally d f8 and D H9 respectively in order to minimize the guiding clearance.

At rod diameters over 500 mm the tolerance H8 should be considered in order to limit the guiding clearance. When a rod diameter tolerance other than f8 is used, an optimal guide ring housing tolerance must be calculated to obtain about the same guiding clearance character as if the tolerances f8/H9 were used.

At rod diameters smaller than 50 mm, a wall thickness of 1,5 to 2 mm should be chosen to enable assembly into closed housing grooves.

At bore diameters smaller than 50 mm a wall thickness of 1,5 to 2 mm should be chosen.

Dimensions			Designation
d	D	L	
mm			–
16	20	10	**CR RGR 16×20×10-A**
20	24	10	**CR RGR 20×24×10-A**
	26	10	**CR RGR 20×26×10-A**
22	25	4,2	**CR RGR 22×25×4.2-A**
25	29	5	**CR RGR 25×29×5-A**
	29	10	**CR RGR 25×29×10-A**
	31	10	**CR RGR 25×31×10-A**
28	32	10	**CR RGR 28×32×10-A**
	34	10	**CR RGR 28×34×10-A**
30	34	10	**CR RGR 30×34×10-A**
	36	10	**CR RGR 30×36×10-A**
32	36	10	**CR RGR 32×36×10-A**
	38	10	**CR RGR 32×38×10-A**
33	39	10	**CR RGR 33×39×10-A**
35	39	10	**CR RGR 35×39×10-A**
	41	10	**CR RGR 35×41×10-A**
	41	13	**CR RGR 35×41×13-A**
	41	20	**CR RGR 35×41×20-A**
36	40	10	**CR RGR 36×40×10-A**
	42	10	**CR RGR 36×42×10-A**
40	44	10	**CR RGR 40×44×10-A**
	45	5	**CR RGR 40×45×5-A**
	45	9,7	**CR RGR 40×45×9.7-A**
	46	10	**CR RGR 40×46×10-A**
	46	13	**CR RGR 40×46×13-A**
45	50	15	**CR RGR 45×50×15-A**
	51	10	**CR RGR 45×51×10-A**
	51	13	**CR RGR 45×51×13-A**
50	56	10	**CR RGR 50×56×10-A**
	56	13	**CR RGR 50×56×13-A**

Dimensions			Designation
d	D	L	
mm			–
55	59	7,7	**CR RGR 55×59×7.7-A**
	61	10	**CR RGR 55×61×10-A**
	61	13	**CR RGR 55×61×13-A**
56	62	13	**CR RGR 56×62×13-A**
60	65	30	**CR RGR 60×65×30-A**
	66	10	**CR RGR 60×66×10-A**
	66	13	**CR RGR 60×66×13-A**
63	69	13	**CR RGR 63×69×13-A**
65	71	13	**CR RGR 65×71×13-A**
70	76	13	**CR RGR 70×76×13-A**
	76	19,5	**CR RGR 70×76×19.5-A**
75	79	7,7	**CR RGR 75×79×7.7-A**
	81	13	**CR RGR 75×81×13-A**
	81	19,5	**CR RGR 75×81×19.5-A**
80	86	13	**CR RGR 80×86×13-A**
	86	20	**CR RGR 80×86×20-A**
	86	25	**CR RGR 80×86×25-A**
85	91	13	**CR RGR 85×91×13-A**
90	96	13	**CR RGR 90×96×13-A**
95	99	7,7	**CR RGR 95×99×7.7-A**
	101	13	**CR RGR 95×101×13-A**
100	106	13	**CR RGR 100×106×13-A**
105	111	13	**CR RGR 105×111×13-A**
110	116	13	**CR RGR 110×116×13-A**
113	117	7,7	**CR RGR 113×117×7.7-A**
120	126	13	**CR RGR 120×126×13-A**

rgab.ru Берг АБ bergab@ya.ru Тел. (495)-228-06-21, факс (495) 22

rgab.ru Берг АБ bergab@ya.ru Тел. (495)-228-06-21, факс (495) 22

Dimensions			Designation
d	D	L	
mm			–
125	131	13	**CR RGR 125×131×13-A**
130	136	13	**CR RGR 130×136×13-A**
132	136	7,7	**CR RGR 132×136×7.7-A**
140	146	13	**CR RGR 140×146×13-A**
150	156	19,5	**CR RGR 150×156×19.5-A**
160	166	19,5	**CR RGR 160×166×19.5-A**
180	186	19,5	**CR RGR 180×186×19.5-A**
200	206	19,5	**CR RGR 200×206×19.5-A**
220	226	19,5	**CR RGR 220×226×19.5-A**

Dimensions				Designation
D	d	L	D_1	
mm				–

5

rgab.ru Берг АБ bergab@ya.ru Тел. (495)-228-06-21, факс (495) 22

rgab.ru Берг АБ bergab@ya.ru Тел. (495)-228-06-21, факс (495) 2

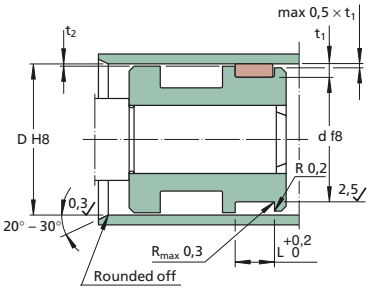

Type PGR .. PF
Guide ring of phenolic/fabric for piston.

The size of the clearance t_2 on the piston seal's zero pressure side(s), see installation drawing for the used seal type, depends on what the design of the seal in question demands depending on the service conditions, especially temperature and pressure.

The tolerances of the cylinder bore diameter and the guide ring housing diameter are normally d f8 and D H9 respectively in order to minimize the guiding clearance.

At cylinder tube diameters over 250 mm the tolerance H8 should be considered and the guide ring housing diameter tolerance should be max –0,15 mm based on the nominal diameter.

At bore diameters smaller than 50 mm a wall thickness of 1,5 to 2 mm should be chosen.

Dimensions			Designation
D	d	L	
mm			–
35	29	10	**CR PGR 35×29×10-PF**
36	33	6,3	**CR PGR 36×33×6.3-PF**
40	33	10	**CR PGR 40×33×10-PF**
	34	10	**CR PGR 40×34×10-PF**
	35	9,7	**CR PGR 40×35×9.7-PF**
45	39	10	**CR PGR 45×39×10-PF**
	41	5	**CR PGR 45×41×5-PF**
	41	12	**CR PGR 45×41×12-PF**
50	44	10	**CR PGR 50×44×10-PF**
	44	30	**CR PGR 50×44×30-PF**
	45	6,3	**CR PGR 50×45×6.3-PF**
	45	9,7	**CR PGR 50×45×9.7-PF**
	45	20	**CR PGR 50×45×20-PF**
	46	12	**CR PGR 50×46×12-PF**
55	50	25	**CR PGR 55×50×25-PF**
60	54	13	**CR PGR 60×54×13-PF**
	54	20	**CR PGR 60×54×20-PF**
	55	6,3	**CR PGR 60×55×6.3-PF**
63	57	13	**CR PGR 63×57×13-PF**
	58	9,7	**CR PGR 63×58×9.7-PF**
	58	6,3	**CR PGR 63×58×6.3-PF**
65	59	15	**CR PGR 65×59×15-PF**
70	62	12	**CR PGR 70×62×12-PF**
	64	13	**CR PGR 70×64×13-PF**
	64	18	**CR PGR 70×64×18-PF**
	64	20	**CR PGR 70×64×20-PF**
	65	9,7	**CR PGR 70×65×9.7-PF**
	65	20	**CR PGR 70×65×20-PF**
75	67	12	**CR PGR 75×67×12-PF**
	69	25	**CR PGR 75×69×25-PF**
	70	9,7	**CR PGR 75×70×9.7-PF**
	71	15	**CR PGR 75×71×15-PF**

Dimensions			Designation
D	d	L	
mm			–
80	72	12	**CR PGR 80×72×12-PF**
	74	13	**CR PGR 80×74×13-PF**
	74	15	**CR PGR 80×74×15-PF**
	74	20	**CR PGR 80×74×20-PF**
	74	25	**CR PGR 80×74×25-PF**
	75	15	**CR PGR 80×75×15-PF**
	75	9,7	**CR PGR 80×75×9.7-PF**
85	79	13	**CR PGR 85×79×13-PF**
	79	30	**CR PGR 85×79×30-PF**
90	84	10	**CR PGR 90×84×10-PF**
	84	13	**CR PGR 90×84×13-PF**
	84	20	**CR PGR 90×84×20-PF**
	84	40	**CR PGR 90×84×40-PF**
	85	9,7	**CR PGR 90×85×9.7-PF**
95	89	13	**CR PGR 95×89×13-PF**
100	92	15	**CR PGR 100×92×15-PF**
	94	13	**CR PGR 100×94×13-PF**
	94	20	**CR PGR 100×94×20-PF**
	94	25	**CR PGR 100×94×25-PF**
	94	40	**CR PGR 100×94×40-PF**
	95	9,7	**CR PGR 100×95×9.7-PF**
	95	15	**CR PGR 100×95×15-PF**
110	104	10	**CR PGR 110×104×10-PF**
	104	13	**CR PGR 110×104×13-PF**
	104	16	**CR PGR 110×104×16-PF**
	104	40	**CR PGR 110×104×40-PF**
	105	9,7	**CR PGR 110×105×9.7-PF**
	105	15	**CR PGR 110×105×15-PF**
115	109	25	**CR PGR 115×109×25-PF**

rgab.ru Берг АБ bergab@ya.ru Тел. (495)-228-06-21, факс (495) 2

rgab.ru Берг АБ bergab@ya.ru Тел. (495)-228-06-21, факс (495) 22

Dimensions			Designation
D	d	L	
mm			–
120	114	13	**CR PGR 120×114×13-PF**
	114	19,5	**CR PGR 120×114×19.5-PF**
	114	20	**CR PGR 120×114×20-PF**
	114	40	**CR PGR 120×114×40-PF**
	115	9,7	**CR PGR 120×115×9.7-PF**
	115	15	**CR PGR 120×115×15-PF**
	116	6,3	**CR PGR 120×116×6.3-PF**
125	119	13	**CR PGR 125×119×13-PF**
	119	15	**CR PGR 125×119×15-PF**
	119	20	**CR PGR 125×119×20-PF**
	119	25	**CR PGR 125×119×25-PF**
	119	35	**CR PGR 125×119×35-PF**
	119	40	**CR PGR 125×119×40-PF**
	120	9,7	**CR PGR 125×120×9.7-PF**
130	124	30	**CR PGR 130×124×30-PF**
	125	40	**CR PGR 130×125×40-PF**
135	129	13	**CR PGR 135×129×13-PF**
140	132	32	**CR PGR 140×132×32-PF**
	133	17	**CR PGR 140×133×17-PF**
	134	13	**CR PGR 140×134×13-PF**
	134	20	**CR PGR 140×134×20-PF**
	134	25	**CR PGR 140×134×25-PF**
	134	30	**CR PGR 140×134×30-PF**
	134	40	**CR PGR 140×134×40-PF**
	135	15	**CR PGR 140×135×15-PF**
145	139	30	**CR PGR 145×139×30-PF**
150	144	13	**CR PGR 150×144×13-PF**
	144	20	**CR PGR 150×144×20-PF**
	144	25	**CR PGR 150×144×25-PF**
	144	30	**CR PGR 150×144×30-PF**
	144	40	**CR PGR 150×144×40-PF**
	145	15	**CR PGR 150×145×15-PF**

Dimensions			Designation
D	d	L	
mm			–
160	153	27	**CR PGR 160×153×27-PF**
	154	13	**CR PGR 160×154×13-PF**
	154	15	**CR PGR 160×154×15-PF**
	154	19,5	**CR PGR 160×154×19.5-PF**
	154	20	**CR PGR 160×154×20-PF**
	154	25	**CR PGR 160×154×25-PF**
	154	30	**CR PGR 160×154×30-PF**
	154	35	**CR PGR 160×154×35-PF**
	154	40	**CR PGR 160×154×40-PF**
	154	50	**CR PGR 160×154×50-PF**
	155	15	**CR PGR 160×155×15-PF**
165	157	60	**CR PGR 165×157×60-PF**
170	160	20	**CR PGR 170×160×20-PF**
	164	19,5	**CR PGR 170×164×19.5-PF**
	164	20	**CR PGR 170×164×20-PF**
	164	30	**CR PGR 170×164×30-PF**
180	172	25	**CR PGR 180×172×25-PF**
	172	40	**CR PGR 180×172×40-PF**
	174	13	**CR PGR 180×174×13-PF**
	174	19,5	**CR PGR 180×174×19.5-PF**
	174	20	**CR PGR 180×174×20-PF**
	174	30	**CR PGR 180×174×30-PF**
	174	40	**CR PGR 180×174×40-PF**
	175	10	**CR PGR 180×175×10-PF**
	175	25	**CR PGR 180×175×25-PF**
190	184	30	**CR PGR 190×184×30-PF**
	184	40	**CR PGR 190×184×40-PF**
	184	90	**CR PGR 190×184×90-PF**

rgab.ru Берг АБ bergab@ya.ru Тел. (495)-228-06-21, факс (495) 22

rgab.ru Берг АБ bergab@ya.ru Тел. (495)-228-06-21, факс (495) 2

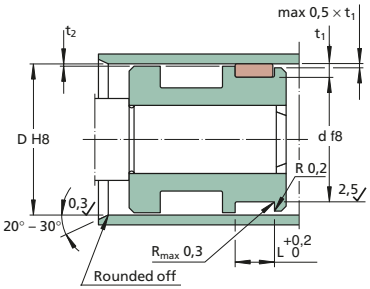

Type PGR .. PF
Guide ring of phenolic/fabric for piston.

The size of the clearance t_2 on the piston seal's zero pressure side(s), see installation drawing for the used seal type, depends on what the design of the seal in question demands depending on the service conditions, especially temperature and pressure.

The tolerances of the cylinder bore diameter and the guide ring housing diameter are normally d f8 and D H9 respectively in order to minimize the guiding clearance.

At cylinder tube diameters over 250 mm the tolerance H8 should be considered and the guide ring housing diameter tolerance should be max –0,15 mm based on the nominal diameter.

At bore diameters smaller than 50 mm a wall thickness of 1,5 to 2 mm should be chosen.

Dimensions			Designation
D	d	L	
mm			–
200	192	30	**CR PGR 200×192×30-PF**
	192	40	**CR PGR 200×192×40-PF**
	194	15	**CR PGR 200×194×15-PF**
	194	19,5	**CR PGR 200×194×19.5-PF**
	194	20	**CR PGR 200×194×20-PF**
	194	25	**CR PGR 200×194×25-PF**
	194	30	**CR PGR 200×194×30-PF**
	194	40	**CR PGR 200×194×40-PF**
	194	50	**CR PGR 200×194×50-PF**
	195	15	**CR PGR 200×195×15-PF**
210	205	9,7	**CR PGR 210×205×9.7-PF**
220	212	20	**CR PGR 220×212×20-PF**
	212	30	**CR PGR 220×212×30-PF**
	214	19,5	**CR PGR 220×214×19.5-PF**
	214	25	**CR PGR 220×214×25-PF**
	214	30	**CR PGR 220×214×30-PF**
	214	40	**CR PGR 220×214×40-PF**
	214	50	**CR PGR 220×214×50-PF**
230	222	30	**CR PGR 230×222×30-PF**
	222	50	**CR PGR 230×222×50-PF**
	224	30	**CR PGR 230×224×30-PF**
235	229	30	**CR PGR 235×229×30-PF**
250	240	46	**CR PGR 250×240×46-PF**
	242	25	**CR PGR 250×242×25-PF**
	242	30	**CR PGR 250×242×30-PF**
	242	40	**CR PGR 250×242×40-PF**
	242	60	**CR PGR 250×242×60-PF**
	244	19,5	**CR PGR 250×244×19.5-PF**
	244	35	**CR PGR 250×244×35-PF**
	244	40	**CR PGR 250×244×40-PF**
	244	50	**CR PGR 250×244×50-PF**
260	254	30	**CR PGR 260×254×30-PF**
270	262	30	**CR PGR 270×262×30-PF**
	262	40	**CR PGR 270×262×40-PF**

Dimensions			Designation
D	d	L	
mm			–
280	270	60	**CR PGR 280×270×60-PF**
	272	20	**CR PGR 280×272×20-PF**
	272	30	**CR PGR 280×272×30-PF**
	272	50	**CR PGR 280×272×50-PF**
	274	19,5	**CR PGR 280×274×19.5-PF**
	274	40	**CR PGR 280×274×40-PF**
285	277	60	**CR PGR 285×277×60-PF**
290	282	25	**CR PGR 290×282×25-PF**
300	292	20	**CR PGR 300×292×20-PF**
	292	30	**CR PGR 300×292×30-PF**
	292	35	**CR PGR 300×292×35-PF**
	292	40	**CR PGR 300×292×40-PF**
	294	19	**CR PGR 300×294×19-PF**
	295	25	**CR PGR 300×295×25-PF**
	295	70	**CR PGR 300×295×70-PF**
320	312	25	**CR PGR 320×312×25-PF**
	312	40	**CR PGR 320×312×40-PF**
	312	60	**CR PGR 320×312×60-PF**
	312	80	**CR PGR 320×312×80-PF**
330	320	70	**CR PGR 330×320×70-PF**
340	332	20	**CR PGR 340×332×20-PF**
360	350	35	**CR PGR 360×350×35-PF**
	350	90	**CR PGR 360×350×90-PF**
	352	40	**CR PGR 360×352×40-PF**
	352	50	**CR PGR 360×352×50-PF**
	354	50	**CR PGR 360×354×50-PF**
370	362	40	**CR PGR 370×362×40-PF**
380	372	25	**CR PGR 380×372×25-PF**
	372	50	**CR PGR 380×372×50-PF**
400	392	30	**CR PGR 400×392×30-PF**
	392	40	**CR PGR 400×392×40-PF**

rgab.ru Берг АБ bergab@ya.ru Тел. (495)-228-06-21, факс (495) 2

rgab.ru Берг АБ bergab@ya.ru Тел. (495)-228-06-21, факс (495) 22

Dimensions			Designation
D	d	L	
mm			–
410	400	30	**CR PGR 410×400×30-PF**
420	412	45	**CR PGR 420×412×45-PF**
440	432	40	**CR PGR 440×432×40-PF**
450	442	30	**CR PGR 450×442×30-PF**
480	470	30	**CR PGR 480×470×30-PF**
490	482	45	**CR PGR 490×482×45-PF**
	485	15	**CR PGR 490×485×15-PF**
	485	25	**CR PGR 490×485×25-PF**
500	492	50	**CR PGR 500×492×50-PF**
520	510	70	**CR PGR 520×510×70-PF**
	512	40	**CR PGR 520×512×40-PF**
530	522	70	**CR PGR 530×522×70-PF**
540	532	100	**CR PGR 540×532×100-PF**
600	590	35	**CR PGR 600×590×35-PF**
602	592	20	**CR PGR 602×592×20-PF**
	592	80	**CR PGR 602×592×80-PF**
650	645	15	**CR PGR 650×645×15-PF**
	645	20	**CR PGR 650×645×20-PF**
680	670	60	**CR PGR 680×670×60-PF**
	670	80	**CR PGR 680×670×80-PF**
	675	15	**CR PGR 680×675×15-PF**
	675	20	**CR PGR 680×675×20-PF**
740	730	80	**CR PGR 740×730×80-PF**
830	820	80	**CR PGR 830×820×80-PF**
	820	90	**CR PGR 830×820×90-PF**

Dimensions			Designation
D	d	L	
mm			–
860	850	85	**CR PGR 860×850×85-PF**
	855	25	**CR PGR 860×855×25-PF**
900	890	100	**CR PGR 900×890×100-PF**

5

rgab.ru Берг АБ bergab@ya.ru Тел. (495)-228-06-21, факс (495) 22

rgab.ru Берг АБ bergab@ya.ru Тел. (495)-228-06-21, факс (495) 2

Guiding rings PGR .. A
d 25 – 280 mm

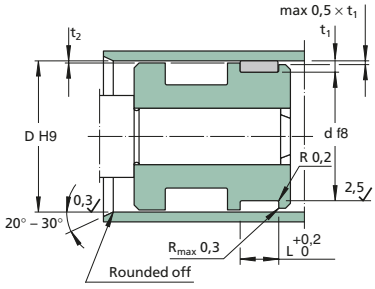

Type PGR .. A
Guide ring of acetal resin for piston.

The size of the clearance t_2 on the piston seal's low pressure side(s), see installation drawing, depends on what the design of the seal in question demands depending on the service conditions, especially temperature and pressure.

The tolerances of the cylinder bore diameter and the guide ring housing diameter are normally D H9 and d f8 respectively in order to minimize the guiding clearance.

At cylinder tube diameters over 250 mm the tolerance H8 should be considered and the guide ring housing diameter tolerance should be max –0,15 mm based on the nominal diameter.

At bore diameters smaller than 50 mm a wall thickness of 1,5 to 2 mm should be chosen.

Dimensions			Designation
D	d	L	
mm			–
25	21	10	**CR PGR 25×21×10-A**
32	26	10	**CR PGR 32×26×10-A**
35	29	10	**CR PGR 35×29×10-A**
	31	10	**CR PGR 35×31×10-A**
40	34	10	**CR PGR 40×34×10-A**
	36	10	**CR PGR 40×36×10-A**
45	39	10	**CR PGR 45×39×10-A**
	41	10,2	**CR PGR 45×41×10.2-A**
50	44	10	**CR PGR 50×44×10-A**
	46	10,2	**CR PGR 50×46×10.2-A**
55	49	10	**CR PGR 55×49×10-A**
	49	13	**CR PGR 55×49×13-A**
	51	10	**CR PGR 55×51×10-A**
60	54	10	**CR PGR 60×54×10-A**
	54	13	**CR PGR 60×54×13-A**
	56	10	**CR PGR 60×56×10-A**
63	57	10	**CR PGR 63×57×10-A**
	57	13	**CR PGR 63×57×13-A**
64	60	19,5	**CR PGR 64×60×19.5-A**
65	59	13	**CR PGR 65×59×13-A**
	62	20	**CR PGR 65×62×20-A**
70	64	10	**CR PGR 70×64×10-A**
	64	13	**CR PGR 70×64×13-A**
	66	10	**CR PGR 70×66×10-A**
75	69	13	**CR PGR 75×69×13-A**
80	74	13	**CR PGR 80×74×13-A**
85	79	13	**CR PGR 85×79×13-A**
	80	20	**CR PGR 85×80×20-A**

Dimensions			Designation
D	d	L	
mm			–
90	84	13	**CR PGR 90×84×13-A**
95	89	13	**CR PGR 95×89×13-A**
100	94	13	**CR PGR 100×94×13-A**
	96	15,2	**CR PGR 100×96×15.2-A**
105	101	20	**CR PGR 105×101×20-A**
	99	13	**CR PGR 105×99×13-A**
110	104	13	**CR PGR 110×104×13-A**
115	109	13	**CR PGR 115×109×13-A**
120	114	13	**CR PGR 120×114×13-A**
125	119	13	**CR PGR 125×119×13-A**
130	124	13	**CR PGR 130×124×13-A**
135	129	13	**CR PGR 135×129×13-A**
140	134	13	**CR PGR 140×134×13-A**
145	139	13	**CR PGR 145×139×13-A**
150	144	13	**CR PGR 150×144×13-A**
	144	19,5	**CR PGR 150×144×19.5-A**
160	154	13	**CR PGR 160×154×13-A**
	154	19,5	**CR PGR 160×154×19.5-A**
180	174	19,5	**CR PGR 180×174×19.5-A**
200	194	19,5	**CR PGR 200×194×19.5-A**
	196	25,2	**CR PGR 200×196×25.2-A**
220	214	19,5	**CR PGR 220×214×19.5-A**
250	244	19,5	**CR PGR 250×244×19.5-A**
280	274	19,5	**CR PGR 280×274×19.5-A**

rgab.ru Берг АБ bergab@ya.ru Тел. (495)-228-06-21, факс (495) 2

rgab.ru Берг АБ bergab@ya.ru Тел. (495)-228-06-21, факс (495) 2

rgab.ru Берг АБ bergab@ya.ru Тел. (495)-228-06-21, факс (495) 2

rgab.ru Берг АБ bergab@ya.ru Тел. (495)-228-06-21, факс (495) 2

Guide strips of PTFE

Guide strips should only be used in applications with light loads or when the media, temperature, friction or speed do not allow any other design.

At pressures over 20 to 30 MPa, please contact our technical department.

The advantages of guide strips of PTFE
- resistant to chemicals,
- close tolerances,
- wear resistant,
- no stickslip effect,
- reduce vibrations,
- prevent particles from reaching the seals,
- can be delivered as piece-goods,
- do not vulcanize with the contact surface,
- low friction,
- wide temperature range,
- protect components from diesel effects, and
- stock product.

Limitations
- do not withstand heavy loads,
- difficult to assemble on pistons, and
- not suitable for high pressure applications with side loads.

Fig 1

Guide strips of PTFE

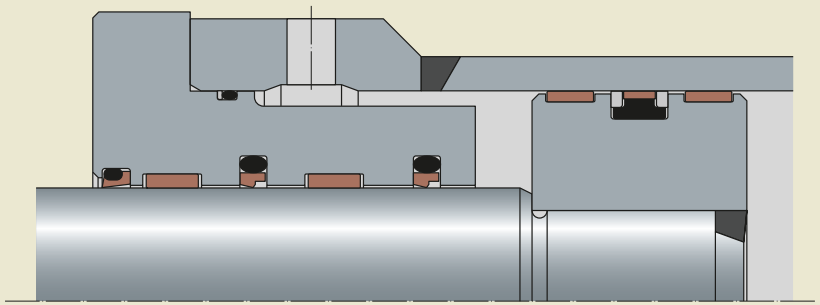

rgab.ru Берг АБ bergab@ya.ru Тел. (495)-228-06-21, факс (495) 2

rgab.ru Берг АБ bergab@ya.ru Тел. (495)-228-06-21, факс (495) 22

Fig 2

Designs

Type SB with a basic design

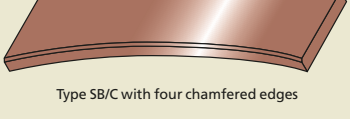

Type SB/C with four chamfered edges

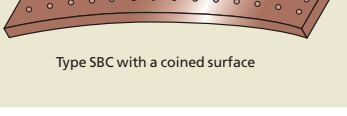

Type SBC with a coined surface

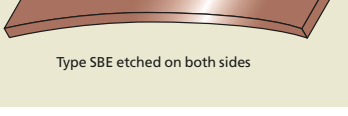

Type SBE etched on both sides

5

Fig 3

Type of cut

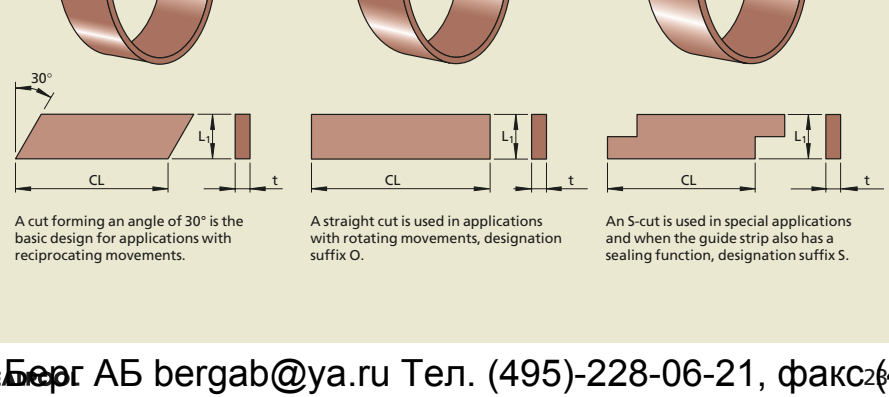

A cut forming an angle of 30° is the basic design for applications with reciprocating movements.

A straight cut is used in applications with rotating movements, designation suffix O.

An S-cut is used in special applications and when the guide strip also has a sealing function, designation suffix S.

rgab.ru Берг АБ bergab@ya.ru Тел. (495)-228-06-21, факс (495) 22

rgab.ru Берг АБ bergab@ya.ru Тел. (495)-228-06-21, факс (495) 2

Calculation of the guide strip length
The guide strip length can be calculated from the following formulas:

Guide strips for piston, see **fig 4**:

Material MS-292

$$CL = 3{,}110 \times (D - t) - 0{,}8$$

Material MS-302/304

$$CL = 3{,}116 \times (D - t) - 0{,}8$$

Guide strips for rod, see **fig 5**:

Material MS-292

$$CL = 3{,}110 \times (d + t) - 0{,}8$$

Material MS-302/304

$$CL = 3{,}116 \times (d + t) - 0{,}8$$

Where
CL = length of strip, mm
D = diameter of cylinder, mm
d = diameter of rod, mm
t = thickness of strip, according to product table, mm

Fig **4**

Guide strips for piston

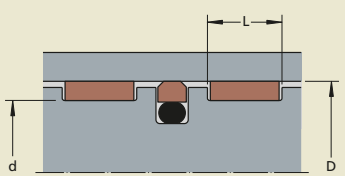

Fig **5**

Guide strips for rod

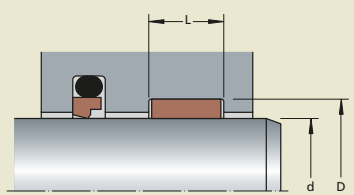

rgab.ru Берг АБ bergab@ya.ru Тел. (495)-228-06-21, факс (495) 2

rgab.ru Берг АБ bergab@ya.ru Тел. (495)-228-06-21, факс (495) 2

Type SB, SB/C guide strips for piston

Designations
SEALPOOL guide strips for pistons are designated according to a system which clearly states the type/design, dynamic diameter (D), nominal housing groove diameter (d), housing groove width (L), type of cut, see **fig 3**, **page 239**, and material, see **Table 1**. The dimension table also states the radial width (t).

When ordering in meters, please state SB t × L-292 + length in meter.

Type SB, SB/C guide strips for rod

Designations
SEALPOOL guide strips for rods are designated according to a system which clearly states the type/design, dynamic diameter (d), nominal housing groove diameter (D), housing groove width (L), type of cut, see **fig 3**, **page 239**, and material, see **Table 2**. The dimension table also states the radial width (t).

When ordering in meters, please state SB t × L-292 + length in meter.

5

Table 1

Designation codes for guide strips for piston

CR SB 200×195×12×45 – 292

Type/design
Bore diameter (D)
Housing groove diameter (d)
Housing groove width (L)
Type of cut *
Material code

* State angle when other than 30°, 0° or S.

Table 2

Designation codes for guide strips for rod

CR SB 190×195×12×45 – 292

Type/design
Bore diameter (d)
Housing groove diameter (D)
Housing groove width (L)
Type of cut *
Material code

* State angle when other than 30°, 0° or S.

rgab.ru Берг АБ bergab@ya.ru Тел. (495)-228-06-21, факс (495) 2

rgab.ru Берг АБ bergab@ya.ru Тел. (495)-228-06-21, факс (495) 2

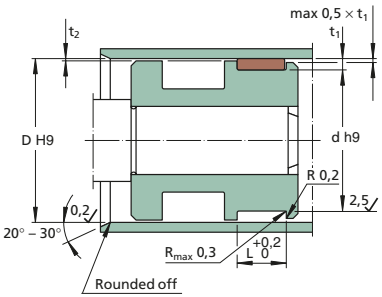

Type SB, SB/C
Guide strips of PTFE for piston.

The size of the clearance t_2 on the piston seal's low pressure side(s), see installation drawing, depends on what the design of the seal in question demands depending on the service conditions, especially temperature and pressure.

The tolerances of the cylinder bore diameter and the guide strip housing diameter are normally D H9 and d f8 respectively in order to minimize the guiding clearance.

At cylinder tube diameters over 250 mm the tolerance H8 should be considered and the guide strip housing diameter tolerance should be max –0,15 mm based on the nominal diameter.

At bore diameters smaller than 50 mm a wall thickness of 1,5 to 2 mm should be chosen.

Dimensions				Material code[2]	Type/Design
D	t	L[1]	d		
mm					–
15 – 200	1	10	D – 2	671	**CR SBC**
50 – 300	1	15	D – 2	671	**CR SBC**
50 – 400	1	20	D – 2	671	**CR SBC**
50 – 500	1	25	D – 2	671	**CR SBC**
50 – 500	1	30	D – 2	671	**CR SBC**
8 – 20	1,5	2,5	D – 3	292	**CR SB, CR SB/C**
12 – 30	1,5	3,2	D – 3	292	**CR SB, CR SB/C**
15 – 40	1,5	4,2	D – 3	292	**CR SB, CR SB/C**
20 – 60	1,5	6,3	D – 3	292	**CR SB, CR SB/C**
9 – 18	1,55	2,5	D – 3,1	292	**CR SB, CR SB/C**
10 – 60	1,55	4	D – 3,1	292	**CR SB, CR SB/C**
10 – 25	2	2,5	D – 4	292	**CR SB, CR SB/C**
15 – 35	2	4,2	D – 4	292	**CR SB, CR SB/C**
20 – 50	2	5,6	D – 4	292	**CR SB, CR SB/C**
25 – 75	2	6,3	D – 4	292	**CR SB, CR SB/C**
30 – 200	2	8,1	D – 4	292	**CR SB, CR SB/C**
35 – 300	2	9,7	D – 4	292	**CR SB, CR SB/C**
100 – 400	2	12	D – 4	292	**CR SB, CR SB/C**
120 – 500	2	15	D – 4	292	**CR SB, CR SB/C**
200 – 600	2	20	D – 4	292	**CR SB, CR SB/C**
250 – 1 000	2	25	D – 4	292	**CR SB, CR SB/C**
300 – 1 000	2	30	D – 4	292	**CR SB, CR SB/C**
10 – 25	2,5	2,5	D – 5	292	**CR SB, CR SB/C**
15 – 35	2,5	4,2	D – 5	292	**CR SB, CR SB/C**
20 – 50	2,5	5,6	D – 5	292	**CR SB, CR SB/C**
25 – 75	2,5	6,3	D – 5	292	**CR SB, CR SB/C**
30 – 200	2,5	8,1	D – 5	292	**CR SB, CR SB/C**
35 – 300	2,5	9,7	D – 5	292	**CR SB, CR SB/C**
100 – 400	2,5	12	D – 5	292	**CR SB, CR SB/C**
120 – 500	2,5	15	D – 5	292	**CR SB, CR SB/C**
200 – 600	2,5	20	D – 5	292	**CR SB, CR SB/C**
250 – 1 000	2,5	25	D – 5	292	**CR SB, CR SB/C**
300 – 1 000	2,5	30	D – 5	292	**CR SB, CR SB/C**

[1] Please contact us to discuss other sizes
[2] See **table 3** on **page 217**

rgab.ru Берг АБ bergab@ya.ru Тел. (495)-228-06-21, факс (495) 2

rgab.ru Берг АБ bergab@ya.ru Тел. (495)-228-06-21, факс (495) 2

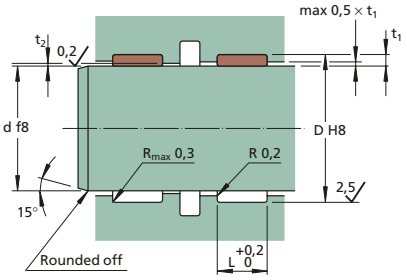

Type SB, SB/C
Guide strips of PTFE for rod.

The size of the clearance t_2 on the rod seal's low pressure side, see installation drawing, depends on what the design of the seal in question demands depending on the service conditions, especially temperature and pressure.

The tolerances of the rod diameter and the guide strip housing diameter are normally d f8 and D H9 respectively in order to minimize the guiding clearance.

At rod diameters over 500 mm the tolerance H8 should be considered in order to limit the guiding clearance. When a rod diameter tolerance other than f8 is used, an optimal guide strip housing tolerance must be calculated to obtain about the same guiding clearance character as if the tolerances f8/H9 were used.

At rod diameters smaller than 50 mm a wall thickness of 1,5 to 2 mm should be chosen to enable assembly into closed housing grooves.

Dimensions				Material code[2]	Type/Design
D	t	L[1]	d		
mm					–
10 – 200	1	10	d + 2	671	CR SBC
45 – 300	1	15	d + 2	671	CR SBC
45 – 400	1	20	d + 2	671	CR SBC
45 – 500	1	25	d + 2	671	CR SBC
45 – 500	1	30	d + 2	671	CR SBC
5 – 20	1,5	2,5	d + 3	292	CR SBC
9 – 30	1,5	3,2	d + 3	292	CR SBC
12 – 40	1,5	4,2	d + 3	292	CR SBC
15 – 60	1,5	6,3	d + 3	292	CR SBC
6 – 18	1,55	2,5	d + 3,1	292	CR SBC
8 – 60	1,55	4	d + 3,1	292	CR SBC
5 – 25	2	2,5	d + 4	292	CR SBC
10 – 35	2	4,2	d + 4	292	CR SBC
15 – 50	2	5,6	d + 4	292	CR SBC
20 – 75	2	6,3	d + 4	292	CR SBC
25 – 200	2	8,1	d + 4	292	CR SBC
30 – 300	2	9,7	d + 4	292	CR SBC
90 – 400	2	12	d + 4	292	CR SBC
110 – 500	2	15	d + 4	292	CR SBC
190 – 600	2	20	d + 4	292	CR SBC
240 – 1 000	2	25	d + 4	292	CR SBC
300 – 1 000	2	30	d + 4	292	CR SBC
5 – 25	2,5	2,5	d + 5	292	CR SBC
10 – 35	2,5	4,2	d + 5	292	CR SBC
15 – 50	2,5	5,6	d + 5	292	CR SBC
20 – 75	2,5	6,3	d + 5	292	CR SBC
25 – 200	2,5	8,1	d + 5	292	CR SBC
30 – 300	2,5	9,7	d + 5	292	CR SBC
90 – 400	2,5	12	d + 5	292	CR SBC
110 – 520	2,5	15	d + 5	292	CR SBC
190 – 600	2,5	20	d + 5	292	CR SBC
240 – 1 000	2,5	25	d + 5	292	CR SBC
300 – 1 000	2,5	30	d + 5	292	CR SBC

[1] Please contact us to discuss other sizes
[2] See **table 3** on **page 217**

rgab.ru Берг АБ bergab@ya.ru Тел. (495)-228-06-21, факс (495) 2

rgab.ru Берг АБ bergab@ya.ru Тел. (495)-228-06-21, факс (495) 2

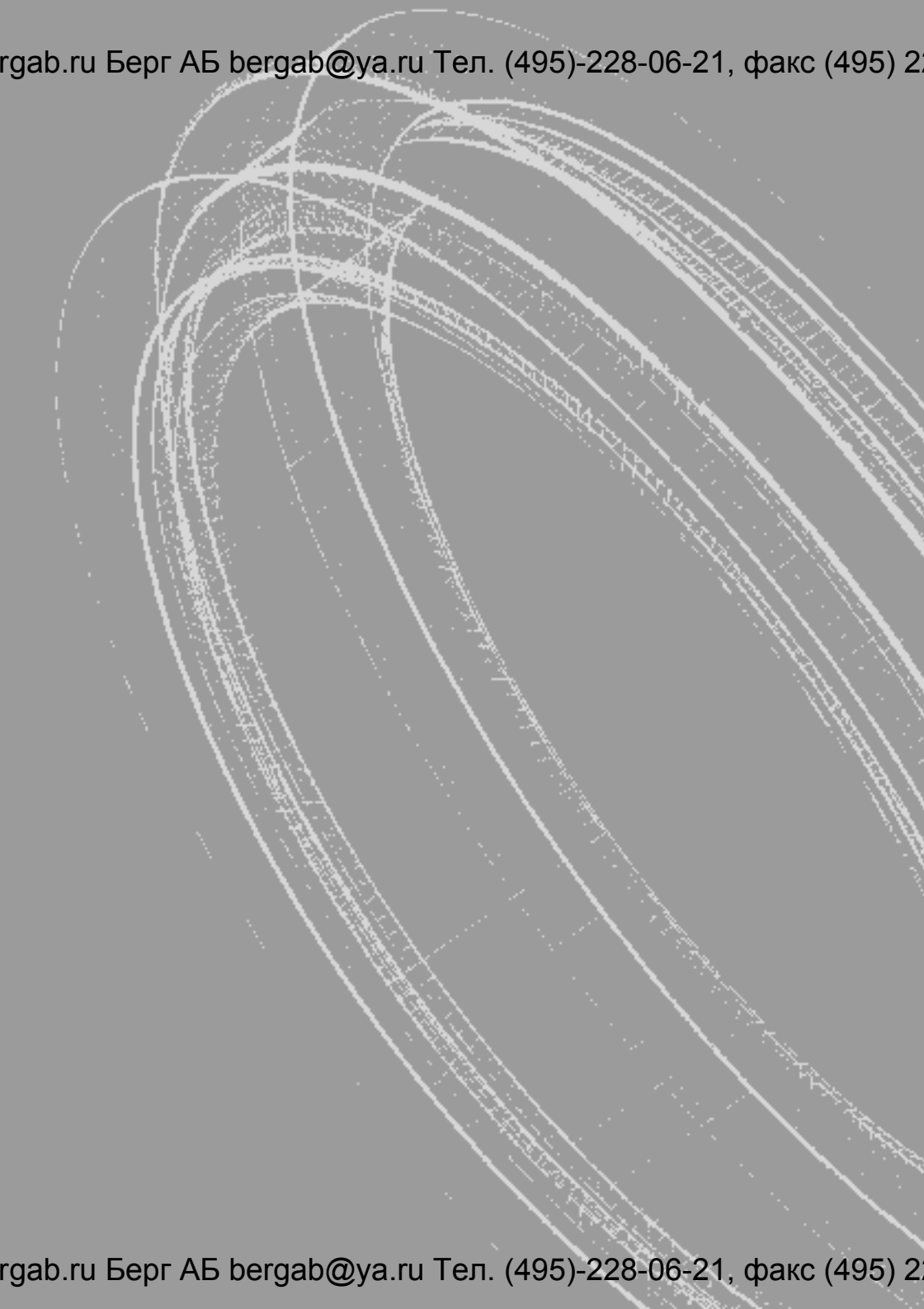

rgab.ru Берг АБ bergab@ya.ru Тел. (495)-228-06-21, факс (495) 2

rgab.ru Берг АБ bergab@ya.ru Тел. (495)-228-06-21, факс (495) 2

Spring activated seals

Spring activated seals **246**
Radial installation of SU seals 247
Axial installation of SU seals 248
Hardware design, open and closed grooves 248
Selection table 248

6

rgab.ru Берг АБ bergab@ya.ru Тел. (495)-228-06-21, факс (495) 2

rgab.ru Берг АБ bergab@ya.ru Тел. (495)-228-06-21, факс (495) 2

Spring activated seals

Spring activated PTFE seals – series SU
Series SU is a single-acting, spring activated PTFE seal for both piston and rod. SU is appropriate for use as a dynamic seal at slowly rotating or reciprocating movements as well as a shaft seal or static seal. Series SU often replaces a rubber seal, e.g. an O-ring in applications with high or low temperatures, non-lubricated services, demands on low friction, aggressive media, high speeds, high pressures, vacuum etc.

Series SU can be delivered with many different spring types and materials adjusted to the application demands and so can the PTFE material.

The main advantages of series SU are:

- high chemical resistance,
- withstands speeds up to 15 m/s,
- wide temperature range, –254 to +310 °C (depending on the choice of material),
- withstands pressures up to 40 MPa (standard), higher pressures demand special design, and
- FDA quality.

SEALPOOL SU seals are designated according to a system that clearly states the seal series, type, dynamic seal diameter (bore), nominal groove diameter and groove width and choice of material, see **Table 1** and **2**.

All types can be delivered with a special design regarding groove dimensions and material properties in order to obtain optimal solution.

Please see **Table 6**, **page 249** and **Table 7**, **page 250** for further information

Groove edges
All groove edges are smoothed and rounded off to R = 0,1 to 0,2 mm.

Table **1**

Designation codes for series SU spring activated seals

CR SUD 30×36.2×4.8 – AB H Q

- Seal series/type
- Rod diameter
- Groove diameter
- Groove width
- Material code (cup)
- Material code (type of spring)[1]
- Silicone filled

1) See **Table 7** on **page 250** for spring types

Table **2**

Cup, material codes

Code	MS	Material type
AA	100	Unfilled PTFE (FDA approved)
AI	141	PTFE + glass fibre (FDA approved)
AB	231	PTFE + low degree of metal oxide
AC	271	PTFE + polyoxybenzoate (polymer)
AD	292	PTFE + bronze + molybdenum disulphide
AE	302	PTFE + carbon + graphite fibre
AG	851	PTFE + carbon fibre
BK	426	PE-UHMW

rgab.ru Берг АБ bergab@ya.ru Тел. (495)-228-06-21, факс (495) 2

rgab.ru Берг АБ bergab@ya.ru Тел. (495)-228-06-21, факс (495) 22

Radial installation of SU seals

SU seals can be installed in O-ring grooves according to AS 568 and BS 1806. PTFE seals are not as elastic as e.g. O-rings of elastomeric materials and should therefore be installed in open grooves. At large diameters or small cross sections, installations in closed or half-closed grooves are possible. Please see **Table 3** for further installation dimensions.

Table 3

Radial installation of SU seals

SUR
SURE
SURAE

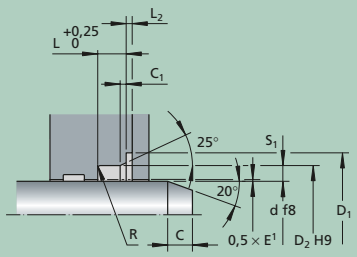

SUA
SUD
SUS

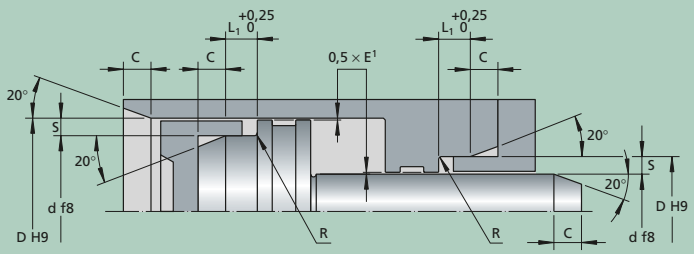

Recommended size range from	to	Groove depth S	Groove width S_1	Groove L	Groove L_1	L_2	C_1	With guide ring E^1 0 – 10 MPa	(10) – 25 MPa	(25) – 40 MPa	C	R	D_1	
mm														
6 –	13,9	1,45	1,45	2,4	3,8	0,8	0,45	0,4	0,3	0,2	3,4	0,4		
14 –	24,9	2,25	2,5	3,6	4,65	0,9	0,85	0,5	0,4	0,3	4,2	0,4	d + 9	0 / +0,2
25 –	45,9	3,1	3,5	4,8	5,7	1,3	1,35	0,5	0,4	0,3	5,8	0,6	d + 12,5	0 / +0,2
46 –	124,9	4,7	5,25	7,1	8,5	1,8	1,8	0,6	0,5	0,4	7,4	0,8	d + 17,5	0 / +0,2
125 –		6,1	7	9,5	11,2	2,3	2,8	0,8	0,6	0,5	8,4	0,8	d + 22,5	0 / +0,2

[1] Not valid for SUR, please contact Sealpool's technical department. If the clearance 0,5 × E is < 0,20 mm, a guide ring should not be used.

6

rgab.ru Берг АБ bergab@ya.ru Тел. (495)-228-06-21, факс (495) 22

rgab.ru Берг АБ bergab@ya.ru Тел. (495)-228-06-21, факс (495) 2

Table **4**

Axial installation of SU seals

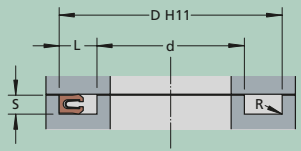

Inside pressure

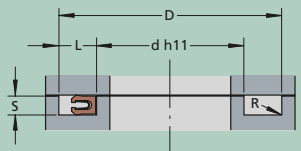

Outside pressure and inside vacuum

Axial groove width S +0,05	Radial groove width $L_{min.}$	$R_{max.}$
mm		
1,45	2,4	0,2
2,25	3,6	0,4
3,10	4,8	0,6
4,70	7,1	0,8
6,10	9,5	0,8

See **Table 8** on **page 250** regarding surface roughness value for each type of media and movement

Axial installation of SU seals
Please see **Table 4** for installation dimensions for type SUF.

Hardware design, open and closed grooves
Please study **Table 5** for installation instructions.

Selection table
In order to facilitate the selection of the correct spring activated seal, please study **Table 6**.

Table **5**

Hardware design, open and closed grooves

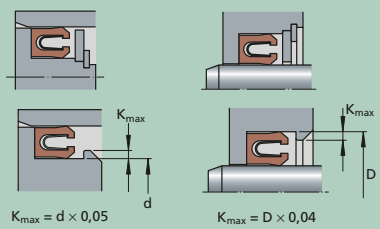

$K_{max} = d \times 0,05$ $K_{max} = D \times 0,04$

S	K_{min}
mm	
1,45	0,35
2,25	0,55
3,1	0,75
4,7	0,8
6,1	0,9

rgab.ru Берг АБ bergab@ya.ru Тел. (495)-228-06-21, факс (495) 2

rgab.ru Берг АБ bergab@ya.ru Тел. (495)-228-06-21, факс (495) 22

Table **6**

Selection of seal type

Profile	Seal type	Installation	Static*	Reciprocating*	Rotating*
	SUA Asymmetrical with a wiper lip	Rod	2	1	3
	SUA Asymmetrical with a wiper lip	Piston	2	1	3
	SUD Asymmetrical with a strong dynamic lip	Piston	3	1	2
	SUD Asymmetrical with a strong dynamic lip	Rod	3	1	2
	SUR Shaft seal with a flange and a strong dynamic lip	Rod	3	2	1
	SUS Symmetrical for static applications	Piston/Rod	1	2	3
	SUF Shaft seal for inside pressure	Flange seal (sealing from inside, axial)	1	–	2
	SUF Shaft seal for outside pressure	Flange seal (sealing from outside, axial)	1	–	2
	SUAXE Design with encapsulated spring[1]	Piston/Rod (all seal types)	1	1	1
	SUX	Rod (special design)	1	1	1
	SUD-XXXQ Silicone filled[2]	Rod (special design)	1	1	1

*) 1 = Excellent
2 = Acceptable
3 = Less appropriate

[1] All designs can be delivered with an encapsulated spring. See **Table 7**, **page 250** for different spring types.
[2] All designs can be delivered with a silicone filler preventing media and contamination particles to reach the spring. The silicone is FDA approved.

6

rgab.ru Берг АБ bergab@ya.ru Тел. (495)-228-06-21, факс (495) 22

rgab.ru Берг АБ bergab@ya.ru Тел. (495)-228-06-21, факс (495) 2

Table **7**

Springs for SU seals

Spring design	Spring force	Material code	Material and design code
Slant coil spring	Low	Stainless steel 301 Elgiloy Hastelloy C276	E F G
V spring (basic design)	Medium	Stainless steel 301 Elgiloy Hastelloy C276	E I J
Helical band spring 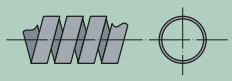	High	Stainless steel 301 Elgiloy Hastelloy C276	K L M

Material or spring design	Application field
Stainless steel	Less aggressive media
Elgiloy	Aggressive media
Hastelloy	Aggressive media and very high temperatures
Slant coil spring	Applications with low friction
Helical band spring	Static appliactions and low temperatures

Table **8**

Surface roughness values for SU seals

Medium	Recommended surface roughness values Reciprocating	Rotating	Static
Low molecular gases **Media with low surface tension** Low temperature hydrogen, helium, freon, nitrogen	$R_a \leq 0{,}2$ µm R_z	$R_a \leq 0{,}2$ µm	$R_a \leq 0{,}3$ µm
Low viscosity fluids and gases	$R_a \leq 0{,}3$ µm	$R_a \leq 0{,}2$ µm	$R_a \leq 0{,}6$ µm
Medium to low viscosity fluids Hydraulic fluids, water, skydrol Transmission oil	$R_a \leq 0{,}4$ µm	$R_a \leq 0{,}2$ µm	$R_a \leq 0{,}8$ µm

rgab.ru Берг АБ bergab@ya.ru Тел. (495)-228-06-21, факс (495) 2

rgab.ru Берг АБ bergab@ya.ru Тел. (495)-228-06-21, факс (495) 2

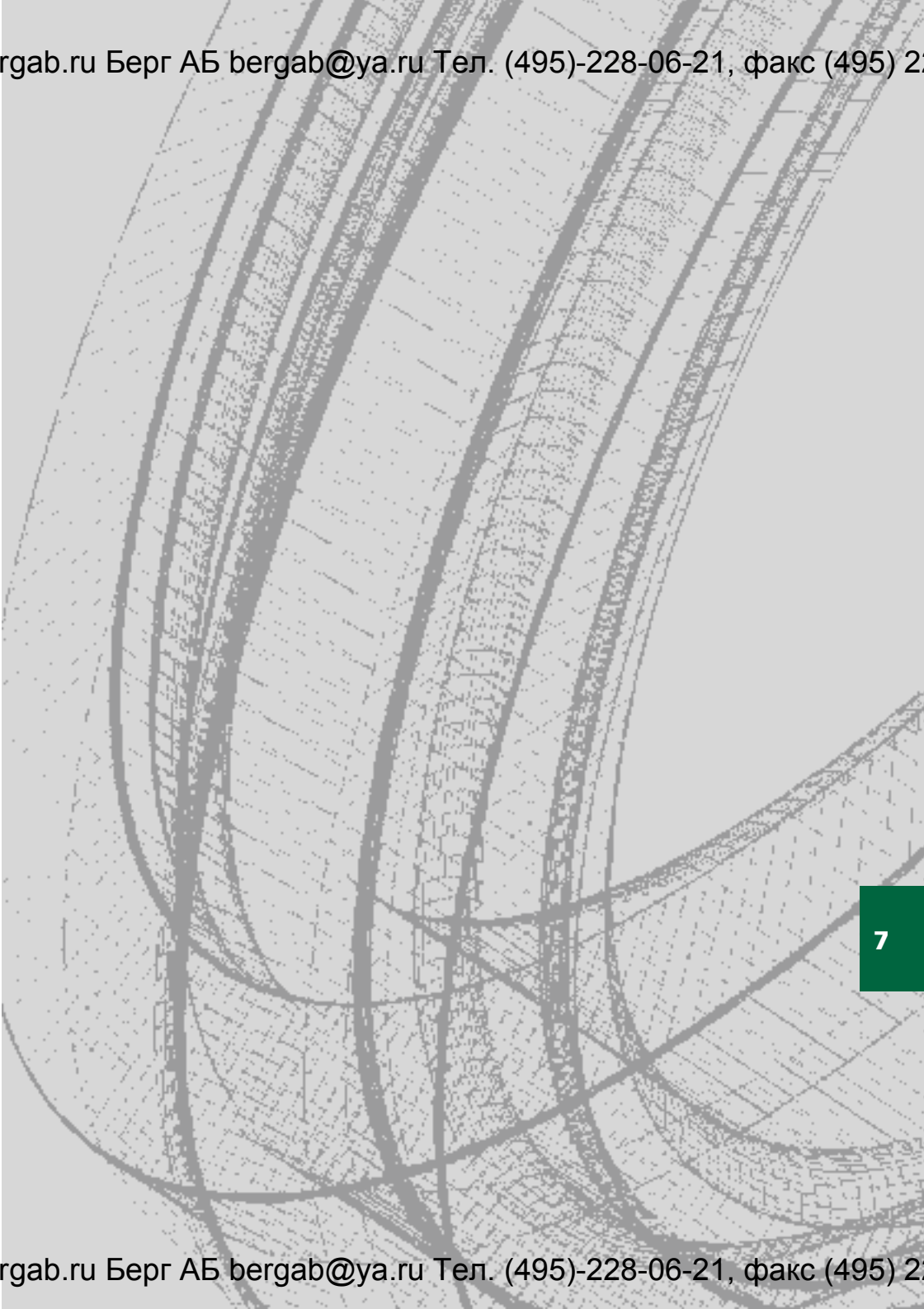

rgab.ru Берг АБ bergab@ya.ru Тел. (495)-228-06-21, факс (495) 2

rgab.ru Берг АБ bergab@ya.ru Тел. (495)-228-06-21, факс (495) 2

rgab.ru Берг АБ bergab@ya.ru Тел. (495)-228-06-21, факс (495) 2

rgab.ru Берг АБ bergab@ya.ru Тел. (495)-228-06-21, факс (495) 2

O-rings

O-rings **254**
General information 254
Surface requirements 255
Designations 255
Assembly lead-in chamfers 255
Groove edges 255
Tolerances 256
Material 256
Quality system 256
Swedish standard 258
Dynamic installation, radial squeeze 258
Static installation, radial squeeze 258
O-ring housing in cylinder bore 258
O-ring housing in rod 258
Static installation, axial squeeze 259
English-American standard 268
Dynamic installation, radial squeeze 268
Static installation, radial squeeze 268
O-ring housing in cylinder bore 268
O-ring housing in rod 268
Static installation, axial squeeze 269
Product tables 288

PTFE encapsulated O-rings, type ECOR 312
Structure 312
Function 312
Advantages 312
Designations 312
Standard sections 312
Groove design 312
Assembly of ECOR 313

rgab.ru Берг АБ bergab@ya.ru Тел. (495)-228-06-21, факс (495) 2

rgab.ru Берг АБ bergab@ya.ru Тел. (495)-228-06-21, факс (495) 2

O-rings

The O-ring is one of the most common sealing devices and is used in the most different applications. The design is unique with its genius simplicity.

In this catalogue you will find the widest O-ring range of the market. For your guidance we give you fundamental technical information that can be applied for most sizes in this catalogue. Detailed information about O-ring sizes and tolerances, installation instructions and in some cases material properties you will find in national and international standards, e.g. SMS 1586 and ISO 3601. We will be pleased to inform you about them.

General information

The following information concerns O-rings used as dynamic seals, at reciprocating movement and as static seals for radial or axial squeeze.

The O-ring seals through its deformation between the surfaces against which it is supposed to seal. The working pressure at which the O-ring can be used is dependent on, among others, the installation mode, fitting clearance, the O-ring material, sealed medium and temperature. O-rings of a hard material generally provide an inferior sealing ability at low pressures due to large permanent deformation. **Fig 1** shows the O-ring assembled at different pressure conditions.

Back-up rings should be used when the fitting clearance between the surfaces that the O-ring should seal is large enough to allow the O-ring to extrude at certain working pressures. In installations with normal and standardized dimensions and tolerances the O-ring normally must be completed with back-up ring(s) if the working pressure exceeds 10 to 16 MPa, depending on the temperature. For further information regarding back-up rings, please see **page 316**.

Designations

SEALPOOL O-rings are designated according to a system that states the inside diameter, the cross section diameter, the material code and the hardness, see **Table 1**.

Fig 1

O-rings at normal housing diameter tolerances and various pressures

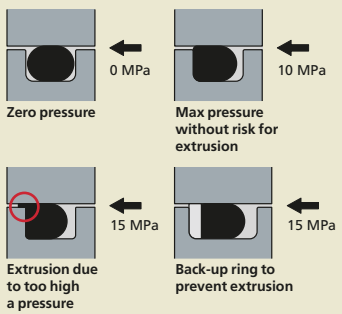

Table 1

Designation codes for O-rings

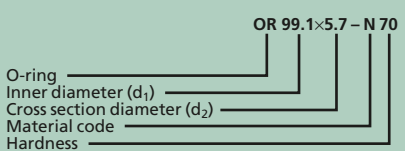

rgab.ru Берг АБ bergab@ya.ru Тел. (495)-228-06-21, факс (495) 2

rgab.ru Берг АБ bergab@ya.ru Тел. (495)-228-06-21, факс (495) 2

Surface requirements

A satisfactory surface roughness value of the surfaces to be sealed is important to reach a good sealing function. It is important that the surfaces have a smooth and fine surface structure and surface roughness values within the limits stated.

Assembly lead-in chamfers

It is important that the edges and openings which the O-ring has to pass during the assembly have appropriate lead-in chamfers that are well rounded off, see **Table 2**. Before the assembly the O-ring and surrounding details should be well lubricated, preferably with the same medium as in the sealing system.

Groove edges

All groove edges are smoothed and rounded off to R = 0,1 to 0,2 mm.

Table 2

Assembly lead-in chamfers

Inside chamfer

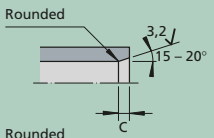

Outside chamfer

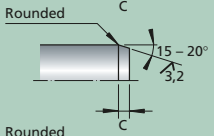

Hole

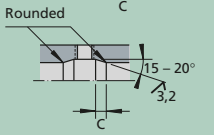

O-ring cross section from	to	C_{min}
mm		
1	**– 1,5**	1,5
1,6	**– 2**	2
2,4	**– 3**	2,5
3,53	**– 4,5**	3,5
5	**– 5,7**	4,5
6	**– 8,4**	5,5

7

rgab.ru Берг АБ bergab@ya.ru Тел. (495)-228-06-21, факс (495) 2

rgab.ru Берг АБ bergab@ya.ru Тел. (495)-228-06-21, факс (495) 22

Tolerances

Please study **Table 1** for dimensions and tolerances suitable for any elastomeric material provided that appropriate tooling is used. Please note that the tooling most commonly used is based upon the shrinkage of nitrile rubber, hardness 70° IRH.

Material

We normally stock O-rings of nitrile rubber (N) 70° IRH. When necessary, alternative hardnesses like 80° and 90° can be delivered within a couple of weeks. It is, however, better to choose 70° IRH and combine the O-ring with a back-up ring. For applications with temperatures over +100 °C fluorocarbon rubber (F) or silicone rubber (Q) can be appropriate, depending on the medium. Contact us for more information about materials and for an offer.

Quality system

Our quality system is third party certificated according to the demands of ISO 9001. The quality system constitutes the basis for all our activities. The quality demands of ISO 3601-3 provide guidance regarding O-ring properties.

Table 2 states the maximum acceptable limits for surface imperfections of O-rings according to ISO 3601-3.

Table 1

Tolerances

Inside diameter d_1 over	incl	Tolerance
mm		mm
1,15	6,3	± 0,15
6,35	10	± 0,17
10,1	16	± 0,2
16,1	25,07	± 0,25
25,1	33,5	± 0,32
34	42,86	± 0,4
43	54,6	± 0,5
55	67,3	± 0,6
67,6	87,5	± 0,75
88	107,67	± 0,9
108	136,53	± 1,1
137	165	± 1,3
166	194,5	± 1,5
195	236	± 1,8
237	285	± 2,1
286	345	± 2,5
346	429	± 3
430	540	± 3,7
545	670	± 4,5

Cross section diameter d_2 over	incl.	Tolerance
mm		mm
1	2,4	± 0,08
2,62	2,65	± 0,09
3	3,55	± 0,1
4	5,7	± 0,13
6	8,4	± 0,15

rgab.ru Берг АБ bergab@ya.ru Тел. (495)-228-06-21, факс (495) 22

rgab.ru Берг АБ bergab@ya.ru Тел. (495)-228-06-21, факс (495) 2

Table **2**

Maximum acceptable surface imperfections

Surface imperfection category Schematic illustration	Letter symbol	Maximum acceptable limits Grade N O-rings Section diameter d_2 1,8	2,65	3,55	5,3	7	Grade S O-rings Section diameter d_2 1,8	2,65	3,55	5,3	7
Offset (Off register and mismatch)											
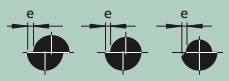	e	0,08	0,1	0,13	0,15	0,15	0,08	0,08	0,1	0,12	0,13
Combined flash, offset and parting line projection											
	f	0,1	0,12	0,14	0,16	0,18	0,1	0,1	0,13	0,15	0,15
Backrind											
	g	0,18	0,27	0,36	0,53	0,7	0,1	0,15	0,2	0,2	0,3
	h	0,08	0,08	0,1	0,1	0,13	0,05	0,08	0,1	0,1	0,13
Excessive trimming											
	–	Departure from a circular cross section due to trimming is allowed provided that the resultant surface is smoothly blended and is within the size tolerance limits for d_2									
Flow marks (Radial orientation of flow marks is not permissible)											
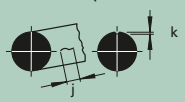		$0{,}05 \times d_1$[1] **or**[2]					$0{,}03 \times d_1$[1] **or**[2]				
	j	1,5	1,5	6,5	6,5	6,5	1,5	1,5	5	5	5
	k	0,08	0,08	0,08	0,08	0,08	0,05	0,05	0,05	0,05	0,05
		[1] d_1 = inside diameter [2] the value which is the greater									
Non-fills and indentations (including parting line indentation)											
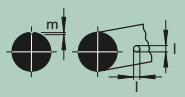	l	0,6	0,8	1	1,3	1,7	0,15	0,25	0,4	0,63	1
	m	0,08	0,08	0,1	0,1	0,13	0,08	0,08	0,1	0,1	0,13
Foreign material	–	Not permitted					Not permitted				

7

rgab.ru Берг АБ bergab@ya.ru Тел. (495)-228-06-21, факс (495) 2

rgab.ru Берг АБ bergab@ya.ru Тел. (495)-228-06-21, факс (495) 2

Swedish standard SMS 1588

Dynamic installation, radial squeeze

Surface roughness value
The surfaces of the piston rod or cylinder tube against which the O-ring is supposed to seal dynamically should have a surface roughness value of max 0,63 µm R_a. The groove bottom should have a surface roughness value of max l,6 µm R_a and the groove sides a surface roughness value of max 3,2 µm R_a. The higher values can be used at operating conditions with low movement intensity and moderate demands on service life.

Tolerances
Please study **Table 1**, **page 260**, for tolerances for O-ring housing in cylinder bore and in rod.

Installation dimensions
Installation dimensions can be found in **Table 1**, **page 260**.

Static installation, radial squeeze

Surface roughness value
The surfaces against which the O-ring shall seal should have a surface roughness value of max 3,2 µm R_a. At strong pulsating pressure the O-ring will move and be exposed to wear. Lower surface roughness values, e.g. max 1,6 µm R_a, should therefore be striven for in order to reach sufficient service life. The surfaces should have a smooth character, especially at low pressure and low temperature.

O-ring housing in cylinder bore

Tolerances
Tolerances for O-ring housing in cylinder bore can be found in **Table 2**, **page 262**.

Installation dimensions
Installation dimensions for O-ring housing in cylinder bore can be found in **Table 2**, **page 262**.

O-ring housing in rod

Tolerances
Tolerances for O-ring housing in rod can be found in **Table 3**, **page 264**.

Installation dimensions
Please read **Table 3**, **page 264**, for installation dimensions for O-ring housing in rod.

rgab.ru Берг АБ bergab@ya.ru Тел. (495)-228-06-21, факс (495) 2

rgab.ru Берг АБ bergab@ya.ru Тел. (495)-228-06-21, факс (495) 22

Static installation, axial squeeze

To seal at external overpressure, P_1, only closed O-ring housings can be used, see **Table 4**, **page 266**.

To seal at internal overpressure, P_2, both closed and open O-ring housings can be used, see **Table 4**, **page 266**.

The sides and bottom of the O-ring housing may have the surface finish R_a = 3,2 µm (R_{max} = 12,5 µm).

Installation dimensions

Please see **Table 4**, **page 266**, for installation dimensions at external and internal overpressure.

rgab.ru Берг АБ bergab@ya.ru Тел. (495)-228-06-21, факс (495) 22

rgab.ru Берг АБ bergab@ya.ru Тел. (495)-228-06-21, факс (495) 2

Table **1**

Dynamic installation, radial squeeze

Tolerances, O-ring housing in cylinder bore

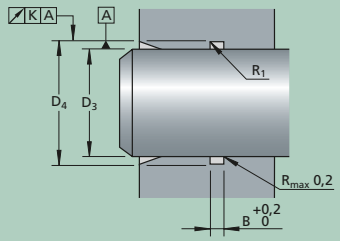

Diameter range Basic measure over	incl.	D_4	D_3 Rod	D_3 Cyl. bore	K
mm		–			
3	**120**	H11	f8	H9	0,06
120	**–**	H11	f7	H8	0,1

Tolerances, O-ring housing in rod

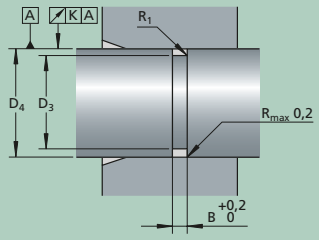

Diameter range Basic measure over	incl.	D_4	D_3 Rod	D_3 Cyl. bore	K
mm		–			
3	**120**	h11	f8	H9	0,06
120	**–**	h11	f7	H8	0,1

Installation dimensions

O-ring[1] d × d_2	D_3	D_4	B +0,2 0	R_1
mm				
3,3 × 2,4	4	8	3,2	0,5
4,3 × 2,4	5	9	3,2	0,5
5,3 × 2,4	6	10	3,2	0,5
6,3 × 2,4	7	11	3,2	0,5
7,3 × 2,4	8	12	3,2	0,5
8,3 × 2,4	9	13	3,2	0,5
9,3 × 2,4	10	14	3,2	0,5
10,3 × 2,4	11	15	3,2	0,5
11,3 × 2,4	12	16	3,2	0,5
12,3 × 2,4	13	17	3,2	0,5
13,3 × 2,4	14	18	3,2	0,5
14,3 × 2,4	15	19	3,2	0,5
15,3 × 2,4	16	20	3,2	0,5
16,3 × 2,4	17	21	3,2	0,5
17,3 × 2,4	18	22	3,2	0,5
19,2 × 3	20	25	4	1
22,2 × 3	23	28	4	1
24,2 × 3	25	30	4	1
26,2 × 3	27	32	4	1
29,2 × 3	30	35	4	1
32,2 × 3	33	38	4	1
34,2 × 3	35	40	4	1
36,2 × 3	37	42	4	1
39,2 × 3	40	45	4	1
42,2 × 3	43	48	4	1
44,2 × 3	45	50	4	1

O-ring[1] d × d_2	D_3	D_4	B +0,2 0	R_1
mm				
44,2 × 5,7	45	55	7,5	1
49,2 × 5,7	50	60	7,5	1
54,2 × 5,7	55	65	7,5	1
59,2 × 5,7	60	70	7,5	1
64,2 × 5,7	65	75	7,5	1
69,2 × 5,7	70	80	7,5	1
74,2 × 5,7	75	85	7,5	1
79,2 × 5,7	80	90	7,5	1
84,1 × 5,7	85	95	7,5	1
89,1 × 5,7	90	100	7,5	1
94,1 × 5,7	95	105	7,5	1
99,1 × 5,7	100	110	7,5	1
104,1 × 5,7	105	115	7,5	1
109,1 × 5,7	110	120	7,5	1
114,3 × 5,7	115	125	7,5	1
119,3 × 5,7	120	130	7,5	1
124,4 × 5,7	125	135	7,5	1
129,3 × 5,7	130	140	7,5	1
134,3 × 5,7	135	145	7,5	1
139,3 × 5,7	140	150	7,5	1
144,3 × 5,7	145	155	7,5	1
144,1 × 8,4	145	160	11	1
149,1 × 8,4	150	165	11	1
154,1 × 8,4	155	170	11	1
159,1 × 8,4	160	175	11	1
164,1 × 8,4	165	180	11	1
169,1 × 8,4	170	185	11	1

[1] According to SMS 1586

rgab.ru Берг АБ bergab@ya.ru Тел. (495)-228-06-21, факс (495) 2

rgab.ru Берг АБ bergab@ya.ru Тел. (495)-228-06-21, факс (495) 2

Continuation of **Table 1**

O-ring[1] d × d_2	D_3	D_4	B +0,2 0	R_1
mm				
174,1 × 8,4	175	190	11	1
179,1 × 8,4	180	195	11	1
184,1 × 8,4	185	200	11	1
189,1 × 8,4	190	205	11	1
194,1 × 8,4	195	210	11	1
199,1 × 8,4	200	215	11	1
209,1 × 8,4	210	225	11	1
219,1 × 8,4	220	235	11	1
229,1 × 8,4	230	245	11	1
239,1 × 8,4	240	255	11	1
249,1 × 8,4	250	265	11	1

[1] According to SMS 1586

rgab.ru Берг АБ bergab@ya.ru Тел. (495)-228-06-21, факс (495) 2

rgab.ru Берг АБ bergab@ya.ru Тел. (495)-228-06-21, факс (495) 22

Table **2**

Static installation, radial squeeze, O-ring housing in cylinder bore

Tolerances

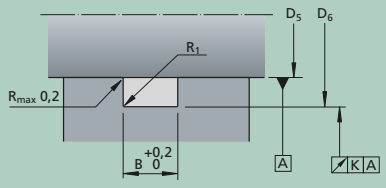

Diameter range Basic measure over	incl.	D_6	D_5 Rod	Cyl. bore	K
mm	–				
3	**120**	H11	h8	H9	0,06
120	**–**	H11	h7	H8	0,1

Installation dimensions

O-ring[1] d × d_2	D_5	D_6	B +0,2 0	R_1
mm				
3,1 × 1,6	3,5	5,8	2,3	0,5
4,1 × 1,6	4,5	6,8	2,3	0,5
5,1 × 1,6	5,5	7,8	2,3	0,5
6,1 × 1,6	6,5	8,8	2,3	0,5
7,1 × 1,6	7,5	9,8	2,3	0,5
8,1 × 1,6	8,5	10,8	2,3	0,5
9,1 × 1,6	9,5	11,8	2,3	0,5
10,1 × 1,6	10,5	12,8	2,3	0,5
11,1 × 1,6	11,5	13,8	2,3	0,5
12,1 × 1,6	12,5	14,8	2,3	0,5
13,1 × 1,6	13,5	15,8	2,3	0,5
14,1 × 1,6	14,5	16,8	2,3	0,5
15,1 × 1,6	15,5	17,8	2,3	0,5
16,1 × 1,6	16,5	18,8	2,3	0,5
17,1 × 1,6	17,5	19,8	2,3	0,5
18,1 × 1,6	18,5	20,8	2,3	0,5
19,1 × 1,6	19,5	21,8	2,3	0,5
22,1 × 1,6	22,5	24,8	2,3	0,5
25,1 × 1,6	25,5	27,8	2,3	0,5
27,1 × 1,6	27,5	29,8	2,3	0,5
29,1 × 1,6	29,5	31,8	2,3	0,5
32,1 × 1,6	32,5	34,8	2,3	0,5
35,1 × 1,6	35,5	37,8	2,3	0,5
37,1 × 1,6	37,5	39,8	2,3	0,5
3,3 × 2,4	4	7,7	3,1	0,5
4,3 × 2,4	5	8,7	3,1	0,5
5,3 × 2,4	6	9,7	3,1	0,5

O-ring[1] d × d_2	D_5	D_6	B +0,2 0	R_1
mm				
6,3 × 2,4	7	10,7	3,1	0,5
7,3 × 2,4	8	11,7	3,1	0,5
8,3 × 2,4	9	12,7	3,1	0,5
9,3 × 2,4	10	13,7	3,1	0,5
10,3 × 2,4	11	14,7	3,1	0,5
11,3 × 2,4	12	15,7	3,1	0,5
12,3 × 2,4	13	16,7	3,1	0,5
13,3 × 2,4	14	17,7	3,1	0,5
14,3 × 2,4	15	18,7	3,1	0,5
15,3 × 2,4	16	19,7	3,1	0,5
16,3 × 2,4	17	20,7	3,1	0,5
17,3 × 2,4	18	21,7	3,1	0,5
19,2 × 3	20	24,8	3,7	1
22,2 × 3	23	27,8	3,7	1
24,2 × 3	25	29,8	3,7	1
26,2 × 3	27	31,8	3,7	1
29,2 × 3	30	34,8	3,7	1
32,2 × 3	33	37,8	3,7	1
34,2 × 3	35	39,8	3,7	1
36,2 × 3	37	41,8	3,7	1
39,2 × 3	40	44,8	3,7	1
42,2 × 3	43	47,8	3,7	1
44,2 × 3	45	49,8	3,7	1
49,5 × 3	50	54,8	3,7	1
54,5 × 3	55	59,8	3,7	1
59,5 × 3	60	64,8	3,7	1
64,5 × 3	65	69,8	3,7	1

[1] According to SMS 1586

rgab.ru Берг АБ bergab@ya.ru Тел. (495)-228-06-21, факс (495) 22

rgab.ru Берг АБ bergab@ya.ru Тел. (495)-228-06-21, факс (495) 22

Continuation of **Table 2**

O-ring[1] d × d_2	D_5	D_6	B +0,2 0	R_1
mm				
69,5 × 3	70	74,8	3,7	1
74,5 × 3	75	79,8	3,7	1
79,5 × 3	80	84,8	3,7	1
84,5 × 3	85	89,8	3,7	1
89,5 × 3	90	94,8	3,7	1
94,5 × 3	95	99,8	3,7	1
99,5 × 3	100	104,8	3,7	1
104,5 × 3	105	109,8	3,7	1
109,5 × 3	110	114,8	3,7	1
114,5 × 3	115	119,8	3,7	1
119,5 × 3	120	124,8	3,7	1
124,5 × 3	125	129,8	3,7	1
129,5 × 3	130	134,8	3,7	1
134,5 × 3	135	139,8	3,7	1
139,5 × 3	140	144,8	3,7	1
144,5 × 3	145	149,8	3,7	1
44,2 × 5,7	45	54,7	6,4	1
49,2 × 5,7	50	59,7	6,4	1
54,2 × 5,7	55	64,7	6,4	1
59,2 × 5,7	60	69,7	6,4	1
64,2 × 5,7	65	74,7	6,4	1
69,2 × 5,7	70	79,7	6,4	1
74,2 × 5,7	75	84,7	6,4	1
79,2 × 5,7	80	89,7	6,4	1
84,1 × 5,7	85	94,7	6,4	1
89,1 × 5,7	90	99,7	6,4	1
94,1 × 5,7	95	104,7	6,4	1
99,1 × 5,7	100	109,7	6,4	1
104,1 × 5,7	105	114,7	6,4	1
109,1 × 5,7	110	119,7	6,4	1
114,3 × 5,7	115	124,7	6,4	1
119,3 × 5,7	120	129,7	6,4	1
124,3 × 5,7	125	134,7	6,4	1
129,3 × 5,7	130	139,7	6,4	1
134,3 × 5,7	135	144,7	6,4	1
139,3 × 5,7	140	149,7	6,4	1
144,3 × 5,7	145	154,7	6,4	1
149,3 × 5,7	150	159,6	6,4	1
154,3 × 5,7	155	164,6	6,4	1
159,3 × 5,7	160	169,6	6,4	1
164,3 × 5,7	165	174,6	6,4	1
169,3 × 5,7	170	179,6	6,4	1
174,3 × 5,7	175	184,6	6,4	1
179,3 × 5,7	180	189,6	6,4	1
184,3 × 5,7	185	194,6	6,4	1
189,3 × 5,7	190	199,6	6,4	1
194,3 × 5,7	195	204,6	6,4	1
199,3 × 5,7	200	209,6	6,4	1
209,3 × 5,7	210	219,6	6,4	1
219,3 × 5,7	220	229,6	6,4	1
229,3 × 5,7	230	239,6	6,4	1
239,3 × 5,7	240	249,6	6,4	1
249,3 × 5,7	250	259,6	6,4	1
259,3 × 5,7	260	269,6	6,4	1
269,3 × 5,7	270	279,6	6,4	1
279,3 × 5,7	280	289,6	6,4	1
289,3 × 5,7	290	299,6	6,4	1
299,3 × 5,7	300	309,6	6,4	1
319,3 × 5,7	320	329,6	6,4	1
339,3 × 5,7	340	349,6	6,4	1
359,3 × 5,7	360	369,6	6,4	1
379,3 × 5,7	380	389,6	6,4	1
399,3 × 5,7	400	409,6	6,4	1
419,3 × 5,7	420	429,6	6,4	1
439,3 × 5,7	440	449,6	6,4	1
459,3 × 5,7	460	469,6	6,4	1
479,3 × 5,7	480	489,6	6,4	1
499,3 × 5,7	500	509,6	6,4	1
144,1 × 8,4	145	160	6,4	1
149,1 × 8,4	150	165	6,4	1
154,1 × 8,4	155	170	6,4	1
159,1 × 8,4	160	175	6,4	1
164,1 × 8,4	165	180	6,4	1
169,1 × 8,4	170	185	9	1
174,1 × 8,4	175	190	9	1
179,1 × 8,4	180	195	9	1
184,1 × 8,4	185	200	9	1
189,1 × 8,4	190	205	9	1
194,1 × 8,4	195	210	9	1
199,1 × 8,4	200	215	9	1
209,1 × 8,4	210	225	9	1
219,1 × 8,4	220	235	9	1
229,1 × 8,4	230	245	9	1
239,1 × 8,4	240	255	9	1
249,1 × 8,4	250	265	9	1

[1] According to SMS 1586

7

rgab.ru Берг АБ bergab@ya.ru Тел. (495)-228-06-21, факс (495) 22

rgab.ru Берг АБ bergab@ya.ru Тел. (495)-228-06-21, факс (495) 22

Table 3

Static installation, radial squeeze, O-ring housing in rod

Tolerances

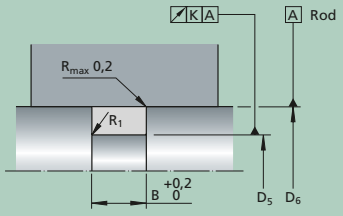

Diameter range Basic measure over	incl.	D_5	D_6 Rod	Cyl. bore	K
mm	–				
3	**120**	h11	h8	H9	0,06
120	–	h11	h7	H8	0,1

Installation dimensions

O-ring[1] d × d_2	D_5	D_6	B +0,2 0	R_1
mm				
3,1 × 1,6	3,8	6	2,3	0,5
4,1 × 1,6	4,8	7	2,3	0,5
5,1 × 1,6	5,8	8	2,3	0,5
6,1 × 1,6	6,8	9	2,3	0,5
7,1 × 1,6	7,8	10	2,3	0,5
8,1 × 1,6	8,8	11	2,3	0,5
9,1 × 1,6	9,8	12	2,3	0,5
10,1 × 1,6	10,8	13	2,3	0,5
11,1 × 1,6	11,8	14	2,3	0,5
12,1 × 1,6	12,8	15	2,3	0,5
13,1 × 1,6	13,8	16	2,3	0,5
14,1 × 1,6	14,8	17	2,3	0,5
15,1 × 1,6	15,8	18	2,3	0,5
16,1 × 1,6	16,8	19	2,3	0,5
17,1 × 1,6	17,8	20	2,3	0,5
18,1 × 1,6	18,8	21	2,3	0,5
19,1 × 1,6	19,8	22	2,3	0,5
22,1 × 1,6	22,8	25	2,3	0,5
25,1 × 1,6	25,8	28	2,3	0,5
27,1 × 1,6	27,8	30	2,3	0,5
29,1 × 1,6	29,8	32	2,3	0,5
32,1 × 1,6	32,8	35	2,3	0,5
35,1 × 1,6	35,8	38	2,3	0,5
37,1 × 1,6	37,8	40	2,3	0,5
3,3 × 2,4	4,4	8	3,1	0,5
4,3 × 2,4	5,4	9	3,1	0,5
5,3 × 2,4	6,4	10	3,1	0,5

O-ring[1] d × d_2	D_5	D_6	B +0,2 0	R_1
mm				
6,3 × 2,4	7,4	11	3,1	0,5
7,3 × 2,4	8,4	12	3,1	0,5
8,3 × 2,4	9,4	13	3,1	0,5
9,3 × 2,4	10,4	14	3,1	0,5
10,3 × 2,4	11,4	15	3,1	0,5
11,3 × 2,4	12,4	16	3,1	0,5
12,3 × 2,4	13,4	17	3,1	0,5
13,3 × 2,4	14,4	18	3,1	0,5
14,3 × 2,4	15,4	19	3,1	0,5
15,3 × 2,4	16,4	20	3,1	0,5
16,3 × 2,4	17,4	21	3,1	0,5
17,3 × 2,4	18,4	22	3,1	0,5
19,2 × 3	20,2	25	3,7	1
22,2 × 3	23,2	28	3,7	1
24,2 × 3	25,2	30	3,7	1
26,2 × 3	27,2	32	3,7	1
29,2 × 3	30,2	35	3,7	1
32,2 × 3	33,2	38	3,7	1
34,2 × 3	35,2	40	3,7	1
36,2 × 3	37,2	42	3,7	1
39,2 × 3	40,2	45	3,7	1
42,2 × 3	43,2	48	3,7	1
44,2 × 3	45,2	50	3,7	1
49,5 × 3	50,2	55	3,7	1
54,5 × 3	55,2	60	3,7	1
59,5 × 3	60,2	65	3,7	1
64,5 × 3	65,2	70	3,7	1

[1] According to SMS 1586

rgab.ru Берг АБ bergab@ya.ru Тел. (495)-228-06-21, факс (495) 22

rgab.ru Берг АБ bergab@ya.ru Тел. (495)-228-06-21, факс (495) 22

Continuation of **Table 3**

O-ring[1] d × d_2	D_5	D_6	B +0,2 0	R_1
mm				
69,5 × 3	70,2	75	3,7	1
74,5 × 3	75,2	80	3,7	1
79,5 × 3	80,2	85	3,7	1
84,5 × 3	85,2	90	3,7	1
89,5 × 3	90,2	95	3,7	1
94,5 × 3	95,2	100	3,7	1
99,5 × 3	100,2	105	3,7	1
104,5 × 3	105,2	110	3,7	1
109,5 × 3	110,2	115	3,7	1
114,5 × 3	115,2	120	3,7	1
119,5 × 3	120,2	125	3,7	1
124,5 × 3	125,2	130	3,7	1
129,5 × 3	130,2	135	3,7	1
134,5 × 3	135,2	140	3,7	1
139,5 × 3	140,2	145	3,7	1
144,5 × 3	145,2	150	3,7	1
44,2 × 5,7	45,3	55	6,4	1
49,2 × 5,7	50,3	60	6,4	1
54,2 × 5,7	55,3	65	6,4	1
59,2 × 5,7	60,3	70	6,4	1
64,2 × 5,7	65,3	75	6,4	1
69,2 × 5,7	70,3	80	6,4	1
74,2 × 5,7	75,3	85	6,4	1
79,2 × 5,7	80,3	90	6,4	1
84,1 × 5,7	85,3	95	6,4	1
89,1 × 5,7	90,3	100	6,4	1
94,1 × 5,7	95,3	105	6,4	1
99,1 × 5,7	100,3	110	6,4	1
104,1 × 5,7	105,3	115	6,4	1
109,1 × 5,7	110,3	120	6,4	1
114,3 × 5,7	115,3	125	6,4	1
119,3 × 5,7	120,3	130	6,4	1
124,3 × 5,7	125,3	135	6,4	1
129,3 × 5,7	130,3	140	6,4	1
134,3 × 5,7	135,3	145	6,4	1
139,3 × 5,7	140,3	150	6,4	1
144,3 × 5,7	145,3	155	6,4	1
149,3 × 5,7	150,4	160	6,4	1
154,3 × 5,7	155,4	165	6,4	1
159,3 × 5,7	160,4	170	6,4	1
164,3 × 5,7	165,4	175	6,4	1
169,3 × 5,7	170,4	180	6,4	1
174,3 × 5,7	175,4	185	6,4	1
179,3 × 5,7	180,4	190	6,4	1
184,3 × 5,7	185,4	195	6,4	1
189,3 × 5,7	190,4	200	6,4	1
194,3 × 5,7	195,4	205	6,4	1
199,3 × 5,7	200,4	210	6,4	1
209,3 × 5,7	210,4	220	6,4	1
219,3 × 5,7	220,4	230	6,4	1
229,3 × 5,7	230,4	240	6,4	1
239,3 × 5,7	240,4	250	6,4	1
249,3 × 5,7	250,4	260	6,4	1
259,3 × 5,7	260,4	270	6,4	1
269,3 × 5,7	270,4	280	6,4	1
279,3 × 5,7	280,4	290	6,4	1
289,3 × 5,7	290,4	300	6,4	1
299,3 × 5,7	300,4	310	6,4	1
319,3 × 5,7	320,4	330	6,4	1
339,3 × 5,7	340,4	350	6,4	1
359,3 × 5,7	360,4	370	6,4	1
379,3 × 5,7	380,4	390	6,4	1
399,3 × 5,7	400,4	410	6,4	1
419,3 × 5,7	420,4	430	6,4	1
439,3 × 5,7	440,4	450	6,4	1
459,3 × 5,7	460,4	470	6,4	1
479,3 × 5,7	480,4	490	6,4	1
499,3 × 5,7	500,4	510	6,4	1
144,1 × 8,4	145	160	9	1
149,1 × 8,4	150	165	9	1
154,1 × 8,4	155	170	9	1
159,1 × 8,4	160	175	9	1
164,1 × 8,4	165	180	9	1
169,1 × 8,4	170	185	9	1
174,1 × 8,4	175	190	9	1
179,1 × 8,4	180	195	9	1
184,1 × 8,4	185	200	9	1
189,1 × 8,4	190	205	9	1
194,1 × 8,4	195	210	9	1
199,1 × 8,4	200	215	9	1
209,1 × 8,4	210	225	9	1
219,1 × 8,4	220	235	9	1
229,1 × 8,4	230	245	9	1
239,1 × 8,4	240	255	9	1
249,1 × 8,4	250	265	9	1

[1] According to SMS 1656

7

rgab.ru Берг АБ bergab@ya.ru Тел. (495)-228-06-21, факс (495) 22

rgab.ru Берг АБ bergab@ya.ru Тел. (495)-228-06-21, факс (495) 2

Table **4**

Static installation, axial squeeze

External overpressure
Closed O-ring housings

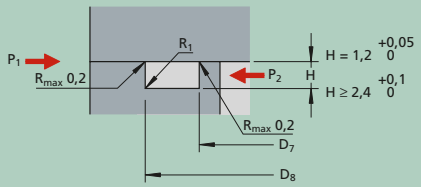

Internal overpressure
Open O-ring housings

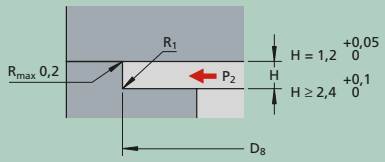

Installation dimensions

O-ring[1]	Groove dimensions Overpressure external		internal		H	R_1
$d \times d_2$	P_1 D_8 min	D_7 h11	P_2 D_8 H11	D_7 max		
mm	mm					
3,1 × 1,6	7,4	3,5	6,3	–	1,2	0,2
4,1 × 1,6	8,4	4,5	7,3	2,1	1,2	0,2
5,1 × 1,6	9,4	5,5	8,3	3,5	1,2	0,2
6,1 × 1,6	10,4	6,5	9,3	4,7	1,2	0,2
7,1 × 1,6	11,4	7,5	10,3	5,8	1,2	0,2
8,1 × 1,6	12,4	8,5	11,3	6,8	1,2	0,2
9,1 × 1,6	13,4	9,5	12,3	7,9	1,2	0,2
10,1 × 1,6	14,5	10,5	13,3	8,9	1,2	0,2
11,1 × 1,6	15,5	11,5	14,3	10	1,2	0,2
12,1 × 1,6	16,5	12,5	15,3	11	1,2	0,2
13,1 × 1,6	17,5	13,5	16,3	12	1,2	0,2
14,1 × 1,6	18,5	14,5	17,3	13	1,2	0,2
15,1 × 1,6	19,5	15,5	18,3	14	1,2	0,2
16,1 × 1,6	20,5	16,5	19,3	15,1	1,2	0,2
17,1 × 1,6	21,5	17,5	20,3	16,1	1,2	0,2
18,1 × 1,6	22,5	18,5	21,3	17,1	1,2	0,2
19,1 × 1,6	23,5	19,5	22,3	18,1	1,2	0,2
22,1 × 1,6	26,5	22,5	25,3	21,1	1,2	0,2
25,1 × 1,6	29,5	25,5	28,3	24,2	1,2	0,2
27,1 × 1,6	31,5	27,5	30,3	26,2	1,2	0,2
29,1 × 1,6	33,5	29,5	32,3	28,2	1,2	0,2
32,1 × 1,6	36,5	32,5	35,3	31,2	1,2	0,2
35,1 × 1,6	39,5	35,5	38,3	34,2	1,2	0,2
37,1 × 1,6	41,5	37,5	40,3	36,2	1,2	0,2
3,3 × 2,4	10	4	8,7	–	1,7	0,5
4,3 × 2,4	11	5	9,6	2,3	1,7	0,5
5,3 × 2,4	12	6	10,4	2,5	1,7	0,5
6,3 × 2,4	13	7	11,4	3,9	1,7	0,5
7,3 × 2,4	14	8	12,3	5,1	1,7	0,5
8,3 × 2,4	15	9	13,3	6,3	1,7	0,5
9,3 × 2,4	16	10	14,3	7,4	1,7	0,5
10,3 × 2,4	17	11	15,3	8,5	1,7	0,5
11,3 × 2,4	18	12	16,3	9,5	1,7	0,5
12,3 × 2,4	19	13	17,3	10,5	1,7	0,5
13,3 × 2,4	20	14	18,3	11,5	1,7	0,5
14,3 × 2,4	21	15	19,3	12,5	1,7	0,5

[1] According to SMS 1586

O-ring[1]	Groove dimensions Overpressure external		internal		H	R_1
$d \times d_2$	P_1 D_8 min	D_7 h11	P_2 D_8 H11	D_7 max		
mm	mm					
15,3 × 2,4	22	16	20,3	13,5	1,7	0,5
16,3 × 2,4	23	17	21,3	14,5	1,7	0,5
17,3 × 2,4	24	18	22,3	15,5	1,7	0,5
19,2 × 3	27,5	20	25	16,7	2,2	1
22,2 × 3	30,5	23	28	19,7	2,2	1
24,2 × 3	32,5	25	30	21,7	2,2	1
26,2 × 3	34,5	27	32	23,7	2,2	1
29,2 × 3	37,5	30	35	26,8	2,2	1
32,2 × 3	40,5	33	38	29,8	2,2	1
34,2 × 3	42,5	35	40	31,8	2,2	1
36,2 × 3	44,5	37	42	33,8	2,2	1
39,2 × 3	47,5	40	45	36,8	2,2	1
42,2 × 3	50,5	43	48	39,8	2,2	1
44,2 × 3	53	45	50	42	2,2	1
49,5 × 3	58	50	55	47	2,2	1
54,5 × 3	63	55	60	52	2,2	1
59,5 × 3	68	60	65	57	2,2	1
64,5 × 3	73	65	70	62	2,2	1
69,5 × 3	78	70	75	67	2,2	1
74,5 × 3	83	75	80	72	2,2	1
79,5 × 3	88	80	85	77	2,2	1
84,5 × 3	93	85	90	82	2,2	1
89,5 × 3	98	90	95	87	2,2	1
94,5 × 3	103	95	100	92	2,2	1
99,5 × 3	108	100	105	97	2,2	1
104,5 × 3	113	105	110	102	2,2	1
109,5 × 3	118	110	115	107	2,2	1
114,5 × 3	123	115	120	112	2,2	1
119,5 × 3	128	120	125	117	2,2	1
124,5 × 3	133	125	130	122	2,2	1
129,5 × 3	138	130	135	127	2,2	1
134,5 × 3	143	135	140	132	2,2	1
139,5 × 3	148	140	145	137	2,2	1
144,5 × 3	153	145	150	142	2,2	1

rgab.ru Берг АБ bergab@ya.ru Тел. (495)-228-06-21, факс (495) 2

rgab.ru Берг АБ bergab@ya.ru Тел. (495)-228-06-21, факс (495) 2

O-ring[1]	Groove dimensions					
	Overpressure				H	R_1
	external		internal			
	P_1		P_2			
$d \times d_2$	D_8	D_7	D_8	D_7		
	min	h11	H11	max		
mm	mm					
44,2 × 5,7	59	45	55	40	4,4	1
49,2 × 5,7	64	50	60	45	4,4	1
54,2 × 5,7	69	55	65	50	4,4	1
59,2 × 5,7	74	60	70	55	4,4	1
64,2 × 5,7	79	65	75	60	4,4	1
69,2 × 5,7	84	70	80	65	4,4	1
74,2 × 5,7	89	75	85	70	4,4	1
79,2 × 5,7	94	80	90	75	4,4	1
84,1 × 5,7	99	85	95	80	4,4	1
89,1 × 5,7	104	90	100	85	4,4	1
94,1 × 5,7	109	95	105	90	4,4	1
99,1 × 5,7	114	100	110	95	4,4	1
104,1 × 5,7	119	105	115	100	4,4	1
109,1 × 5,7	124	110	120	105	4,4	1
114,3 × 5,7	129	115	125	110	4,4	1
119,3 × 5,7	134	120	130	115	4,4	1
124,3 × 5,7	139	125	135	120	4,4	1
129,3 × 5,7	144	130	140	125	4,4	1
134,3 × 5,7	149	135	145	130	4,4	1
139,3 × 5,7	154	140	150	135	4,4	1
144,3 × 5,7	159	145	155	140	4,4	1
149,3 × 5,7	164	150	160	145	4,4	1
154,3 × 5,7	169	155	165	150	4,4	1
159,3 × 5,7	174	160	170	155	4,4	1
164,3 × 5,7	179	165	775	160	4,4	1
169,3 × 5,7	184	170	180	165	4,4	1
174,3 × 5,7	189	175	185	170	4,4	1
179,3 × 5,7	194	180	190	175	4,4	1
184,3 × 5,7	199	185	195	180	4,4	1
189,3 × 5,7	204	190	199	184	4,4	1
194,3 × 5,7	209	195	204	189	4,4	1
199,3 × 5,7	214	200	209	194	4,4	1
209,3 × 5,7	224	210	219	204	4,4	1
219,3 × 5,7	234	220	229	214	4,4	1
229,3 × 5,7	244	230	239	224	4,4	1
239,3 × 5,7	254	240	249	234	4,4	1
249,3 × 5,7	264	250	259	244	4,4	1
259,3 × 5,7	274	261	269	254	4,4	1
269,3 × 5,7	285	271	279	264	4,4	1
279,3 × 5,7	295	281	289	274	4,4	1
289,3 × 5,7	305	291	299	284	4,4	1
299,3 × 5,7	315	301	309	294	4,4	1
319,3 × 5,7	335	321	329	314	4,4	1
339,3 × 5,7	355	341	349	334	4,4	1
359,3 × 5,7	375	361	369	354	4,4	1
379,3 × 5,7	395	381	389	374	4,4	1
399,3 × 5,7	415	401	409	394	4,4	1
419,3 × 5,7	436	422	428	413	4,4	1

O-ring[1]	Groove dimensions					
	Overpressure				H	R_1
	external		internal			
	P_1		P_2			
$d \times d_2$	D_8	D_7	D_8	D_7		
	min	h11	H11	max		
mm	mm					
439,3 × 5,7	456	442	448	433	4,4	1
459,3 × 5,7	476	462	468	453	4,4	1
479,3 × 5,7	496	482	488	473	4,4	1
499,3 × 5,7	516	502	508	493	4,4	1
144,1 × 8,4	165	145	160	140	6,6	1
149,1 × 8,4	170	150	165	145	6,6	1
154,1 × 8,4	175	155	170	150	6,6	1
159,1 × 8,4	180	160	175	155	6,6	1
164,1 × 8,4	185	165	180	160	6,6	1
169,1 × 8,4	190	170	185	165	6,6	1
174,1 × 8,4	195	175	190	170	6,6	1
179,1 × 8,4	200	180	195	175	6,6	1
184,1 × 8,4	205	185	199	179	6,6	1
189,1 × 8,4	210	190	204	184	6,6	1
194,1 × 8,4	215	195	209	189	6,6	1
199,1 × 8,4	220	200	214	194	6,6	1
209,1 × 8,4	230	210	224	204	6,6	1
219,1 × 8,4	240	220	234	214	6,6	1
229,1 × 8,4	250	230	244	224	6,6	1
239,1 × 8,4	260	240	254	234	6,6	1
249,1 × 8,4	270	250	264	244	6,6	1

[1] According to SMS 1586

rgab.ru Берг АБ bergab@ya.ru Тел. (495)-228-06-21, факс (495) 2

rgab.ru Берг АБ bergab@ya.ru Тел. (495)-228-06-21, факс (495) 2

English-American standard

Dynamic installation, radial squeeze

Surface roughness value
The surfaces of the piston rod or cylinder tube against which the O-ring is supposed to seal dynamically should have a surface roughness value of max 0,63 µm R_a. The groove bottom should have a surface roughness value of max 1,6 µm R_a and the groove sides a surface roughness value of max 3,2 µm R_a. The higher values can be used at operating conditions with low movement intensity and moderate demands on service life.

Tolerances
Please study **Table 1**, **page 270**, for instructions regarding tolerances for O-ring housing in cylinder bore and regarding tolerances for O-ring housing in rod.

Installation dimensions
Please see **Table 1**, **page 270**, for installation dimensions for O-ring housing in rod and cylinder bore.

Static installation, radial squeeze

Surface roughness value
The surfaces against which the O-ring shall seal should have a surface roughness value of max 3,2 µm R_a. At strong pulsating pressure the O-ring will move and be exposed to wear. Lower surface roughness values, e.g. max 1,6 µm R_a, should therefore be striven for in order to reach sufficient service life. The surfaces should have a smooth character, especially at low pressure and low temperature.

O-ring housing in cylinder bore

Tolerances
Please study **Table 2**, **page 274**, for instructions regarding tolerances for O-ring housing in cylinder bore.

Housing dimensions
Housing dimensions can be found in **Table 2**, **page 274**.

Installation dimensions
Please read **Table 2**, **page 274**, for installation dimensions for O-ring housing in cylinder bore.

rgab.ru Берг АБ bergab@ya.ru Тел. (495)-228-06-21, факс (495) 2

rgab.ru Берг АБ bergab@ya.ru Тел. (495)-228-06-21, факс (495) 2

O-ring housing in rod

Tolerances
Please study **Table 3**, **page 278**, for instructions regarding tolerances for O-ring housing in rod.

Housing dimensions
Housing dimensions can be found in **Table 3**, **page 278**.

Installation dimensions
Please read **Table 3**, **page 278**, for installation dimensions for O-ring housing in rod.

Static installation, axial squeeze

Surface roughness value
The surfaces against which the O-ring shall seal should have a surface roughness value of max 3,2 µm R_a. At strong pulsating pressure the O-ring will move and be exposed to wear. Lower surface roughness values, e.g. max 1,6 µm R_a, should therefore be striven for in order to reach sufficient service life. The surfaces should have a smooth character, especially at low pressure and low temperature.

Open or closed seal housing groove
When sealing against external overpressure only closed seal housing grooves can be used. When sealing against internal overpressure open as well as closed seal housing grooves can be used, see **Table 4**, **page 282**.

Groove dimensions
Groove dimensions can be found in **Table 4**, **page 282**.

Installation dimensions
Please read **Table 4**, **page 282** for installation dimensions.

rgab.ru Берг АБ bergab@ya.ru Тел. (495)-228-06-21, факс (495) 2

rgab.ru Берг АБ bergab@ya.ru Тел. (495)-228-06-21, факс (495) 2

Table 1

Dynamic installation, radial squeeze

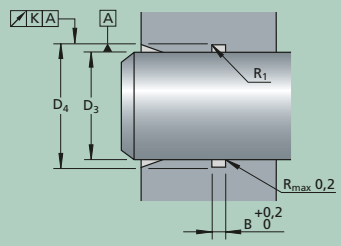

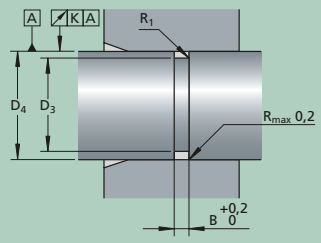

Tolerances for O-ring housing in cylinder bore

Diameter range Basic measure over	incl.	D_4	D_3 Rod	Cyl. bore	K
mm		–			
3	**120**	H11	f8	H9	0,06
120	–	H11	f7	H8	0,1

Tolerances for O-ring housing in rod

Diameter range Basic measure over	incl.	D_3	D_3 Rod	Cyl. bore	K
mm		–			
3	**120**	h11	f8	H9	0,06
120	–	h11	f7	H8	0,1

Installation dimensions

O-ring $d \times d_2$	Housing in rod D_3	Housing in rod D_4	Housing in cylinder bore D_3	Housing in cylinder bore D_4	B	R_1
mm						
2,90 × 1,78	3,48	6,35	3,12	5,97	2,4	0,5
3,69 × 1,78	4,27	7,14	3,91	6,76	2,4	0,5
4,48 × 1,78	5,06	7,93	4,70	7,55	2,4	0,5
5,28 × 1,78	5,86	8,74	5,51	8,35	2,4	0,5
6,07 × 1,78	6,65	9,53	6,30	9,14	2,4	0,5
6,75 × 1,78	7,44	10,32	7,08	9,92	2,4	0,5
7,66 × 1,78	8,24	11,11	7,87	10,73	2,4	0,5
8,73 × 1,78	9,41	12,30	9,07	11,91	2,4	0,5
9,25 × 1,78	9,83	12,70	9,47	12,32	2,4	0,5
9,19 × 2,62	9,74	14,29	9,47	14,00	3,6	0,75
9,92 × 2,62	10,53	15,08	10,26	14,79	3,6	0,75
10,78 × 2,62	11,32	15,88	11,05	15,57	3,6	0,75
11,91 × 2,62	12,51	17,07	12,24	16,77	3,6	0,75
12,37 × 2,62	12,92	17,46	12,65	17,17	3,6	0,75
13,10 × 2,62	13,73	18,26	13,43	17,96	3,6	0,75
13,95 × 2,62	14,50	19,05	14,22	18,75	3,6	0,75
15,08 × 2,62	15,68	20,24	15,42	19,95	3,6	0,75
15,54 × 2,62	16,10	20,64	15,82	20,35	3,6	0,75
15,88 × 2,62	16,47	21,03	16,20	20,73	3,6	0,75
17,13 × 2,62	17,68	22,23	17,40	21,92	3,6	0,75
17,86 × 2,62	18,46	23,02	18,20	22,73	3,6	0,75
18,72 × 2,62	19,27	23,81	19,00	23,52	3,6	0,75
18,64 × 3,53	19,20	25,43	19,00	25,20	4,8	1
20,22 × 3,53	20,78	27,00	20,55	26,75	4,8	1
21,82 × 3,53	22,38	28,60	22,15	28,35	4,8	1
23,40 × 3,53	23,95	30,18	23,72	29,92	4,8	1
24,99 × 3,53	25,55	31,78	25,32	31,52	4,8	1

rgab.ru Берг АБ bergab@ya.ru Тел. (495)-228-06-21, факс (495) 2

rgab.ru Берг АБ bergab@ya.ru Тел. (495)-228-06-21, факс (495) 22

Continuation of **Table 1**

O-ring d × d_2	**Housing** in rod D_3	D_4	in cylinder bore D_3	D_4	**B**	R_1
mm						
25,80 × 3,53	26,33	32,56	26,11	32,31	4,8	1
26,58 × 3,53	27,13	33,35	26,90	33,10	4,8	1
28,17 × 3,53	28,73	34,95	28,50	34,70	4,8	1
29,75 × 3,53	30,30	36,53	30,07	36,27	4,8	1
31,34 × 3,53	31,90	38,13	31,67	37,78	4,8	1
32,93 × 3,53	33,48	39,70	33,25	39,45	4,8	1
34,52 × 3,53	35,08	41,30	34,85	41,05	4,8	1
36,10 × 3,53	36,65	42,88	36,42	42,62	4,8	1
37,69 × 3,53	38,25	44,48	38,02	44,22	4,8	1
39,69 × 3,53	40,22	46,45	40,00	46,20	4,8	1
41,28 × 3,53	41,81	48,05	41,60	47,80	4,8	1
42,86 × 3,53	43,40	49,63	43,18	49,38	4,8	1
37,47 × 5,34	38,15	47,65	38,02	47,50	7,1	1
40,65 × 5,34	41,33	50,83	41,20	50,67	7,1	1
43,82 × 5,34	44,50	54,00	44,37	53,85	7,1	1
47,00 × 5,34	47,68	57,18	47,55	57,02	7,1	1
50,16 × 5,34	50,85	60,35	50,72	60,20	7,1	1
53,34 × 5,34	54,03	63,53	53,90	63,37	7,1	1
56,52 × 5,34	57,20	66,70	57,07	66,55	7,1	1
59,69 × 5,34	60,38	69,88	60,25	69,72	7,1	1
62,87 × 5,34	63,55	73,05	63,42	72,90	7,1	1
66,04 × 5,34	66,73	76,23	66,60	76,07	7,1	1
69,22 × 5,34	69,90	79,40	69,77	79,25	7,1	1
72,39 × 5,34	73,08	82,58	72,95	82,42	7,1	1
74,63 × 5,34	75,50	85,00	75,35	84,83	7,1	1
75,57 × 5,34	76,28	85,78	76,10	85,57	7,1	1
78,74 × 5,34	79,45	88,95	79,27	88,75	7,1	1
79,77 × 5,34	81,43	90,93	81,29	90,77	7,1	1
81,92 × 5,34	82,63	92,13	82,45	91,92	7,1	1
85,09 × 5,34	85,80	95,30	85,62	95,10	7,1	1
88,27 × 5,34	88,98	98,48	88,80	98,27	7,1	1
89,69 × 5,34	90,56	100,06	90,40	99,88	7,1	1
91,44 × 5,34	92,15	101,65	91,97	101,45	7,1	1
94,62 × 5,34	95,33	104,83	95,15	104,62	7,1	1
97,79 × 5,34	98,50	108,00	98,32	107,80	7,1	1
100,00 × 5,34	100,88	110,38	100,74	110,22	7,1	1
101,00 × 5,34	101,67	111,18	101,50	110,97	7,1	1
104,14 × 5,34	104,85	114,35	104,67	114,15	7,1	1
107,32 × 5,34	108,03	117,53	107,85	117,32	7,1	1
109,50 × 5,34	110,41	119,91	110,23	119,71	7,1	1
110,50 × 5,34	111,20	120,70	111,05	120,50	7,1	1
113,67 × 5,34	114,38	123,88	114,20	123,67	7,1	1
117,50 × 5,34	118,34	127,84	118,17	127,65	7,1	1
120,70 × 5,34	121,52	131,02	121,34	130,82	7,1	1
123,80 × 5,34	124,50	134,19	124,12	133,60	7,1	1
127,00 × 5,34	127,87	137,37	127,69	137,17	7,1	1
130,20 × 5,34	131,04	140,54	130,87	140,35	7,1	1
133,40 × 5,34	134,22	143,72	134,04	143,52	7,1	1
136,50 × 5,34	137,39	146,89	137,22	146,70	7,1	1
139,70 × 5,34	140,57	150,07	140,39	149,87	7,1	1
142,90 × 5,34	143,74	153,24	143,57	153,05	7,1	1

Continued →

rgab.ru Берг АБ bergab@ya.ru Тел. (495)-228-06-21, факс (495) 22

rgab.ru Берг АБ bergab@ya.ru Тел. (495)-228-06-21, факс (495) 2

Continuation of **Table 1**

Dynamic installation, radial squeeze

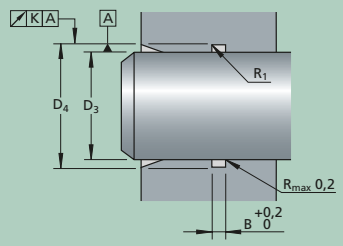

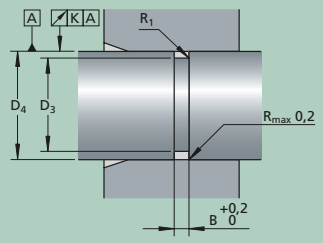

Tolerances for O-ring housing in cylinder bore

Diameter range Basic measure over	incl.	**D_4**	**D_3** Rod	Cyl. bore	**K**
mm		–			
3	**120**	H11	f8	H9	0,06
120	–	H11	f7	H8	0,1

Tolerances for O-ring housing in rod

Diameter range Basic measure over	incl.	**D_3**	**D_3** Rod	Cyl. bore	**K**
mm		–			
3	**120**	h11	f8	H9	0,06
120	–	h11	f7	H8	0,1

Installation dimensions

O-ring $d \times d_2$	**Housing** in rod D_3	D_4	in cylinder bore D_3	D_4	**B**	**R_1**
mm						
146,10 × 5,34	146,92	156,42	146,74	156,22	7,1	1
149,20 × 5,34	150,09	159,59	149,92	159,40	7,1	1
113,70 × 6,99	114,90	127,10	114,20	126,35	9,5	1,5
114,70 × 6,99	116,10	128,30	115,20	127,35	9,5	1,5
116,80 × 6,99	118,00	130,20	117,30	129,45	9,5	1,5
120,00 × 6,99	121,20	133,40	120,50	132,65	9,5	1,5
123,20 × 6,99	124,40	136,60	123,70	135,85	9,5	1,5
124,60 × 6,99	126,00	138,20	125,10	137,25	9,5	1,5
126,40 × 6,99	127,60	139,80	126,90	139,05	9,5	1,5
129,50 × 6,99	130,70	142,90	130,00	142,15	9,5	1,5
132,70 × 6,99	133,90	146,10	133,20	145,35	9,5	1,5
134,50 × 6,99	136,00	148,20	135,00	147,15	9,5	1,5
135,90 × 6,99	137,10	149,30	136,40	148,55	9,5	1,5
139,10 × 6,99	140,30	152,50	139,60	151,75	9,5	1,5
142,20 × 6,99	143,40	155,60	142,70	154,85	9,5	1,5
145,40 × 6,99	146,60	158,80	145,90	158,05	9,5	1,5
148,60 × 6,99	149,80	162,00	149,10	161,25	9,5	1,5
151,80 × 6,99	153,00	165,20	152,30	164,45	9,5	1,5
155,60 × 6,99	156,80	169,00	156,30	168,45	9,5	1,5
158,10 × 6,99	159,30	171,50	158,60	170,75	9,5	1,5
159,50 × 6,99	160,80	173,00	160,20	172,35	9,5	1,5
161,90 × 6,99	163,10	175,30	162,20	174,35	9,5	1,5
164,50 × 6,99	165,70	177,90	165,00	177,15	9,5	1,5
166,70 × 6,99	168,00	180,20	167,40	179,55	9,5	1,5
168,30 × 6,99	169,30	181,80	169,00	181,15	9,5	1,5
170,80 × 6,99	172,00	184,20	171,30	183,45	9,5	1,5
174,60 × 6,99	176,00	188,20	175,30	187,45	9,5	1,5

rgab.ru Берг АБ bergab@ya.ru Тел. (495)-228-06-21, факс (495) 2

rgab.ru Берг АБ bergab@ya.ru Тел. (495)-228-06-21, факс (495) 22

Continuation of **Table 1**

O-ring $d \times d_2$	**Housing** in rod D_3	D_4	in cylinder bore D_3	D_4	**B**	R_1
mm						
177,20 × 6,99	178,40	190,60	177,70	189,85	9,5	1,5
181,00 × 6,99	182,30	194,50	181,70	193,85	9,5	1,5
183,50 × 6,99	184,70	196,90	184,00	196,15	9,5	1,5
187,30 × 6,99	188,70	200,90	188,00	200,15	9,5	1,5
189,90 × 6,99	191,10	203,30	190,40	202,55	9,5	1,5
193,70 × 6,99	195,00	207,20	194,40	206,55	9,5	1,5
196,20 × 6,99	197,40	209,60	196,70	208,85	9,5	1,5
200,00 × 6,99	201,40	213,60	200,70	212,85	9,5	1,5
202,60 × 6,99	203,80	216,00	203,10	215,25	9,5	1,5
208,90 × 6,99	210,10	222,30	209,40	221,55	9,5	1,5
215,30 × 6,99	216,50	228,40	215,80	221,95	9,5	1,5
221,60 × 6,99	222,80	235,00	222,10	234,25	9,5	1,5
227,90 × 6,99	229,20	241,40	228,50	240,65	9,5	1,5
234,30 × 6,99	235,50	247,70	234,80	246,95	9,5	1,5
240,70 × 6,99	241,90	254,10	241,20	253,35	9,5	1,5
247,00 × 6,99	248,20	260,40	247,50	259,65	9,5	1,5
253,30 × 6,99	254,60	266,80	253,90	266,05	9,5	1,5
259,70 × 6,99	260,90	273,10	260,20	272,35	9,5	1,5
266,10 × 6,99	267,30	279,50	266,60	278,75	9,5	1,5
272,40 × 6,99	273,60	285,80	272,90	285,05	9,5	1,5
278,80 × 6,99	280,00	292,20	279,30	291,45	9,5	1,5
285,10 × 6,99	286,30	298,50	285,60	297,75	9,5	1,5
291,50 × 6,99	292,70	304,90	292,00	304,15	9,5	1,5
297,80 × 6,99	299,00	311,20	298,30	310,45	9,5	1,5
304,10 × 6,99	305,40	317,60	304,70	316,85	9,5	1,5
316,90 × 6,99	318,10	330,34	317,40	329,55	9,5	1,5
329,50 × 6,99	330,80	343,00	330,10	342,25	9,5	1,5
342,30 × 6,99	343,50	355,70	342,80	354,95	9,5	1,5
355,00 × 6,99	356,20	368,40	355,50	367,65	9,5	1,5
367,70 × 6,99	368,90	381,10	368,20	380,35	9,5	1,5
380,30 × 6,99	381,00	393,80	380,90	393,05	9,5	1,5
393,10 × 6,99	394,30	406,50	393,60	405,75	9,5	1,5

7

rgab.ru Берг АБ bergab@ya.ru Тел. (495)-228-06-21, факс (495) 22

rgab.ru Берг АБ bergab@ya.ru Тел. (495)-228-06-21, факс (495) 22

Table 2

Static installation, radial squeeze in cylinder bore

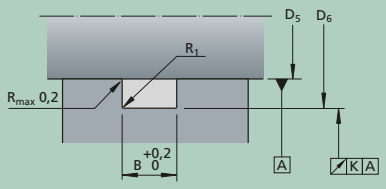

Tolerances for O-ring housing in cylinder bore

Diameter range Basic measure over	incl.	D_6	D_5 Rod	Cyl. bore	K
mm		–			
3	**120**	H11	h8	H9	0,06
120	–	H11	h7	H8	0,1

Installation dimensions

O-ring d × d_2	D_5	D_6	B	R_1
mm				
2,90 × 1,78	3,12	5,74	2,4	0,5
3,69 × 1,78	3,91	6,53	2,4	0,5
4,48 × 1,78	4,7	7,32	2,4	0,5
5,28 × 1,78	5,51	8,13	2,4	0,5
6,07 × 1,78	6,3	8,92	2,4	0,5
6,75 × 1,78	7,08	9,7	2,4	0,5
7,66 × 1,78	7,78	10,49	2,4	0,5
8,73 × 1,78	9,07	11,69	2,4	0,5
9,25 × 1,78	9,47	12,09	2,4	0,5
10,82 × 1,78	11,1	13,72	2,4	0,5
11,11 × 1,78	11,51	14,13	2,4	0,5
12,42 × 1,78	12,7	15,32	2,4	0,5
14,00 × 1,78	14,28	16,9	2,4	0,5
15,60 × 1,78	15,88	18,5	2,4	0,5
17,17 × 1,78	17,48	20,1	2,4	0,5
18,77 × 1,78	19,05	21,67	2,4	0,5
20,35 × 1,78	20,63	23,25	2,4	0,5
21,95 × 1,78	22,23	24,85	2,4	0,5
23,52 × 1,78	23,81	26,42	2,4	0,5
25,12 × 1,78	25,4	28,02	2,4	0,5
26,70 × 1,78	26,98	29,6	2,4	0,5
28,30 × 1,78	28,58	31,2	2,4	0,5
29,87 × 1,78	30,18	32,8	2,4	0,5
31,47 × 1,78	31,75	34,37	2,4	0,5
33,05 × 1,78	33,33	35,95	2,4	0,5
34,65 × 1,78	34,93	37,55	2,4	0,5
9,19 × 2,62	9,47	13,66	3,6	0,75

O-ring d × d_2	D_5	D_6	B	R_1
mm				
9,92 × 2,62	10,26	14,45	3,6	0,75
10,78 × 2,62	11,05	15,24	3,6	0,75
11,91 × 2,62	12,24	16,43	3,6	0,75
12,37 × 2,62	12,65	16,84	3,6	0,75
13,10 × 2,62	13,43	17,62	3,6	0,75
13,95 × 2,62	14,22	18,41	3,6	0,75
15,08 × 2,62	15,42	19,61	3,6	0,75
15,54 × 2,62	15,82	20,01	3,6	0,75
15,88 × 2,62	16,2	20,39	3,6	0,75
17,13 × 2,62	17,4	21,59	3,6	0,75
17,86 × 2,62	18,2	22,39	3,6	0,75
18,72 × 2,62	19	23,19	3,6	0,75
20,63 × 2,62	21,03	25,22	3,6	0,75
22,22 × 2,62	22,62	26,81	3,6	0,75
23,47 × 2,62	23,8	27,99	3,6	0,75
23,81 × 2,62	24,21	28,4	3,6	0,75
25,07 × 2,62	25,4	29,59	3,6	0,75
26,64 × 2,62	26,98	31,17	3,6	0,75
28,24 × 2,62	28,58	32,77	3,6	0,75
29,82 × 2,62	30,18	34,37	3,6	0,75
31,42 × 2,62	31,75	35,94	3,6	0,75
33,00 × 2,62	33,33	37,52	3,6	0,75
34,59 × 2,62	34,93	39,12	3,6	0,75
36,17 × 2,62	36,5	40,69	3,6	0,75
37,77 × 2,62	38,1	42,29	3,6	0,75
39,34 × 2,62	39,68	43,87	3,6	0,75
40,95 × 2,62	41,28	45,47	3,6	0,75

rgab.ru Берг АБ bergab@ya.ru Тел. (495)-228-06-21, факс (495) 22

rgab.ru Берг АБ bergab@ya.ru Тел. (495)-228-06-21, факс (495) 22

O-ring d × d_2	D_5	D_6	B	R_1
mm				
42,52 × 2,62	42,88	47,07	3,6	0,75
44,12 × 2,62	44,45	48,64	3,6	0,75
45,69 × 2,62	46,03	50,22	3,6	0,75
47,29 × 2,62	47,63	51,82	3,6	0,75
48,90 × 2,62	49,2	53,39	3,6	0,75
50,47 × 2,62	50,8	54,99	3,6	0,75
52,07 × 2,62	52,38	56,57	3,6	0,75
53,64 × 2,62	53,98	58,17	3,6	0,75
55,25 × 2,62	55,58	59,77	3,6	0,75
56,82 × 2,62	57,15	61,34	3,6	0,75
58,42 × 2,62	58,73	62,92	3,6	0,75
60,00 × 2,62	60,33	64,52	3,6	0,75
61,60 × 2,62	61,9	66,09	3,6	0,75
63,17 × 2,62	63,5	67,69	3,6	0,75
64,77 × 2,62	65,08	69,27	3,6	0,75
66,34 × 2,62	66,68	70,87	3,6	0,75
67,95 × 2,62	68,28	72,47	3,6	0,75
69,52 × 2,62	69,85	74,04	3,6	0,75
71,12 × 2,62	71,43	75,62	3,6	0,75
18,64 × 3,53	19	24,72	4,8	1
20,22 × 3,53	20,55	26,27	4,8	1
21,82 × 3,53	22,15	27,87	4,8	1
23,40 × 3,53	23,72	29,44	4,8	1
24,99 × 3,53	25,32	31,04	4,8	1
25,80 × 3,53	26,13	31,85	4,8	1
26,58 × 3,53	26,9	32,62	4,8	1
28,17 × 3,53	28,5	34,22	4,8	1
29,75 × 3,53	30,07	35,79	4,8	1
31,34 × 3,53	31,67	37,39	4,8	1
32,93 × 3,53	33,25	38,97	4,8	1
34,52 × 3,53	34,85	40,57	4,8	1
36,10 × 3,53	36,42	42,14	4,8	1
37,69 × 3,53	38,02	43,74	4,8	1
39,69 × 3,53	40,02	45,74	4,8	1
40,87 × 3,53	41,2	46,91	4,8	1
44,04 × 3,53	44,37	50,09	4,8	1
44,45 × 3,53	44,77	50,49	4,8	1
46,04 × 3,53	46,35	52,07	4,8	1
47,22 × 3,53	47,55	53,26	4,8	1
47,63 × 3,53	47,94	53,66	4,8	1
49,21 × 3,53	49,53	55,25	4,8	1
50,40 × 3,53	50,72	56,44	4,8	1
50,80 × 3,53	51,12	56,84	4,8	1
52,39 × 3,53	52,7	58,42	4,8	1
53,57 × 3,53	53,9	59,61	4,8	1
53,98 × 3,53	54,29	60,01	4,8	1
55,56 × 3,53	55,88	61,6	4,8	1
56,75 × 3,53	57,07	62,79	4,8	1
57,15 × 3,53	57,47	63,19	4,8	1
58,74 × 3,53	59,05	64,77	4,8	1
59,92 × 3,53	60,25	65,96	4,8	1

O-ring d × d_2	D_5	D_6	B	R_1
mm				
60,33 × 3,53	60,66	66,38	4,8	1
61,91 × 3,53	62,23	67,95	4,8	1
63,10 × 3,53	63,42	69,14	4,8	1
63,50 × 3,53	63,82	69,54	4,8	1
65,09 × 3,53	65,4	71,12	4,8	1
66,27 × 3,53	66,6	72,31	4,8	1
66,68 × 3,53	67	72,72	4,8	1
68,26 × 3,53	68,58	74,3	4,8	1
69,44 × 3,53	69,77	75,49	4,8	1
69,85 × 3,53	70,17	75,89	4,8	1
71,44 × 3,53	71,75	77,47	4,8	1
72,62 × 3,53	72,95	78,66	4,8	1
73,03 × 3,53	73,34	79,06	4,8	1
74,61 × 3,53	74,93	80,65	4,8	1
75,80 × 3,53	76,1	81,81	4,8	1
78,97 × 3,53	79,27	84,99	4,8	1
82,14 × 3,53	82,45	88,16	4,8	1
85,32 × 3,53	85,62	91,34	4,8	1
88,49 × 3,53	88,8	94,51	4,8	1
91,67 × 3,53	91,97	97,69	4,8	1
94,84 × 3,53	95,15	100,86	4,8	1
98,02 × 3,53	98,32	104,04	4,8	1
101,19 × 3,53	101,5	107,21	4,8	1
104,37 × 3,53	104,67	110,39	4,8	1
107,54 × 3,53	107,85	113,56	4,8	1
110,72 × 3,53	111,02	116,74	4,8	1
113,89 × 3,53	114,2	119,91	4,8	1
117,07 × 3,53	117,37	123,09	4,8	1
120,24 × 3,53	120,55	126,26	4,8	1
123,42 × 3,53	123,72	129,44	4,8	1
126,59 × 3,53	126,9	132,61	4,8	1
129,77 × 3,53	130,07	135,79	4,8	1
132,94 × 3,53	133,25	138,96	4,8	1
136,12 × 3,53	136,42	142,14	4,8	1
139,29 × 3,53	139,6	145,31	4,8	1
142,47 × 3,53	142,77	148,49	4,8	1
145,64 × 3,53	145,95	151,66	4,8	1
148,82 × 3,53	149,12	154,84	4,8	1
151,99 × 3,53	152,3	158,01	4,8	1
158,34 × 3,53	158,65	164,36	4,8	1
164,69 × 3,53	165	170,71	4,8	1
171,04 × 3,53	171,35	177,06	4,8	1
177,39 × 3,53	177,7	183,41	4,8	1
183,74 × 3,53	184,05	189,76	4,8	1
190,09 × 3,53	190,4	196,11	4,8	1
196,44 × 3,53	196,75	202,46	4,8	1
202,79 × 3,53	203,1	208,81	4,8	1
209,14 × 3,53	209,45	215,16	4,8	1
215,49 × 3,53	215,8	221,51	4,8	1
221,84 × 3,53	222,15	227,86	4,8	1
228,19 × 3,53	228,5	234,21	4,8	1

Continued →

rgab.ru Берг АБ bergab@ya.ru Тел. (495)-228-06-21, факс (495) 22

rgab.ru Берг АБ bergab@ya.ru Тел. (495)-228-06-21, факс (495) 22

Continuation of **Table 2**

Static installation, radial squeeze in cylinder bore

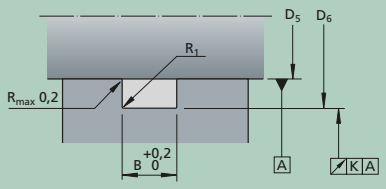

Tolerances for O-ring housing in cylinder bore

Diameter range Basic measure over	incl.	D_6	D_5 Rod	Cyl. bore	K
mm		–			
3	**120**	H11	h8	H9	0,06
120	–	H11	h7	H8	0,1

Installation dimensions

O-ring d × d_2	D_5	D_6	B	R_1
mm				
234,54 × 3,53	234,85	240,56	4,8	1
240,89 × 3,53	241,2	246,91	4,8	1
247,24 × 3,53	247,55	253,26	4,8	1
253,59 × 3,53	253,9	259,61	4,8	1
37,47 × 5,34	38,02	46,78	7,1	1
40,65 × 5,34	41,2	49,96	7,1	1
43,82 × 5,34	44,37	53,13	7,1	1
47,00 × 5,34	47,55	56,31	7,1	1
50,16 × 5,34	50,72	59,48	7,1	1
53,34 × 5,34	53,9	62,66	7,1	1
56,52 × 5,34	57,07	65,83	7,1	1
59,69 × 5,34	60,25	69,01	7,1	1
62,87 × 5,34	63,42	72,18	7,1	1
66,04 × 5,34	66,6	75,36	7,1	1
69,22 × 5,34	69,77	78,53	7,1	1
72,39 × 5,34	72,95	81,71	7,1	1
74,63 × 5,34	75,35	84,11	7,1	1
75,57 × 5,34	76,1	84,86	7,1	1
78,74 × 5,34	79,27	88,03	7,1	1
79,77 × 5,34	81,29	90,05	7,1	1
81,92 × 5,34	82,45	91,21	7,1	1
85,09 × 5,34	85,62	94,38	7,1	1
88,27 × 5,34	88,8	97,56	7,1	1
89,69 × 5,34	90,4	99,16	7,1	1
91,44 × 5,34	91,97	100,73	7,1	1
94,62 × 5,34	95,15	103,91	7,1	1
97,79 × 5,34	98,32	107,08	7,1	1

O-ring d × d_2	D_5	D_6	B	R_1
mm				
100,00 × 5,34	100,74	109,5	7,1	1
100,97 × 5,34	101,5	110,26	7,1	1
104,14 × 5,34	104,67	113,43	7,1	1
107,32 × 5,34	107,85	116,61	7,1	1
109,50 × 5,34	110,23	118,99	7,1	1
110,50 × 5,34	111,05	119,81	7,1	1
113,67 × 5,34	114,2	122,96	7,1	1
117,50 × 5,34	118,17	126,93	7,1	1
120,70 × 5,34	121,34	130,1	7,1	1
123,80 × 5,34	124,12	132,88	7,1	1
127,00 × 5,34	127,69	136,45	7,1	1
130,20 × 5,34	130,87	139,63	7,1	1
133,40 × 5,34	134,04	142,8	7,1	1
136,50 × 5,34	137,22	145,98	7,1	1
139,70 × 5,34	140,39	149,15	7,1	1
142,90 × 5,34	143,57	152,33	7,1	1
146,10 × 5,34	146,74	155,5	7,1	1
149,20 × 5,34	149,92	158,68	7,1	1
113,70 × 6,99	114,2	125,35	9,5	1,5
114,70 × 6,99	115,2	126,35	9,5	1,5
116,80 × 6,99	117,3	128,45	9,5	1,5
120,00 × 6,99	120,5	131,65	9,5	1,5
123,20 × 6,99	123,7	134,85	9,5	1,5
124,60 × 6,99	125,1	136,25	9,5	1,5
126,40 × 6,99	126,9	138,05	9,5	1,5
129,50 × 6,99	130	141,15	9,5	1,5
132,70 × 6,99	133,2	144,35	9,5	1,5

rgab.ru Берг АБ bergab@ya.ru Тел. (495)-228-06-21, факс (495) 22

rgab.ru Берг АБ bergab@ya.ru Тел. (495)-228-06-21, факс (495) 22

Continuation of **Table 2**

O-ring d × d_2	D_5	D_6	B	R_1
mm				
134,50 × 6,99	135	146,15	9,5	1,5
135,90 × 6,99	138,15	149,3	9,5	1,5
139,10 × 6,99	141,35	152,5	9,5	1,5
142,20 × 6,99	144,45	155,6	9,5	1,5
145,40 × 6,99	147,65	158,8	9,5	1,5
148,60 × 6,99	150,85	162	9,5	1,5
151,80 × 6,99	154,05	165,2	9,5	1,5
155,60 × 6,99	157,85	169	9,5	1,5
158,10 × 6,99	160,35	171,5	9,5	1,5
159,50 × 6,99	161,85	173	9,5	1,5
161,90 × 6,99	164,15	175,3	9,5	1,5
164,50 × 6,99	166,75	177,9	9,5	1,5
166,70 × 6,99	169,05	180,2	9,5	1,5
168,30 × 6,99	170,65	181,8	9,5	1,5
170,80 × 6,99	173,05	184,2	9,5	1,5
174,60 × 6,99	177,05	188,2	9,5	1,5
177,20 × 6,99	179,45	190,6	9,5	1,5
181,00 × 6,99	183,35	194,5	9,5	1,5
183,50 × 6,99	185,75	196,9	9,5	1,5
187,30 × 6,99	189,75	200,9	9,5	1,5
189,90 × 6,99	192,15	203,3	9,5	1,5
193,70 × 6,99	196,05	207,2	9,5	1,5
196,20 × 6,99	198,45	209,6	9,5	1,5
200,00 × 6,99	202,45	213,6	9,5	1,5
202,60 × 6,99	204,85	216	9,5	1,5
208,90 × 6,99	211,15	222,3	9,5	1,5
215,30 × 6,99	217,55	228,7	9,5	1,5
221,60 × 6,99	233,85	235	9,5	1,5
227,90 × 6,99	230,25	241,4	9,5	1,5
234,30 × 6,99	236,55	247,7	9,5	1,5
240,70 × 6,99	242,95	254,1	9,5	1,5
247,00 × 6,99	249,25	260,4	9,5	1,5
253,30 × 6,99	255,65	266,8	9,5	1,5
259,70 × 6,99	261,95	273,1	9,5	1,5
266,10 × 6,99	268,35	279,5	9,5	1,5
272,40 × 6,99	274,65	285,8	9,5	1,5
278,80 × 6,99	281,05	292,2	9,5	1,5
285,10 × 6,99	287,35	298,5	9,5	1,5
291,50 × 6,99	293,75	304,9	9,5	1,5
297,80 × 6,99	300,05	311,2	9,5	1,5
304,10 × 6,99	306,45	317,6	9,5	1,5
316,90 × 6,99	319,15	330,3	9,5	1,5
329,50 × 6,99	331,85	343	9,5	1,5
342,30 × 6,99	344,55	355,7	9,5	1,5
355,00 × 6,99	357,25	368,4	9,5	1,5
367,70 × 6,99	369,95	381,1	9,5	1,5
380,30 × 6,99	382,65	393,8	9,5	1,5
393,10 × 6,99	395,35	406,5	9,5	1,5

rgab.ru Берг АБ bergab@ya.ru Тел. (495)-228-06-21, факс (495) 22

rgab.ru Берг АБ bergab@ya.ru Тел. (495)-228-06-21, факс (495) 22

Table 3

Static installation, radial squeeze in rod

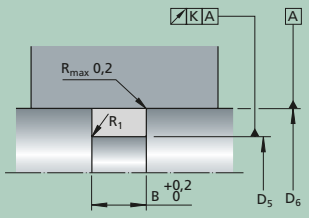

Tolerances for O-ring housing in rod

Diameter range Basic measure	D_5	D_6 Rod	Cyl. bore	K
mm	–			
(3) – 120	h11	h8	H9	0,06
(120) –	h11	h7	H8	0,1

Installation dimensions

O-ring $d \times d_2$	D_5	D_6	B	R_1
mm				
2,90 × 1,78	3,73	6,35	2,4	0,5
3,69 × 1,78	4,52	7,14	2,4	0,5
4,48 × 1,78	5,31	7,93	2,4	0,5
5,28 × 1,78	6,12	8,74	2,4	0,5
6,07 × 1,78	6,91	9,53	2,4	0,5
6,75 × 1,78	7,7	10,32	2,4	0,5
7,66 × 1,78	8,49	11,11	2,4	0,5
8,73 × 1,78	9,68	12,3	2,4	0,5
9,25 × 1,78	10,08	12,7	2,4	0,5
10,82 × 1,78	11,68	14,3	2,4	0,5
11,11 × 1,78	12,06	14,68	2,4	0,5
12,42 × 1,78	13,26	15,88	2,4	0,5
14,00 × 1,78	14,86	17,48	2,4	0,5
15,60 × 1,78	16,43	19,05	2,4	0,5
17,17 × 1,78	18,01	20,63	2,4	0,5
18,77 × 1,78	19,61	22,23	2,4	0,5
20,35 × 1,78	21,18	23,8	2,4	0,5
21,95 × 1,78	22,78	25,4	2,4	0,5
23,52 × 1,78	24,36	26,98	2,4	0,5
25,12 × 1,78	25,96	28,58	2,4	0,5
26,70 × 1,78	27,56	30,18	2,4	0,5
28,30 × 1,78	29,13	31,75	2,4	0,5
29,87 × 1,78	30,71	33,33	2,4	0,5
31,47 × 1,78	32,31	34,93	2,4	0,5
33,05 × 1,78	33,88	36,5	2,4	0,5
34,65 × 1,78	35,48	38,1	2,4	0,5

O-ring $d \times d_2$	D_5	D_6	B	R_1
mm				
9,19 × 2,62	10,1	14,29	3,6	0,75
9,92 × 2,62	10,89	15,08	3,6	0,75
10,78 × 2,62	11,69	15,88	3,6	0,75
11,91 × 2,62	12,88	17,07	3,6	0,75
12,37 × 2,62	13,27	17,46	3,6	0,75
13,10 × 2,62	14,07	18,26	3,6	0,75
13,95 × 2,62	14,86	19,05	3,6	0,75
15,08 × 2,62	16,05	20,24	3,6	0,75
15,54 × 2,62	16,45	20,64	3,6	0,75
15,88 × 2,62	16,84	21,03	3,6	0,75
17,13 × 2,62	18,04	22,23	3,6	0,75
17,86 × 2,62	18,83	23,02	3,6	0,75
18,72 × 2,62	19,62	23,81	3,6	0,75
20,63 × 2,62	21,61	25,8	3,6	0,75
22,22 × 2,62	23,19	27,38	3,6	0,75
23,47 × 2,62	24,39	28,58	3,6	0,75
23,81 × 2,62	24,78	28,97	3,6	0,75
25,07 × 2,62	25,99	30,18	3,6	0,75
26,64 × 2,62	27,56	31,75	3,6	0,75
28,24 × 2,62	29,14	33,33	3,6	0,75
29,82 × 2,62	30,74	34,93	3,6	0,75
31,42 × 2,62	32,31	36,5	3,6	0,75
33,00 × 2,62	33,91	38,1	3,6	0,75
34,59 × 2,62	35,51	39,7	3,6	0,75
36,17 × 2,62	37,09	41,28	3,6	0,75
37,77 × 2,62	38,69	42,88	3,6	0,75
39,34 × 2,62	40,26	44,45	3,6	0,75

rgab.ru Берг АБ bergab@ya.ru Тел. (495)-228-06-21, факс (495) 22

rgab.ru Берг АБ bergab@ya.ru Тел. (495)-228-06-21, факс (495) 22

O-ring d × d_2	D_5	D_6	B	R_1
mm				
40,95 × 2,62	41,84	46,03	3,6	0,75
42,52 × 2,62	43,44	47,63	3,6	0,75
44,12 × 2,62	45,01	49,2	3,6	0,75
45,69 × 2,62	46,61	50,8	3,6	0,75
47,29 × 2,62	48,19	52,38	3,6	0,75
48,90 × 2,62	49,79	53,98	3,6	0,75
50,47 × 2,62	51,39	55,58	3,6	0,75
52,07 × 2,62	52,96	57,15	3,6	0,75
53,64 × 2,62	54,54	58,73	3,6	0,75
55,25 × 2,62	56,14	60,33	3,6	0,75
56,82 × 2,62	57,71	61,9	3,6	0,75
58,42 × 2,62	59,31	63,5	3,6	0,75
60,00 × 2,62	60,91	65,1	3,6	0,75
61,60 × 2,62	62,49	66,68	3,6	0,75
63,17 × 2,62	64,09	68,28	3,6	0,75
64,77 × 2,62	65,66	69,85	3,6	0,75
66,34 × 2,62	67,24	71,43	3,6	0,75
67,95 × 2,62	68,84	73,03	3,6	0,75
69,52 × 2,62	70,41	74,6	3,6	0,75
71,12 × 2,62	72,01	76,6	3,6	0,75
18,64 × 3,53	19,71	25,43	4,8	1
20,22 × 3,53	21,28	27	4,8	1
21,82 × 3,53	22,88	28,6	4,8	1
23,40 × 3,53	24,46	30,18	4,8	1
24,99 × 3,53	26,06	31,78	4,8	1
25,80 × 3,53	26,86	32,58	4,8	1
26,58 × 3,53	27,63	33,35	4,8	1
28,17 × 3,53	29,23	34,95	4,8	1
29,75 × 3,53	30,81	36,53	4,8	1
31,34 × 3,53	32,41	38,13	4,8	1
32,93 × 3,53	33,98	39,7	4,8	1
34,52 × 3,53	35,58	41,3	4,8	1
36,10 × 3,53	37,16	42,88	4,8	1
37,69 × 3,53	38,76	44,48	4,8	1
39,69 × 3,53	40,77	46,49	4,8	1
40,87 × 3,53	41,94	47,65	4,8	1
41,28 × 3,53	42,33	48,05	4,8	1
42,86 × 3,53	43,92	49,64	4,8	1
44,04 × 3,53	45,11	50,83	4,8	1
44,45 × 3,53	45,5	51,22	4,8	1
46,04 × 3,53	47,08	52,8	4,8	1
47,22 × 3,53	48,29	54	4,8	1
47,63 × 3,53	48,67	54,39	4,8	1
49,21 × 3,53	50,26	55,98	4,8	1
50,40 × 3,53	51,46	57,18	4,8	1
50,80 × 3,53	51,85	57,57	4,8	1
52,39 × 3,53	53,45	59,17	4,8	1
53,57 × 3,53	54,64	60,35	4,8	1
53,98 × 3,53	55,02	60,74	4,8	1
55,56 × 3,53	56,62	62,34	4,8	1
56,75 × 3,53	57,81	63,92	4,8	1

O-ring d × d_2	D_5	D_6	B	R_1
mm				
58,74 × 3,53	59,78	65,5	4,8	1
59,92 × 3,53	60,99	66,7	4,8	1
60,33 × 3,53	61,37	67,09	4,8	1
61,91 × 3,53	62,96	68,68	4,8	1
63,10 × 3,53	64,16	69,88	4,8	1
63,50 × 3,53	64,55	70,27	4,8	1
65,09 × 3,53	66,13	71,85	4,8	1
66,27 × 3,53	67,34	73,05	4,8	1
68,26 × 3,53	69,3	75,02	4,8	1
69,44 × 3,53	70,51	76,23	4,8	1
69,85 × 3,53	70,9	76,62	4,8	1
71,44 × 3,53	72,48	78,2	4,8	1
72,62 × 3,53	73,69	79,4	4,8	1
73,03 × 3,53	74,04	79,79	4,8	1
74,61 × 3,53	75,66	81,38	4,8	1
75,80 × 3,53	76,86	82,58	4,8	1
78,97 × 3,53	80,06	85,78	4,8	1
82,14 × 3,53	83,23	88,95	4,8	1
85,32 × 3,53	86,41	92,13	4,8	1
88,49 × 3,53	85,89	95,3	4,8	1
91,67 × 3,53	92,76	98,48	4,8	1
37,47 × 5,34	38,89	47,65	7,1	1
40,65 × 5,34	42,07	50,83	7,1	1
43,82 × 5,34	45,24	54	7,1	1
47,00 × 5,34	48,42	57,18	7,1	1
50,16 × 5,34	51,59	60,35	7,1	1
53,34 × 5,34	54,77	63,53	7,1	1
56,52 × 5,34	57,94	66,7	7,1	1
59,69 × 5,34	61,12	69,88	7,1	1
62,87 × 5,34	64,29	73,05	7,1	1
66,04 × 5,34	67,47	76,23	7,1	1
69,22 × 5,34	70,64	79,4	7,1	1
72,39 × 5,34	73,82	82,58	7,1	1
74,63 × 5,34	76,24	85	7,1	1
75,57 × 5,34	77,02	85,78	7,1	1
78,74 × 5,34	80,19	88,95	7,1	1
79,77 × 5,34	82,17	90,93	7,1	1
81,92 × 5,34	83,37	92,13	7,1	1
85,09 × 5,34	86,54	95,3	7,1	1
88,27 × 5,34	89,72	98,48	7,1	1
89,69 × 5,34	91,3	100,06	7,1	1
91,44 × 5,34	92,89	101,65	7,1	1
94,62 × 5,34	96,07	104,83	7,1	1
97,79 × 5,34	99,24	108	7,1	1
100,00 × 5,34	101,62	110,38	7,1	1
100,97 × 5,34	102,48	111,18	7,1	1
104,14 × 5,34	105,54	114,35	7,1	1
107,32 × 5,34	108,77	117,53	7,1	1
109,50 × 5,34	111,15	119,91	7,1	1
110,50 × 5,34	111,94	120,7	7,1	1
113,67 × 5,34	115,12	123,88	7,1	1

Continued →

rgab.ru Берг АБ bergab@ya.ru Тел. (495)-228-06-21, факс (495) 22

rgab.ru Берг АБ bergab@ya.ru Тел. (495)-228-06-21, факс (495) 22

Continuation of **Table 3**

Static installation, radial squeeze in rod

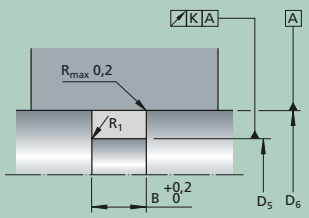

Tolerances for O-ring housing in rod

Diameter range Basic measure	**D_5**	**D_6** Rod	Cyl. bore	**K**
mm	–			
(3) – 120	h11	h8	H9	0,06
(120) –	h11	h7	H8	0,1

Installation dimensions

O-ring $d \times d_2$	D_5	D_6	B	R_1
mm				
117,50 × 5,34	119,08	127,84	7,1	1
120,70 × 5,34	122,26	131,02	7,1	1
123,80 × 5,34	125,43	134,19	7,1	1
127,00 × 5,34	128,61	137,37	7,1	1
130,20 × 5,34	131,78	140,54	7,1	1
133,40 × 5,34	134,96	143,72	7,1	1
136,50 × 5,34	138,13	146,89	7,1	1
139,70 × 5,34	141,31	150,07	7,1	1
142,90 × 5,34	144,48	153,24	7,1	1
146,10 × 5,34	147,66	156,42	7,1	1
149,20 × 5,34	150,83	159,59	7,1	1
113,70 × 6,99	115,95	127,1	9,5	1,5
114,70 × 6,99	117,15	128,3	9,5	1,5
116,80 × 6,99	119,05	130,2	9,5	1,5
120,00 × 6,99	122,25	133,4	9,5	1,5
123,20 × 6,99	125,45	136,6	9,5	1,5
124,60 × 6,99	127,05	138,2	9,5	1,5
126,40 × 6,99	128,65	139,8	9,5	1,5
129,50 × 6,99	131,75	142,9	9,5	1,5
132,70 × 6,99	134,95	146,1	9,5	1,5
134,50 × 6,99	137,05	148,2	9,5	1,5
135,90 × 6,99	138,15	149,3	9,5	1,5
139,10 × 6,99	141,35	152,5	9,5	1,5
142,20 × 6,99	144,45	155,6	9,5	1,5
145,40 × 6,99	147,65	158,8	9,5	1,5
148,60 × 6,99	150,85	162	9,5	1,5
151,80 × 6,99	154,05	165,2	9,5	1,5

O-ring $d \times d_2$	D_5	D_6	B	R_1
mm				
155,60 × 6,99	157,85	169	9,5	1,5
158,10 × 6,99	160,35	171,5	9,5	1,5
159,50 × 6,99	161,85	173	9,5	1,5
161,90 × 6,99	164,15	175,3	9,5	1,5
164,50 × 6,99	166,75	177,9	9,5	1,5
166,70 × 6,99	169,05	180,2	9,5	1,5
168,30 × 6,99	170,65	181,8	9,5	1,5
170,80 × 6,99	173,05	184,2	9,5	1,5
174,60 × 6,99	177,05	188,2	9,5	1,5
177,20 × 6,99	179,45	190,6	9,5	1,5
181,00 × 6,99	183,35	194,5	9,5	1,5
183,50 × 6,99	185,75	196,9	9,5	1,5
187,30 × 6,99	189,75	200,9	9,5	1,5
189,90 × 6,99	192,15	203,3	9,5	1,5
193,70 × 6,99	196,05	207,2	9,5	1,5
196,20 × 6,99	198,45	209,6	9,5	1,5
200,00 × 6,99	202,45	213,6	9,5	1,5
202,60 × 6,99	204,85	216	9,5	1,5
208,90 × 6,99	211,15	222,3	9,5	1,5
215,80 × 6,99	217,55	228,7	9,5	1,5
221,60 × 6,99	223,85	235	9,5	1,5
227,90 × 6,99	230,25	241,4	9,5	1,5
234,30 × 6,99	236,55	247,7	9,5	1,5
240,70 × 6,99	242,95	254,1	9,5	1,5
247,00 × 6,99	249,25	260,4	9,5	1,5
253,30 × 6,99	255,65	266,8	9,5	1,5
259,70 × 6,99	261,95	273,1	9,5	1,5

rgab.ru Берг АБ bergab@ya.ru Тел. (495)-228-06-21, факс (495) 22

rgab.ru Берг АБ bergab@ya.ru Тел. (495)-228-06-21, факс (495) 22

Continuation of **Table 3**

O-ring $d \times d_2$	D_5	D_6	B	R_1
mm				
266,10 × 6,99	268,35	279,5	9,5	1,5
272,40 × 6,99	274,65	285,8	9,5	1,5
278,80 × 6,99	281,05	292,2	9,5	1,5
285,10 × 6,99	287,35	298,5	9,5	1,5
291,50 × 6,99	293,75	304,9	9,5	1,5
297,80 × 6,99	300,05	311,2	9,5	1,5
304,10 × 6,99	306,45	317,6	9,5	1,5
316,90 × 6,99	319,15	330,3	9,5	1,5
329,50 × 6,99	331,85	343	9,5	1,5
342,30 × 6,99	344,55	355,7	9,5	1,5
355,00 × 6,99	357,25	368,4	9,5	1,5
367,70 × 6,99	369,95	381,1	9,5	1,5
380,30 × 6,99	382,65	393,8	9,5	1,5
393,10 × 6,99	395,35	406,5	9,5	1,5

rgab.ru Берг АБ bergab@ya.ru Тел. (495)-228-06-21, факс (495) 22

rgab.ru Берг АБ bergab@ya.ru Тел. (495)-228-06-21, факс (495) 2

Table 4

Static installation, axial squeeze
External and internal overpressure

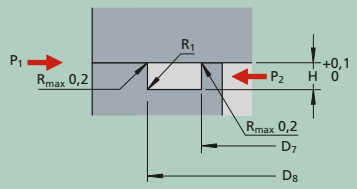

Closed O-ring housing

Internal overpressure

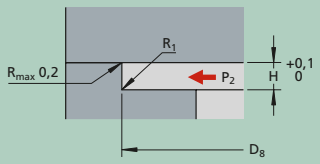

Open O-ring housing

Installation dimensions

O-ring $d \times d_2$	External overpressure D_8 min	External overpressure D_7 h11	Internal overpressure D_8 H11	Internal overpressure D_7 max	H	R_1
mm						
2,90 × 1,78	7,94	3,18	6,35	–	2,4	0,5
3,69 × 1,78	8,73	3,97	7,14	2,38	2,4	0,5
4,48 × 1,78	9,53	4,77	7,94	3,18	2,4	0,5
5,28 × 1,78	10,32	5,57	8,73	3,97	2,4	0,5
6,07 × 1,78	11,11	6,35	9,53	4,76	2,4	0,5
6,75 × 1,78	11,91	7,15	10,32	5,56	2,4	0,5
7,66 × 1,78	12,70	7,94	11,11	6,35	2,4	0,5
8,73 × 1,78	13,89	9,30	12,30	7,54	2,4	0,5
9,25 × 1,78	14,29	9,53	12,70	7,94	2,4	0,5
10,82 × 1,78	15,88	11,11	14,29	9,53	2,4	0,5
11,11 × 1,78	16,27	11,51	14,68	9,92	2,4	0,5
12,42 × 1,78	17,46	12,70	15,88	11,11	2,4	0,5
14,00 × 1,78	19,05	14,28	17,46	12,70	2,4	0,5
15,60 × 1,78	20,64	15,88	19,05	14,29	2,4	0,5
17,17 × 1,78	22,23	17,46	20,64	15,88	2,4	0,5
18,77 × 1,78	23,81	19,05	22,23	17,46	2,4	0,5
20,35 × 1,78	25,40	20,64	23,81	19,05	2,4	0,5
21,95 × 1,78	26,99	22,23	25,40	20,64	2,4	0,5
23,52 × 1,78	28,58	23,81	26,99	22,23	2,4	0,5
25,12 × 1,78	30,16	25,40	28,58	23,81	2,4	0,5
26,70 × 1,78	31,75	26,99	30,16	25,40	2,4	0,5
28,30 × 1,78	33,34	28,58	31,75	26,99	2,4	0,5
29,87 × 1,78	34,93	30,16	33,34	28,58	2,4	0,5
31,47 × 1,78	36,51	31,75	34,93	30,16	2,4	0,5
33,05 × 1,78	38,10	33,34	36,51	31,75	2,4	0,5
34,65 × 1,78	39,69	34,93	38,10	33,34	2,4	0,5
9,19 × 2,62	16,67	9,53	14,29	7,14	3,6	0,75
9,92 × 2,62	17,46	10,32	15,08	7,94	3,6	0,75
10,78 × 2,62	18,26	11,11	15,88	8,73	3,6	0,75
11,91 × 2,62	19,45	12,30	17,07	9,92	3,6	0,75
12,37 × 2,62	19,84	12,70	17,46	10,32	3,6	0,75
13,10 × 2,62	20,64	13,49	18,26	11,11	3,6	0,75
13,95 × 2,62	21,43	14,29	19,05	11,91	3,6	0,75
15,08 × 2,62	22,62	15,48	20,24	13,10	3,6	0,75
15,54 × 2,62	23,02	15,88	20,64	13,49	3,6	0,75
15,88 × 2,62	23,42	16,27	21,03	13,89	3,6	0,75

rgab.ru Берг АБ bergab@ya.ru Тел. (495)-228-06-21, факс (495) 2

rgab.ru Берг АБ bergab@ya.ru Тел. (495)-228-06-21, факс (495) 22

Continuation of **Table 4**

O-ring $d \times d_2$	External overpressure D_8 min	D_7 h11	Internal overpressure D_8 H11	D_7 max	H	R_1
mm						
17,13 × 2,62	24,61	17,46	22,23	15,08	3,6	0,75
17,86 × 2,62	25,40	18,26	23,02	15,88	3,6	0,75
18,72 × 2,62	26,19	19,05	23,18	16,67	3,6	0,75
20,24 × 2,62	27,78	20,64	25,40	18,26	3,6	0,75
20,63 × 2,62	28,18	21,03	25,80	18,65	3,6	0,75
22,22 × 2,62	29,77	22,62	27,38	20,24	3,6	0,75
23,47 × 2,62	30,96	23,81	28,63	21,43	3,6	0,75
23,81 × 2,62	31,35	24,21	28,97	21,83	3,6	0,75
25,07 × 2,62	32,54	25,40	30,16	23,02	3,6	0,75
26,64 × 2,62	34,13	26,99	31,75	24,61	3,6	0,75
28,24 × 2,62	35,72	28,58	33,34	26,19	3,6	0,75
29,82 × 2,62	37,31	30,16	34,93	27,78	3,6	0,75
31,42 × 2,62	38,89	31,75	36,51	29,37	3,6	0,75
33,00 × 2,62	40,48	33,34	38,10	30,96	3,6	0,75
34,59 × 2,62	42,07	34,93	39,69	32,54	3,6	0,75
36,17 × 2,62	43,66	36,51	41,28	34,13	3,6	0,75
37,77 × 2,62	45,24	38,10	42,86	35,72	3,6	0,75
39,34 × 2,62	46,83	39,68	44,45	37,31	3,6	0,75
40,95 × 2,62	48,42	41,28	46,04	38,89	3,6	0,75
42,52 × 2,62	50,01	42,86	47,63	40,48	3,6	0,75
44,12 × 2,62	51,59	44,45	49,21	42,07	3,6	0,75
45,69 × 2,62	53,18	46,04	50,80	43,66	3,6	0,75
47,29 × 2,62	54,77	47,63	52,39	45,24	3,6	0,75
48,90 × 2,62	56,36	49,21	53,98	46,83	3,6	0,75
50,47 × 2,62	57,94	50,80	55,56	48,52	3,6	0,75
52,07 × 2,62	59,53	52,39	57,15	50,01	3,6	0,75
53,64 × 2,62	61,12	53,98	58,74	51,59	3,6	0,75
55,25 × 2,62	62,71	55,56	60,33	53,18	3,6	0,75
56,85 × 2,62	64,29	57,15	61,91	54,77	3,6	0,75
58,42 × 2,62	65,88	58,74	63,50	56,36	3,6	0,75
60,00 × 2,62	67,47	60,33	65,09	57,94	3,6	0,75
61,60 × 2,62	69,06	61,91	66,68	59,53	3,6	0,75
63,17 × 2,62	70,64	63,50	68,26	61,12	3,6	0,75
64,77 × 2,62	72,23	65,09	69,85	62,71	3,6	0,75
66,34 × 2,62	73,82	66,68	71,44	64,29	3,6	0,75
67,95 × 2,62	75,41	68,26	73,03	65,88	3,6	0,75
69,52 × 2,62	76,99	69,85	74,61	67,47	3,6	0,75
71,12 × 2,62	78,58	71,44	76,20	69,06	3,6	0,75
18,64 × 3,53	28,58	19,05	25,40	15,88	4,8	1
20,22 × 3,53	30,16	20,64	26,99	17,46	4,8	1
21,82 × 3,53	31,75	22,23	28,58	19,05	4,8	1
23,40 × 3,53	33,34	23,81	30,17	20,64	4,8	1
24,99 × 3,53	34,93	25,40	31,75	22,23	4,8	1
25,80 × 3,53	35,72	26,19	32,54	23,01	4,8	1
26,58 × 3,53	36,51	26,99	33,34	23,81	4,8	1
28,17 × 3,53	38,10	28,58	34,93	25,40	4,8	1
29,75 × 3,53	39,69	30,16	36,51	26,99	4,8	1
31,34 × 3,53	41,28	31,75	38,10	28,58	4,8	1
32,93 × 3,53	42,86	33,34	39,69	30,16	4,8	1
34,52 × 3,53	44,45	34,93	41,28	31,75	4,8	1
36,10 × 3,53	46,04	36,51	42,86	33,34	4,8	1

Continued →

rgab.ru Берг АБ bergab@ya.ru Тел. (495)-228-06-21, факс (495) 22

rgab.ru Берг АБ bergab@ya.ru Тел. (495)-228-06-21, факс (495) 2

Continuation of **Table 4**

Static installation, axial squeeze
External and internal overpressure

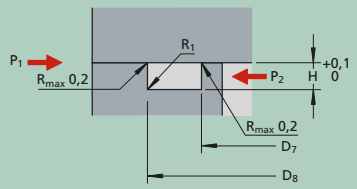

Closed O-ring housing

Internal overpressure

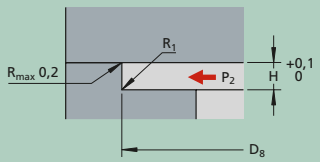

Open O-ring housing

Installation dimensions

O-ring $d \times d_2$	External overpressure D_8 min	External overpressure D_7 h11	Internal overpressure D_8 H11	Internal overpressure D_7 max	H	R_1
mm						
37,69 × 3,53	47,63	38,10	44,45	34,93	4,8	1
39,69 × 3,53	49,61	40,08	46,43	36,91	4,8	1
40,87 × 3,53	50,80	41,28	47,63	38,10	4,8	1
41,28 × 3,53	51,20	41,67	48,02	38,50	4,8	1
42,86 × 3,53	52,78	43,26	49,61	40,08	4,8	1
44,04 × 3,53	53,98	44,45	50,80	41,28	4,8	1
44,45 × 3,53	54,37	44,85	51,20	41,67	4,8	1
46,04 × 3,53	55,96	46,43	52,78	43,26	4,8	1
47,22 × 3,53	57,15	47,63	53,98	44,45	4,8	1
47,63 × 3,53	57,55	48,02	54,37	44,85	4,8	1
49,21 × 3,53	59,13	49,61	55,96	46,43	4,8	1
50,40 × 3,53	60,33	50,80	57,15	47,63	4,8	1
50,80 × 3,53	60,72	51,20	57,55	48,02	4,8	1
52,39 × 3,53	62,31	52,78	59,13	49,61	4,8	1
53,57 × 3,53	63,50	53,98	60,33	50,80	4,8	1
53,98 × 3,53	63,90	54,37	60,72	51,20	4,8	1
55,56 × 3,53	65,48	55,96	62,31	52,78	4,8	1
56,75 × 3,53	66,68	57,15	63,50	53,98	4,8	1
57,15 × 3,53	67,07	57,55	63,90	54,37	4,8	1
58,74 × 3,53	68,66	59,13	65,48	55,96	4,8	1
59,92 × 3,53	69,85	60,33	66,68	57,15	4,8	1
60,33 × 3,53	70,25	60,72	67,07	57,55	4,8	1
61,91 × 3,53	71,83	62,31	68,66	59,13	4,8	1
63,10 × 3,53	73,03	63,50	69,85	60,33	4,8	1
63,50 × 3,53	73,42	63,90	70,25	60,72	4,8	1
65,09 × 3,53	75,01	65,48	71,83	62,31	4,8	1
66,27 × 3,53	76,20	66,68	73,03	63,50	4,8	1
66,68 × 3,53	76,60	67,07	73,42	63,90	4,8	1
68,26 × 3,53	78,18	68,66	75,01	65,48	4,8	1
69,44 × 3,53	79,38	69,85	76,20	66,68	4,8	1
69,85 × 3,53	79,77	70,25	76,60	67,07	4,8	1
71,44 × 3,53	81,36	71,83	78,18	68,66	4,8	1
72,62 × 3,53	82,55	73,03	79,38	69,85	4,8	1
73,03 × 3,53	82,95	73,42	79,77	70,25	4,8	1
74,61 × 3,53	84,53	75,01	81,36	71,83	4,8	1
75,80 × 3,53	85,73	76,20	82,55	73,03	4,8	1

rgab.ru Берг АБ bergab@ya.ru Тел. (495)-228-06-21, факс (495) 2

rgab.ru Берг АБ bergab@ya.ru Тел. (495)-228-06-21, факс (495) 22

Continuation of **Table 4**

O-ring $d \times d_2$	External overpressure D_8 min	External overpressure D_7 h11	Internal overpressure D_8 H11	Internal overpressure D_7 max	H	R_1
mm						
78,97 × 3,53	88,90	79,38	85,73	76,20	4,8	1
82,14 × 3,53	92,08	82,55	88,90	79,38	4,8	1
85,32 × 3,53	95,25	85,73	92,08	82,55	4,8	1
88,49 × 3,53	98,43	88,90	95,25	85,73	4,8	1
91,67 × 3,53	101,60	92,08	98,43	88,90	4,8	1
94,84 × 3,53	104,78	95,25	101,60	92,08	4,8	1
98,02 × 3,53	107,95	98,43	104,78	95,25	4,8	1
101,19 × 3,53	111,13	101,60	107,95	98,43	4,8	1
104,37 × 3,53	114,30	104,78	111,13	101,60	4,8	1
107,54 × 3,53	117,48	107,95	114,30	104,78	4,8	1
110,72 × 3,53	120,65	111,13	117,48	107,95	4,8	1
113,89 × 3,53	123,83	114,30	120,65	111,13	4,8	1
117,07 × 3,53	127,00	117,48	123,83	114,30	4,8	1
120,24 × 3,53	130,18	120,65	127,00	117,48	4,8	1
123,42 × 3,53	133,35	123,83	130,18	120,65	4,8	1
126,59 × 3,53	136,53	127,00	133,35	123,83	4,8	1
127,77 × 3,53	139,70	130,18	136,53	127,00	4,8	1
132,94 × 3,53	142,88	133,35	139,70	130,18	4,8	1
136,12 × 3,53	146,05	136,53	142,88	133,35	4,8	1
139,29 × 3,53	149,23	139,70	146,05	135,53	4,8	1
142,40 × 3,53	152,40	142,88	149,23	139,70	4,8	1
145,64 × 3,53	155,58	146,05	152,40	142,88	4,8	1
148,82 × 3,53	158,75	149,23	155,58	146,05	4,8	1
151,99 × 3,53	161,93	152,40	158,75	149,23	4,8	1
158,34 × 3,53	168,28	158,75	165,10	155,58	4,8	1
164,69 × 3,53	174,63	165,10	171,45	161,93	4,8	1
171,04 × 3,53	180,98	171,45	177,80	168,28	4,8	1
177,39 × 3,53	187,33	177,80	184,15	174,63	4,8	1
183,74 × 3,53	193,68	184,15	190,50	180,98	4,8	1
190,09 × 3,53	200,03	190,50	196,85	187,33	4,8	1
196,44 × 3,53	206,38	196,85	203,20	193,68	4,8	1
202,79 × 3,53	212,73	203,21	209,55	200,03	4,8	1
209,14 × 3,53	219,08	209,55	215,90	206,38	4,8	1
215,49 × 3,53	225,43	215,90	222,25	212,73	4,8	1
221,84 × 3,53	231,78	222,25	228,60	219,08	4,8	1
228,19 × 3,53	238,13	228,60	234,95	225,43	4,8	1
234,54 × 3,53	244,48	234,95	241,30	231,78	4,8	1
240,89 × 3,53	250,83	241,30	247,65	238,13	4,8	1
247,24 × 3,53	257,18	247,65	254,00	244,48	4,8	1
253,39 × 3,53	263,53	254,00	260,35	250,83	4,8	1
37,47 × 5,34	52,39	38,10	47,63	33,34	7,1	1
40,65 × 5,34	55,56	41,28	50,80	36,51	7,1	1
43,82 × 5,34	58,74	44,45	53,98	39,69	7,1	1
47,00 × 5,34	61,91	47,63	57,15	42,86	7,1	1
50,16 × 5,34	65,09	50,80	60,33	46,04	7,1	1
53,34 × 5,34	68,26	53,98	63,50	49,21	7,1	1
56,52 × 5,34	71,44	57,15	66,68	52,39	7,1	1
59,69 × 5,34	74,61	60,33	69,85	55,56	7,1	1
62,87 × 5,34	77,79	63,50	73,03	58,74	7,1	1
66,04 × 5,34	80,96	66,68	76,20	61,91	7,1	1
69,22 × 5,34	84,14	69,85	79,38	65,09	7,1	1

Continued →

7

rgab.ru Берг АБ bergab@ya.ru Тел. (495)-228-06-21, факс (495) 22

rgab.ru Берг АБ bergab@ya.ru Тел. (495)-228-06-21, факс (495) 2

Continuation of **Table 4**

Static installation, axial squeeze
External and internal overpressure

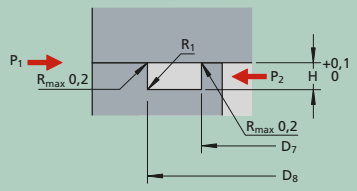

Closed O-ring housing

Internal overpressure

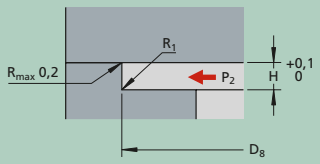

Open O-ring housing

Installation dimensions

O-ring $d \times d_2$	External overpressure D_8 min	External overpressure D_7 h11	Internal overpressure D_8 H11	Internal overpressure D_7 max	H	R_1
mm						
72,39 × 5,34	87,31	73,03	82,55	68,26	7,1	1
74,63 × 5,34	89,64	75,41	84,93	70,64	7,1	1
75,57 × 5,34	90,49	76,20	85,73	71,44	7,1	1
78,74 × 5,34	93,66	79,38	88,90	74,61	7,1	1
79,77 × 5,34	95,65	81,36	90,88	76,60	7,1	1
81,92 × 5,34	96,84	82,55	92,08	77,79	7,1	1
85,09 × 5,34	100,01	85,73	95,25	80,96	7,1	1
88,27 × 5,34	103,19	88,90	98,43	84,14	7,1	1
89,69 × 5,34	104,78	90,49	100,01	85,73	7,1	1
91,44 × 5,34	106,36	92,08	101,60	87,31	7,1	1
94,62 × 5,34	109,54	95,25	104,78	90,49	7,1	1
97,79 × 5,34	112,71	98,43	107,95	93,66	7,1	1
100,00 × 5,34	115,10	100,81	110,33	96,04	7,1	1
100,97 × 5,34	115,89	101,60	111,13	96,84	7,1	1
104,14 × 5,34	119,06	104,78	114,30	100,01	7,1	1
107,32 × 5,34	122,24	107,95	117,48	103,19	7,1	1
109,50 × 5,34	124,62	110,33	119,86	105,57	7,1	1
110,50 × 5,34	125,41	111,13	120,65	106,36	7,1	1
113,67 × 5,34	128,59	114,30	123,83	109,54	7,1	1
117,50 × 5,34	132,56	118,27	127,79	113,51	7,1	1
120,70 × 5,34	135,73	121,44	130,97	116,68	7,1	1
123,80 × 5,34	138,51	124,22	134,14	119,86	7,1	1
127,00 × 5,34	142,08	127,79	137,32	123,03	7,1	1
130,20 × 5,34	145,26	130,97	140,49	126,21	7,1	1
133,40 × 5,34	148,43	134,14	143,67	129,38	7,1	1
136,50 × 5,34	151,61	137,32	146,84	132,56	7,1	1
139,70 × 5,34	154,71	140,49	150,02	135,73	7,1	1
142,90 × 5,34	157,96	143,67	153,19	138,91	7,1	1
146,10 × 5,34	161,13	146,84	156,37	142,08	7,1	1
149,20 × 5,34	164,31	150,02	159,54	145,26	7,1	1
113,70 × 6,99	133,35	114,30	127,00	107,95	9,5	1,5
114,70 × 6,99	134,55	115,50	128,20	109,15	9,5	1,5
116,80 × 6,99	136,55	117,50	130,20	111,15	9,5	1,5
120,00 × 6,99	139,75	120,70	133,40	114,35	9,5	1,5
123,20 × 6,99	142,85	123,80	136,50	117,45	9,5	1,5
124,60 × 6,99	144,45	125,40	138,10	119,05	9,5	1,5

rgab.ru Берг АБ bergab@ya.ru Тел. (495)-228-06-21, факс (495) 2

rgab.ru Берг АБ bergab@ya.ru Тел. (495)-228-06-21, факс (495) 22

Continuation of **Table 4**

O-ring $d \times d_2$	External overpressure D_8 min	External overpressure D_7 h11	Internal overpressure D_8 H11	Internal overpressure D_7 max	H	R_1
mm						
126,40 × 6,99	146,05	127,00	139,70	120,65	9,5	1,5
129,50 × 6,99	149,25	130,20	142,90	123,85	9,5	1,5
132,70 × 6,99	152,45	133,40	146,10	127,05	9,5	1,5
134,50 × 6,99	154,35	135,30	148,00	128,95	9,5	1,5
135,90 × 6,99	155,55	136,50	149,20	130,15	9,5	1,5
139,10 × 6,99	158,75	139,70	152,40	133,35	9,5	1,5
142,20 × 6,99	161,95	142,90	155,60	136,55	9,5	1,5
145,40 × 6,99	165,15	146,10	158,80	139,75	9,5	1,5
148,60 × 6,99	168,25	149,20	161,90	142,85	9,5	1,5
151,80 × 6,99	171,45	152,40	165,10	146,05	9,5	1,5
155,60 × 6,99	175,45	156,40	169,10	150,05	9,5	1,5
158,10 × 6,99	177,85	158,80	171,50	152,45	9,5	1,5
159,50 × 6,99	179,35	160,30	173,00	153,95	9,5	1,5
161,90 × 6,99	181,35	162,30	175,40	156,35	9,5	1,5
164,50 × 6,99	184,15	165,10	177,80	158,75	9,5	1,5
166,70 × 6,99	186,55	167,50	180,20	161,15	9,5	1,5
168,30 × 6,99	188,15	169,10	181,80	162,75	9,5	1,5
170,80 × 6,99	190,55	171,50	184,20	165,15	9,5	1,5
174,60 × 6,99	194,45	175,40	188,10	169,05	9,5	1,5
177,20 × 6,99	196,85	177,80	190,50	172,45	9,5	1,5
181,00 × 6,99	200,85	181,80	194,50	175,45	9,5	1,5
183,50 × 6,99	203,25	184,20	196,90	177,85	9,5	1,5
187,30 × 6,99	207,15	188,10	200,80	181,75	9,5	1,5
189,90 × 6,99	209,55	190,50	203,20	184,15	9,5	1,5
193,70 × 6,99	213,55	194,50	207,20	188,15	9,5	1,5
196,20 × 6,99	215,95	196,90	209,60	190,55	9,5	1,5
200,00 × 6,99	219,85	200,80	213,50	194,45	9,5	1,5
202,60 × 6,99	222,25	203,20	215,90	196,85	9,5	1,5
208,90 × 6,99	228,55	209,50	222,30	203,25	9,5	1,5
215,30 × 6,99	234,95	215,90	228,60	209,55	9,5	1,5
221,60 × 6,99	241,35	222,30	235,00	215,95	9,5	1,5
227,90 × 6,99	247,65	228,60	241,30	222,25	9,5	1,5
234,30 × 6,99	254,05	235,00	247,70	228,65	9,5	1,5
240,70 × 6,99	260,35	241,20	254,00	234,95	9,5	1,5
247,00 × 6,99	266,95	247,60	260,40	241,35	9,5	1,5
253,30 × 6,99	273,05	254,00	266,70	247,65	9,5	1,5
259,70 × 6,99	279,35	260,30	273,10	254,05	9,5	1,5
266,10 × 6,99	285,75	266,70	279,40	260,35	9,5	1,5
272,40 × 6,99	292,05	273,00	285,80	266,75	9,5	1,5
278,80 × 6,99	298,45	279,40	292,10	273,05	9,5	1,5
285,10 × 6,99	304,75	285,70	298,50	279,45	9,5	1,5
291,50 × 6,99	311,15	292,10	304,80	285,75	9,5	1,5
297,80 × 6,99	317,45	298,40	311,20	292,15	9,5	1,5
304,10 × 6,99	323,85	304,80	317,50	298,45	9,5	1,5
316,90 × 6,99	336,55	317,50	330,20	311,15	9,5	1,5
329,50 × 6,99	349,25	330,20	342,90	323,85	9,5	1,5
342,30 × 6,99	361,95	342,90	355,60	336,55	9,5	1,5
355,00 × 6,99	374,65	355,60	368,30	349,25	9,5	1,5
367,70 × 6,99	387,35	368,30	381,00	361,95	9,5	1,5
380,30 × 6,99	400,05	381,00	393,70	374,65	9,5	1,5
393,10 × 6,99	412,75	393,70	405,40	387,35	9,5	1,5

rgab.ru Берг АБ bergab@ya.ru Тел. (495)-228-06-21, факс (495) 22

rgab.ru Берг АБ bergab@ya.ru Тел. (495)-228-06-21, факс (495) 2

O-rings
d_2 1 – 1,78 mm

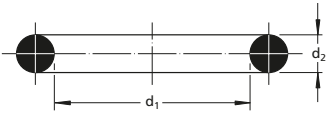

Designation	d_1		d_2	
–	mm			–
CR OR	**1.15**	×	**1**	-N70
CR OR	**1.5**	×	**1**	-N70
CR OR	**1.8**	×	**1**	-N70
CR OR	**2**	×	**1**	-N70
CR OR	**2.5**	×	**1**	-N70
CR OR	**3**	×	**1**	-N70
CR OR	**3.5**	×	**1**	-N70
CR OR	**4**	×	**1**	-N70
CR OR	**4.5**	×	**1**	-N70
CR OR	**5**	×	**1**	-N70
CR OR	**5.5**	×	**1**	-N70
CR OR	**6**	×	**1**	-N70
CR OR	**6.5**	×	**1**	-N70
CR OR	**7**	×	**1**	-N70
CR OR	**7.5**	×	**1**	-N70
CR OR	**8**	×	**1**	-N70
CR OR	**8.5**	×	**1**	-N70
CR OR	**9**	×	**1**	-N70
CR OR	**9.5**	×	**1**	-N70
CR OR	**10**	×	**1**	-N70
CR OR	**10.5**	×	**1**	-N70
CR OR	**11**	×	**1**	-N70
CR OR	**11.5**	×	**1**	-N70
CR OR	**12**	×	**1**	-N70
CR OR	**12.5**	×	**1**	-N70
CR OR	**13**	×	**1**	-N70
CR OR	**13.5**	×	**1**	-N70
CR OR	**14**	×	**1**	-N70
CR OR	**14.5**	×	**1**	-N70
CR OR	**15**	×	**1**	-N70
CR OR	**15.5**	×	**1**	-N70
CR OR	**16**	×	**1**	-N70
CR OR	**16.5**	×	**1**	-N70
CR OR	**17**	×	**1**	-N70
CR OR	**17.5**	×	**1**	-N70
CR OR	**18**	×	**1**	-N70
CR OR	**18.5**	×	**1**	-N70
CR OR	**19**	×	**1**	-N70
CR OR	**19.5**	×	**1**	-N70
CR OR	**20**	×	**1**	-N70
CR OR	**20.5**	×	**1**	-N70
CR OR	**21**	×	**1**	-N70
CR OR	**21.5**	×	**1**	-N70
CR OR	**22**	×	**1**	-N70
CR OR	**22.5**	×	**1**	-N70
CR OR	**23**	×	**1**	-N70
CR OR	**23.5**	×	**1**	-N70
CR OR	**24**	×	**1**	-N70
CR OR	**24.5**	×	**1**	-N70
CR OR	**25**	×	**1**	-N70

Designation	d_1		d_2	
–	mm			–
CR OR	**0.74**	×	**1.02**	-N70
CR OR	**1.78**	×	**1.02**	-N70
CR OR	**1.07**	×	**1.27**	-N70
CR OR	**4.7**	×	**1.42**	-N70
CR OR	**1.85**	×	**1.5**	-N70
CR OR	**2**	×	**1.5**	-N70
CR OR	**2.5**	×	**1.5**	-N70
CR OR	**2.8**	×	**1.5**	-N70
CR OR	**3**	×	**1.5**	-N70
CR OR	**3.5**	×	**1.5**	-N70
CR OR	**4**	×	**1.5**	-N70
CR OR	**4.5**	×	**1.5**	-N70
CR OR	**5**	×	**1.5**	-N70
CR OR	**5.5**	×	**1.5**	-N70
CR OR	**6**	×	**1.5**	-N70
CR OR	**6.5**	×	**1.5**	-N70
CR OR	**7**	×	**1.5**	-N70
CR OR	**7.5**	×	**1.5**	-N70
CR OR	**8**	×	**1.5**	-N70
CR OR	**8.5**	×	**1.5**	-N70
CR OR	**9**	×	**1.5**	-N70
CR OR	**9.5**	×	**1.5**	-N70
CR OR	**10**	×	**1.5**	-N70
CR OR	**10.5**	×	**1.5**	-N70
CR OR	**11**	×	**1.5**	-N70
CR OR	**11.5**	×	**1.5**	-N70
CR OR	**12**	×	**1.5**	-N70
CR OR	**12.5**	×	**1.5**	-N70
CR OR	**13**	×	**1.5**	-N70
CR OR	**13.5**	×	**1.5**	-N70
CR OR	**14**	×	**1.5**	-N70
CR OR	**14.5**	×	**1.5**	-N70
CR OR	**15**	×	**1.5**	-N70
CR OR	**15.5**	×	**1.5**	-N70
CR OR	**16**	×	**1.5**	-N70
CR OR	**16.5**	×	**1.5**	-N70
CR OR	**17**	×	**1.5**	-N70
CR OR	**17.5**	×	**1.5**	-N70
CR OR	**18**	×	**1.5**	-N70
CR OR	**18.5**	×	**1.5**	-N70
CR OR	**19**	×	**1.5**	-N70
CR OR	**19.5**	×	**1.5**	-N70
CR OR	**20**	×	**1.5**	-N70
CR OR	**20.5**	×	**1.5**	-N70
CR OR	**21**	×	**1.5**	-N70
CR OR	**21.5**	×	**1.5**	-N70
CR OR	**22**	×	**1.5**	-N70
CR OR	**22.5**	×	**1.5**	-N70
CR OR	**23**	×	**1.5**	-N70
CR OR	**23.5**	×	**1.5**	-N70

Designation	d_1		d_2	
–	mm			–
CR OR	**24**	×	**1.5**	-N70
CR OR	**24.5**	×	**1.5**	-N70
CR OR	**25**	×	**1.5**	-N70
CR OR	**25.5**	×	**1.5**	-N70
CR OR	**26**	×	**1.5**	-N70
CR OR	**26.5**	×	**1.5**	-N70
CR OR	**27**	×	**1.5**	-N70
CR OR	**27.5**	×	**1.5**	-N70
CR OR	**28**	×	**1.5**	-N70
CR OR	**28.5**	×	**1.5**	-N70
CR OR	**29**	×	**1.5**	-N70
CR OR	**29.5**	×	**1.5**	-N70
CR OR	**30**	×	**1.5**	-N70
CR OR	**30.5**	×	**1.5**	-N70
CR OR	**31**	×	**1.5**	-N70
CR OR	**31.5**	×	**1.5**	-N70
CR OR	**32**	×	**1.5**	-N70
CR OR	**32.5**	×	**1.5**	-N70
CR OR	**33**	×	**1.5**	-N70
CR OR	**33.5**	×	**1.5**	-N70
CR OR	**34**	×	**1.5**	-N70
CR OR	**34.5**	×	**1.5**	-N70
CR OR	**35**	×	**1.5**	-N70
CR OR	**35.5**	×	**1.5**	-N70
CR OR	**36**	×	**1.5**	-N70
CR OR	**36.5**	×	**1.5**	-N70
CR OR	**37**	×	**1.5**	-N70
CR OR	**37.5**	×	**1.5**	-N70
CR OR	**38**	×	**1.5**	-N70
CR OR	**38.5**	×	**1.5**	-N70
CR OR	**39**	×	**1.5**	-N70
CR OR	**39.5**	×	**1.5**	-N70
CR OR	**40**	×	**1.5**	-N70
CR OR	**41**	×	**1.5**	-N70
CR OR	**42**	×	**1.5**	-N70
CR OR	**43**	×	**1.5**	-N70
CR OR	**44**	×	**1.5**	-N70
CR OR	**45**	×	**1.5**	-N70
CR OR	**46**	×	**1.5**	-N70
CR OR	**47**	×	**1.5**	-N70
CR OR	**48**	×	**1.5**	-N70
CR OR	**49**	×	**1.5**	-N70
CR OR	**50**	×	**1.5**	-N70
CR OR	**51**	×	**1.5**	-N70
CR OR	**52**	×	**1.5**	-N70
CR OR	**53**	×	**1.5**	-N70
CR OR	**54**	×	**1.5**	-N70
CR OR	**55**	×	**1.5**	-N70
CR OR	**56**	×	**1.5**	-N70
CR OR	**57**	×	**1.5**	-N70

We normally stock O-rings of nitrile rubber (N) 70° IRH. Alternative hardnesses or materials, e.g. fluorocarbon rubber (FPM) or silicone rubber (Q) can also be delivered. Contact us for information about materials.

rgab.ru Берг АБ bergab@ya.ru Тел. (495)-228-06-21, факс (495) 2

rgab.ru Берг АБ bergab@ya.ru Тел. (495)-228-06-21, факс (495) 22

Designation																	
	d_1		d_2				d_1		d_2				d_1		d_2		
–	mm			–		–	mm			–		–	mm			–	
CR OR	58	×	1.5	-N70	CR OR	5.1	×	1.6	-N70	CR OR	25.12	×	1.78	-N70
CR OR	59	×	1.5	-N70	CR OR	6.1	×	1.6	-N70	CR OR	26.7	×	1.78	-N70
CR OR	60	×	1.5	-N70	CR OR	7.1	×	1.6	-N70	CR OR	28.3	×	1.78	-N70
CR OR	61	×	1.5	-N70	CR OR	8.1	×	1.6	-N70	CR OR	29.87	×	1.78	-N70
CR OR	62	×	1.5	-N70	CR OR	9.1	×	1.6	-N70	CR OR	31.47	×	1.78	-N70
CR OR	63	×	1.5	-N70	CR OR	10.1	×	1.6	-N70	CR OR	33.05	×	1.78	-N70
CR OR	64	×	1.5	-N70	CR OR	11.1	×	1.6	-N70	CR OR	34.65	×	1.78	-N70
CR OR	65	×	1.5	-N70	CR OR	12.1	×	1.6	-N70	CR OR	36.27	×	1.78	-N70
CR OR	66	×	1.5	-N70	CR OR	13.1	×	1.6	-N70	CR OR	37.82	×	1.78	-N70
CR OR	67	×	1.5	-N70	CR OR	14.1	×	1.6	-N70	CR OR	39.45	×	1.78	-N70
CR OR	68	×	1.5	-N70	CR OR	15.1	×	1.6	-N70	CR OR	41	×	1.78	-N70
CR OR	69	×	1.5	-N70	CR OR	16.1	×	1.6	-N70	CR OR	44.17	×	1.78	-N70
CR OR	70	×	1.5	-N70	CR OR	17.1	×	1.6	-N70	CR OR	47.35	×	1.78	-N70
CR OR	71	×	1.5	-N70	CR OR	18.1	×	1.6	-N70	CR OR	50.52	×	1.78	-N70
CR OR	72	×	1.5	-N70	CR OR	19.1	×	1.6	-N70	CR OR	53.7	×	1.78	-N70
CR OR	73	×	1.5	-N70	CR OR	22.1	×	1.6	-N70	CR OR	56.87	×	1.78	-N70
CR OR	74	×	1.5	-N70	CR OR	25.1	×	1.6	-N70	CR OR	60.04	×	1.78	-N70
CR OR	75	×	1.5	-N70	CR OR	27.1	×	1.6	-N70	CR OR	63.22	×	1.78	-N70
CR OR	76	×	1.5	-N70	CR OR	29.1	×	1.6	-N70	CR OR	66.4	×	1.78	-N70
CR OR	77	×	1.5	-N70	CR OR	32.1	×	1.6	-N70	CR OR	69.57	×	1.78	-N70
CR OR	78	×	1.5	-N70	CR OR	35.1	×	1.6	-N70	CR OR	72.75	×	1.78	-N70
CR OR	79	×	1.5	-N70	CR OR	37.1	×	1.6	-N70	CR OR	75.92	×	1.78	-N70
CR OR	80	×	1.5	-N70	CR OR	6.07	×	1.63	-N70	CR OR	79	×	1.78	-N70
CR OR	81	×	1.5	-N70	CR OR	7.65	×	1.63	-N70	CR OR	82.27	×	1.78	-N70
CR OR	82	×	1.5	-N70	CR OR	1.78	×	1.78	-N70	CR OR	85.34	×	1.78	-N70
CR OR	83	×	1.5	-N70	CR OR	2.57	×	1.78	-N70	CR OR	88.62	×	1.78	-N70
CR OR	84	×	1.5	-N70	CR OR	2.9	×	1.78	-N70	CR OR	91.7	×	1.78	-N70
CR OR	85	×	1.5	-N70	CR OR	3.17	×	1.78	-N70	CR OR	94.97	×	1.78	-N70
CR OR	86	×	1.5	-N70	CR OR	3.68	×	1.78	-N70	CR OR	98.05	×	1.78	-N70
CR OR	87	×	1.5	-N70	CR OR	4.47	×	1.78	-N70	CR OR	101.32	×	1.78	-N70
CR OR	88	×	1.5	-N70	CR OR	4.76	×	1.78	-N70	CR OR	104.4	×	1.78	-N70
CR OR	89	×	1.5	-N70	CR OR	5.28	×	1.78	-N70	CR OR	107.67	×	1.78	-N70
CR OR	90	×	1.5	-N70	CR OR	6.07	×	1.78	-N70	CR OR	110.74	×	1.78	-N70
CR OR	91	×	1.5	-N70	CR OR	6.35	×	1.78	-N70	CR OR	114.02	×	1.78	-N70
CR OR	92	×	1.5	-N70	CR OR	6.75	×	1.78	-N70	CR OR	117.1	×	1.78	-N70
CR OR	93	×	1.5	-N70	CR OR	7.65	×	1.78	-N70	CR OR	120.37	×	1.78	-N70
CR OR	94	×	1.5	-N70	CR OR	7.94	×	1.78	-N70	CR OR	123.44	×	1.78	-N70
CR OR	95	×	1.5	-N70	CR OR	8.73	×	1.78	-N70	CR OR	126.72	×	1.78	-N70
CR OR	96	×	1.5	-N70	CR OR	9.25	×	1.78	-N70	CR OR	129.4	×	1.78	-N70
CR OR	97	×	1.5	-N70	CR OR	9.52	×	1.78	-N70	CR OR	133.07	×	1.78	-N70
CR OR	98	×	1.5	-N70	CR OR	10.82	×	1.78	-N70	CR OR	135.76	×	1.78	-N70
CR OR	99	×	1.5	-N70	CR OR	11.11	×	1.78	-N70	CR OR	138.94	×	1.78	-N70
CR OR	100	×	1.5	-N70	CR OR	12.42	×	1.78	-N70	CR OR	142.11	×	1.78	-N70
CR OR	1.42	×	1.52	-N70	CR OR	14	×	1.78	-N70	CR OR	145.29	×	1.78	-N70
CR OR	2.2	×	1.6	-N70	CR OR	15.6	×	1.78	-N70	CR OR	148.46	×	1.78	-N70
CR OR	2.75	×	1.6	-N70	CR OR	17.17	×	1.78	-N70	CR OR	151.64	×	1.78	-N70
CR OR	3.1	×	1.6	-N70	CR OR	18.77	×	1.78	-N70	CR OR	154.81	×	1.78	-N70
CR OR	4.1	×	1.6	-N70	CR OR	20.35	×	1.78	-N70	CR OR	158	×	1.78	-N70
CR OR	4.7	×	1.6	-N70	CR OR	21.95	×	1.78	-N70	CR OR	161.16	×	1.78	-N70
CR OR	5	×	1.6	-N70	CR OR	23.52	×	1.78	-N70	CR OR	164.34	×	1.78	-N70

We normally stock O-rings of nitrile rubber (N) 70° IRH. Alternative hardnesses or materials, e.g. fluorocarbon rubber (FPM) or silicone rubber (Q) can also be delivered. Contact us for information about materials.

rgab.ru Берг АБ bergab@ya.ru Тел. (495)-228-06-21, факс (495) 22

rgab.ru Берг АБ bergab@ya.ru Тел. (495)-228-06-21, факс (495) 2

O-rings
d_2 1,78 – 2,5 mm

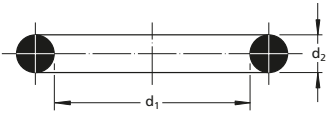

Designation	d_1		d_2	
–	mm			–
CR OR	167.51	×	1.78	-N70
CR OR	170.69	×	1.78	-N70
CR OR	173.87	×	1.78	-N70
CR OR	1.8	×	1.8	-N70
CR OR	2	×	1.8	-N70
CR OR	2.24	×	1.8	-N70
CR OR	2.5	×	1.8	-N70
CR OR	2.8	×	1.8	-N70
CR OR	3.15	×	1.8	-N70
CR OR	3.55	×	1.8	-N70
CR OR	3.75	×	1.8	-N70
CR OR	4	×	1.8	-N70
CR OR	4.5	×	1.8	-N70
CR OR	4.87	×	1.8	-N70
CR OR	5	×	1.8	-N70
CR OR	5.15	×	1.8	-N70
CR OR	5.3	×	1.8	-N70
CR OR	5.6	×	1.8	-N70
CR OR	6	×	1.8	-N70
CR OR	6.3	×	1.8	-N70
CR OR	6.7	×	1.8	-N70
CR OR	6.9	×	1.8	-N70
CR OR	7.1	×	1.8	-N70
CR OR	7.5	×	1.8	-N70
CR OR	8	×	1.8	-N70
CR OR	8.5	×	1.8	-N70
CR OR	8.76	×	1.8	-N70
CR OR	9	×	1.8	-N70
CR OR	9.5	×	1.8	-N70
CR OR	10	×	1.8	-N70
CR OR	10.6	×	1.8	-N70
CR OR	11.2	×	1.8	-N70
CR OR	11.8	×	1.8	-N70
CR OR	12.5	×	1.8	-N70
CR OR	13.2	×	1.8	-N70
CR OR	14	×	1.8	-N70
CR OR	15	×	1.8	-N70
CR OR	16	×	1.8	-N70
CR OR	17	×	1.8	-N70
CR OR	2.6	×	1.9	-N70
CR OR	3.4	×	1.9	-N70
CR OR	4.2	×	1.9	-N70
CR OR	4.9	×	1.9	-N70
CR OR	5.7	×	1.9	-N70
CR OR	6.4	×	1.9	-N70
CR OR	7.2	×	1.9	-N70
CR OR	8	×	1.9	-N70
CR OR	8.9	×	1.9	-N70
CR OR	11.89	×	1.98	-N70
CR OR	2.5	×	2	-N70

Designation	d_1		d_2	
–	mm			–
CR OR	3	×	2	-N70
CR OR	3.5	×	2	-N70
CR OR	4	×	2	-N70
CR OR	4.5	×	2	-N70
CR OR	5	×	2	-N70
CR OR	5.5	×	2	-N70
CR OR	6	×	2	-N70
CR OR	6.5	×	2	-N70
CR OR	7	×	2	-N70
CR OR	7.5	×	2	-N70
CR OR	8	×	2	-N70
CR OR	8.5	×	2	-N70
CR OR	9	×	2	-N70
CR OR	9.5	×	2	-N70
CR OR	10	×	2	-N70
CR OR	10.5	×	2	-N70
CR OR	11	×	2	-N70
CR OR	13	×	2	-N70
CR OR	13.5	×	2	-N70
CR OR	14	×	2	-N70
CR OR	14.5	×	2	-N70
CR OR	15	×	2	-N70
CR OR	15.5	×	2	-N70
CR OR	16	×	2	-N70
CR OR	16.5	×	2	-N70
CR OR	17	×	2	-N70
CR OR	17.5	×	2	-N70
CR OR	18	×	2	-N70
CR OR	18.5	×	2	-N70
CR OR	19	×	2	-N70
CR OR	19.5	×	2	-N70
CR OR	20	×	2	-N70
CR OR	20.5	×	2	-N70
CR OR	21	×	2	-N70
CR OR	21.5	×	2	-N70
CR OR	22	×	2	-N70
CR OR	22.5	×	2	-N70
CR OR	23	×	2	-N70
CR OR	23.5	×	2	-N70
CR OR	24	×	2	-N70
CR OR	24.5	×	2	-N70
CR OR	25	×	2	-N70
CR OR	25.5	×	2	-N70
CR OR	26	×	2	-N70
CR OR	26.5	×	2	-N70
CR OR	27	×	2	-N70
CR OR	27.5	×	2	-N70
CR OR	28	×	2	-N70
CR OR	28.5	×	2	-N70
CR OR	29	×	2	-N70

Designation	d_1		d_2	
–	mm			–
CR OR	29.5	×	2	-N70
CR OR	30	×	2	-N70
CR OR	30.5	×	2	-N70
CR OR	31	×	2	-N70
CR OR	31.5	×	2	-N70
CR OR	32	×	2	-N70
CR OR	32.5	×	2	-N70
CR OR	33	×	2	-N70
CR OR	33.5	×	2	-N70
CR OR	34	×	2	-N70
CR OR	34.5	×	2	-N70
CR OR	35	×	2	-N70
CR OR	35.5	×	2	-N70
CR OR	36	×	2	-N70
CR OR	36.5	×	2	-N70
CR OR	37	×	2	-N70
CR OR	37.5	×	2	-N70
CR OR	38	×	2	-N70
CR OR	38.5	×	2	-N70
CR OR	39	×	2	-N70
CR OR	39.5	×	2	-N70
CR OR	40	×	2	-N70
CR OR	41	×	2	-N70
CR OR	42	×	2	-N70
CR OR	43	×	2	-N70
CR OR	44	×	2	-N70
CR OR	45	×	2	-N70
CR OR	46	×	2	-N70
CR OR	47	×	2	-N70
CR OR	48	×	2	-N70
CR OR	49	×	2	-N70
CR OR	50	×	2	-N70
CR OR	51	×	2	-N70
CR OR	52	×	2	-N70
CR OR	53	×	2	-N70
CR OR	54	×	2	-N70
CR OR	55	×	2	-N70
CR OR	56	×	2	-N70
CR OR	57	×	2	-N70
CR OR	58	×	2	-N70
CR OR	59	×	2	-N70
CR OR	60	×	2	-N70
CR OR	61	×	2	-N70
CR OR	62	×	2	-N70
CR OR	63	×	2	-N70
CR OR	64	×	2	-N70
CR OR	65	×	2	-N70
CR OR	66	×	2	-N70
CR OR	67	×	2	-N70
CR OR	68	×	2	-N70

We normally stock O-rings of nitrile rubber (N) 70° IRH. Alternative hardnesses or materials, e.g. fluorocarbon rubber (FPM) or silicone rubber (Q) can also be delivered. Contact us for information about materials.

rgab.ru Берг АБ bergab@ya.ru Тел. (495)-228-06-21, факс (495) 2

rgab.ru Берг АБ bergab@ya.ru Тел. (495)-228-06-21, факс (495) 2

Designation	d_1		d_2	
–	mm			–
CR OR	**69**	×	**2**	-N70
CR OR	**70**	×	**2**	-N70
CR OR	**71**	×	**2**	-N70
CR OR	**72**	×	**2**	-N70
CR OR	**73**	×	**2**	-N70
CR OR	**74**	×	**2**	-N70
CR OR	**75**	×	**2**	-N70
CR OR	**76**	×	**2**	-N70
CR OR	**77**	×	**2**	-N70
CR OR	**78**	×	**2**	-N70
CR OR	**79**	×	**2**	-N70
CR OR	**80**	×	**2**	-N70
CR OR	**81**	×	**2**	-N70
CR OR	**82**	×	**2**	-N70
CR OR	**83**	×	**2**	-N70
CR OR	**84**	×	**2**	-N70
CR OR	**85**	×	**2**	-N70
CR OR	**86**	×	**2**	-N70
CR OR	**87**	×	**2**	-N70
CR OR	**88**	×	**2**	-N70
CR OR	**89**	×	**2**	-N70
CR OR	**90**	×	**2**	-N70
CR OR	**91**	×	**2**	-N70
CR OR	**92**	×	**2**	-N70
CR OR	**93**	×	**2**	-N70
CR OR	**94**	×	**2**	-N70
CR OR	**95**	×	**2**	-N70
CR OR	**96**	×	**2**	-N70
CR OR	**97**	×	**2**	-N70
CR OR	**98**	×	**2**	-N70
CR OR	**99**	×	**2**	-N70
CR OR	**100**	×	**2**	-N70
CR OR	**13.46**	×	**2.08**	-N70
CR OR	**6**	×	**2.2**	-N70
CR OR	**16.36**	×	**2.21**	-N70
CR OR	**3.3**	×	**2.4**	-N70
CR OR	**3.6**	×	**2.4**	-N70
CR OR	**4.3**	×	**2.4**	-N70
CR OR	**4.6**	×	**2.4**	-N70
CR OR	**5.3**	×	**2.4**	-N70
CR OR	**5.5**	×	**2.4**	-N70
CR OR	**5.6**	×	**2.4**	-N70
CR OR	**6.3**	×	**2.4**	-N70
CR OR	**6.6**	×	**2.4**	-N70
CR OR	**7.3**	×	**2.4**	-N70
CR OR	**7.5**	×	**2.4**	-N70
CR OR	**7.6**	×	**2.4**	-N70
CR OR	**8.3**	×	**2.4**	-N70
CR OR	**8.6**	×	**2.4**	-N70
CR OR	**9.3**	×	**2.4**	-N70

Designation	d_1		d_2	
–	mm			–
CR OR	**9.6**	×	**2.4**	-N70
CR OR	**10.3**	×	**2.4**	-N70
CR OR	**10.5**	×	**2.4**	-N70
CR OR	**10.6**	×	**2.4**	-N70
CR OR	**11.3**	×	**2.4**	-N70
CR OR	**11.5**	×	**2.4**	-N70
CR OR	**11.6**	×	**2.4**	-N70
CR OR	**12.3**	×	**2.4**	-N70
CR OR	**12.6**	×	**2.4**	-N70
CR OR	**13.3**	×	**2.4**	-N70
CR OR	**13.5**	×	**2.4**	-N70
CR OR	**13.6**	×	**2.4**	-N70
CR OR	**14.3**	×	**2.4**	-N70
CR OR	**14.5**	×	**2.4**	-N70
CR OR	**14.6**	×	**2.4**	-N70
CR OR	**15.3**	×	**2.4**	-N70
CR OR	**15.5**	×	**2.4**	-N70
CR OR	**15.6**	×	**2.4**	-N70
CR OR	**16.3**	×	**2.4**	-N70
CR OR	**16.6**	×	**2.4**	-N70
CR OR	**17.3**	×	**2.4**	-N70
CR OR	**17.5**	×	**2.4**	-N70
CR OR	**17.6**	×	**2.4**	-N70
CR OR	**18.3**	×	**2.4**	-N70
CR OR	**18.6**	×	**2.4**	-N70
CR OR	**19.3**	×	**2.4**	-N70
CR OR	**19.6**	×	**2.4**	-N70
CR OR	**20.3**	×	**2.4**	-N70
CR OR	**20.5**	×	**2.4**	-N70
CR OR	**21.5**	×	**2.4**	-N70
CR OR	**21.6**	×	**2.4**	-N70
CR OR	**22.3**	×	**2.4**	-N70
CR OR	**23.5**	×	**2.4**	-N70
CR OR	**24.5**	×	**2.4**	-N70
CR OR	**24.6**	×	**2.4**	-N70
CR OR	**25**	×	**2.4**	-N70
CR OR	**25.3**	×	**2.4**	-N70
CR OR	**27.3**	×	**2.4**	-N70
CR OR	**27.5**	×	**2.4**	-N70
CR OR	**27.6**	×	**2.4**	-N70
CR OR	**29.6**	×	**2.4**	-N70
CR OR	**31.6**	×	**2.4**	-N70
CR OR	**33.3**	×	**2.4**	-N70
CR OR	**34.6**	×	**2.4**	-N70
CR OR	**37.6**	×	**2.4**	-N70
CR OR	**39.6**	×	**2.4**	-N70
CR OR	**41.6**	×	**2.4**	-N70
CR OR	**44.6**	×	**2.4**	-N70
CR OR	**47.6**	×	**2.4**	-N70
CR OR	**49.6**	×	**2.4**	-N70

Designation	d_1		d_2	
–	mm			–
CR OR	**51.6**	×	**2.4**	-N70
CR OR	**54.6**	×	**2.4**	-N70
CR OR	**57.6**	×	**2.4**	-N70
CR OR	**59.6**	×	**2.4**	-N70
CR OR	**61.6**	×	**2.4**	-N70
CR OR	**64.6**	×	**2.4**	-N70
CR OR	**67.6**	×	**2.4**	-N70
CR OR	**69.6**	×	**2.4**	-N70
CR OR	**17.93**	×	**2.46**	-N70
CR OR	**19.18**	×	**2.46**	-N70
CR OR	**4**	×	**2.5**	-N70
CR OR	**4.6**	×	**2.5**	-N70
CR OR	**5**	×	**2.5**	-N70
CR OR	**5.5**	×	**2.5**	-N70
CR OR	**6**	×	**2.5**	-N70
CR OR	**6.5**	×	**2.5**	-N70
CR OR	**7**	×	**2.5**	-N70
CR OR	**7.5**	×	**2.5**	-N70
CR OR	**8**	×	**2.5**	-N70
CR OR	**8.5**	×	**2.5**	-N70
CR OR	**9**	×	**2.5**	-N70
CR OR	**9.5**	×	**2.5**	-N70
CR OR	**11.5**	×	**2.5**	-N70
CR OR	**12**	×	**2.5**	-N70
CR OR	**12.5**	×	**2.5**	-N70
CR OR	**13**	×	**2.5**	-N70
CR OR	**13.5**	×	**2.5**	-N70
CR OR	**14**	×	**2.5**	-N70
CR OR	**14.5**	×	**2.5**	-N70
CR OR	**15**	×	**2.5**	-N70
CR OR	**15.5**	×	**2.5**	-N70
CR OR	**16**	×	**2.5**	-N70
CR OR	**16.5**	×	**2.5**	-N70
CR OR	**17**	×	**2.5**	-N70
CR OR	**17.5**	×	**2.5**	-N70
CR OR	**18**	×	**2.5**	-N70
CR OR	**18.5**	×	**2.5**	-N70
CR OR	**19**	×	**2.5**	-N70
CR OR	**19.5**	×	**2.5**	-N70
CR OR	**20**	×	**2.5**	-N70
CR OR	**20.5**	×	**2.5**	-N70
CR OR	**21**	×	**2.5**	-N70
CR OR	**21.5**	×	**2.5**	-N70
CR OR	**22**	×	**2.5**	-N70
CR OR	**22.5**	×	**2.5**	-N70
CR OR	**23**	×	**2.5**	-N70
CR OR	**23.5**	×	**2.5**	-N70
CR OR	**24**	×	**2.5**	-N70
CR OR	**24.5**	×	**2.5**	-N70
CR OR	**25**	×	**2.5**	-N70

We normally stock O-rings of nitrile rubber (N) 70° IRH. Alternative hardnesses or materials, e.g. fluorocarbon rubber (FPM) or silicone rubber (Q) can also be delivered. Contact us for information about materials.

rgab.ru Берг АБ bergab@ya.ru Тел. (495)-228-06-21, факс (495) 2

rgab.ru Берг АБ bergab@ya.ru Тел. (495)-228-06-21, факс (495) 2

O-rings
d_2 2,5 – 5 mm

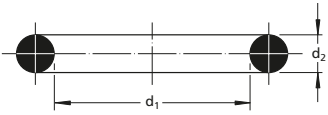

Designation											
	d_1		d_2			d_1		d_2			d_1		d_2	
–	mm			–	–	mm			–	–	mm			–
CR OR	**25.5**	×	**2.5**	-N70	CR OR	**63**	×	**2.5**	-N70	CR OR	**113**	×	**2.5**	-N70
CR OR	**26**	×	**2.5**	-N70	CR OR	**64**	×	**2.5**	-N70	CR OR	**114**	×	**2.5**	-N70
CR OR	**26.5**	×	**2.5**	-N70	CR OR	**65**	×	**2.5**	-N70	CR OR	**115**	×	**2.5**	-N70
CR OR	**27**	×	**2.5**	-N70	CR OR	**66**	×	**2.5**	-N70	CR OR	**116**	×	**2.5**	-N70
CR OR	**27.5**	×	**2.5**	-N70	CR OR	**67**	×	**2.5**	-N70	CR OR	**117**	×	**2.5**	-N70
CR OR	**28**	×	**2.5**	-N70	CR OR	**68**	×	**2.5**	-N70	CR OR	**118**	×	**2.5**	-N70
CR OR	**28.5**	×	**2.5**	-N70	CR OR	**69**	×	**2.5**	-N70	CR OR	**119**	×	**2.5**	-N70
CR OR	**29**	×	**2.5**	-N70	CR OR	**70**	×	**2.5**	-N70	CR OR	**120**	×	**2.5**	-N70
CR OR	**29.5**	×	**2.5**	-N70	CR OR	**71**	×	**2.5**	-N70	CR OR	**121**	×	**2.5**	-N70
CR OR	**30**	×	**2.5**	-N70	CR OR	**72**	×	**2.5**	-N70	CR OR	**122**	×	**2.5**	-N70
CR OR	**30.5**	×	**2.5**	-N70	CR OR	**73**	×	**2.5**	-N70	CR OR	**123**	×	**2.5**	-N70
CR OR	**31**	×	**2.5**	-N70	CR OR	**74**	×	**2.5**	-N70	CR OR	**124**	×	**2.5**	-N70
CR OR	**31.5**	×	**2.5**	-N70	CR OR	**75**	×	**2.5**	-N70	CR OR	**125**	×	**2.5**	-N70
CR OR	**32**	×	**2.5**	-N70	CR OR	**76**	×	**2.5**	-N70	CR OR	**126**	×	**2.5**	-N70
CR OR	**32.5**	×	**2.5**	-N70	CR OR	**77**	×	**2.5**	-N70	CR OR	**127**	×	**2.5**	-N70
CR OR	**33**	×	**2.5**	-N70	CR OR	**78**	×	**2.5**	-N70	CR OR	**128**	×	**2.5**	-N70
CR OR	**33.5**	×	**2.5**	-N70	CR OR	**79**	×	**2.5**	-N70	CR OR	**129**	×	**2.5**	-N70
CR OR	**34**	×	**2.5**	-N70	CR OR	**80**	×	**2.5**	-N70	CR OR	**130**	×	**2.5**	-N70
CR OR	**34.5**	×	**2.5**	-N70	CR OR	**81**	×	**2.5**	-N70	CR OR	**131**	×	**2.5**	-N70
CR OR	**35**	×	**2.5**	-N70	CR OR	**82**	×	**2.5**	-N70	CR OR	**132**	×	**2.5**	-N70
CR OR	**35.5**	×	**2.5**	-N70	CR OR	**83**	×	**2.5**	-N70	CR OR	**133**	×	**2.5**	-N70
CR OR	**36**	×	**2.5**	-N70	CR OR	**84**	×	**2.5**	-N70	CR OR	**134**	×	**2.5**	-N70
CR OR	**37.5**	×	**2.5**	-N70	CR OR	**85**	×	**2.5**	-N70	CR OR	**135**	×	**2.5**	-N70
CR OR	**38**	×	**2.5**	-N70	CR OR	**86**	×	**2.5**	-N70	CR OR	**136**	×	**2.5**	-N70
CR OR	**38.5**	×	**2.5**	-N70	CR OR	**87**	×	**2.5**	-N70	CR OR	**137**	×	**2.5**	-N70
CR OR	**39**	×	**2.5**	-N70	CR OR	**88**	×	**2.5**	-N70	CR OR	**138**	×	**2.5**	-N70
CR OR	**39.5**	×	**2.5**	-N70	CR OR	**89**	×	**2.5**	-N70	CR OR	**139**	×	**2.5**	-N70
CR OR	**40**	×	**2.5**	-N70	CR OR	**90**	×	**2.5**	-N70	CR OR	**140**	×	**2.5**	-N70
CR OR	**41**	×	**2.5**	-N70	CR OR	**91**	×	**2.5**	-N70	CR OR	**141**	×	**2.5**	-N70
CR OR	**42**	×	**2.5**	-N70	CR OR	**92**	×	**2.5**	-N70	CR OR	**142**	×	**2.5**	-N70
CR OR	**43**	×	**2.5**	-N70	CR OR	**93**	×	**2.5**	-N70	CR OR	**143**	×	**2.5**	-N70
CR OR	**44**	×	**2.5**	-N70	CR OR	**94**	×	**2.5**	-N70	CR OR	**144**	×	**2.5**	-N70
CR OR	**45**	×	**2.5**	-N70	CR OR	**95**	×	**2.5**	-N70	CR OR	**145**	×	**2.5**	-N70
CR OR	**46**	×	**2.5**	-N70	CR OR	**96**	×	**2.5**	-N70	CR OR	**146**	×	**2.5**	-N70
CR OR	**47**	×	**2.5**	-N70	CR OR	**97**	×	**2.5**	-N70	CR OR	**147**	×	**2.5**	-N70
CR OR	**48**	×	**2.5**	-N70	CR OR	**98**	×	**2.5**	-N70	CR OR	**148**	×	**2.5**	-N70
CR OR	**49**	×	**2.5**	-N70	CR OR	**99**	×	**2.5**	-N70	CR OR	**149**	×	**2.5**	-N70
CR OR	**50**	×	**2.5**	-N70	CR OR	**100**	×	**2.5**	-N70	CR OR	**150**	×	**2.5**	-N70
CR OR	**51**	×	**2.5**	-N70	CR OR	**101**	×	**2.5**	-N70	CR OR	**29.1**	×	**2.55**	-N70
CR OR	**52**	×	**2.5**	-N70	CR OR	**102**	×	**2.5**	-N70	CR OR	**1.24**	×	**2.62**	-N70
CR OR	**53**	×	**2.5**	-N70	CR OR	**103**	×	**2.5**	-N70	CR OR	**2.06**	×	**2.62**	-N70
CR OR	**54**	×	**2.5**	-N70	CR OR	**104**	×	**2.5**	-N70	CR OR	**2.84**	×	**2.62**	-N70
CR OR	**55**	×	**2.5**	-N70	CR OR	**105**	×	**2.5**	-N70	CR OR	**3.63**	×	**2.62**	-N70
CR OR	**56**	×	**2.5**	-N70	CR OR	**106**	×	**2.5**	-N70	CR OR	**4.42**	×	**2.62**	-N70
CR OR	**57**	×	**2.5**	-N70	CR OR	**107**	×	**2.5**	-N70	CR OR	**5.23**	×	**2.62**	-N70
CR OR	**58**	×	**2.5**	-N70	CR OR	**108**	×	**2.5**	-N70	CR OR	**6.02**	×	**2.62**	-N70
CR OR	**59**	×	**2.5**	-N70	CR OR	**109**	×	**2.5**	-N70	CR OR	**7.59**	×	**2.62**	-N70
CR OR	**60**	×	**2.5**	-N70	CR OR	**110**	×	**2.5**	-N70	CR OR	**9.13**	×	**2.62**	-N70
CR OR	**61**	×	**2.5**	-N70	CR OR	**111**	×	**2.5**	-N70	CR OR	**9.19**	×	**2.62**	-N70
CR OR	**62**	×	**2.5**	-N70	CR OR	**112**	×	**2.5**	-N70	CR OR	**9.9**	×	**2.62**	-N70

We normally stock O-rings of nitrile rubber (N) 70° IRH. Alternative hardnesses or materials, e.g. fluorocarbon rubber (FPM) or silicone rubber (Q) can also be delivered. Contact us for information about materials.

rgab.ru Берг АБ bergab@ya.ru Тел. (495)-228-06-21, факс (495) 2

rgab.ru Берг АБ bergab@ya.ru Тел. (495)-228-06-21, факс (495) 2

Designation	d_1		d_2	
–	mm			–
CR OR	**10.77**	×	**2.62**	-N70
CR OR	**11.91**	×	**2.62**	-N70
CR OR	**12.37**	×	**2.62**	-N70
CR OR	**12.7**	×	**2.62**	-N70
CR OR	**13.1**	×	**2.62**	-N70
CR OR	**13.94**	×	**2.62**	-N70
CR OR	**15.08**	×	**2.62**	-N70
CR OR	**15.54**	×	**2.62**	-N70
CR OR	**15.88**	×	**2.62**	-N70
CR OR	**17.12**	×	**2.62**	-N70
CR OR	**17.46**	×	**2.62**	-N70
CR OR	**17.86**	×	**2.62**	-N70
CR OR	**18.72**	×	**2.62**	-N70
CR OR	**20.3**	×	**2.62**	-N70
CR OR	**20.64**	×	**2.62**	-N70
CR OR	**21.89**	×	**2.62**	-N70
CR OR	**22.23**	×	**2.62**	-N70
CR OR	**23.47**	×	**2.62**	-N70
CR OR	**23.81**	×	**2.62**	-N70
CR OR	**25.07**	×	**2.62**	-N70
CR OR	**26.64**	×	**2.62**	-N70
CR OR	**28.24**	×	**2.62**	-N70
CR OR	**29.82**	×	**2.62**	-N70
CR OR	**31.42**	×	**2.62**	-N70
CR OR	**32.99**	×	**2.62**	-N70
CR OR	**34.59**	×	**2.62**	-N70
CR OR	**36.17**	×	**2.62**	-N70
CR OR	**37.77**	×	**2.62**	-N70
CR OR	**39.34**	×	**2.62**	-N70
CR OR	**40.94**	×	**2.62**	-N70
CR OR	**42.52**	×	**2.62**	-N70
CR OR	**44.12**	×	**2.62**	-N70
CR OR	**45.69**	×	**2.62**	-N70
CR OR	**47.29**	×	**2.62**	-N70
CR OR	**48.9**	×	**2.62**	-N70
CR OR	**50.47**	×	**2.62**	-N70
CR OR	**52.07**	×	**2.62**	-N70
CR OR	**53.64**	×	**2.62**	-N70
CR OR	**55.25**	×	**2.62**	-N70
CR OR	**56.82**	×	**2.62**	-N70
CR OR	**58.42**	×	**2.62**	-N70
CR OR	**59.99**	×	**2.62**	-N70
CR OR	**61.6**	×	**2.62**	-N70
CR OR	**63.17**	×	**2.62**	-N70
CR OR	**64.77**	×	**2.62**	-N70
CR OR	**66.34**	×	**2.62**	-N70
CR OR	**67.95**	×	**2.62**	-N70
CR OR	**69.52**	×	**2.62**	-N70
CR OR	**71.12**	×	**2.62**	-N70
CR OR	**72.69**	×	**2.62**	-N70

Designation	d_1		d_2	
–	mm			–
CR OR	**74.3**	×	**2.62**	-N70
CR OR	**75.87**	×	**2.62**	-N70
CR OR	**77.5**	×	**2.62**	-N70
CR OR	**80.6**	×	**2.62**	-N70
CR OR	**82.22**	×	**2.62**	-N70
CR OR	**83.8**	×	**2.62**	-N70
CR OR	**88.57**	×	**2.62**	-N70
CR OR	**94.92**	×	**2.62**	-N70
CR OR	**101.27**	×	**2.62**	-N70
CR OR	**107.62**	×	**2.62**	-N70
CR OR	**113.97**	×	**2.62**	-N70
CR OR	**120.32**	×	**2.62**	-N70
CR OR	**126.67**	×	**2.62**	-N70
CR OR	**133.02**	×	**2.62**	-N70
CR OR	**139.37**	×	**2.62**	-N70
CR OR	**145.72**	×	**2.62**	-N70
CR OR	**152.07**	×	**2.62**	-N70
CR OR	**158.42**	×	**2.62**	-N70
CR OR	**164.77**	×	**2.62**	-N70
CR OR	**171.12**	×	**2.62**	-N70
CR OR	**177.47**	×	**2.62**	-N70
CR OR	**183.82**	×	**2.62**	-N70
CR OR	**190.17**	×	**2.62**	-N70
CR OR	**196.52**	×	**2.62**	-N70
CR OR	**202.87**	×	**2.62**	-N70
CR OR	**209.22**	×	**2.62**	-N70
CR OR	**215.57**	×	**2.62**	-N70
CR OR	**221.92**	×	**2.62**	-N70
CR OR	**228.27**	×	**2.62**	-N70
CR OR	**234.62**	×	**2.62**	-N70
CR OR	**240.97**	×	**2.62**	-N70
CR OR	**247.32**	×	**2.62**	-N70
CR OR	**14**	×	**2.65**	-N70
CR OR	**15**	×	**2.65**	-N70
CR OR	**16**	×	**2.65**	-N70
CR OR	**17**	×	**2.65**	-N70
CR OR	**18**	×	**2.65**	-N70
CR OR	**19**	×	**2.65**	-N70
CR OR	**20**	×	**2.65**	-N70
CR OR	**21.2**	×	**2.65**	-N70
CR OR	**22.4**	×	**2.65**	-N70
CR OR	**23.6**	×	**2.65**	-N70
CR OR	**25**	×	**2.65**	-N70
CR OR	**25.8**	×	**2.65**	-N70
CR OR	**26.5**	×	**2.65**	-N70
CR OR	**28**	×	**2.65**	-N70
CR OR	**30**	×	**2.65**	-N70
CR OR	**31.5**	×	**2.65**	-N70
CR OR	**32.5**	×	**2.65**	-N70
CR OR	**33.5**	×	**2.65**	-N70

Designation	d_1		d_2	
–	mm			–
CR OR	**34.5**	×	**2.65**	-N70
CR OR	**35.5**	×	**2.65**	-N70
CR OR	**36.5**	×	**2.65**	-N70
CR OR	**37.5**	×	**2.65**	-N70
CR OR	**38.7**	×	**2.65**	-N70
CR OR	**8.9**	×	**2.7**	-N70
CR OR	**10.5**	×	**2.7**	-N70
CR OR	**12.1**	×	**2.7**	-N70
CR OR	**13.6**	×	**2.7**	-N70
CR OR	**15.1**	×	**2.7**	-N70
CR OR	**16.9**	×	**2.7**	-N70
CR OR	**18.4**	×	**2.7**	-N70
CR OR	**27.3**	×	**2.7**	-N70
CR OR	**21.92**	×	**2.95**	-N70
CR OR	**23.47**	×	**2.95**	-N70
CR OR	**25.04**	×	**2.95**	-N70
CR OR	**26.59**	×	**2.95**	-N70
CR OR	**29.74**	×	**2.95**	-N70
CR OR	**34.42**	×	**2.95**	-N70
CR OR	**3**	×	**3**	-N70
CR OR	**3.5**	×	**3**	-N70
CR OR	**4**	×	**3**	-N70
CR OR	**4.5**	×	**3**	-N70
CR OR	**5**	×	**3**	-N70
CR OR	**5.5**	×	**3**	-N70
CR OR	**6**	×	**3**	-N70
CR OR	**6.5**	×	**3**	-N70
CR OR	**7**	×	**3**	-N70
CR OR	**7.5**	×	**3**	-N70
CR OR	**8**	×	**3**	-N70
CR OR	**8.5**	×	**3**	-N70
CR OR	**9**	×	**3**	-N70
CR OR	**9.5**	×	**3**	-N70
CR OR	**10**	×	**3**	-N70
CR OR	**10.5**	×	**3**	-N70
CR OR	**11**	×	**3**	-N70
CR OR	**11.5**	×	**3**	-N70
CR OR	**12**	×	**3**	-N70
CR OR	**12.5**	×	**3**	-N70
CR OR	**13**	×	**3**	-N70
CR OR	**13.5**	×	**3**	-N70
CR OR	**14**	×	**3**	-N70
CR OR	**14.5**	×	**3**	-N70
CR OR	**15**	×	**3**	-N70
CR OR	**15.5**	×	**3**	-N70
CR OR	**16**	×	**3**	-N70
CR OR	**16.5**	×	**3**	-N70
CR OR	**17**	×	**3**	-N70
CR OR	**17.5**	×	**3**	-N70
CR OR	**18**	×	**3**	-N70

We normally stock O-rings of nitrile rubber (N) 70° IRH. Alternative hardnesses or materials, e.g. fluorocarbon rubber (FPM) or silicone rubber (Q) can also be delivered. Contact us for information about materials.

rgab.ru Берг АБ bergab@ya.ru Тел. (495)-228-06-21, факс (495) 2

rgab.ru Берг АБ bergab@ya.ru Тел. (495)-228-06-21, факс (495) 2

O-rings
d_2 3 mm

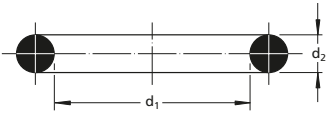

Designation	d_1		d_2	
–	mm			–
CR OR	**18.3**	×	**3**	-N70
CR OR	**18.5**	×	**3**	-N70
CR OR	**19**	×	**3**	-N70
CR OR	**19.2**	×	**3**	-N70
CR OR	**19.5**	×	**3**	-N70
CR OR	**20**	×	**3**	-N70
CR OR	**20.2**	×	**3**	-N70
CR OR	**20.5**	×	**3**	-N70
CR OR	**21**	×	**3**	-N70
CR OR	**21.2**	×	**3**	-N70
CR OR	**21.5**	×	**3**	-N70
CR OR	**22**	×	**3**	-N70
CR OR	**22.2**	×	**3**	-N70
CR OR	**22.5**	×	**3**	-N70
CR OR	**23**	×	**3**	-N70
CR OR	**23.5**	×	**3**	-N70
CR OR	**24**	×	**3**	-N70
CR OR	**24.2**	×	**3**	-N70
CR OR	**24.5**	×	**3**	-N70
CR OR	**24.6**	×	**3**	-N70
CR OR	**25**	×	**3**	-N70
CR OR	**25.5**	×	**3**	-N70
CR OR	**26**	×	**3**	-N70
CR OR	**26.2**	×	**3**	-N70
CR OR	**26.5**	×	**3**	-N70
CR OR	**27**	×	**3**	-N70
CR OR	**27.2**	×	**3**	-N70
CR OR	**27.5**	×	**3**	-N70
CR OR	**28**	×	**3**	-N70
CR OR	**28.5**	×	**3**	-N70
CR OR	**29**	×	**3**	-N70
CR OR	**29.2**	×	**3**	-N70
CR OR	**29.5**	×	**3**	-N70
CR OR	**30**	×	**3**	-N70
CR OR	**30.2**	×	**3**	-N70
CR OR	**30.5**	×	**3**	-N70
CR OR	**31**	×	**3**	-N70
CR OR	**31.5**	×	**3**	-N70
CR OR	**32**	×	**3**	-N70
CR OR	**32.2**	×	**3**	-N70
CR OR	**32.5**	×	**3**	-N70
CR OR	**33**	×	**3**	-N70
CR OR	**33.5**	×	**3**	-N70
CR OR	**34**	×	**3**	-N70
CR OR	**34.2**	×	**3**	-N70
CR OR	**34.5**	×	**3**	-N70
CR OR	**35**	×	**3**	-N70
CR OR	**35.5**	×	**3**	-N70
CR OR	**36**	×	**3**	-N70
CR OR	**36.2**	×	**3**	-N70

Designation	d_1		d_2	
–	mm			–
CR OR	**36.5**	×	**3**	-N70
CR OR	**37**	×	**3**	-N70
CR OR	**37.47**	×	**3**	-N70
CR OR	**37.5**	×	**3**	-N70
CR OR	**38**	×	**3**	-N70
CR OR	**38.5**	×	**3**	-N70
CR OR	**39**	×	**3**	-N70
CR OR	**39.2**	×	**3**	-N70
CR OR	**39.5**	×	**3**	-N70
CR OR	**40**	×	**3**	-N70
CR OR	**41**	×	**3**	-N70
CR OR	**41.5**	×	**3**	-N70
CR OR	**42**	×	**3**	-N70
CR OR	**42.2**	×	**3**	-N70
CR OR	**42.5**	×	**3**	-N70
CR OR	**43**	×	**3**	-N70
CR OR	**43.69**	×	**3**	-N70
CR OR	**44**	×	**3**	-N70
CR OR	**44.2**	×	**3**	-N70
CR OR	**44.5**	×	**3**	-N70
CR OR	**45**	×	**3**	-N70
CR OR	**46**	×	**3**	-N70
CR OR	**47**	×	**3**	-N70
CR OR	**48**	×	**3**	-N70
CR OR	**49**	×	**3**	-N70
CR OR	**49.5**	×	**3**	-N70
CR OR	**50**	×	**3**	-N70
CR OR	**50.5**	×	**3**	-N70
CR OR	**51**	×	**3**	-N70
CR OR	**52**	×	**3**	-N70
CR OR	**52.5**	×	**3**	-N70
CR OR	**53**	×	**3**	-N70
CR OR	**53.09**	×	**3**	-N70
CR OR	**54**	×	**3**	-N70
CR OR	**54.5**	×	**3**	-N70
CR OR	**55**	×	**3**	-N70
CR OR	**56**	×	**3**	-N70
CR OR	**57**	×	**3**	-N70
CR OR	**58**	×	**3**	-N70
CR OR	**58.5**	×	**3**	-N70
CR OR	**59**	×	**3**	-N70
CR OR	**59.36**	×	**3**	-N70
CR OR	**59.5**	×	**3**	-N70
CR OR	**60**	×	**3**	-N70
CR OR	**61**	×	**3**	-N70
CR OR	**62**	×	**3**	-N70
CR OR	**62.5**	×	**3**	-N70
CR OR	**63**	×	**3**	-N70
CR OR	**64**	×	**3**	-N70
CR OR	**64.5**	×	**3**	-N70

Designation	d_1		d_2	
–	mm			–
CR OR	**65**	×	**3**	-N70
CR OR	**66**	×	**3**	-N70
CR OR	**67**	×	**3**	-N70
CR OR	**67.5**	×	**3**	-N70
CR OR	**68**	×	**3**	-N70
CR OR	**69**	×	**3**	-N70
CR OR	**69.5**	×	**3**	-N70
CR OR	**70**	×	**3**	-N70
CR OR	**71**	×	**3**	-N70
CR OR	**72**	×	**3**	-N70
CR OR	**73**	×	**3**	-N70
CR OR	**74**	×	**3**	-N70
CR OR	**74.5**	×	**3**	-N70
CR OR	**75**	×	**3**	-N70
CR OR	**76**	×	**3**	-N70
CR OR	**77**	×	**3**	-N70
CR OR	**78**	×	**3**	-N70
CR OR	**79**	×	**3**	-N70
CR OR	**79.5**	×	**3**	-N70
CR OR	**80**	×	**3**	-N70
CR OR	**81**	×	**3**	-N70
CR OR	**82**	×	**3**	-N70
CR OR	**83**	×	**3**	-N70
CR OR	**84**	×	**3**	-N70
CR OR	**84.5**	×	**3**	-N70
CR OR	**85**	×	**3**	-N70
CR OR	**86**	×	**3**	-N70
CR OR	**87**	×	**3**	-N70
CR OR	**88**	×	**3**	-N70
CR OR	**89**	×	**3**	-N70
CR OR	**89.5**	×	**3**	-N70
CR OR	**90**	×	**3**	-N70
CR OR	**91**	×	**3**	-N70
CR OR	**92**	×	**3**	-N70
CR OR	**93**	×	**3**	-N70
CR OR	**94**	×	**3**	-N70
CR OR	**94.5**	×	**3**	-N70
CR OR	**95**	×	**3**	-N70
CR OR	**96**	×	**3**	-N70
CR OR	**97**	×	**3**	-N70
CR OR	**98**	×	**3**	-N70
CR OR	**99**	×	**3**	-N70
CR OR	**99.5**	×	**3**	-N70
CR OR	**100**	×	**3**	-N70
CR OR	**101**	×	**3**	-N70
CR OR	**102**	×	**3**	-N70
CR OR	**103**	×	**3**	-N70
CR OR	**104**	×	**3**	-N70
CR OR	**104.5**	×	**3**	-N70
CR OR	**105**	×	**3**	-N70

We normally stock O-rings of nitrile rubber (N) 70° IRH. Alternative hardnesses or materials, e.g. fluorocarbon rubber (FPM) or silicone rubber (Q) can also be delivered. Contact us for information about materials.

rgab.ru Берг АБ bergab@ya.ru Тел. (495)-228-06-21, факс (495) 2

rgab.ru Берг АБ bergab@ya.ru Тел. (495)-228-06-21, факс (495) 2

Designation			
	d_1		d_2
–	mm		–
CR OR **106**	× **3**	-N70	
CR OR **106.5**	× **3**	-N70	
CR OR **107**	× **3**	-N70	
CR OR **108**	× **3**	-N70	
CR OR **109**	× **3**	-N70	
CR OR **109.5**	× **3**	-N70	
CR OR **110**	× **3**	-N70	
CR OR **111**	× **3**	-N70	
CR OR **112**	× **3**	-N70	
CR OR **113**	× **3**	-N70	
CR OR **114**	× **3**	-N70	
CR OR **114.5**	× **3**	-N70	
CR OR **115**	× **3**	-N70	
CR OR **116**	× **3**	-N70	
CR OR **117**	× **3**	-N70	
CR OR **118**	× **3**	-N70	
CR OR **119**	× **3**	-N70	
CR OR **119.5**	× **3**	-N70	
CR OR **120**	× **3**	-N70	
CR OR **121**	× **3**	-N70	
CR OR **122**	× **3**	-N70	
CR OR **123**	× **3**	-N70	
CR OR **124**	× **3**	-N70	
CR OR **124.5**	× **3**	-N70	
CR OR **125**	× **3**	-N70	
CR OR **126**	× **3**	-N70	
CR OR **126.5**	× **3**	-N70	
CR OR **127**	× **3**	-N70	
CR OR **128**	× **3**	-N70	
CR OR **129**	× **3**	-N70	
CR OR **129.5**	× **3**	-N70	
CR OR **130**	× **3**	-N70	
CR OR **131**	× **3**	-N70	
CR OR **132**	× **3**	-N70	
CR OR **133**	× **3**	-N70	
CR OR **134**	× **3**	-N70	
CR OR **134.5**	× **3**	-N70	
CR OR **135**	× **3**	-N70	
CR OR **136**	× **3**	-N70	
CR OR **137**	× **3**	-N70	
CR OR **138**	× **3**	-N70	
CR OR **139**	× **3**	-N70	
CR OR **139.5**	× **3**	-N70	
CR OR **140**	× **3**	-N70	
CR OR **141**	× **3**	-N70	
CR OR **142**	× **3**	-N70	
CR OR **143**	× **3**	-N70	
CR OR **144**	× **3**	-N70	
CR OR **144.5**	× **3**	-N70	
CR OR **145**	× **3**	-N70	

Designation			
	d_1		d_2
–	mm		–
CR OR **146**	× **3**	-N70	
CR OR **147**	× **3**	-N70	
CR OR **148**	× **3**	-N70	
CR OR **149**	× **3**	-N70	
CR OR **149.5**	× **3**	-N70	
CR OR **150**	× **3**	-N70	
CR OR **151**	× **3**	-N70	
CR OR **152**	× **3**	-N70	
CR OR **153**	× **3**	-N70	
CR OR **154**	× **3**	-N70	
CR OR **154.5**	× **3**	-N70	
CR OR **155**	× **3**	-N70	
CR OR **156**	× **3**	-N70	
CR OR **157**	× **3**	-N70	
CR OR **158**	× **3**	-N70	
CR OR **159**	× **3**	-N70	
CR OR **159.5**	× **3**	-N70	
CR OR **160**	× **3**	-N70	
CR OR **161**	× **3**	-N70	
CR OR **162**	× **3**	-N70	
CR OR **163**	× **3**	-N70	
CR OR **164**	× **3**	-N70	
CR OR **164.5**	× **3**	-N70	
CR OR **165**	× **3**	-N70	
CR OR **166**	× **3**	-N70	
CR OR **167**	× **3**	-N70	
CR OR **168**	× **3**	-N70	
CR OR **169**	× **3**	-N70	
CR OR **169.5**	× **3**	-N70	
CR OR **170**	× **3**	-N70	
CR OR **171**	× **3**	-N70	
CR OR **172**	× **3**	-N70	
CR OR **173**	× **3**	-N70	
CR OR **174**	× **3**	-N70	
CR OR **174.5**	× **3**	-N70	
CR OR **175**	× **3**	-N70	
CR OR **176**	× **3**	-N70	
CR OR **177**	× **3**	-N70	
CR OR **178**	× **3**	-N70	
CR OR **179**	× **3**	-N70	
CR OR **179.5**	× **3**	-N70	
CR OR **180**	× **3**	-N70	
CR OR **181**	× **3**	-N70	
CR OR **182**	× **3**	-N70	
CR OR **183**	× **3**	-N70	
CR OR **184**	× **3**	-N70	
CR OR **184.5**	× **3**	-N70	
CR OR **185**	× **3**	-N70	
CR OR **186**	× **3**	-N70	
CR OR **187**	× **3**	-N70	

Designation			
	d_1		d_2
–	mm		–
CR OR **188**	× **3**	-N70	
CR OR **189**	× **3**	-N70	
CR OR **189.5**	× **3**	-N70	
CR OR **190**	× **3**	-N70	
CR OR **191**	× **3**	-N70	
CR OR **192**	× **3**	-N70	
CR OR **193**	× **3**	-N70	
CR OR **194**	× **3**	-N70	
CR OR **194.5**	× **3**	-N70	
CR OR **195**	× **3**	-N70	
CR OR **196**	× **3**	-N70	
CR OR **197**	× **3**	-N70	
CR OR **198**	× **3**	-N70	
CR OR **199**	× **3**	-N70	
CR OR **199.5**	× **3**	-N70	
CR OR **200**	× **3**	-N70	
CR OR **201**	× **3**	-N70	
CR OR **202**	× **3**	-N70	
CR OR **203**	× **3**	-N70	
CR OR **204**	× **3**	-N70	
CR OR **204.5**	× **3**	-N70	
CR OR **205**	× **3**	-N70	
CR OR **206**	× **3**	-N70	
CR OR **207**	× **3**	-N70	
CR OR **208**	× **3**	-N70	
CR OR **209**	× **3**	-N70	
CR OR **209.5**	× **3**	-N70	
CR OR **210**	× **3**	-N70	
CR OR **211**	× **3**	-N70	
CR OR **212**	× **3**	-N70	
CR OR **213**	× **3**	-N70	
CR OR **214**	× **3**	-N70	
CR OR **215**	× **3**	-N70	
CR OR **216**	× **3**	-N70	
CR OR **217**	× **3**	-N70	
CR OR **218**	× **3**	-N70	
CR OR **219**	× **3**	-N70	
CR OR **219.5**	× **3**	-N70	
CR OR **220**	× **3**	-N70	
CR OR **221**	× **3**	-N70	
CR OR **222**	× **3**	-N70	
CR OR **223**	× **3**	-N70	
CR OR **224**	× **3**	-N70	
CR OR **225**	× **3**	-N70	
CR OR **226**	× **3**	-N70	
CR OR **227**	× **3**	-N70	
CR OR **228**	× **3**	-N70	
CR OR **229**	× **3**	-N70	
CR OR **229.5**	× **3**	-N70	
CR OR **230**	× **3**	-N70	

We normally stock O-rings of nitrile rubber (N) 70° IRH. Alternative hardnesses or materials, e.g. fluorocarbon rubber (FPM) or silicone rubber (Q) can also be delivered. Contact us for information about materials.

rgab.ru Берг АБ bergab@ya.ru Тел. (495)-228-06-21, факс (495) 2

rgab.ru Берг АБ bergab@ya.ru Тел. (495)-228-06-21, факс (495) 2

O-rings
d_2 3 – 3,5 mm

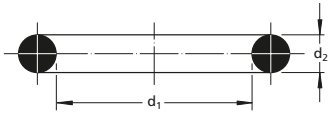

Designation											
	d_1		d_2			d_1		d_2			d_1		d_2	
–	mm			–	–	mm			–	–	mm			–
CR OR	231	×	3	-N70	CR OR	36	×	3.5	-N70	CR OR	86	×	3.5	-N70
CR OR	232	×	3	-N70	CR OR	37	×	3.5	-N70	CR OR	87	×	3.5	-N70
CR OR	233	×	3	-N70	CR OR	38	×	3.5	-N70	CR OR	88	×	3.5	-N70
CR OR	234	×	3	-N70	CR OR	39	×	3.5	-N70	CR OR	89	×	3.5	-N70
CR OR	235	×	3	-N70	CR OR	40	×	3.5	-N70	CR OR	90	×	3.5	-N70
CR OR	236	×	3	-N70	CR OR	41	×	3.5	-N70	CR OR	91	×	3.5	-N70
CR OR	237	×	3	-N70	CR OR	42	×	3.5	-N70	CR OR	92	×	3.5	-N70
CR OR	238	×	3	-N70	CR OR	43	×	3.5	-N70	CR OR	93	×	3.5	-N70
CR OR	239	×	3	-N70	CR OR	44	×	3.5	-N70	CR OR	94	×	3.5	-N70
CR OR	239.5	×	3	-N70	CR OR	45	×	3.5	-N70	CR OR	95	×	3.5	-N70
CR OR	240	×	3	-N70	CR OR	46	×	3.5	-N70	CR OR	96	×	3.5	-N70
CR OR	241	×	3	-N70	CR OR	47	×	3.5	-N70	CR OR	97	×	3.5	-N70
CR OR	242	×	3	-N70	CR OR	48	×	3.5	-N70	CR OR	98	×	3.5	-N70
CR OR	243	×	3	-N70	CR OR	49	×	3.5	-N70	CR OR	99	×	3.5	-N70
CR OR	244	×	3	-N70	CR OR	50	×	3.5	-N70	CR OR	100	×	3.5	-N70
CR OR	245	×	3	-N70	CR OR	51	×	3.5	-N70	CR OR	101	×	3.5	-N70
CR OR	246	×	3	-N70	CR OR	52	×	3.5	-N70	CR OR	102	×	3.5	-N70
CR OR	247	×	3	-N70	CR OR	53	×	3.5	-N70	CR OR	103	×	3.5	-N70
CR OR	248	×	3	-N70	CR OR	54	×	3.5	-N70	CR OR	104	×	3.5	-N70
CR OR	249	×	3	-N70	CR OR	55	×	3.5	-N70	CR OR	105	×	3.5	-N70
CR OR	249.5	×	3	-N70	CR OR	56	×	3.5	-N70	CR OR	106	×	3.5	-N70
CR OR	250	×	3	-N70	CR OR	57	×	3.5	-N70	CR OR	107	×	3.5	-N70
CR OR	8	×	3.5	-N70	CR OR	58	×	3.5	-N70	CR OR	108	×	3.5	-N70
CR OR	9	×	3.5	-N70	CR OR	59	×	3.5	-N70	CR OR	109	×	3.5	-N70
CR OR	10	×	3.5	-N70	CR OR	60	×	3.5	-N70	CR OR	110	×	3.5	-N70
CR OR	11	×	3.5	-N70	CR OR	61	×	3.5	-N70	CR OR	111	×	3.5	-N70
CR OR	12	×	3.5	-N70	CR OR	62	×	3.5	-N70	CR OR	112	×	3.5	-N70
CR OR	13	×	3.5	-N70	CR OR	63	×	3.5	-N70	CR OR	113	×	3.5	-N70
CR OR	14	×	3.5	-N70	CR OR	64	×	3.5	-N70	CR OR	114	×	3.5	-N70
CR OR	15	×	3.5	-N70	CR OR	65	×	3.5	-N70	CR OR	115	×	3.5	-N70
CR OR	16	×	3.5	-N70	CR OR	66	×	3.5	-N70	CR OR	116	×	3.5	-N70
CR OR	17	×	3.5	-N70	CR OR	67	×	3.5	-N70	CR OR	117	×	3.5	-N70
CR OR	18	×	3.5	-N70	CR OR	68	×	3.5	-N70	CR OR	118	×	3.5	-N70
CR OR	19	×	3.5	-N70	CR OR	69	×	3.5	-N70	CR OR	119	×	3.5	-N70
CR OR	20	×	3.5	-N70	CR OR	70	×	3.5	-N70	CR OR	120	×	3.5	-N70
CR OR	21	×	3.5	-N70	CR OR	71	×	3.5	-N70	CR OR	121	×	3.5	-N70
CR OR	22	×	3.5	-N70	CR OR	72	×	3.5	-N70	CR OR	122	×	3.5	-N70
CR OR	23	×	3.5	-N70	CR OR	73	×	3.5	-N70	CR OR	123	×	3.5	-N70
CR OR	24	×	3.5	-N70	CR OR	74	×	3.5	-N70	CR OR	124	×	3.5	-N70
CR OR	25	×	3.5	-N70	CR OR	75	×	3.5	-N70	CR OR	125	×	3.5	-N70
CR OR	26	×	3.5	-N70	CR OR	76	×	3.5	-N70	CR OR	126	×	3.5	-N70
CR OR	27	×	3.5	-N70	CR OR	77	×	3.5	-N70	CR OR	127	×	3.5	-N70
CR OR	28	×	3.5	-N70	CR OR	78	×	3.5	-N70	CR OR	128	×	3.5	-N70
CR OR	29	×	3.5	-N70	CR OR	79	×	3.5	-N70	CR OR	129	×	3.5	-N70
CR OR	30	×	3.5	-N70	CR OR	80	×	3.5	-N70	CR OR	130	×	3.5	-N70
CR OR	31	×	3.5	-N70	CR OR	81	×	3.5	-N70	CR OR	131	×	3.5	-N70
CR OR	32	×	3.5	-N70	CR OR	82	×	3.5	-N70	CR OR	132	×	3.5	-N70
CR OR	33	×	3.5	-N70	CR OR	83	×	3.5	-N70	CR OR	133	×	3.5	-N70
CR OR	34	×	3.5	-N70	CR OR	84	×	3.5	-N70	CR OR	134	×	3.5	-N70
CR OR	35	×	3.5	-N70	CR OR	85	×	3.5	-N70	CR OR	135	×	3.5	-N70

We normally stock O-rings of nitrile rubber (N) 70° IRH. Alternative hardnesses or materials, e.g. fluorocarbon rubber (FPM) or silicone rubber (Q) can also be delivered. Contact us for information about materials.

rgab.ru Берг АБ bergab@ya.ru Тел. (495)-228-06-21, факс (495) 2

rgab.ru Берг АБ bergab@ya.ru Тел. (495)-228-06-21, факс (495) 2

Designation	d_1	d_2	
–	mm		–
CR OR **136**	×	**3.5**	-N70
CR OR **137**	×	**3.5**	-N70
CR OR **138**	×	**3.5**	-N70
CR OR **139**	×	**3.5**	-N70
CR OR **140**	×	**3.5**	-N70
CR OR **141**	×	**3.5**	-N70
CR OR **142**	×	**3.5**	-N70
CR OR **143**	×	**3.5**	-N70
CR OR **144**	×	**3.5**	-N70
CR OR **145**	×	**3.5**	-N70
CR OR **146**	×	**3.5**	-N70
CR OR **147**	×	**3.5**	-N70
CR OR **148**	×	**3.5**	-N70
CR OR **149**	×	**3.5**	-N70
CR OR **150**	×	**3.5**	-N70
CR OR **151**	×	**3.5**	-N70
CR OR **152**	×	**3.5**	-N70
CR OR **153**	×	**3.5**	-N70
CR OR **154**	×	**3.5**	-N70
CR OR **155**	×	**3.5**	-N70
CR OR **156**	×	**3.5**	-N70
CR OR **157**	×	**3.5**	-N70
CR OR **158**	×	**3.5**	-N70
CR OR **159**	×	**3.5**	-N70
CR OR **160**	×	**3.5**	-N70
CR OR **161**	×	**3.5**	-N70
CR OR **162**	×	**3.5**	-N70
CR OR **163**	×	**3.5**	-N70
CR OR **164**	×	**3.5**	-N70
CR OR **165**	×	**3.5**	-N70
CR OR **166**	×	**3.5**	-N70
CR OR **167**	×	**3.5**	-N70
CR OR **168**	×	**3.5**	-N70
CR OR **169**	×	**3.5**	-N70
CR OR **170**	×	**3.5**	-N70
CR OR **171**	×	**3.5**	-N70
CR OR **172**	×	**3.5**	-N70
CR OR **173**	×	**3.5**	-N70
CR OR **174**	×	**3.5**	-N70
CR OR **175**	×	**3.5**	-N70
CR OR **176**	×	**3.5**	-N70
CR OR **177**	×	**3.5**	-N70
CR OR **178**	×	**3.5**	-N70
CR OR **179**	×	**3.5**	-N70
CR OR **180**	×	**3.5**	-N70
CR OR **181**	×	**3.5**	-N70
CR OR **182**	×	**3.5**	-N70
CR OR **183**	×	**3.5**	-N70
CR OR **184**	×	**3.5**	-N70
CR OR **185**	×	**3.5**	-N70

Designation	d_1	d_2	
–	mm		–
CR OR **186**	×	**3.5**	-N70
CR OR **187**	×	**3.5**	-N70
CR OR **188**	×	**3.5**	-N70
CR OR **189**	×	**3.5**	-N70
CR OR **190**	×	**3.5**	-N70
CR OR **191**	×	**3.5**	-N70
CR OR **192**	×	**3.5**	-N70
CR OR **193**	×	**3.5**	-N70
CR OR **194**	×	**3.5**	-N70
CR OR **195**	×	**3.5**	-N70
CR OR **196**	×	**3.5**	-N70
CR OR **197**	×	**3.5**	-N70
CR OR **198**	×	**3.5**	-N70
CR OR **199**	×	**3.5**	-N70
CR OR **200**	×	**3.5**	-N70
CR OR **201**	×	**3.5**	-N70
CR OR **202**	×	**3.5**	-N70
CR OR **203**	×	**3.5**	-N70
CR OR **204**	×	**3.5**	-N70
CR OR **205**	×	**3.5**	-N70
CR OR **206**	×	**3.5**	-N70
CR OR **207**	×	**3.5**	-N70
CR OR **208**	×	**3.5**	-N70
CR OR **209**	×	**3.5**	-N70
CR OR **210**	×	**3.5**	-N70
CR OR **211**	×	**3.5**	-N70
CR OR **212**	×	**3.5**	-N70
CR OR **213**	×	**3.5**	-N70
CR OR **214**	×	**3.5**	-N70
CR OR **215**	×	**3.5**	-N70
CR OR **216**	×	**3.5**	-N70
CR OR **217**	×	**3.5**	-N70
CR OR **218**	×	**3.5**	-N70
CR OR **219**	×	**3.5**	-N70
CR OR **220**	×	**3.5**	-N70
CR OR **221**	×	**3.5**	-N70
CR OR **222**	×	**3.5**	-N70
CR OR **223**	×	**3.5**	-N70
CR OR **224**	×	**3.5**	-N70
CR OR **225**	×	**3.5**	-N70
CR OR **226**	×	**3.5**	-N70
CR OR **227**	×	**3.5**	-N70
CR OR **228**	×	**3.5**	-N70
CR OR **229**	×	**3.5**	-N70
CR OR **230**	×	**3.5**	-N70
CR OR **231**	×	**3.5**	-N70
CR OR **232**	×	**3.5**	-N70
CR OR **233**	×	**3.5**	-N70
CR OR **234**	×	**3.5**	-N70
CR OR **235**	×	**3.5**	-N70

Designation	d_1	d_2	
–	mm		–
CR OR **236**	×	**3.5**	-N70
CR OR **237**	×	**3.5**	-N70
CR OR **238**	×	**3.5**	-N70
CR OR **239**	×	**3.5**	-N70
CR OR **240**	×	**3.5**	-N70
CR OR **241**	×	**3.5**	-N70
CR OR **242**	×	**3.5**	-N70
CR OR **243**	×	**3.5**	-N70
CR OR **244**	×	**3.5**	-N70
CR OR **245**	×	**3.5**	-N70
CR OR **246**	×	**3.5**	-N70
CR OR **247**	×	**3.5**	-N70
CR OR **248**	×	**3.5**	-N70
CR OR **249**	×	**3.5**	-N70
CR OR **250**	×	**3.5**	-N70
CR OR **251**	×	**3.5**	-N70
CR OR **252**	×	**3.5**	-N70
CR OR **253**	×	**3.5**	-N70
CR OR **254**	×	**3.5**	-N70
CR OR **255**	×	**3.5**	-N70
CR OR **256**	×	**3.5**	-N70
CR OR **257**	×	**3.5**	-N70
CR OR **258**	×	**3.5**	-N70
CR OR **259**	×	**3.5**	-N70
CR OR **260**	×	**3.5**	-N70
CR OR **261**	×	**3.5**	-N70
CR OR **262**	×	**3.5**	-N70
CR OR **263**	×	**3.5**	-N70
CR OR **264**	×	**3.5**	-N70
CR OR **265**	×	**3.5**	-N70
CR OR **266**	×	**3.5**	-N70
CR OR **267**	×	**3.5**	-N70
CR OR **268**	×	**3.5**	-N70
CR OR **269**	×	**3.5**	-N70
CR OR **270**	×	**3.5**	-N70
CR OR **271**	×	**3.5**	-N70
CR OR **272**	×	**3.5**	-N70
CR OR **273**	×	**3.5**	-N70
CR OR **274**	×	**3.5**	-N70
CR OR **275**	×	**3.5**	-N70
CR OR **276**	×	**3.5**	-N70
CR OR **277**	×	**3.5**	-N70
CR OR **278**	×	**3.5**	-N70
CR OR **279**	×	**3.5**	-N70
CR OR **280**	×	**3.5**	-N70
CR OR **281**	×	**3.5**	-N70
CR OR **282**	×	**3.5**	-N70
CR OR **283**	×	**3.5**	-N70
CR OR **284**	×	**3.5**	-N70
CR OR **285**	×	**3.5**	-N70

We normally stock O-rings of nitrile rubber (N) 70° IRH. Alternative hardnesses or materials, e.g. fluorocarbon rubber (FPM) or silicone rubber (Q) can also be delivered. Contact us for information about materials.

rgab.ru Берг АБ bergab@ya.ru Тел. (495)-228-06-21, факс (495) 2

rgab.ru Берг АБ bergab@ya.ru Тел. (495)-228-06-21, факс (495) 2

O-rings
d_2 3,5 – 5,55 mm

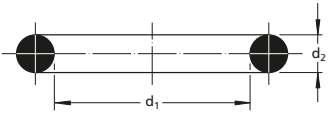

Designation				Designation				Designation			
	d_1		d_2		d_1		d_2		d_1		d_2
–	mm		–	–	mm		–	–	mm		–
CR OR **286**	×	**3.5**	-N70	CR OR **336**	×	**3.5**	-N70	CR OR **386**	×	**3.5**	-N70
CR OR **287**	×	**3.5**	-N70	CR OR **337**	×	**3.5**	-N70	CR OR **387**	×	**3.5**	-N70
CR OR **288**	×	**3.5**	-N70	CR OR **338**	×	**3.5**	-N70	CR OR **388**	×	**3.5**	-N70
CR OR **289**	×	**3.5**	-N70	CR OR **339**	×	**3.5**	-N70	CR OR **389**	×	**3.5**	-N70
CR OR **290**	×	**3.5**	-N70	CR OR **340**	×	**3.5**	-N70	CR OR **390**	×	**3.5**	-N70
CR OR **291**	×	**3.5**	-N70	CR OR **341**	×	**3.5**	-N70	CR OR **391**	×	**3.5**	-N70
CR OR **292**	×	**3.5**	-N70	CR OR **342**	×	**3.5**	-N70	CR OR **392**	×	**3.5**	-N70
CR OR **293**	×	**3.5**	-N70	CR OR **343**	×	**3.5**	-N70	CR OR **393**	×	**3.5**	-N70
CR OR **294**	×	**3.5**	-N70	CR OR **344**	×	**3.5**	-N70	CR OR **394**	×	**3.5**	-N70
CR OR **295**	×	**3.5**	-N70	CR OR **345**	×	**3.5**	-N70	CR OR **395**	×	**3.5**	-N70
CR OR **296**	×	**3.5**	-N70	CR OR **346**	×	**3.5**	-N70	CR OR **396**	×	**3.5**	-N70
CR OR **297**	×	**3.5**	-N70	CR OR **347**	×	**3.5**	-N70	CR OR **397**	×	**3.5**	-N70
CR OR **298**	×	**3.5**	-N70	CR OR **348**	×	**3.5**	-N70	CR OR **398**	×	**3.5**	-N70
CR OR **299**	×	**3.5**	-N70	CR OR **349**	×	**3.5**	-N70	CR OR **399**	×	**3.5**	-N70
CR OR **300**	×	**3.5**	-N70	CR OR **350**	×	**3.5**	-N70	CR OR **400**	×	**3.5**	-N70
CR OR **301**	×	**3.5**	-N70	CR OR **351**	×	**3.5**	-N70	CR OR **401**	×	**3.5**	-N70
CR OR **302**	×	**3.5**	-N70	CR OR **352**	×	**3.5**	-N70	CR OR **402**	×	**3.5**	-N70
CR OR **303**	×	**3.5**	-N70	CR OR **353**	×	**3.5**	-N70	CR OR **403**	×	**3.5**	-N70
CR OR **304**	×	**3.5**	-N70	CR OR **354**	×	**3.5**	-N70	CR OR **404**	×	**3.5**	-N70
CR OR **305**	×	**3.5**	-N70	CR OR **355**	×	**3.5**	-N70	CR OR **405**	×	**3.5**	-N70
CR OR **306**	×	**3.5**	-N70	CR OR **356**	×	**3.5**	-N70	CR OR **406**	×	**3.5**	-N70
CR OR **307**	×	**3.5**	-N70	CR OR **357**	×	**3.5**	-N70	CR OR **407**	×	**3.5**	-N70
CR OR **308**	×	**3.5**	-N70	CR OR **358**	×	**3.5**	-N70	CR OR **408**	×	**3.5**	-N70
CR OR **309**	×	**3.5**	-N70	CR OR **359**	×	**3.5**	-N70	CR OR **409**	×	**3.5**	-N70
CR OR **310**	×	**3.5**	-N70	CR OR **360**	×	**3.5**	-N70	CR OR **410**	×	**3.5**	-N70
CR OR **311**	×	**3.5**	-N70	CR OR **361**	×	**3.5**	-N70	CR OR **411**	×	**3.5**	-N70
CR OR **312**	×	**3.5**	-N70	CR OR **362**	×	**3.5**	-N70	CR OR **412**	×	**3.5**	-N70
CR OR **313**	×	**3.5**	-N70	CR OR **363**	×	**3.5**	-N70	CR OR **413**	×	**3.5**	-N70
CR OR **314**	×	**3.5**	-N70	CR OR **364**	×	**3.5**	-N70	CR OR **414**	×	**3.5**	-N70
CR OR **315**	×	**3.5**	-N70	CR OR **365**	×	**3.5**	-N70	CR OR **415**	×	**3.5**	-N70
CR OR **316**	×	**3.5**	-N70	CR OR **366**	×	**3.5**	-N70	CR OR **416**	×	**3.5**	-N70
CR OR **317**	×	**3.5**	-N70	CR OR **367**	×	**3.5**	-N70	CR OR **417**	×	**3.5**	-N70
CR OR **318**	×	**3.5**	-N70	CR OR **368**	×	**3.5**	-N70	CR OR **418**	×	**3.5**	-N70
CR OR **319**	×	**3.5**	-N70	CR OR **369**	×	**3.5**	-N70	CR OR **419**	×	**3.5**	-N70
CR OR **320**	×	**3.5**	-N70	CR OR **370**	×	**3.5**	-N70	CR OR **420**	×	**3.5**	-N70
CR OR **321**	×	**3.5**	-N70	CR OR **371**	×	**3.5**	-N70	CR OR **421**	×	**3.5**	-N70
CR OR **322**	×	**3.5**	-N70	CR OR **372**	×	**3.5**	-N70	CR OR **422**	×	**3.5**	-N70
CR OR **323**	×	**3.5**	-N70	CR OR **373**	×	**3.5**	-N70	CR OR **423**	×	**3.5**	-N70
CR OR **324**	×	**3.5**	-N70	CR OR **374**	×	**3.5**	-N70	CR OR **424**	×	**3.5**	-N70
CR OR **325**	×	**3.5**	-N70	CR OR **375**	×	**3.5**	-N70	CR OR **425**	×	**3.5**	-N70
CR OR **326**	×	**3.5**	-N70	CR OR **376**	×	**3.5**	-N70	CR OR **426**	×	**3.5**	-N70
CR OR **327**	×	**3.5**	-N70	CR OR **377**	×	**3.5**	-N70	CR OR **427**	×	**3.5**	-N70
CR OR **328**	×	**3.5**	-N70	CR OR **378**	×	**3.5**	-N70	CR OR **428**	×	**3.5**	-N70
CR OR **329**	×	**3.5**	-N70	CR OR **379**	×	**3.5**	-N70	CR OR **429**	×	**3.5**	-N70
CR OR **330**	×	**3.5**	-N70	CR OR **380**	×	**3.5**	-N70	CR OR **430**	×	**3.5**	-N70
CR OR **331**	×	**3.5**	-N70	CR OR **381**	×	**3.5**	-N70	CR OR **431**	×	**3.5**	-N70
CR OR **332**	×	**3.5**	-N70	CR OR **382**	×	**3.5**	-N70	CR OR **432**	×	**3.5**	-N70
CR OR **333**	×	**3.5**	-N70	CR OR **383**	×	**3.5**	-N70	CR OR **433**	×	**3.5**	-N70
CR OR **334**	×	**3.5**	-N70	CR OR **384**	×	**3.5**	-N70	CR OR **434**	×	**3.5**	-N70
CR OR **335**	×	**3.5**	-N70	CR OR **385**	×	**3.5**	-N70	CR OR **435**	×	**3.5**	-N70

We normally stock O-rings of nitrile rubber (N) 70° IRH. Alternative hardnesses or materials, e.g. fluorocarbon rubber (FPM) or silicone rubber (Q) can also be delivered. Contact us for information about materials.

rgab.ru Берг АБ bergab@ya.ru Тел. (495)-228-06-21, факс (495) 2

rgab.ru Берг АБ bergab@ya.ru Тел. (495)-228-06-21, факс (495) 22

Designation	d_1		d_2	
–	mm			–
CR OR	**436**	×	**3.5**	-N70
CR OR	**437**	×	**3.5**	-N70
CR OR	**438**	×	**3.5**	-N70
CR OR	**439**	×	**3.5**	-N70
CR OR	**440**	×	**3.5**	-N70
CR OR	**4.34**	×	**3.53**	-N70
CR OR	**5.94**	×	**3.53**	-N70
CR OR	**7.52**	×	**3.53**	-N70
CR OR	**9.12**	×	**3.53**	-N70
CR OR	**10.69**	×	**3.53**	-N70
CR OR	**12.29**	×	**3.53**	-N70
CR OR	**13.87**	×	**3.53**	-N70
CR OR	**15.47**	×	**3.53**	-N70
CR OR	**17.04**	×	**3.53**	-N70
CR OR	**18.64**	×	**3.53**	-N70
CR OR	**20.22**	×	**3.53**	-N70
CR OR	**21.82**	×	**3.53**	-N70
CR OR	**23.39**	×	**3.53**	-N70
CR OR	**24.99**	×	**3.53**	-N70
CR OR	**25.8**	×	**3.53**	-N70
CR OR	**26.57**	×	**3.53**	-N70
CR OR	**28.17**	×	**3.53**	-N70
CR OR	**29.74**	×	**3.53**	-N70
CR OR	**31.34**	×	**3.53**	-N70
CR OR	**32.92**	×	**3.53**	-N70
CR OR	**34.52**	×	**3.53**	-N70
CR OR	**36.09**	×	**3.53**	-N70
CR OR	**37.69**	×	**3.53**	-N70
CR OR	**39.7**	×	**3.53**	-N70
CR OR	**40.87**	×	**3.53**	-N70
CR OR	**41.28**	×	**3.53**	-N70
CR OR	**42.86**	×	**3.53**	-N70
CR OR	**44.04**	×	**3.53**	-N70
CR OR	**44.45**	×	**3.53**	-N70
CR OR	**44.95**	×	**3.53**	-N70
CR OR	**46.04**	×	**3.53**	-N70
CR OR	**47.22**	×	**3.53**	-N70
CR OR	**47.62**	×	**3.53**	-N70
CR OR	**49.2**	×	**3.53**	-N70
CR OR	**50.39**	×	**3.53**	-N70
CR OR	**50.8**	×	**3.53**	-N70
CR OR	**52.4**	×	**3.53**	-N70
CR OR	**53.57**	×	**3.53**	-N70
CR OR	**53.97**	×	**3.53**	-N70
CR OR	**55.56**	×	**3.53**	-N70
CR OR	**56.74**	×	**3.53**	-N70
CR OR	**57.15**	×	**3.53**	-N70
CR OR	**58.74**	×	**3.53**	-N70
CR OR	**59.92**	×	**3.53**	-N70
CR OR	**60.32**	×	**3.53**	-N70

Designation	d_1		d_2	
–	mm			–
CR OR	**61.9**	×	**3.53**	-N70
CR OR	**63.09**	×	**3.53**	-N70
CR OR	**63.5**	×	**3.53**	-N70
CR OR	**65.1**	×	**3.53**	-N70
CR OR	**66.27**	×	**3.53**	-N70
CR OR	**66.67**	×	**3.53**	-N70
CR OR	**68.26**	×	**3.53**	-N70
CR OR	**69.44**	×	**3.53**	-N70
CR OR	**69.85**	×	**3.53**	-N70
CR OR	**71.44**	×	**3.53**	-N70
CR OR	**72.62**	×	**3.53**	-N70
CR OR	**73.02**	×	**3.53**	-N70
CR OR	**74.6**	×	**3.53**	-N70
CR OR	**75.79**	×	**3.53**	-N70
CR OR	**78.97**	×	**3.53**	-N70
CR OR	**82.14**	×	**3.53**	-N70
CR OR	**85.32**	×	**3.53**	-N70
CR OR	**88.49**	×	**3.53**	-N70
CR OR	**91.67**	×	**3.53**	-N70
CR OR	**94.84**	×	**3.53**	-N70
CR OR	**98.02**	×	**3.53**	-N70
CR OR	**101.19**	×	**3.53**	-N70
CR OR	**104.37**	×	**3.53**	-N70
CR OR	**107.54**	×	**3.53**	-N70
CR OR	**110.72**	×	**3.53**	-N70
CR OR	**113.89**	×	**3.53**	-N70
CR OR	**117.07**	×	**3.53**	-N70
CR OR	**120.24**	×	**3.53**	-N70
CR OR	**123.42**	×	**3.53**	-N70
CR OR	**126.59**	×	**3.53**	-N70
CR OR	**129.77**	×	**3.53**	-N70
CR OR	**132.94**	×	**3.53**	-N70
CR OR	**136.12**	×	**3.53**	-N70
CR OR	**139.29**	×	**3.53**	-N70
CR OR	**142.47**	×	**3.53**	-N70
CR OR	**145.64**	×	**3.53**	-N70
CR OR	**148.82**	×	**3.53**	-N70
CR OR	**151.99**	×	**3.53**	-N70
CR OR	**158.34**	×	**3.53**	-N70
CR OR	**164.69**	×	**3.53**	-N70
CR OR	**171.04**	×	**3.53**	-N70
CR OR	**177.39**	×	**3.53**	-N70
CR OR	**183.74**	×	**3.53**	-N70
CR OR	**190.09**	×	**3.53**	-N70
CR OR	**196.44**	×	**3.53**	-N70
CR OR	**202.79**	×	**3.53**	-N70
CR OR	**209.14**	×	**3.53**	-N70
CR OR	**215.49**	×	**3.53**	-N70
CR OR	**221.84**	×	**3.53**	-N70
CR OR	**228.19**	×	**3.53**	-N70

Designation	d_1		d_2	
–	mm			–
CR OR	**234.54**	×	**3.53**	-N70
CR OR	**240.89**	×	**3.53**	-N70
CR OR	**247.26**	×	**3.53**	-N70
CR OR	**253.59**	×	**3.53**	-N70
CR OR	**266.29**	×	**3.53**	-N70
CR OR	**278.99**	×	**3.53**	-N70
CR OR	**291.69**	×	**3.53**	-N70
CR OR	**304.39**	×	**3.53**	-N70
CR OR	**329.79**	×	**3.53**	-N70
CR OR	**355.19**	×	**3.53**	-N70
CR OR	**380.59**	×	**3.53**	-N70
CR OR	**405.26**	×	**3.53**	-N70
CR OR	**430.66**	×	**3.53**	-N70
CR OR	**456.06**	×	**3.53**	-N70
CR OR	**18**	×	**3.55**	-N70
CR OR	**19**	×	**3.55**	-N70
CR OR	**20**	×	**3.55**	-N70
CR OR	**21.2**	×	**3.55**	-N70
CR OR	**22.4**	×	**3.55**	-N70
CR OR	**23.6**	×	**3.55**	-N70
CR OR	**25**	×	**3.55**	-N70
CR OR	**25.8**	×	**3.55**	-N70
CR OR	**26.5**	×	**3.55**	-N70
CR OR	**28**	×	**3.55**	-N70
CR OR	**30**	×	**3.55**	-N70
CR OR	**31.5**	×	**3.55**	-N70
CR OR	**32.5**	×	**3.55**	-N70
CR OR	**33.5**	×	**3.55**	-N70
CR OR	**34.5**	×	**3.55**	-N70
CR OR	**35.5**	×	**3.55**	-N70
CR OR	**36.5**	×	**3.55**	-N70
CR OR	**37.5**	×	**3.55**	-N70
CR OR	**38.7**	×	**3.55**	-N70
CR OR	**40**	×	**3.55**	-N70
CR OR	**41.2**	×	**3.55**	-N70
CR OR	**42.5**	×	**3.55**	-N70
CR OR	**43.7**	×	**3.55**	-N70
CR OR	**45**	×	**3.55**	-N70
CR OR	**46.2**	×	**3.55**	-N70
CR OR	**47.5**	×	**3.55**	-N70
CR OR	**48.7**	×	**3.55**	-N70
CR OR	**50**	×	**3.55**	-N70
CR OR	**51.5**	×	**3.55**	-N70
CR OR	**53**	×	**3.55**	-N70
CR OR	**54.5**	×	**3.55**	-N70
CR OR	**56**	×	**3.55**	-N70
CR OR	**58**	×	**3.55**	-N70
CR OR	**60**	×	**3.55**	-N70
CR OR	**61.5**	×	**3.55**	-N70
CR OR	**63**	×	**3.55**	-N70

We normally stock O-rings of nitrile rubber (N) 70° IRH. Alternative hardnesses or materials, e.g. fluorocarbon rubber (FPM) or silicone rubber (Q) can also be delivered. Contact us for information about materials.

rgab.ru Берг АБ bergab@ya.ru Тел. (495)-228-06-21, факс (495) 22

rgab.ru Берг АБ bergab@ya.ru Тел. (495)-228-06-21, факс (495) 2

O-rings
d_2 3,55 – 4 mm

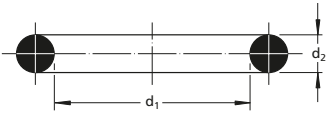

Designation											
	d_1		d_2			d_1		d_2			d_1		d_2	
–	mm		–		–	mm		–		–	mm		–	
CR OR	**65**	×	**3.55**	-N70	CR OR	**34.1**	×	**3.6**	-N70	CR OR	**50**	×	**4**	-N70
CR OR	**67**	×	**3.55**	-N70	CR OR	**35.6**	×	**3.6**	-N70	CR OR	**51**	×	**4**	-N70
CR OR	**69**	×	**3.55**	-N70	CR OR	**37.3**	×	**3.6**	-N70	CR OR	**52**	×	**4**	-N70
CR OR	**71**	×	**3.55**	-N70	CR OR	**43.4**	×	**3.6**	-N70	CR OR	**53**	×	**4**	-N70
CR OR	**73**	×	**3.55**	-N70	CR OR	**4**	×	**4**	-N70	CR OR	**54**	×	**4**	-N70
CR OR	**75**	×	**3.55**	-N70	CR OR	**5**	×	**4**	-N70	CR OR	**55**	×	**4**	-N70
CR OR	**77.5**	×	**3.55**	-N70	CR OR	**6**	×	**4**	-N70	CR OR	**56**	×	**4**	-N70
CR OR	**80**	×	**3.55**	-N70	CR OR	**7**	×	**4**	-N70	CR OR	**57**	×	**4**	-N70
CR OR	**82.5**	×	**3.55**	-N70	CR OR	**8**	×	**4**	-N70	CR OR	**58**	×	**4**	-N70
CR OR	**85**	×	**3.55**	-N70	CR OR	**9**	×	**4**	-N70	CR OR	**59**	×	**4**	-N70
CR OR	**87.5**	×	**3.55**	-N70	CR OR	**10**	×	**4**	-N70	CR OR	**60**	×	**4**	-N70
CR OR	**90**	×	**3.55**	-N70	CR OR	**11**	×	**4**	-N70	CR OR	**61**	×	**4**	-N70
CR OR	**92.5**	×	**3.55**	-N70	CR OR	**12**	×	**4**	-N70	CR OR	**62**	×	**4**	-N70
CR OR	**95**	×	**3.55**	-N70	CR OR	**13**	×	**4**	-N70	CR OR	**63**	×	**4**	-N70
CR OR	**97.5**	×	**3.55**	-N70	CR OR	**14**	×	**4**	-N70	CR OR	**64**	×	**4**	-N70
CR OR	**100**	×	**3.55**	-N70	CR OR	**15**	×	**4**	-N70	CR OR	**65**	×	**4**	-N70
CR OR	**103**	×	**3.55**	-N70	CR OR	**16**	×	**4**	-N70	CR OR	**66**	×	**4**	-N70
CR OR	**106**	×	**3.55**	-N70	CR OR	**17**	×	**4**	-N70	CR OR	**67**	×	**4**	-N70
CR OR	**109**	×	**3.55**	-N70	CR OR	**18**	×	**4**	-N70	CR OR	**68**	×	**4**	-N70
CR OR	**112**	×	**3.55**	-N70	CR OR	**19**	×	**4**	-N70	CR OR	**69**	×	**4**	-N70
CR OR	**115**	×	**3.55**	-N70	CR OR	**20**	×	**4**	-N70	CR OR	**70**	×	**4**	-N70
CR OR	**118**	×	**3.55**	-N70	CR OR	**21**	×	**4**	-N70	CR OR	**71**	×	**4**	-N70
CR OR	**122**	×	**3.55**	-N70	CR OR	**22**	×	**4**	-N70	CR OR	**72**	×	**4**	-N70
CR OR	**125**	×	**3.55**	-N70	CR OR	**23**	×	**4**	-N70	CR OR	**73**	×	**4**	-N70
CR OR	**128**	×	**3.55**	-N70	CR OR	**24**	×	**4**	-N70	CR OR	**74**	×	**4**	-N70
CR OR	**132**	×	**3.55**	-N70	CR OR	**25**	×	**4**	-N70	CR OR	**75**	×	**4**	-N70
CR OR	**136**	×	**3.55**	-N70	CR OR	**26**	×	**4**	-N70	CR OR	**76**	×	**4**	-N70
CR OR	**140**	×	**3.55**	-N70	CR OR	**27**	×	**4**	-N70	CR OR	**77**	×	**4**	-N70
CR OR	**145**	×	**3.55**	-N70	CR OR	**28**	×	**4**	-N70	CR OR	**78**	×	**4**	-N70
CR OR	**150**	×	**3.55**	-N70	CR OR	**29**	×	**4**	-N70	CR OR	**79**	×	**4**	-N70
CR OR	**155**	×	**3.55**	-N70	CR OR	**30**	×	**4**	-N70	CR OR	**80**	×	**4**	-N70
CR OR	**160**	×	**3.55**	-N70	CR OR	**31**	×	**4**	-N70	CR OR	**81**	×	**4**	-N70
CR OR	**165**	×	**3.55**	-N70	CR OR	**32**	×	**4**	-N70	CR OR	**82**	×	**4**	-N70
CR OR	**170**	×	**3.55**	-N70	CR OR	**33**	×	**4**	-N70	CR OR	**83**	×	**4**	-N70
CR OR	**175**	×	**3.55**	-N70	CR OR	**34**	×	**4**	-N70	CR OR	**84**	×	**4**	-N70
CR OR	**180**	×	**3.55**	-N70	CR OR	**35**	×	**4**	-N70	CR OR	**85**	×	**4**	-N70
CR OR	**185**	×	**3.55**	-N70	CR OR	**36**	×	**4**	-N70	CR OR	**86**	×	**4**	-N70
CR OR	**190**	×	**3.55**	-N70	CR OR	**37**	×	**4**	-N70	CR OR	**87**	×	**4**	-N70
CR OR	**195**	×	**3.55**	-N70	CR OR	**38**	×	**4**	-N70	CR OR	**88**	×	**4**	-N70
CR OR	**200**	×	**3.55**	-N70	CR OR	**39**	×	**4**	-N70	CR OR	**89**	×	**4**	-N70
CR OR	**18.3**	×	**3.6**	-N70	CR OR	**40**	×	**4**	-N70	CR OR	**90**	×	**4**	-N70
CR OR	**19.8**	×	**3.6**	-N70	CR OR	**41**	×	**4**	-N70	CR OR	**91**	×	**4**	-N70
CR OR	**21.3**	×	**3.6**	-N70	CR OR	**42**	×	**4**	-N70	CR OR	**92**	×	**4**	-N70
CR OR	**23**	×	**3.6**	-N70	CR OR	**43**	×	**4**	-N70	CR OR	**93**	×	**4**	-N70
CR OR	**24.6**	×	**3.6**	-N70	CR OR	**44**	×	**4**	-N70	CR OR	**94**	×	**4**	-N70
CR OR	**26.2**	×	**3.6**	-N70	CR OR	**45**	×	**4**	-N70	CR OR	**95**	×	**4**	-N70
CR OR	**27.8**	×	**3.6**	-N70	CR OR	**46**	×	**4**	-N70	CR OR	**96**	×	**4**	-N70
CR OR	**29.3**	×	**3.6**	-N70	CR OR	**47**	×	**4**	-N70	CR OR	**97**	×	**4**	-N70
CR OR	**30.8**	×	**3.6**	-N70	CR OR	**48**	×	**4**	-N70	CR OR	**98**	×	**4**	-N70
CR OR	**32.5**	×	**3.6**	-N70	CR OR	**49**	×	**4**	-N70	CR OR	**99**	×	**4**	-N70

We normally stock O-rings of nitrile rubber (N) 70° IRH. Alternative hardnesses or materials, e.g. fluorocarbon rubber (FPM) or silicone rubber (Q) can also be delivered. Contact us for information about materials.

rgab.ru Берг АБ bergab@ya.ru Тел. (495)-228-06-21, факс (495) 2

rgab.ru Берг АБ bergab@ya.ru Тел. (495)-228-06-21, факс (495) 2

Designation	d_1	d_2	
–	mm		–
CR OR **100**	×	**4**	-N70
CR OR **101**	×	**4**	-N70
CR OR **102**	×	**4**	-N70
CR OR **103**	×	**4**	-N70
CR OR **104**	×	**4**	-N70
CR OR **105**	×	**4**	-N70
CR OR **106**	×	**4**	-N70
CR OR **107**	×	**4**	-N70
CR OR **108**	×	**4**	-N70
CR OR **109**	×	**4**	-N70
CR OR **110**	×	**4**	-N70
CR OR **111**	×	**4**	-N70
CR OR **112**	×	**4**	-N70
CR OR **113**	×	**4**	-N70
CR OR **114**	×	**4**	-N70
CR OR **115**	×	**4**	-N70
CR OR **116**	×	**4**	-N70
CR OR **117**	×	**4**	-N70
CR OR **118**	×	**4**	-N70
CR OR **119**	×	**4**	-N70
CR OR **120**	×	**4**	-N70
CR OR **121**	×	**4**	-N70
CR OR **122**	×	**4**	-N70
CR OR **123**	×	**4**	-N70
CR OR **124**	×	**4**	-N70
CR OR **125**	×	**4**	-N70
CR OR **126**	×	**4**	-N70
CR OR **127**	×	**4**	-N70
CR OR **128**	×	**4**	-N70
CR OR **129**	×	**4**	-N70
CR OR **130**	×	**4**	-N70
CR OR **131**	×	**4**	-N70
CR OR **132**	×	**4**	-N70
CR OR **133**	×	**4**	-N70
CR OR **134**	×	**4**	-N70
CR OR **135**	×	**4**	-N70
CR OR **136**	×	**4**	-N70
CR OR **137**	×	**4**	-N70
CR OR **138**	×	**4**	-N70
CR OR **139**	×	**4**	-N70
CR OR **140**	×	**4**	-N70
CR OR **141**	×	**4**	-N70
CR OR **142**	×	**4**	-N70
CR OR **143**	×	**4**	-N70
CR OR **144**	×	**4**	-N70
CR OR **145**	×	**4**	-N70
CR OR **146**	×	**4**	-N70
CR OR **147**	×	**4**	-N70
CR OR **148**	×	**4**	-N70
CR OR **149**	×	**4**	-N70

Designation	d_1	d_2	
–	mm		–
CR OR **150**	×	**4**	-N70
CR OR **151**	×	**4**	-N70
CR OR **152**	×	**4**	-N70
CR OR **153**	×	**4**	-N70
CR OR **154**	×	**4**	-N70
CR OR **155**	×	**4**	-N70
CR OR **156**	×	**4**	-N70
CR OR **157**	×	**4**	-N70
CR OR **158**	×	**4**	-N70
CR OR **159**	×	**4**	-N70
CR OR **160**	×	**4**	-N70
CR OR **161**	×	**4**	-N70
CR OR **162**	×	**4**	-N70
CR OR **163**	×	**4**	-N70
CR OR **164**	×	**4**	-N70
CR OR **165**	×	**4**	-N70
CR OR **166**	×	**4**	-N70
CR OR **167**	×	**4**	-N70
CR OR **168**	×	**4**	-N70
CR OR **169**	×	**4**	-N70
CR OR **170**	×	**4**	-N70
CR OR **171**	×	**4**	-N70
CR OR **172**	×	**4**	-N70
CR OR **173**	×	**4**	-N70
CR OR **174**	×	**4**	-N70
CR OR **175**	×	**4**	-N70
CR OR **176**	×	**4**	-N70
CR OR **177**	×	**4**	-N70
CR OR **178**	×	**4**	-N70
CR OR **179**	×	**4**	-N70
CR OR **180**	×	**4**	-N70
CR OR **181**	×	**4**	-N70
CR OR **182**	×	**4**	-N70
CR OR **183**	×	**4**	-N70
CR OR **184**	×	**4**	-N70
CR OR **185**	×	**4**	-N70
CR OR **186**	×	**4**	-N70
CR OR **187**	×	**4**	-N70
CR OR **188**	×	**4**	-N70
CR OR **189**	×	**4**	-N70
CR OR **190**	×	**4**	-N70
CR OR **191**	×	**4**	-N70
CR OR **192**	×	**4**	-N70
CR OR **193**	×	**4**	-N70
CR OR **194**	×	**4**	-N70
CR OR **195**	×	**4**	-N70
CR OR **196**	×	**4**	-N70
CR OR **197**	×	**4**	-N70
CR OR **198**	×	**4**	-N70
CR OR **199**	×	**4**	-N70

Designation	d_1	d_2	
–	mm		–
CR OR **200**	×	**4**	-N70
CR OR **201**	×	**4**	-N70
CR OR **202**	×	**4**	-N70
CR OR **203**	×	**4**	-N70
CR OR **204**	×	**4**	-N70
CR OR **205**	×	**4**	-N70
CR OR **206**	×	**4**	-N70
CR OR **207**	×	**4**	-N70
CR OR **208**	×	**4**	-N70
CR OR **209**	×	**4**	-N70
CR OR **210**	×	**4**	-N70
CR OR **211**	×	**4**	-N70
CR OR **212**	×	**4**	-N70
CR OR **213**	×	**4**	-N70
CR OR **214**	×	**4**	-N70
CR OR **215**	×	**4**	-N70
CR OR **216**	×	**4**	-N70
CR OR **217**	×	**4**	-N70
CR OR **218**	×	**4**	-N70
CR OR **219**	×	**4**	-N70
CR OR **220**	×	**4**	-N70
CR OR **221**	×	**4**	-N70
CR OR **222**	×	**4**	-N70
CR OR **223**	×	**4**	-N70
CR OR **224**	×	**4**	-N70
CR OR **225**	×	**4**	-N70
CR OR **226**	×	**4**	-N70
CR OR **227**	×	**4**	-N70
CR OR **228**	×	**4**	-N70
CR OR **229**	×	**4**	-N70
CR OR **230**	×	**4**	-N70
CR OR **231**	×	**4**	-N70
CR OR **232**	×	**4**	-N70
CR OR **233**	×	**4**	-N70
CR OR **234**	×	**4**	-N70
CR OR **235**	×	**4**	-N70
CR OR **236**	×	**4**	-N70
CR OR **237**	×	**4**	-N70
CR OR **238**	×	**4**	-N70
CR OR **239**	×	**4**	-N70
CR OR **240**	×	**4**	-N70
CR OR **241**	×	**4**	-N70
CR OR **242**	×	**4**	-N70
CR OR **243**	×	**4**	-N70
CR OR **244**	×	**4**	-N70
CR OR **245**	×	**4**	-N70
CR OR **246**	×	**4**	-N70
CR OR **247**	×	**4**	-N70
CR OR **248**	×	**4**	-N70
CR OR **249**	×	**4**	-N70

We normally stock O-rings of nitrile rubber (N) 70° IRH. Alternative hardnesses or materials, e.g. fluorocarbon rubber (FPM) or silicone rubber (Q) can also be delivered. Contact us for information about materials.

rgab.ru Берг АБ bergab@ya.ru Тел. (495)-228-06-21, факс (495) 2

rgab.ru Берг АБ bergab@ya.ru Тел. (495)-228-06-21, факс (495) 2

d_2 4 – 4,5 mm

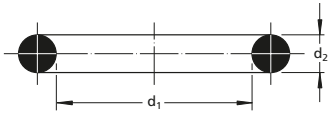

Designation				Designation				Designation			
	d_1		d_2		d_1		d_2		d_1		d_2
–	mm		–	–	mm		–	–	mm		–
CR OR **250**	×	**4**	-N70	CR OR **300**	×	**4**	-N70	CR OR **350**	×	**4**	-N70
CR OR **251**	×	**4**	-N70	CR OR **301**	×	**4**	-N70	CR OR **351**	×	**4**	-N70
CR OR **252**	×	**4**	-N70	CR OR **302**	×	**4**	-N70	CR OR **352**	×	**4**	-N70
CR OR **253**	×	**4**	-N70	CR OR **303**	×	**4**	-N70	CR OR **353**	×	**4**	-N70
CR OR **254**	×	**4**	-N70	CR OR **304**	×	**4**	-N70	CR OR **354**	×	**4**	-N70
CR OR **255**	×	**4**	-N70	CR OR **305**	×	**4**	-N70	CR OR **355**	×	**4**	-N70
CR OR **256**	×	**4**	-N70	CR OR **306**	×	**4**	-N70	CR OR **356**	×	**4**	-N70
CR OR **257**	×	**4**	-N70	CR OR **307**	×	**4**	-N70	CR OR **357**	×	**4**	-N70
CR OR **258**	×	**4**	-N70	CR OR **308**	×	**4**	-N70	CR OR **358**	×	**4**	-N70
CR OR **259**	×	**4**	-N70	CR OR **309**	×	**4**	-N70	CR OR **359**	×	**4**	-N70
CR OR **260**	×	**4**	-N70	CR OR **310**	×	**4**	-N70	CR OR **360**	×	**4**	-N70
CR OR **261**	×	**4**	-N70	CR OR **311**	×	**4**	-N70	CR OR **361**	×	**4**	-N70
CR OR **262**	×	**4**	-N70	CR OR **312**	×	**4**	-N70	CR OR **362**	×	**4**	-N70
CR OR **263**	×	**4**	-N70	CR OR **313**	×	**4**	-N70	CR OR **363**	×	**4**	-N70
CR OR **264**	×	**4**	-N70	CR OR **314**	×	**4**	-N70	CR OR **364**	×	**4**	-N70
CR OR **265**	×	**4**	-N70	CR OR **315**	×	**4**	-N70	CR OR **365**	×	**4**	-N70
CR OR **266**	×	**4**	-N70	CR OR **316**	×	**4**	-N70	CR OR **366**	×	**4**	-N70
CR OR **267**	×	**4**	-N70	CR OR **317**	×	**4**	-N70	CR OR **367**	×	**4**	-N70
CR OR **268**	×	**4**	-N70	CR OR **318**	×	**4**	-N70	CR OR **368**	×	**4**	-N70
CR OR **269**	×	**4**	-N70	CR OR **319**	×	**4**	-N70	CR OR **369**	×	**4**	-N70
CR OR **270**	×	**4**	-N70	CR OR **320**	×	**4**	-N70	CR OR **370**	×	**4**	-N70
CR OR **271**	×	**4**	-N70	CR OR **321**	×	**4**	-N70	CR OR **371**	×	**4**	-N70
CR OR **272**	×	**4**	-N70	CR OR **322**	×	**4**	-N70	CR OR **372**	×	**4**	-N70
CR OR **273**	×	**4**	-N70	CR OR **323**	×	**4**	-N70	CR OR **373**	×	**4**	-N70
CR OR **274**	×	**4**	-N70	CR OR **324**	×	**4**	-N70	CR OR **374**	×	**4**	-N70
CR OR **275**	×	**4**	-N70	CR OR **325**	×	**4**	-N70	CR OR **375**	×	**4**	-N70
CR OR **276**	×	**4**	-N70	CR OR **326**	×	**4**	-N70	CR OR **376**	×	**4**	-N70
CR OR **277**	×	**4**	-N70	CR OR **327**	×	**4**	-N70	CR OR **377**	×	**4**	-N70
CR OR **278**	×	**4**	-N70	CR OR **328**	×	**4**	-N70	CR OR **378**	×	**4**	-N70
CR OR **279**	×	**4**	-N70	CR OR **329**	×	**4**	-N70	CR OR **379**	×	**4**	-N70
CR OR **280**	×	**4**	-N70	CR OR **330**	×	**4**	-N70	CR OR **380**	×	**4**	-N70
CR OR **281**	×	**4**	-N70	CR OR **331**	×	**4**	-N70	CR OR **381**	×	**4**	-N70
CR OR **282**	×	**4**	-N70	CR OR **332**	×	**4**	-N70	CR OR **382**	×	**4**	-N70
CR OR **283**	×	**4**	-N70	CR OR **333**	×	**4**	-N70	CR OR **383**	×	**4**	-N70
CR OR **284**	×	**4**	-N70	CR OR **334**	×	**4**	-N70	CR OR **384**	×	**4**	-N70
CR OR **285**	×	**4**	-N70	CR OR **335**	×	**4**	-N70	CR OR **385**	×	**4**	-N70
CR OR **286**	×	**4**	-N70	CR OR **336**	×	**4**	-N70	CR OR **386**	×	**4**	-N70
CR OR **287**	×	**4**	-N70	CR OR **337**	×	**4**	-N70	CR OR **387**	×	**4**	-N70
CR OR **288**	×	**4**	-N70	CR OR **338**	×	**4**	-N70	CR OR **388**	×	**4**	-N70
CR OR **289**	×	**4**	-N70	CR OR **339**	×	**4**	-N70	CR OR **389**	×	**4**	-N70
CR OR **290**	×	**4**	-N70	CR OR **340**	×	**4**	-N70	CR OR **390**	×	**4**	-N70
CR OR **291**	×	**4**	-N70	CR OR **341**	×	**4**	-N70	CR OR **391**	×	**4**	-N70
CR OR **292**	×	**4**	-N70	CR OR **342**	×	**4**	-N70	CR OR **392**	×	**4**	-N70
CR OR **293**	×	**4**	-N70	CR OR **343**	×	**4**	-N70	CR OR **393**	×	**4**	-N70
CR OR **294**	×	**4**	-N70	CR OR **344**	×	**4**	-N70	CR OR **394**	×	**4**	-N70
CR OR **295**	×	**4**	-N70	CR OR **345**	×	**4**	-N70	CR OR **395**	×	**4**	-N70
CR OR **296**	×	**4**	-N70	CR OR **346**	×	**4**	-N70	CR OR **396**	×	**4**	-N70
CR OR **297**	×	**4**	-N70	CR OR **347**	×	**4**	-N70	CR OR **397**	×	**4**	-N70
CR OR **298**	×	**4**	-N70	CR OR **348**	×	**4**	-N70	CR OR **398**	×	**4**	-N70
CR OR **299**	×	**4**	-N70	CR OR **349**	×	**4**	-N70	CR OR **399**	×	**4**	-N70

We normally stock O-rings of nitrile rubber (N) 70° IRH. Alternative hardnesses or materials, e.g. fluorocarbon rubber (FPM) or silicone rubber (Q) can also be delivered. Contact us for information about materials.

rgab.ru Берг АБ bergab@ya.ru Тел. (495)-228-06-21, факс (495) 2

rgab.ru Берг АБ bergab@ya.ru Тел. (495)-228-06-21, факс (495) 2

Designation	d_1	d_2	
–	mm		–
CR OR **400**	× **4**		-N70
CR OR **401**	× **4**		-N70
CR OR **402**	× **4**		-N70
CR OR **403**	× **4**		-N70
CR OR **404**	× **4**		-N70
CR OR **405**	× **4**		-N70
CR OR **406**	× **4**		-N70
CR OR **407**	× **4**		-N70
CR OR **408**	× **4**		-N70
CR OR **409**	× **4**		-N70
CR OR **410**	× **4**		-N70
CR OR **411**	× **4**		-N70
CR OR **412**	× **4**		-N70
CR OR **413**	× **4**		-N70
CR OR **414**	× **4**		-N70
CR OR **415**	× **4**		-N70
CR OR **416**	× **4**		-N70
CR OR **417**	× **4**		-N70
CR OR **418**	× **4**		-N70
CR OR **419**	× **4**		-N70
CR OR **420**	× **4**		-N70
CR OR **421**	× **4**		-N70
CR OR **422**	× **4**		-N70
CR OR **423**	× **4**		-N70
CR OR **424**	× **4**		-N70
CR OR **425**	× **4**		-N70
CR OR **426**	× **4**		-N70
CR OR **427**	× **4**		-N70
CR OR **428**	× **4**		-N70
CR OR **429**	× **4**		-N70
CR OR **430**	× **4**		-N70
CR OR **431**	× **4**		-N70
CR OR **432**	× **4**		-N70
CR OR **433**	× **4**		-N70
CR OR **434**	× **4**		-N70
CR OR **435**	× **4**		-N70
CR OR **436**	× **4**		-N70
CR OR **437**	× **4**		-N70
CR OR **438**	× **4**		-N70
CR OR **439**	× **4**		-N70
CR OR **440**	× **4**		-N70
CR OR **441**	× **4**		-N70
CR OR **442**	× **4**		-N70
CR OR **443**	× **4**		-N70
CR OR **444**	× **4**		-N70
CR OR **445**	× **4**		-N70
CR OR **446**	× **4**		-N70
CR OR **447**	× **4**		-N70
CR OR **448**	× **4**		-N70
CR OR **449**	× **4**		-N70

Designation	d_1	d_2	
–	mm		–
CR OR **450**	× **4**		-N70
CR OR **451**	× **4**		-N70
CR OR **452**	× **4**		-N70
CR OR **453**	× **4**		-N70
CR OR **454**	× **4**		-N70
CR OR **455**	× **4**		-N70
CR OR **456**	× **4**		-N70
CR OR **457**	× **4**		-N70
CR OR **458**	× **4**		-N70
CR OR **459**	× **4**		-N70
CR OR **460**	× **4**		-N70
CR OR **461**	× **4**		-N70
CR OR **462**	× **4**		-N70
CR OR **463**	× **4**		-N70
CR OR **464**	× **4**		-N70
CR OR **465**	× **4**		-N70
CR OR **466**	× **4**		-N70
CR OR **467**	× **4**		-N70
CR OR **468**	× **4**		-N70
CR OR **469**	× **4**		-N70
CR OR **470**	× **4**		-N70
CR OR **471**	× **4**		-N70
CR OR **472**	× **4**		-N70
CR OR **473**	× **4**		-N70
CR OR **474**	× **4**		-N70
CR OR **475**	× **4**		-N70
CR OR **476**	× **4**		-N70
CR OR **477**	× **4**		-N70
CR OR **478**	× **4**		-N70
CR OR **479**	× **4**		-N70
CR OR **480**	× **4**		-N70
CR OR **481**	× **4**		-N70
CR OR **482**	× **4**		-N70
CR OR **483**	× **4**		-N70
CR OR **484**	× **4**		-N70
CR OR **485**	× **4**		-N70
CR OR **486**	× **4**		-N70
CR OR **487**	× **4**		-N70
CR OR **488**	× **4**		-N70
CR OR **489**	× **4**		-N70
CR OR **490**	× **4**		-N70
CR OR **491**	× **4**		-N70
CR OR **492**	× **4**		-N70
CR OR **493**	× **4**		-N70
CR OR **494**	× **4**		-N70
CR OR **495**	× **4**		-N70
CR OR **496**	× **4**		-N70
CR OR **497**	× **4**		-N70
CR OR **498**	× **4**		-N70
CR OR **499**	× **4**		-N70

Designation	d_1	d_2	
–	mm		–
CR OR **500**	× **4**		-N70
CR OR **6**	× **4.5**		-N70
CR OR **8**	× **4.5**		-N70
CR OR **9**	× **4.5**		-N70
CR OR **9.5**	× **4.5**		-N70
CR OR **10**	× **4.5**		-N70
CR OR **10.5**	× **4.5**		-N70
CR OR **11**	× **4.5**		-N70
CR OR **12**	× **4.5**		-N70
CR OR **13**	× **4.5**		-N70
CR OR **15**	× **4.5**		-N70
CR OR **15.5**	× **4.5**		-N70
CR OR **16**	× **4.5**		-N70
CR OR **17**	× **4.5**		-N70
CR OR **18**	× **4.5**		-N70
CR OR **19**	× **4.5**		-N70
CR OR **20**	× **4.5**		-N70
CR OR **21**	× **4.5**		-N70
CR OR **21.5**	× **4.5**		-N70
CR OR **22**	× **4.5**		-N70
CR OR **22.5**	× **4.5**		-N70
CR OR **23**	× **4.5**		-N70
CR OR **24**	× **4.5**		-N70
CR OR **24.5**	× **4.5**		-N70
CR OR **25**	× **4.5**		-N70
CR OR **26**	× **4.5**		-N70
CR OR **27**	× **4.5**		-N70
CR OR **27.5**	× **4.5**		-N70
CR OR **28**	× **4.5**		-N70
CR OR **28.5**	× **4.5**		-N70
CR OR **29**	× **4.5**		-N70
CR OR **29.5**	× **4.5**		-N70
CR OR **30**	× **4.5**		-N70
CR OR **31**	× **4.5**		-N70
CR OR **31.5**	× **4.5**		-N70
CR OR **32**	× **4.5**		-N70
CR OR **33**	× **4.5**		-N70
CR OR **34**	× **4.5**		-N70
CR OR **34.5**	× **4.5**		-N70
CR OR **35**	× **4.5**		-N70
CR OR **35.5**	× **4.5**		-N70
CR OR **36**	× **4.5**		-N70
CR OR **37**	× **4.5**		-N70
CR OR **37.5**	× **4.5**		-N70
CR OR **38**	× **4.5**		-N70
CR OR **39**	× **4.5**		-N70
CR OR **40**	× **4.5**		-N70
CR OR **40.5**	× **4.5**		-N70
CR OR **41**	× **4.5**		-N70
CR OR **42**	× **4.5**		-N70

We normally stock O-rings of nitrile rubber (N) 70° IRH. Alternative hardnesses or materials, e.g. fluorocarbon rubber (FPM) or silicone rubber (Q) can also be delivered. Contact us for information about materials.

rgab.ru Берг АБ bergab@ya.ru Тел. (495)-228-06-21, факс (495) 2

rgab.ru Берг АБ bergab@ya.ru Тел. (495)-228-06-21, факс (495) 2

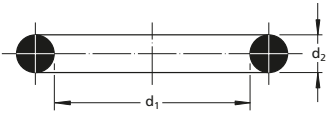

Designation	d_1		d_2	
–	mm			–
CR OR	**43**	×	**4.5**	-N70
CR OR	**44**	×	**4.5**	-N70
CR OR	**45**	×	**4.5**	-N70
CR OR	**46**	×	**4.5**	-N70
CR OR	**47**	×	**4.5**	-N70
CR OR	**48**	×	**4.5**	-N70
CR OR	**49**	×	**4.5**	-N70
CR OR	**50**	×	**4.5**	-N70
CR OR	**51**	×	**4.5**	-N70
CR OR	**53**	×	**4.5**	-N70
CR OR	**56**	×	**4.5**	-N70
CR OR	**57**	×	**4.5**	-N70
CR OR	**60**	×	**4.5**	-N70
CR OR	**61**	×	**4.5**	-N70
CR OR	**63**	×	**4.5**	-N70
CR OR	**64**	×	**4.5**	-N70
CR OR	**65**	×	**4.5**	-N70
CR OR	**66**	×	**4.5**	-N70
CR OR	**68**	×	**4.5**	-N70
CR OR	**69**	×	**4.5**	-N70
CR OR	**70**	×	**4.5**	-N70
CR OR	**71**	×	**4.5**	-N70
CR OR	**73**	×	**4.5**	-N70
CR OR	**74**	×	**4.5**	-N70
CR OR	**75**	×	**4.5**	-N70
CR OR	**76**	×	**4.5**	-N70
CR OR	**80**	×	**4.5**	-N70
CR OR	**81**	×	**4.5**	-N70
CR OR	**83**	×	**4.5**	-N70
CR OR	**85**	×	**4.5**	-N70
CR OR	**86**	×	**4.5**	-N70
CR OR	**89**	×	**4.5**	-N70
CR OR	**90**	×	**4.5**	-N70
CR OR	**92**	×	**4.5**	-N70
CR OR	**93.5**	×	**4.5**	-N70
CR OR	**95**	×	**4.5**	-N70
CR OR	**97.5**	×	**4.5**	-N70
CR OR	**98**	×	**4.5**	-N70
CR OR	**99.5**	×	**4.5**	-N70
CR OR	**100**	×	**4.5**	-N70
CR OR	**100.5**	×	**4.5**	-N70
CR OR	**101**	×	**4.5**	-N70
CR OR	**103.5**	×	**4.5**	-N70
CR OR	**105**	×	**4.5**	-N70
CR OR	**106**	×	**4.5**	-N70
CR OR	**110**	×	**4.5**	-N70
CR OR	**115**	×	**4.5**	-N70
CR OR	**118**	×	**4.5**	-N70
CR OR	**120**	×	**4.5**	-N70
CR OR	**122**	×	**4.5**	-N70

Designation	d_1		d_2	
–	mm			–
CR OR	**124**	×	**4.5**	-N70
CR OR	**126**	×	**4.5**	-N70
CR OR	**128**	×	**4.5**	-N70
CR OR	**130**	×	**4.5**	-N70
CR OR	**131.5**	×	**4.5**	-N70
CR OR	**134.5**	×	**4.5**	-N70
CR OR	**137**	×	**4.5**	-N70
CR OR	**140**	×	**4.5**	-N70
CR OR	**140.5**	×	**4.5**	-N70
CR OR	**150**	×	**4.5**	-N70
CR OR	**153**	×	**4.5**	-N70
CR OR	**155**	×	**4.5**	-N70
CR OR	**157**	×	**4.5**	-N70
CR OR	**160**	×	**4.5**	-N70
CR OR	**165**	×	**4.5**	-N70
CR OR	**172**	×	**4.5**	-N70
CR OR	**178**	×	**4.5**	-N70
CR OR	**180**	×	**4.5**	-N70
CR OR	**185**	×	**4.5**	-N70
CR OR	**186**	×	**4.5**	-N70
CR OR	**189.5**	×	**4.5**	-N70
CR OR	**192**	×	**4.5**	-N70
CR OR	**208**	×	**4.5**	-N70
CR OR	**215**	×	**4.5**	-N70
CR OR	**218.5**	×	**4.5**	-N70
CR OR	**225**	×	**4.5**	-N70
CR OR	**227**	×	**4.5**	-N70
CR OR	**250**	×	**4.5**	-N70
CR OR	**267**	×	**4.5**	-N70
CR OR	**280**	×	**4.5**	-N70
CR OR	**315**	×	**4.5**	-N70
CR OR	**4**	×	**5**	-N70
CR OR	**5**	×	**5**	-N70
CR OR	**6**	×	**5**	-N70
CR OR	**7**	×	**5**	-N70
CR OR	**8**	×	**5**	-N70
CR OR	**9**	×	**5**	-N70
CR OR	**10**	×	**5**	-N70
CR OR	**11**	×	**5**	-N70
CR OR	**12**	×	**5**	-N70
CR OR	**13**	×	**5**	-N70
CR OR	**14**	×	**5**	-N70
CR OR	**15**	×	**5**	-N70
CR OR	**16**	×	**5**	-N70
CR OR	**17**	×	**5**	-N70
CR OR	**18**	×	**5**	-N70
CR OR	**19**	×	**5**	-N70
CR OR	**20**	×	**5**	-N70
CR OR	**21**	×	**5**	-N70
CR OR	**22**	×	**5**	-N70

Designation	d_1		d_2	
–	mm			–
CR OR	**23**	×	**5**	-N70
CR OR	**24**	×	**5**	-N70
CR OR	**25**	×	**5**	-N70
CR OR	**26**	×	**5**	-N70
CR OR	**27**	×	**5**	-N70
CR OR	**28**	×	**5**	-N70
CR OR	**29**	×	**5**	-N70
CR OR	**30**	×	**5**	-N70
CR OR	**31**	×	**5**	-N70
CR OR	**32**	×	**5**	-N70
CR OR	**33**	×	**5**	-N70
CR OR	**34**	×	**5**	-N70
CR OR	**35**	×	**5**	-N70
CR OR	**36**	×	**5**	-N70
CR OR	**37**	×	**5**	-N70
CR OR	**38**	×	**5**	-N70
CR OR	**39**	×	**5**	-N70
CR OR	**40**	×	**5**	-N70
CR OR	**41**	×	**5**	-N70
CR OR	**42**	×	**5**	-N70
CR OR	**43**	×	**5**	-N70
CR OR	**44**	×	**5**	-N70
CR OR	**45**	×	**5**	-N70
CR OR	**46**	×	**5**	-N70
CR OR	**47**	×	**5**	-N70
CR OR	**48**	×	**5**	-N70
CR OR	**49**	×	**5**	-N70
CR OR	**50**	×	**5**	-N70
CR OR	**51**	×	**5**	-N70
CR OR	**52**	×	**5**	-N70
CR OR	**53**	×	**5**	-N70
CR OR	**54**	×	**5**	-N70
CR OR	**55**	×	**5**	-N70
CR OR	**56**	×	**5**	-N70
CR OR	**57**	×	**5**	-N70
CR OR	**58**	×	**5**	-N70
CR OR	**59**	×	**5**	-N70
CR OR	**60**	×	**5**	-N70
CR OR	**61**	×	**5**	-N70
CR OR	**62**	×	**5**	-N70
CR OR	**63**	×	**5**	-N70
CR OR	**64**	×	**5**	-N70
CR OR	**65**	×	**5**	-N70
CR OR	**66**	×	**5**	-N70
CR OR	**67**	×	**5**	-N70
CR OR	**68**	×	**5**	-N70
CR OR	**69**	×	**5**	-N70
CR OR	**70**	×	**5**	-N70
CR OR	**71**	×	**5**	-N70
CR OR	**72**	×	**5**	-N70

We normally stock O-rings of nitrile rubber (N) 70° IRH. Alternative hardnesses or materials, e.g. fluorocarbon rubber (FPM) or silicone rubber (Q) can also be delivered. Contact us for information about materials.

rgab.ru Берг АБ bergab@ya.ru Тел. (495)-228-06-21, факс (495) 2

rgab.ru Берг АБ bergab@ya.ru Тел. (495)-228-06-21, факс (495) 2

Designation											
	d_1		d_2			d_1		d_2			d_1		d_2	
–	mm			–	–	mm			–	–	mm			–
CR OR	**73**	×	**5**	-N70	CR OR	**123**	×	**5**	-N70	CR OR	**173**	×	**5**	-N70
CR OR	**74**	×	**5**	-N70	CR OR	**124**	×	**5**	-N70	CR OR	**174**	×	**5**	-N70
CR OR	**75**	×	**5**	-N70	CR OR	**125**	×	**5**	-N70	CR OR	**175**	×	**5**	-N70
CR OR	**76**	×	**5**	-N70	CR OR	**126**	×	**5**	-N70	CR OR	**176**	×	**5**	-N70
CR OR	**77**	×	**5**	-N70	CR OR	**127**	×	**5**	-N70	CR OR	**177**	×	**5**	-N70
CR OR	**78**	×	**5**	-N70	CR OR	**128**	×	**5**	-N70	CR OR	**178**	×	**5**	-N70
CR OR	**79**	×	**5**	-N70	CR OR	**129**	×	**5**	-N70	CR OR	**179**	×	**5**	-N70
CR OR	**80**	×	**5**	-N70	CR OR	**130**	×	**5**	-N70	CR OR	**180**	×	**5**	-N70
CR OR	**81**	×	**5**	-N70	CR OR	**131**	×	**5**	-N70	CR OR	**181**	×	**5**	-N70
CR OR	**82**	×	**5**	-N70	CR OR	**132**	×	**5**	-N70	CR OR	**182**	×	**5**	-N70
CR OR	**83**	×	**5**	-N70	CR OR	**133**	×	**5**	-N70	CR OR	**183**	×	**5**	-N70
CR OR	**84**	×	**5**	-N70	CR OR	**134**	×	**5**	-N70	CR OR	**184**	×	**5**	-N70
CR OR	**85**	×	**5**	-N70	CR OR	**135**	×	**5**	-N70	CR OR	**185**	×	**5**	-N70
CR OR	**86**	×	**5**	-N70	CR OR	**136**	×	**5**	-N70	CR OR	**186**	×	**5**	-N70
CR OR	**87**	×	**5**	-N70	CR OR	**137**	×	**5**	-N70	CR OR	**187**	×	**5**	-N70
CR OR	**88**	×	**5**	-N70	CR OR	**138**	×	**5**	-N70	CR OR	**188**	×	**5**	-N70
CR OR	**89**	×	**5**	-N70	CR OR	**139**	×	**5**	-N70	CR OR	**189**	×	**5**	-N70
CR OR	**90**	×	**5**	-N70	CR OR	**140**	×	**5**	-N70	CR OR	**190**	×	**5**	-N70
CR OR	**91**	×	**5**	-N70	CR OR	**141**	×	**5**	-N70	CR OR	**191**	×	**5**	-N70
CR OR	**92**	×	**5**	-N70	CR OR	**142**	×	**5**	-N70	CR OR	**192**	×	**5**	-N70
CR OR	**93**	×	**5**	-N70	CR OR	**143**	×	**5**	-N70	CR OR	**193**	×	**5**	-N70
CR OR	**94**	×	**5**	-N70	CR OR	**144**	×	**5**	-N70	CR OR	**194**	×	**5**	-N70
CR OR	**95**	×	**5**	-N70	CR OR	**145**	×	**5**	-N70	CR OR	**195**	×	**5**	-N70
CR OR	**96**	×	**5**	-N70	CR OR	**146**	×	**5**	-N70	CR OR	**196**	×	**5**	-N70
CR OR	**97**	×	**5**	-N70	CR OR	**147**	×	**5**	-N70	CR OR	**197**	×	**5**	-N70
CR OR	**98**	×	**5**	-N70	CR OR	**148**	×	**5**	-N70	CR OR	**198**	×	**5**	-N70
CR OR	**99**	×	**5**	-N70	CR OR	**149**	×	**5**	-N70	CR OR	**199**	×	**5**	-N70
CR OR	**100**	×	**5**	-N70	CR OR	**150**	×	**5**	-N70	CR OR	**200**	×	**5**	-N70
CR OR	**101**	×	**5**	-N70	CR OR	**151**	×	**5**	-N70	CR OR	**201**	×	**5**	-N70
CR OR	**102**	×	**5**	-N70	CR OR	**152**	×	**5**	-N70	CR OR	**202**	×	**5**	-N70
CR OR	**103**	×	**5**	-N70	CR OR	**153**	×	**5**	-N70	CR OR	**203**	×	**5**	-N70
CR OR	**104**	×	**5**	-N70	CR OR	**154**	×	**5**	-N70	CR OR	**204**	×	**5**	-N70
CR OR	**105**	×	**5**	-N70	CR OR	**155**	×	**5**	-N70	CR OR	**205**	×	**5**	-N70
CR OR	**106**	×	**5**	-N70	CR OR	**156**	×	**5**	-N70	CR OR	**206**	×	**5**	-N70
CR OR	**107**	×	**5**	-N70	CR OR	**157**	×	**5**	-N70	CR OR	**207**	×	**5**	-N70
CR OR	**108**	×	**5**	-N70	CR OR	**158**	×	**5**	-N70	CR OR	**208**	×	**5**	-N70
CR OR	**109**	×	**5**	-N70	CR OR	**159**	×	**5**	-N70	CR OR	**209**	×	**5**	-N70
CR OR	**110**	×	**5**	-N70	CR OR	**160**	×	**5**	-N70	CR OR	**210**	×	**5**	-N70
CR OR	**111**	×	**5**	-N70	CR OR	**161**	×	**5**	-N70	CR OR	**211**	×	**5**	-N70
CR OR	**112**	×	**5**	-N70	CR OR	**162**	×	**5**	-N70	CR OR	**212**	×	**5**	-N70
CR OR	**113**	×	**5**	-N70	CR OR	**163**	×	**5**	-N70	CR OR	**213**	×	**5**	-N70
CR OR	**114**	×	**5**	-N70	CR OR	**164**	×	**5**	-N70	CR OR	**214**	×	**5**	-N70
CR OR	**115**	×	**5**	-N70	CR OR	**165**	×	**5**	-N70	CR OR	**215**	×	**5**	-N70
CR OR	**116**	×	**5**	-N70	CR OR	**166**	×	**5**	-N70	CR OR	**216**	×	**5**	-N70
CR OR	**117**	×	**5**	-N70	CR OR	**167**	×	**5**	-N70	CR OR	**217**	×	**5**	-N70
CR OR	**118**	×	**5**	-N70	CR OR	**168**	×	**5**	-N70	CR OR	**218**	×	**5**	-N70
CR OR	**119**	×	**5**	-N70	CR OR	**169**	×	**5**	-N70	CR OR	**219**	×	**5**	-N70
CR OR	**120**	×	**5**	-N70	CR OR	**170**	×	**5**	-N70	CR OR	**220**	×	**5**	-N70
CR OR	**121**	×	**5**	-N70	CR OR	**171**	×	**5**	-N70	CR OR	**221**	×	**5**	-N70
CR OR	**122**	×	**5**	-N70	CR OR	**172**	×	**5**	-N70	CR OR	**222**	×	**5**	-N70

We normally stock O-rings of nitrile rubber (N) 70° IRH. Alternative hardnesses or materials, e.g. fluorocarbon rubber (FPM) or silicone rubber (Q) can also be delivered. Contact us for information about materials.

rgab.ru Берг АБ bergab@ya.ru Тел. (495)-228-06-21, факс (495) 2

rgab.ru Берг АБ bergab@ya.ru Тел. (495)-228-06-21, факс (495) 2

d_2 5 – 5,33 mm

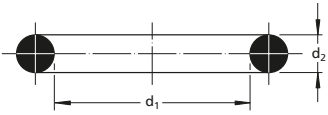

Designation	d_1		d_2	
–	mm			–
CR OR **223**	×	**5**		-N70
CR OR **224**	×	**5**		-N70
CR OR **225**	×	**5**		-N70
CR OR **226**	×	**5**		-N70
CR OR **227**	×	**5**		-N70
CR OR **228**	×	**5**		-N70
CR OR **229**	×	**5**		-N70
CR OR **230**	×	**5**		-N70
CR OR **231**	×	**5**		-N70
CR OR **232**	×	**5**		-N70
CR OR **233**	×	**5**		-N70
CR OR **234**	×	**5**		-N70
CR OR **235**	×	**5**		-N70
CR OR **236**	×	**5**		-N70
CR OR **237**	×	**5**		-N70
CR OR **238**	×	**5**		-N70
CR OR **239**	×	**5**		-N70
CR OR **240**	×	**5**		-N70
CR OR **241**	×	**5**		-N70
CR OR **242**	×	**5**		-N70
CR OR **243**	×	**5**		-N70
CR OR **244**	×	**5**		-N70
CR OR **245**	×	**5**		-N70
CR OR **246**	×	**5**		-N70
CR OR **247**	×	**5**		-N70
CR OR **248**	×	**5**		-N70
CR OR **249**	×	**5**		-N70
CR OR **250**	×	**5**		-N70
CR OR **251**	×	**5**		-N70
CR OR **252**	×	**5**		-N70
CR OR **253**	×	**5**		-N70
CR OR **254**	×	**5**		-N70
CR OR **255**	×	**5**		-N70
CR OR **256**	×	**5**		-N70
CR OR **257**	×	**5**		-N70
CR OR **258**	×	**5**		-N70
CR OR **259**	×	**5**		-N70
CR OR **260**	×	**5**		-N70
CR OR **261**	×	**5**		-N70
CR OR **262**	×	**5**		-N70
CR OR **263**	×	**5**		-N70
CR OR **264**	×	**5**		-N70
CR OR **265**	×	**5**		-N70
CR OR **266**	×	**5**		-N70
CR OR **267**	×	**5**		-N70
CR OR **268**	×	**5**		-N70
CR OR **269**	×	**5**		-N70
CR OR **270**	×	**5**		-N70
CR OR **271**	×	**5**		-N70
CR OR **272**	×	**5**		-N70

Designation	d_1		d_2	
–	mm			–
CR OR **273**	×	**5**		-N70
CR OR **274**	×	**5**		-N70
CR OR **275**	×	**5**		-N70
CR OR **276**	×	**5**		-N70
CR OR **277**	×	**5**		-N70
CR OR **278**	×	**5**		-N70
CR OR **279**	×	**5**		-N70
CR OR **280**	×	**5**		-N70
CR OR **281**	×	**5**		-N70
CR OR **282**	×	**5**		-N70
CR OR **283**	×	**5**		-N70
CR OR **284**	×	**5**		-N70
CR OR **285**	×	**5**		-N70
CR OR **286**	×	**5**		-N70
CR OR **287**	×	**5**		-N70
CR OR **288**	×	**5**		-N70
CR OR **289**	×	**5**		-N70
CR OR **290**	×	**5**		-N70
CR OR **291**	×	**5**		-N70
CR OR **292**	×	**5**		-N70
CR OR **293**	×	**5**		-N70
CR OR **294**	×	**5**		-N70
CR OR **295**	×	**5**		-N70
CR OR **296**	×	**5**		-N70
CR OR **297**	×	**5**		-N70
CR OR **298**	×	**5**		-N70
CR OR **299**	×	**5**		-N70
CR OR **300**	×	**5**		-N70
CR OR **301**	×	**5**		-N70
CR OR **302**	×	**5**		-N70
CR OR **303**	×	**5**		-N70
CR OR **304**	×	**5**		-N70
CR OR **305**	×	**5**		-N70
CR OR **306**	×	**5**		-N70
CR OR **307**	×	**5**		-N70
CR OR **308**	×	**5**		-N70
CR OR **309**	×	**5**		-N70
CR OR **310**	×	**5**		-N70
CR OR **311**	×	**5**		-N70
CR OR **312**	×	**5**		-N70
CR OR **313**	×	**5**		-N70
CR OR **314**	×	**5**		-N70
CR OR **315**	×	**5**		-N70
CR OR **316**	×	**5**		-N70
CR OR **317**	×	**5**		-N70
CR OR **318**	×	**5**		-N70
CR OR **319**	×	**5**		-N70
CR OR **320**	×	**5**		-N70
CR OR **321**	×	**5**		-N70
CR OR **322**	×	**5**		-N70

Designation	d_1		d_2	
–	mm			–
CR OR **323**	×	**5**		-N70
CR OR **324**	×	**5**		-N70
CR OR **325**	×	**5**		-N70
CR OR **326**	×	**5**		-N70
CR OR **327**	×	**5**		-N70
CR OR **328**	×	**5**		-N70
CR OR **329**	×	**5**		-N70
CR OR **330**	×	**5**		-N70
CR OR **331**	×	**5**		-N70
CR OR **332**	×	**5**		-N70
CR OR **333**	×	**5**		-N70
CR OR **334**	×	**5**		-N70
CR OR **335**	×	**5**		-N70
CR OR **336**	×	**5**		-N70
CR OR **337**	×	**5**		-N70
CR OR **338**	×	**5**		-N70
CR OR **339**	×	**5**		-N70
CR OR **340**	×	**5**		-N70
CR OR **341**	×	**5**		-N70
CR OR **342**	×	**5**		-N70
CR OR **343**	×	**5**		-N70
CR OR **344**	×	**5**		-N70
CR OR **345**	×	**5**		-N70
CR OR **346**	×	**5**		-N70
CR OR **347**	×	**5**		-N70
CR OR **348**	×	**5**		-N70
CR OR **349**	×	**5**		-N70
CR OR **350**	×	**5**		-N70
CR OR **351**	×	**5**		-N70
CR OR **352**	×	**5**		-N70
CR OR **353**	×	**5**		-N70
CR OR **354**	×	**5**		-N70
CR OR **355**	×	**5**		-N70
CR OR **356**	×	**5**		-N70
CR OR **357**	×	**5**		-N70
CR OR **358**	×	**5**		-N70
CR OR **359**	×	**5**		-N70
CR OR **360**	×	**5**		-N70
CR OR **361**	×	**5**		-N70
CR OR **362**	×	**5**		-N70
CR OR **363**	×	**5**		-N70
CR OR **364**	×	**5**		-N70
CR OR **365**	×	**5**		-N70
CR OR **366**	×	**5**		-N70
CR OR **367**	×	**5**		-N70
CR OR **368**	×	**5**		-N70
CR OR **369**	×	**5**		-N70
CR OR **370**	×	**5**		-N70
CR OR **371**	×	**5**		-N70
CR OR **372**	×	**5**		-N70

We normally stock O-rings of nitrile rubber (N) 70° IRH. Alternative hardnesses or materials, e.g. fluorocarbon rubber (FPM) or silicone rubber (Q) can also be delivered. Contact us for information about materials.

rgab.ru Берг АБ bergab@ya.ru Тел. (495)-228-06-21, факс (495) 2

rgab.ru Берг АБ bergab@ya.ru Тел. (495)-228-06-21, факс (495) 2

Designation	d_1		d_2	
–	mm			–
CR OR	**373**	×	**5**	-N70
CR OR	**374**	×	**5**	-N70
CR OR	**375**	×	**5**	-N70
CR OR	**376**	×	**5**	-N70
CR OR	**377**	×	**5**	-N70
CR OR	**378**	×	**5**	-N70
CR OR	**379**	×	**5**	-N70
CR OR	**380**	×	**5**	-N70
CR OR	**381**	×	**5**	-N70
CR OR	**382**	×	**5**	-N70
CR OR	**383**	×	**5**	-N70
CR OR	**384**	×	**5**	-N70
CR OR	**385**	×	**5**	-N70
CR OR	**386**	×	**5**	-N70
CR OR	**387**	×	**5**	-N70
CR OR	**388**	×	**5**	-N70
CR OR	**389**	×	**5**	-N70
CR OR	**390**	×	**5**	-N70
CR OR	**391**	×	**5**	-N70
CR OR	**392**	×	**5**	-N70
CR OR	**393**	×	**5**	-N70
CR OR	**394**	×	**5**	-N70
CR OR	**395**	×	**5**	-N70
CR OR	**396**	×	**5**	-N70
CR OR	**397**	×	**5**	-N70
CR OR	**398**	×	**5**	-N70
CR OR	**399**	×	**5**	-N70
CR OR	**400**	×	**5**	-N70
CR OR	**40**	×	**5.3**	-N70
CR OR	**41.2**	×	**5.3**	-N70
CR OR	**41.4**	×	**5.3**	-N70
CR OR	**42.5**	×	**5.3**	-N70
CR OR	**43.7**	×	**5.3**	-N70
CR OR	**45**	×	**5.3**	-N70
CR OR	**46.2**	×	**5.3**	-N70
CR OR	**47.5**	×	**5.3**	-N70
CR OR	**48.7**	×	**5.3**	-N70
CR OR	**50**	×	**5.3**	-N70
CR OR	**51.5**	×	**5.3**	-N70
CR OR	**53**	×	**5.3**	-N70
CR OR	**54.4**	×	**5.3**	-N70
CR OR	**54.5**	×	**5.3**	-N70
CR OR	**56**	×	**5.3**	-N70
CR OR	**58**	×	**5.3**	-N70
CR OR	**60**	×	**5.3**	-N70
CR OR	**61.5**	×	**5.3**	-N70
CR OR	**63**	×	**5.3**	-N70
CR OR	**65**	×	**5.3**	-N70
CR OR	**67**	×	**5.3**	-N70
CR OR	**69**	×	**5.3**	-N70

Designation	d_1		d_2	
–	mm			–
CR OR	**71**	×	**5.3**	-N70
CR OR	**73**	×	**5.3**	-N70
CR OR	**75**	×	**5.3**	-N70
CR OR	**77.5**	×	**5.3**	-N70
CR OR	**80**	×	**5.3**	-N70
CR OR	**82.5**	×	**5.3**	-N70
CR OR	**85**	×	**5.3**	-N70
CR OR	**87.5**	×	**5.3**	-N70
CR OR	**90**	×	**5.3**	-N70
CR OR	**92.5**	×	**5.3**	-N70
CR OR	**95**	×	**5.3**	-N70
CR OR	**97.5**	×	**5.3**	-N70
CR OR	**100**	×	**5.3**	-N70
CR OR	**103**	×	**5.3**	-N70
CR OR	**106**	×	**5.3**	-N70
CR OR	**109**	×	**5.3**	-N70
CR OR	**112**	×	**5.3**	-N70
CR OR	**115**	×	**5.3**	-N70
CR OR	**118**	×	**5.3**	-N70
CR OR	**122**	×	**5.3**	-N70
CR OR	**125**	×	**5.3**	-N70
CR OR	**128**	×	**5.3**	-N70
CR OR	**132**	×	**5.3**	-N70
CR OR	**136**	×	**5.3**	-N70
CR OR	**140**	×	**5.3**	-N70
CR OR	**145**	×	**5.3**	-N70
CR OR	**150**	×	**5.3**	-N70
CR OR	**155**	×	**5.3**	-N70
CR OR	**160**	×	**5.3**	-N70
CR OR	**165**	×	**5.3**	-N70
CR OR	**170**	×	**5.3**	-N70
CR OR	**175**	×	**5.3**	-N70
CR OR	**180**	×	**5.3**	-N70
CR OR	**185**	×	**5.3**	-N70
CR OR	**190**	×	**5.3**	-N70
CR OR	**195**	×	**5.3**	-N70
CR OR	**200**	×	**5.3**	-N70
CR OR	**10.46**	×	**5.33**	-N70
CR OR	**12.07**	×	**5.33**	-N70
CR OR	**13.64**	×	**5.33**	-N70
CR OR	**15.24**	×	**5.33**	-N70
CR OR	**16.81**	×	**5.33**	-N70
CR OR	**18.42**	×	**5.33**	-N70
CR OR	**19.99**	×	**5.33**	-N70
CR OR	**21.59**	×	**5.33**	-N70
CR OR	**23.16**	×	**5.33**	-N70
CR OR	**24.77**	×	**5.33**	-N70
CR OR	**26.34**	×	**5.33**	-N70
CR OR	**27.94**	×	**5.33**	-N70
CR OR	**29.51**	×	**5.33**	-N70

Designation	d_1		d_2	
–	mm			–
CR OR	**31.12**	×	**5.33**	-N70
CR OR	**32.69**	×	**5.33**	-N70
CR OR	**34.29**	×	**5.33**	-N70
CR OR	**37.47**	×	**5.33**	-N70
CR OR	**40.64**	×	**5.33**	-N70
CR OR	**43.82**	×	**5.33**	-N70
CR OR	**46.99**	×	**5.33**	-N70
CR OR	**50.17**	×	**5.33**	-N70
CR OR	**53.34**	×	**5.33**	-N70
CR OR	**56.52**	×	**5.33**	-N70
CR OR	**59.69**	×	**5.33**	-N70
CR OR	**62.87**	×	**5.33**	-N70
CR OR	**66.04**	×	**5.33**	-N70
CR OR	**69.22**	×	**5.33**	-N70
CR OR	**72.39**	×	**5.33**	-N70
CR OR	**74.63**	×	**5.33**	-N70
CR OR	**75.57**	×	**5.33**	-N70
CR OR	**78.74**	×	**5.33**	-N70
CR OR	**79.73**	×	**5.33**	-N70
CR OR	**81.92**	×	**5.33**	-N70
CR OR	**85.09**	×	**5.33**	-N70
CR OR	**88.27**	×	**5.33**	-N70
CR OR	**89.69**	×	**5.33**	-N70
CR OR	**91.44**	×	**5.33**	-N70
CR OR	**94.62**	×	**5.33**	-N70
CR OR	**97.79**	×	**5.33**	-N70
CR OR	**100**	×	**5.33**	-N70
CR OR	**100.97**	×	**5.33**	-N70
CR OR	**104.14**	×	**5.33**	-N70
CR OR	**107.32**	×	**5.33**	-N70
CR OR	**109.54**	×	**5.33**	-N70
CR OR	**110.49**	×	**5.33**	-N70
CR OR	**113.67**	×	**5.33**	-N70
CR OR	**116.84**	×	**5.33**	-N70
CR OR	**117.48**	×	**5.33**	-N70
CR OR	**120.02**	×	**5.33**	-N70
CR OR	**120.65**	×	**5.33**	-N70
CR OR	**123.19**	×	**5.33**	-N70
CR OR	**123.83**	×	**5.33**	-N70
CR OR	**126.37**	×	**5.33**	-N70
CR OR	**127**	×	**5.33**	-N70
CR OR	**129.54**	×	**5.33**	-N70
CR OR	**130.18**	×	**5.33**	-N70
CR OR	**132.72**	×	**5.33**	-N70
CR OR	**133.35**	×	**5.33**	-N70
CR OR	**135.89**	×	**5.33**	-N70
CR OR	**136.53**	×	**5.33**	-N70
CR OR	**139.07**	×	**5.33**	-N70
CR OR	**139.7**	×	**5.33**	-N70
CR OR	**142.24**	×	**5.33**	-N70

We normally stock O-rings of nitrile rubber (N) 70° IRH. Alternative hardnesses or materials, e.g. fluorocarbon rubber (FPM) or silicone rubber (Q) can also be delivered. Contact us for information about materials.

rgab.ru Берг АБ bergab@ya.ru Тел. (495)-228-06-21, факс (495) 2

rgab.ru Берг АБ bergab@ya.ru Тел. (495)-228-06-21, факс (495) 2

O-rings
d_2 5,33 – 6 mm

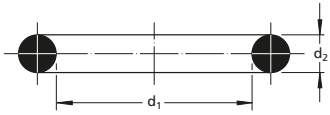

Designation											
	d_1		d_2			d_1		d_2			d_1		d_2	
–	mm			–	–	mm			–	–	mm			–
CR OR	**142.88**	×	**5.33**	-N70	CR OR	**52.3**	×	**5.7**	-N70	CR OR	**129.3**	×	**5.7**	-N70
CR OR	**145.42**	×	**5.33**	-N70	CR OR	**52.5**	×	**5.7**	-N70	CR OR	**134.3**	×	**5.7**	-N70
CR OR	**146.05**	×	**5.33**	-N70	CR OR	**54.2**	×	**5.7**	-N70	CR OR	**139.3**	×	**5.7**	-N70
CR OR	**148.59**	×	**5.33**	-N70	CR OR	**54.3**	×	**5.7**	-N70	CR OR	**144.3**	×	**5.7**	-N70
CR OR	**149.23**	×	**5.33**	-N70	CR OR	**55.3**	×	**5.7**	-N70	CR OR	**149.3**	×	**5.7**	-N70
CR OR	**151.77**	×	**5.33**	-N70	CR OR	**57.2**	×	**5.7**	-N70	CR OR	**154.3**	×	**5.7**	-N70
CR OR	**155**	×	**5.33**	-N70	CR OR	**59.2**	×	**5.7**	-N70	CR OR	**159.3**	×	**5.7**	-N70
CR OR	**158.12**	×	**5.33**	-N70	CR OR	**59.3**	×	**5.7**	-N70	CR OR	**164.3**	×	**5.7**	-N70
CR OR	**161.3**	×	**5.33**	-N70	CR OR	**59.7**	×	**5.7**	-N70	CR OR	**169.3**	×	**5.7**	-N70
CR OR	**164.47**	×	**5.33**	-N70	CR OR	**62**	×	**5.7**	-N70	CR OR	**174.3**	×	**5.7**	-N70
CR OR	**167.7**	×	**5.33**	-N70	CR OR	**62.3**	×	**5.7**	-N70	CR OR	**179.3**	×	**5.7**	-N70
CR OR	**170.82**	×	**5.33**	-N70	CR OR	**64**	×	**5.7**	-N70	CR OR	**184.3**	×	**5.7**	-N70
CR OR	**174**	×	**5.33**	-N70	CR OR	**64.2**	×	**5.7**	-N70	CR OR	**189.3**	×	**5.7**	-N70
CR OR	**177.17**	×	**5.33**	-N70	CR OR	**64.3**	×	**5.7**	-N70	CR OR	**194.3**	×	**5.7**	-N70
CR OR	**183.52**	×	**5.33**	-N70	CR OR	**69**	×	**5.7**	-N70	CR OR	**199.3**	×	**5.7**	-N70
CR OR	**189.87**	×	**5.33**	-N70	CR OR	**69.2**	×	**5.7**	-N70	CR OR	**209.3**	×	**5.7**	-N70
CR OR	**196.22**	×	**5.33**	-N70	CR OR	**69.3**	×	**5.7**	-N70	CR OR	**219.3**	×	**5.7**	-N70
CR OR	**202.57**	×	**5.33**	-N70	CR OR	**74**	×	**5.7**	-N70	CR OR	**229.3**	×	**5.7**	-N70
CR OR	**208.92**	×	**5.33**	-N70	CR OR	**74.2**	×	**5.7**	-N70	CR OR	**239.3**	×	**5.7**	-N70
CR OR	**215.27**	×	**5.33**	-N70	CR OR	**74.3**	×	**5.7**	-N70	CR OR	**249.3**	×	**5.7**	-N70
CR OR	**221.62**	×	**5.33**	-N70	CR OR	**77.2**	×	**5.7**	-N70	CR OR	**259.3**	×	**5.7**	-N70
CR OR	**227.97**	×	**5.33**	-N70	CR OR	**79**	×	**5.7**	-N70	CR OR	**269.3**	×	**5.7**	-N70
CR OR	**234.32**	×	**5.33**	-N70	CR OR	**79.2**	×	**5.7**	-N70	CR OR	**279.3**	×	**5.7**	-N70
CR OR	**240.67**	×	**5.33**	-N70	CR OR	**79.3**	×	**5.7**	-N70	CR OR	**289.3**	×	**5.7**	-N70
CR OR	**247.02**	×	**5.33**	-N70	CR OR	**84**	×	**5.7**	-N70	CR OR	**299.3**	×	**5.7**	-N70
CR OR	**253.37**	×	**5.33**	-N70	CR OR	**84.1**	×	**5.7**	-N70	CR OR	**319.3**	×	**5.7**	-N70
CR OR	**266.07**	×	**5.33**	-N70	CR OR	**84.3**	×	**5.7**	-N70	CR OR	**329.3**	×	**5.7**	-N70
CR OR	**278.77**	×	**5.33**	-N70	CR OR	**89**	×	**5.7**	-N70	CR OR	**339.3**	×	**5.7**	-N70
CR OR	**291.47**	×	**5.33**	-N70	CR OR	**89.1**	×	**5.7**	-N70	CR OR	**359.3**	×	**5.7**	-N70
CR OR	**304.17**	×	**5.33**	-N70	CR OR	**89.3**	×	**5.7**	-N70	CR OR	**379.3**	×	**5.7**	-N70
CR OR	**329.57**	×	**5.33**	-N70	CR OR	**94**	×	**5.7**	-N70	CR OR	**399.3**	×	**5.7**	-N70
CR OR	**354.97**	×	**5.33**	-N70	CR OR	**94.1**	×	**5.7**	-N70	CR OR	**419.3**	×	**5.7**	-N70
CR OR	**380.37**	×	**5.33**	-N70	CR OR	**94.3**	×	**5.7**	-N70	CR OR	**439.3**	×	**5.7**	-N70
CR OR	**405.26**	×	**5.33**	-N70	CR OR	**99**	×	**5.7**	-N70	CR OR	**459.3**	×	**5.7**	-N70
CR OR	**430.66**	×	**5.33**	-N70	CR OR	**99.1**	×	**5.7**	-N70	CR OR	**479.3**	×	**5.7**	-N70
CR OR	**456.06**	×	**5.33**	-N70	CR OR	**99.3**	×	**5.7**	-N70	CR OR	**499.3**	×	**5.7**	-N70
CR OR	**481.41**	×	**5.33**	-N70	CR OR	**104**	×	**5.7**	-N70	CR OR	**6**	×	**6**	-N70
CR OR	**506.81**	×	**5.33**	-N70	CR OR	**104.1**	×	**5.7**	-N70	CR OR	**7**	×	**6**	-N70
CR OR	**532.21**	×	**5.33**	-N70	CR OR	**104.3**	×	**5.7**	-N70	CR OR	**9**	×	**6**	-N70
CR OR	**557.61**	×	**5.33**	-N70	CR OR	**106.1**	×	**5.7**	-N70	CR OR	**10**	×	**6**	-N70
CR OR	**582.68**	×	**5.33**	-N70	CR OR	**109**	×	**5.7**	-N70	CR OR	**11**	×	**6**	-N70
CR OR	**608.08**	×	**5.33**	-N70	CR OR	**109.1**	×	**5.7**	-N70	CR OR	**12**	×	**6**	-N70
CR OR	**633.48**	×	**5.33**	-N70	CR OR	**109.3**	×	**5.7**	-N70	CR OR	**13**	×	**6**	-N70
CR OR	**658.88**	×	**5.33**	-N70	CR OR	**112.3**	×	**5.7**	-N70	CR OR	**14**	×	**6**	-N70
CR OR	**44.2**	×	**5.7**	-N70	CR OR	**114**	×	**5.7**	-N70	CR OR	**15**	×	**6**	-N70
CR OR	**44.3**	×	**5.7**	-N70	CR OR	**114.3**	×	**5.7**	-N70	CR OR	**16**	×	**6**	-N70
CR OR	**45.3**	×	**5.7**	-N70	CR OR	**119**	×	**5.7**	-N70	CR OR	**18**	×	**6**	-N70
CR OR	**49.2**	×	**5.7**	-N70	CR OR	**119.3**	×	**5.7**	-N70	CR OR	**19**	×	**6**	-N70
CR OR	**49.3**	×	**5.7**	-N70	CR OR	**124**	×	**5.7**	-N70	CR OR	**19.5**	×	**6**	-N70
CR OR	**51.2**	×	**5.7**	-N70	CR OR	**124.3**	×	**5.7**	-N70	CR OR	**20**	×	**6**	-N70

We normally stock O-rings of nitrile rubber (N) 70° IRH. Alternative hardnesses or materials, e.g. fluorocarbon rubber (FPM) or silicone rubber (Q) can also be delivered. Contact us for information about materials.

rgab.ru Берг АБ bergab@ya.ru Тел. (495)-228-06-21, факс (495) 2

rgab.ru Берг АБ bergab@ya.ru Тел. (495)-228-06-21, факс (495) 2

Designation											
	d_1		d_2			d_1		d_2			d_1		d_2	
–	mm			–	–	mm			–	–	mm			–
CR OR	**21**	×	**6**	-N70	CR OR	**67**	×	**6**	-N70	CR OR	**140**	×	**6**	-N70
CR OR	**22**	×	**6**	-N70	CR OR	**68**	×	**6**	-N70	CR OR	**142**	×	**6**	-N70
CR OR	**23**	×	**6**	-N70	CR OR	**69**	×	**6**	-N70	CR OR	**145**	×	**6**	-N70
CR OR	**23.5**	×	**6**	-N70	CR OR	**70**	×	**6**	-N70	CR OR	**146**	×	**6**	-N70
CR OR	**24**	×	**6**	-N70	CR OR	**72**	×	**6**	-N70	CR OR	**148**	×	**6**	-N70
CR OR	**25**	×	**6**	-N70	CR OR	**73**	×	**6**	-N70	CR OR	**150**	×	**6**	-N70
CR OR	**26**	×	**6**	-N70	CR OR	**74**	×	**6**	-N70	CR OR	**153**	×	**6**	-N70
CR OR	**27**	×	**6**	-N70	CR OR	**75**	×	**6**	-N70	CR OR	**154**	×	**6**	-N70
CR OR	**28**	×	**6**	-N70	CR OR	**76**	×	**6**	-N70	CR OR	**155**	×	**6**	-N70
CR OR	**29**	×	**6**	-N70	CR OR	**78**	×	**6**	-N70	CR OR	**155.5**	×	**6**	-N70
CR OR	**30**	×	**6**	-N70	CR OR	**78.5**	×	**6**	-N70	CR OR	**156**	×	**6**	-N70
CR OR	**31**	×	**6**	-N70	CR OR	**79**	×	**6**	-N70	CR OR	**157**	×	**6**	-N70
CR OR	**32**	×	**6**	-N70	CR OR	**80**	×	**6**	-N70	CR OR	**158**	×	**6**	-N70
CR OR	**33**	×	**6**	-N70	CR OR	**85**	×	**6**	-N70	CR OR	**159**	×	**6**	-N70
CR OR	**34**	×	**6**	-N70	CR OR	**86**	×	**6**	-N70	CR OR	**160**	×	**6**	-N70
CR OR	**35**	×	**6**	-N70	CR OR	**88**	×	**6**	-N70	CR OR	**162**	×	**6**	-N70
CR OR	**36**	×	**6**	-N70	CR OR	**90**	×	**6**	-N70	CR OR	**165**	×	**6**	-N70
CR OR	**37**	×	**6**	-N70	CR OR	**92**	×	**6**	-N70	CR OR	**166**	×	**6**	-N70
CR OR	**38**	×	**6**	-N70	CR OR	**93**	×	**6**	-N70	CR OR	**169**	×	**6**	-N70
CR OR	**39**	×	**6**	-N70	CR OR	**95**	×	**6**	-N70	CR OR	**170**	×	**6**	-N70
CR OR	**39.5**	×	**6**	-N70	CR OR	**96**	×	**6**	-N70	CR OR	**172**	×	**6**	-N70
CR OR	**40**	×	**6**	-N70	CR OR	**98**	×	**6**	-N70	CR OR	**175**	×	**6**	-N70
CR OR	**41**	×	**6**	-N70	CR OR	**99**	×	**6**	-N70	CR OR	**176**	×	**6**	-N70
CR OR	**41.5**	×	**6**	-N70	CR OR	**100**	×	**6**	-N70	CR OR	**180**	×	**6**	-N70
CR OR	**42**	×	**6**	-N70	CR OR	**101**	×	**6**	-N70	CR OR	**182**	×	**6**	-N70
CR OR	**43**	×	**6**	-N70	CR OR	**103**	×	**6**	-N70	CR OR	**184**	×	**6**	-N70
CR OR	**44**	×	**6**	-N70	CR OR	**104**	×	**6**	-N70	CR OR	**185**	×	**6**	-N70
CR OR	**44.5**	×	**6**	-N70	CR OR	**104.5**	×	**6**	-N70	CR OR	**188**	×	**6**	-N70
CR OR	**45**	×	**6**	-N70	CR OR	**105**	×	**6**	-N70	CR OR	**190**	×	**6**	-N70
CR OR	**46**	×	**6**	-N70	CR OR	**106**	×	**6**	-N70	CR OR	**191.2**	×	**6**	-N70
CR OR	**47**	×	**6**	-N70	CR OR	**108**	×	**6**	-N70	CR OR	**193**	×	**6**	-N70
CR OR	**48**	×	**6**	-N70	CR OR	**110**	×	**6**	-N70	CR OR	**195**	×	**6**	-N70
CR OR	**49**	×	**6**	-N70	CR OR	**111**	×	**6**	-N70	CR OR	**196**	×	**6**	-N70
CR OR	**50**	×	**6**	-N70	CR OR	**112**	×	**6**	-N70	CR OR	**198**	×	**6**	-N70
CR OR	**51**	×	**6**	-N70	CR OR	**114**	×	**6**	-N70	CR OR	**200**	×	**6**	-N70
CR OR	**52**	×	**6**	-N70	CR OR	**115**	×	**6**	-N70	CR OR	**201**	×	**6**	-N70
CR OR	**53**	×	**6**	-N70	CR OR	**118**	×	**6**	-N70	CR OR	**202**	×	**6**	-N70
CR OR	**54**	×	**6**	-N70	CR OR	**120**	×	**6**	-N70	CR OR	**203**	×	**6**	-N70
CR OR	**55**	×	**6**	-N70	CR OR	**122**	×	**6**	-N70	CR OR	**203.5**	×	**6**	-N70
CR OR	**56**	×	**6**	-N70	CR OR	**123**	×	**6**	-N70	CR OR	**204**	×	**6**	-N70
CR OR	**57**	×	**6**	-N70	CR OR	**124**	×	**6**	-N70	CR OR	**205**	×	**6**	-N70
CR OR	**58**	×	**6**	-N70	CR OR	**125**	×	**6**	-N70	CR OR	**208**	×	**6**	-N70
CR OR	**59.5**	×	**6**	-N70	CR OR	**128**	×	**6**	-N70	CR OR	**210**	×	**6**	-N70
CR OR	**60**	×	**6**	-N70	CR OR	**130**	×	**6**	-N70	CR OR	**212**	×	**6**	-N70
CR OR	**61**	×	**6**	-N70	CR OR	**132**	×	**6**	-N70	CR OR	**215**	×	**6**	-N70
CR OR	**62**	×	**6**	-N70	CR OR	**134**	×	**6**	-N70	CR OR	**216**	×	**6**	-N70
CR OR	**63**	×	**6**	-N70	CR OR	**135**	×	**6**	-N70	CR OR	**217**	×	**6**	-N70
CR OR	**64**	×	**6**	-N70	CR OR	**136**	×	**6**	-N70	CR OR	**218**	×	**6**	-N70
CR OR	**65**	×	**6**	-N70	CR OR	**138**	×	**6**	-N70	CR OR	**220**	×	**6**	-N70
CR OR	**66**	×	**6**	-N70	CR OR	**139.2**	×	**6**	-N70	CR OR	**221**	×	**6**	-N70

We normally stock O-rings of nitrile rubber (N) 70° IRH. Alternative hardnesses or materials, e.g. fluorocarbon rubber (FPM) or silicone rubber (Q) can also be delivered. Contact us for information about materials.

rgab.ru Берг АБ bergab@ya.ru Тел. (495)-228-06-21, факс (495) 2

rgab.ru Берг АБ bergab@ya.ru Тел. (495)-228-06-21, факс (495) 2

O-rings
d_2 **6 – 8,4** mm

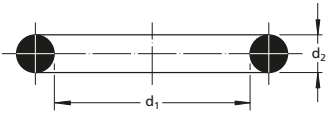

Designation	d_1		d_2	
–	mm			–
CR OR **225**		×	**6**	-N70
CR OR **226**		×	**6**	-N70
CR OR **229**		×	**6**	-N70
CR OR **230**		×	**6**	-N70
CR OR **235**		×	**6**	-N70
CR OR **236**		×	**6**	-N70
CR OR **237**		×	**6**	-N70
CR OR **237.5**		×	**6**	-N70
CR OR **238**		×	**6**	-N70
CR OR **240**		×	**6**	-N70
CR OR **242**		×	**6**	-N70
CR OR **244**		×	**6**	-N70
CR OR **247**		×	**6**	-N70
CR OR **249**		×	**6**	-N70
CR OR **250**		×	**6**	-N70
CR OR **258**		×	**6**	-N70
CR OR **259**		×	**6**	-N70
CR OR **260**		×	**6**	-N70
CR OR **262**		×	**6**	-N70
CR OR **265**		×	**6**	-N70
CR OR **266**		×	**6**	-N70
CR OR **270**		×	**6**	-N70
CR OR **278**		×	**6**	-N70
CR OR **280**		×	**6**	-N70
CR OR **284**		×	**6**	-N70
CR OR **285**		×	**6**	-N70
CR OR **288**		×	**6**	-N70
CR OR **290**		×	**6**	-N70
CR OR **294**		×	**6**	-N70
CR OR **295**		×	**6**	-N70
CR OR **300**		×	**6**	-N70
CR OR **301**		×	**6**	-N70
CR OR **305**		×	**6**	-N70
CR OR **310**		×	**6**	-N70
CR OR **311**		×	**6**	-N70
CR OR **315**		×	**6**	-N70
CR OR **320**		×	**6**	-N70
CR OR **324**		×	**6**	-N70
CR OR **325**		×	**6**	-N70
CR OR **330**		×	**6**	-N70
CR OR **333**		×	**6**	-N70
CR OR **335**		×	**6**	-N70
CR OR **338**		×	**6**	-N70
CR OR **340**		×	**6**	-N70
CR OR **345**		×	**6**	-N70
CR OR **348**		×	**6**	-N70
CR OR **350**		×	**6**	-N70
CR OR **355**		×	**6**	-N70
CR OR **358**		×	**6**	-N70
CR OR **360**		×	**6**	-N70

Designation	d_1		d_2	
–	mm			–
CR OR **365**		×	**6**	-N70
CR OR **368**		×	**6**	-N70
CR OR **370**		×	**6**	-N70
CR OR **375**		×	**6**	-N70
CR OR **376**		×	**6**	-N70
CR OR **380**		×	**6**	-N70
CR OR **385**		×	**6**	-N70
CR OR **386**		×	**6**	-N70
CR OR **388**		×	**6**	-N70
CR OR **389**		×	**6**	-N70
CR OR **390**		×	**6**	-N70
CR OR **392**		×	**6**	-N70
CR OR **394**		×	**6**	-N70
CR OR **395**		×	**6**	-N70
CR OR **398**		×	**6**	-N70
CR OR **400**		×	**6**	-N70
CR OR **415**		×	**6**	-N70
CR OR **422**		×	**6**	-N70
CR OR **429**		×	**6**	-N70
CR OR **446**		×	**6**	-N70
CR OR **448**		×	**6**	-N70
CR OR **450**		×	**6**	-N70
CR OR **453**		×	**6**	-N70
CR OR **470**		×	**6**	-N70
CR OR **478**		×	**6**	-N70
CR OR **480**		×	**6**	-N70
CR OR **483**		×	**6**	-N70
CR OR **486**		×	**6**	-N70
CR OR **489**		×	**6**	-N70
CR OR **500**		×	**6**	-N70
CR OR **504**		×	**6**	-N70
CR OR **505**		×	**6**	-N70
CR OR **508**		×	**6**	-N70
CR OR **510**		×	**6**	-N70
CR OR **516**		×	**6**	-N70
CR OR **530**		×	**6**	-N70
CR OR **540**		×	**6**	-N70
CR OR **544**		×	**6**	-N70
CR OR **549**		×	**6**	-N70
CR OR **552**		×	**6**	-N70
CR OR **555**		×	**6**	-N70
CR OR **560**		×	**6**	-N70
CR OR **569**		×	**6**	-N70
CR OR **575**		×	**6**	-N70
CR OR **579**		×	**6**	-N70
CR OR **113.67**		×	**6.99**	-N70
CR OR **114.7**		×	**6.99**	-N70
CR OR **116.84**		×	**6.99**	-N70
CR OR **120.02**		×	**6.99**	-N70
CR OR **123.19**		×	**6.99**	-N70

Designation	d_1		d_2	
–	mm			–
CR OR **124.6**		×	**6.99**	-N70
CR OR **126.37**		×	**6.99**	-N70
CR OR **129.54**		×	**6.99**	-N70
CR OR **132.72**		×	**6.99**	-N70
CR OR **134.5**		×	**6.99**	-N70
CR OR **135.89**		×	**6.99**	-N70
CR OR **139.07**		×	**6.99**	-N70
CR OR **142.24**		×	**6.99**	-N70
CR OR **145.42**		×	**6.99**	-N70
CR OR **148.59**		×	**6.99**	-N70
CR OR **151.77**		×	**6.99**	-N70
CR OR **155.6**		×	**6.99**	-N70
CR OR **158.12**		×	**6.99**	-N70
CR OR **159.5**		×	**6.99**	-N70
CR OR **161.9**		×	**6.99**	-N70
CR OR **164.47**		×	**6.99**	-N70
CR OR **166.7**		×	**6.99**	-N70
CR OR **168.3**		×	**6.99**	-N70
CR OR **170.82**		×	**6.99**	-N70
CR OR **174.6**		×	**6.99**	-N70
CR OR **177.17**		×	**6.99**	-N70
CR OR **181**		×	**6.99**	-N70
CR OR **183.52**		×	**6.99**	-N70
CR OR **187.3**		×	**6.99**	-N70
CR OR **189.87**		×	**6.99**	-N70
CR OR **193.7**		×	**6.99**	-N70
CR OR **196.22**		×	**6.99**	-N70
CR OR **200**		×	**6.99**	-N70
CR OR **202.57**		×	**6.99**	-N70
CR OR **208.92**		×	**6.99**	-N70
CR OR **215.27**		×	**6.99**	-N70
CR OR **221.62**		×	**6.99**	-N70
CR OR **227.97**		×	**6.99**	-N70
CR OR **234.32**		×	**6.99**	-N70
CR OR **240.67**		×	**6.99**	-N70
CR OR **247**		×	**6.99**	-N70
CR OR **253.37**		×	**6.99**	-N70
CR OR **259.7**		×	**6.99**	-N70
CR OR **266.07**		×	**6.99**	-N70
CR OR **272.4**		×	**6.99**	-N70
CR OR **278.77**		×	**6.99**	-N70
CR OR **285.1**		×	**6.99**	-N70
CR OR **291.47**		×	**6.99**	-N70
CR OR **297.8**		×	**6.99**	-N70
CR OR **304.17**		×	**6.99**	-N70
CR OR **310.5**		×	**6.99**	-N70
CR OR **316.87**		×	**6.99**	-N70
CR OR **323.2**		×	**6.99**	-N70
CR OR **329.57**		×	**6.99**	-N70
CR OR **335.9**		×	**6.99**	-N70

We normally stock O-rings of nitrile rubber (N) 70° IRH. Alternative hardnesses or materials, e.g. fluorocarbon rubber (FPM) or silicone rubber (Q) can also be delivered. Contact us for information about materials.

rgab.ru Берг АБ bergab@ya.ru Тел. (495)-228-06-21, факс (495) 2

rgab.ru Берг АБ bergab@ya.ru Тел. (495)-228-06-21, факс (495) 2

Designation				
	d_1		d_2	
–	mm			–
CR OR	**342.27**	×	**6.99**	-N70
CR OR	**354.97**	×	**6.99**	-N70
CR OR	**367.67**	×	**6.99**	-N70
CR OR	**380.37**	×	**6.99**	-N70
CR OR	**393.07**	×	**6.99**	-N70
CR OR	**405.26**	×	**6.99**	-N70
CR OR	**417.96**	×	**6.99**	-N70
CR OR	**430.66**	×	**6.99**	-N70
CR OR	**443.36**	×	**6.99**	-N70
CR OR	**456.06**	×	**6.99**	-N70
CR OR	**468.76**	×	**6.99**	-N70
CR OR	**481.46**	×	**6.99**	-N70
CR OR	**494.16**	×	**6.99**	-N70
CR OR	**506.86**	×	**6.99**	-N70
CR OR	**532.26**	×	**6.99**	-N70
CR OR	**557.66**	×	**6.99**	-N70
CR OR	**582.68**	×	**6.99**	-N70
CR OR	**608.08**	×	**6.99**	-N70
CR OR	**633.48**	×	**6.99**	-N70
CR OR	**658.88**	×	**6.99**	-N70
CR OR	**206**	×	**7**	-N70
CR OR	**212**	×	**7**	-N70
CR OR	**218**	×	**7**	-N70
CR OR	**224**	×	**7**	-N70
CR OR	**230**	×	**7**	-N70
CR OR	**236**	×	**7**	-N70
CR OR	**243**	×	**7**	-N70
CR OR	**250**	×	**7**	-N70
CR OR	**258**	×	**7**	-N70
CR OR	**265**	×	**7**	-N70
CR OR	**272**	×	**7**	-N70
CR OR	**280**	×	**7**	-N70
CR OR	**290**	×	**7**	-N70
CR OR	**300**	×	**7**	-N70
CR OR	**307**	×	**7**	-N70
CR OR	**315**	×	**7**	-N70
CR OR	**325**	×	**7**	-N70
CR OR	**335**	×	**7**	-N70
CR OR	**345**	×	**7**	-N70
CR OR	**355**	×	**7**	-N70
CR OR	**365**	×	**7**	-N70
CR OR	**375**	×	**7**	-N70
CR OR	**387**	×	**7**	-N70
CR OR	**400**	×	**7**	-N70
CR OR	**412**	×	**7**	-N70
CR OR	**425**	×	**7**	-N70
CR OR	**437**	×	**7**	-N70
CR OR	**450**	×	**7**	-N70
CR OR	**457.2**	×	**7**	-N70
CR OR	**462**	×	**7**	-N70

Designation				
	d_1		d_2	
–	mm			–
CR OR	**475**	×	**7**	-N70
CR OR	**487**	×	**7**	-N70
CR OR	**494.67**	×	**7**	-N70
CR OR	**500**	×	**7**	-N70
CR OR	**515**	×	**7**	-N70
CR OR	**530**	×	**7**	-N70
CR OR	**545**	×	**7**	-N70
CR OR	**545.47**	×	**7**	-N70
CR OR	**560**	×	**7**	-N70
CR OR	**580**	×	**7**	-N70
CR OR	**596.27**	×	**7**	-N70
CR OR	**600**	×	**7**	-N70
CR OR	**615**	×	**7**	-N70
CR OR	**630**	×	**7**	-N70
CR OR	**647.07**	×	**7**	-N70
CR OR	**650**	×	**7**	-N70
CR OR	**670**	×	**7**	-N70
CR OR	**144.1**	×	**8.4**	-N70
CR OR	**149.1**	×	**8.4**	-N70
CR OR	**154.1**	×	**8.4**	-N70
CR OR	**159.1**	×	**8.4**	-N70
CR OR	**164.1**	×	**8.4**	-N70
CR OR	**169.1**	×	**8.4**	-N70
CR OR	**174.1**	×	**8.4**	-N70
CR OR	**179.1**	×	**8.4**	-N70
CR OR	**184.1**	×	**8.4**	-N70
CR OR	**189.1**	×	**8.4**	-N70
CR OR	**194.1**	×	**8.4**	-N70
CR OR	**199.1**	×	**8.4**	-N70
CR OR	**204.1**	×	**8.4**	-N70
CR OR	**209.1**	×	**8.4**	-N70
CR OR	**215.1**	×	**8.4**	-N70
CR OR	**219.1**	×	**8.4**	-N70
CR OR	**224.1**	×	**8.4**	-N70
CR OR	**229.1**	×	**8.4**	-N70
CR OR	**234.1**	×	**8.4**	-N70
CR OR	**239.1**	×	**8.4**	-N70
CR OR	**249.1**	×	**8.4**	-N70

We normally stock O-rings of nitrile rubber (N) 70° IRH. Alternative hardnesses or materials, e.g. fluorocarbon rubber (FPM) or silicone rubber (Q) can also be delivered. Contact us for information about materials.

rgab.ru Берг АБ bergab@ya.ru Тел. (495)-228-06-21, факс (495) 2

rgab.ru Берг АБ bergab@ya.ru Тел. (495)-228-06-21, факс (495) 2

PTFE encapsulated O-rings, type ECOR

Teflon™ FEP encapsulated O-ring of silicone or Viton®, type ECOR, can be delivered in PFA, which withstands high temperatures.

Structure

ECOR is an O-ring consisting of a seamless and uniform Teflon™ FEP encapsulation which completely enclose the core material of either silicone or Viton® in order to protect it from media and air.

Function

The function is the same as for a normal O-ring that is compressed in the groove and is working statically. ECOR is not appropriate for continuously dynamic applications due to its thin and soft case.

Advantages

- Chemically resistant to aggressive media thanks to the Teflon™ FEP encapsulation
- Wide temperature range, –60 to +205 °C (PFA +260 °C)
- Anti-adhesive, no stick-slip effects
- Sterilizable, FDA approved
- Low steam permeability and low water absorption
- Low compression set

Designations

Sealpool PTFE encapsulated O-rings are designated according to a system which clearly states seal series, inside diameter, radial cross section and material combination, see **Table 1**. See **Table 2** for material combinations.

Standard sections

ECOR is manufactured according to the standard sections in **Table 3**.

Groove design

Since ECOR is used in many types of applications it is important to consider the effects of thermal expansion, extrusion and compression set when figuring the groove. In e.g. high temperature applications it is necessary to increase the groove width to compensate for the thermal expansion in order to achieve an effctive system solution.

The groove dimensions for installing ECOR can be taken from the table. It should be noted that these standard dimensions are the same as for all elastomer O-rings and can be used as a starting point when evaluating an effective seal. In many applications these dimensions will need no modifications when machining grooves in metal. When machining grooves in Teflon, polypropylene or other plastics, it is recommended that the groove width be 114 % of the chosen O-ring cross section, the depth be 86 %, and the surface roughness value be <1,25 µm R_a, see **Table 1**.

Table 1

Designation codes for ECOR PTFE encapsulated O-rings

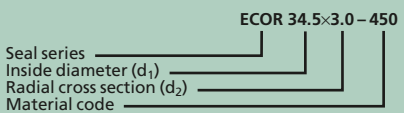

Table 2

Material combinations and operating temperature

Material combination	Code	Temperature
Silicone core/ FEP uniform	450	–60 to +205 °C
FKM core/ FEP uniform	460	–25 to +205 °C

rgab.ru Берг АБ bergab@ya.ru Тел. (495)-228-06-21, факс (495) 2

rgab.ru Берг АБ bergab@ya.ru Тел. (495)-228-06-21, факс (495) 2

Table 3

Standard sections

US and UK standard	Swedish standard	Metric
mm		
1,78	2,4	2
2,62	3	2,5
3,53	5,7	3,5
5,34		4
7		4,5
8,4		5
10		

Assembly of ECOR

The assembling area should be free of sharp edges, burrs, machining traces, threads etc. A clean, light lubricnt can be applied to the ECOR to minimize abrasion. It should be noted that the elasticity of the rubber core material within the ECOR is impaired by the less flexible FEP encapsulation.

To improve flexibility for difficult installations (over shaft, piston, etc) the ECOR can be heated to approximately 150 °C (boiling water, oil bath, hot air). This softens the O-ring and allows it to be stretched. Install the O-ring when it is still hot as it will shrink to a tight fit when cooled. Please study **Table 4** for further assembly recommendations.

Table 4

Assembly recommendations

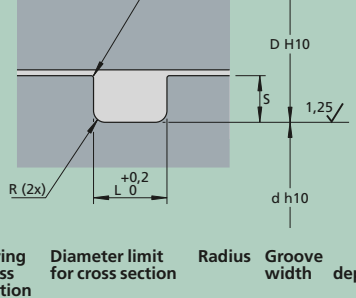

O-ring cross section d_2	Diameter limit for cross section min	max	Radius R	Groove width L	depth S
mm					
1,78	12,42	38,1	0,5	2,55	1,27
2	12,42	38,1	0,5	2,8	1,47
2,4	15,54	45	0,5	3,1	1,83
2,5	15,54	55	0,5	3,2	1,9
2,62	15,54	63	0,8	3,3	1,98
3	15,54	88,9	1	3,8	2,24
3,5	15,54	127	1	4,45	2,74
3,53	15,54	127	1	4,45	2,77
4	31,75	254	1	5,1	3,16
4,5	31,75	254	1	5,8	3,58
5	31,75	381	1	6,35	3,98
5,33	32,68	*)	1	7	4,19
5,7	44,45	*)	1	7,4	4,56
6	50,16	*)	1	7,6	4,81
7	120,65	*)	1,5	8,9	5,73
8,4	127	*)	1,5	10,75	6,75
10	152,4	*)	1,5	13,2	8,1
12	203,2	*)	1,5	14,35	9,84
14	203,2	*)	1,5	16,8	11,3
16	203,2	*)	1,5	18,5	12,83
18	203,2	*)	1,5	22,8	13,6
20	203,2	*)	1,5	25,8	14,6

*) No limitation

rgab.ru Берг АБ bergab@ya.ru Тел. (495)-228-06-21, факс (495) 2

rgab.ru Берг АБ bergab@ya.ru Тел. (495)-228-06-21, факс (495) 2

rgab.ru Берг АБ bergab@ya.ru Тел. (495)-228-06-21, факс (495) 2

Back-up rings

Back-up rings **316**
Designations 318
Materials 318
Sizes and stock-keeping 319
Back-up rings of polyurethane 319
Back-up rings of PTFE 319
Production of new sizes 319

Product tables **320**

rgab.ru Берг АБ bergab@ya.ru Тел. (495)-228-06-21, факс (495) 2

rgab.ru Берг АБ bergab@ya.ru Тел. (495)-228-06-21, факс (495) 22

Back-up rings

O-rings are often used as static sealing elements in hydraulic systems. However, they tend to extrude into the clearance already at low pressures and are thereby destroyed. A common solution is to use O-rings of a material with increased hardness, e.g. 90° IRH.

This provides a certain improvement, but the sealing ability decreases in cold since rubber materials with a hardness of 90° IRH lose too much of the elasticity in temperatures below –15 to –20 °C. Additionally, such material ages much faster already in moderate heat and turns brittle.

A better solution for hydraulic applications is instead to combine O-rings for static functions with back-up rings, see **Diagram 1** to **3**. In applications where the O-ring is exposed to pressure from one side only the back-up ring is installed at the zero pressure side. For an O-ring exposed to pressure from both sides a back-up ring is assembled on either side.

Diagram 1 to **3** represent guiding values for maximum pressure in relation to the clearance gap at which O-rings of different materials with back-up ring(s) can be used. Several other factors, e.g. temperature and type of medium effect these guiding values. The results in **Diagram 1** and **2** are from tests in our own laboratory at a temperature of +90 °C and 100 000 pressure pulses. **Diagram 3** shows guiding pressure values for O-rings of N 70° IRH.

For further instructions, please study **Table 1** for installation according to Swedish standard and **Table 2** for English-American standard.

Diagram 1

Results from tests with O-ring 89,5×3 and back-up ring 90×95×1,3

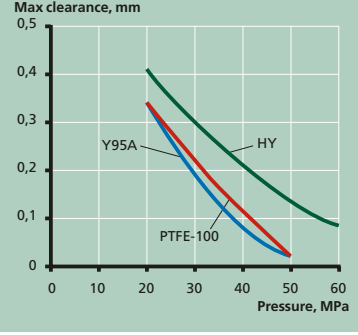

Diagram 2

Results from tests with O-ring 89,1×5,7 and back-up ring 90×100×1,7

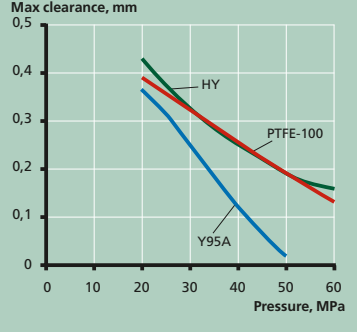

rgab.ru Берг АБ bergab@ya.ru Тел. (495)-228-06-21, факс (495) 22

rgab.ru Берг АБ bergab@ya.ru Тел. (495)-228-06-21, факс (495) 2

Diagram 3

Guiding pressure values for O-ring N 70° IRH

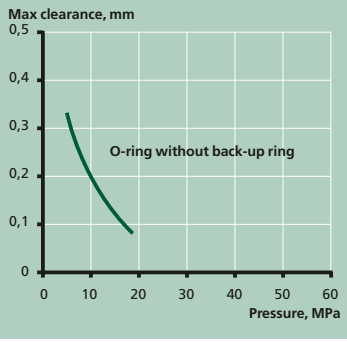

Table 1

Installation dimensions, Swedish standard

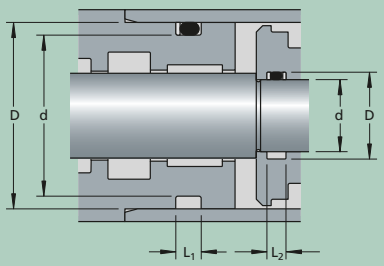

O-ring cross section	Back-up ring width	Groove lengths O-rings with 1 back-up ring L_1	2 back-up rings L_2	Tolerance min	max
mm					
2,4	1,3	4,6	6	0	+0,2
3	1,3	5,4	6,8	0	+0,2
5,7	1,7	9,3	11,1	0	+0,2
8,4	2,1	13,2	15,4	0	+0,2

Table 2

Installation dimensions, English–American standard

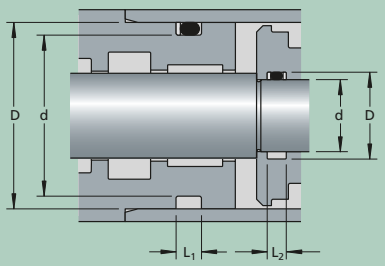

O-ring cross section	Back-up ring width	Groove lengths O-rings with 1 back-up ring L_1	2 back-up rings L_2	Tolerance min	max
mm					
1,78	1,1	3,8	5,2	0	+0,2
2,62	1,3	5	6,4	0	+0,2
3,53	1,5	6,2	7,6	0	+0,2
5,34	1,7	8,8	10,5	0	+0,2
6,99	2	12	14,5	0	+0,2

rgab.ru Берг АБ bergab@ya.ru Тел. (495)-228-06-21, факс (495) 2

rgab.ru Берг АБ bergab@ya.ru Тел. (495)-228-06-21, факс (495) 2

Designations

SEALPOOL back-up rings are designated according to a system that states the inside diameter, the outside diameter, the width and the material code, see **Table 3**.

Materials

Our back-up rings are kept in stock with a basic design and are produced of polyurethane 95° Shore A[1] and a polyester elastomer, -HY 95° Shore A. This enables the use of back-up rings in most applications with normal pressure media and temperatures.

In applications with high temperatures or aggressive media back-up rings of a PTFE material are suitable, either unfilled or with an appropriate filler. We keep a large number of sizes of unfilled back-up rings of PTFE in stock. These are machine finished and can therefore be delivered within short notice.

Please define the appropriate material at request or order. The most common materials for back-up rings are listed in **Table 4**.

Table 3

Designation codes for back-up rings

STR 90×100×1.7 – Y95A

Back-up ring
Inside diameter
Outside diameter
Width
Material code

Table 4

Code	Material
-Y95A	Polyurethane 95° Shore A (yellow)[1]
-395A	Polyurethane 98° Shore A (black)
-HY	Polyester elastomer, 95° Shore A (yellow)
-100	Unfilled PTFE

[1)] The hardness of rubber materials is normally stated in ° IRH (grades according to International Rubber Hardness) while the hardness of polyurethane is stated in grades Shore. The difference is insignificant for most materials, but the ranges are not completely comparable.

rgab.ru Берг АБ bergab@ya.ru Тел. (495)-228-06-21, факс (495) 2

rgab.ru Берг АБ bergab@ya.ru Тел. (495)-228-06-21, факс (495) 2

Sizes and stock-keeping

Back-up rings of polyurethane

Our back-up rings kept in stock have a basic design and are produced of polyurethane -Y95A and the polyester elastomer -HY to be assembled with O-rings with the cross sections 2,4, 3 and 5,7 mm according to SMS 1586. The measures correspond with SMS 2292.

A growing range of special sizes produced of the same materials, polyurethane -Y95A and -HY, is also kept in stock. These special sizes are manufactured to be used in applications where the Swedish standard SMS 1588 for static installation is preferred, e.g. installations with large radial compression.

Back-up rings of PTFE

We also keep a large number of sizes of back-up rings of unfilled PTFE (material code -100) in stock to be used with O-rings with the cross sections 2,4, 3 and 5,7 mm according to SMS 1586. The measures and tolerances correspond with SMS 2292.

Several special sizes of back-up rings of unfilled PTFE are also kept in stock.

Production of new sizes

New sizes are continually added! This is possible since our tool costs for the production of back-up rings of polyurethane -Y95A are low and because there is no need for tools when producing back-up rings of PTFE machined from tube blanks. The back-up ring sizes can therefore easily be adapted to special installations.

There are in practice no size limitations when it comes to back-up rings of PTFE. Diameters from 1 to 1 500 mm can be produced. The size range for back-up rings of polyurethane -Y95A is 10 to 400 mm.

rgab.ru Берг АБ bergab@ya.ru Тел. (495)-228-06-21, факс (495) 2

rgab.ru Берг АБ bergab@ya.ru Тел. (495)-228-06-21, факс (495) 2

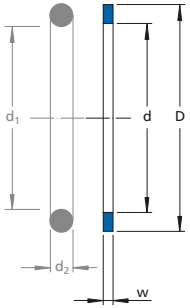

O-ring d_1		d_2	Back-up ring Designation
mm			–
9,3	×	**2,4**	CR STR **10**×**14**×**1.3**-Y95A
10,3	×	**2,4**	CR STR **11**×**15**×**1.3**-Y95A
11,3	×	**2,4**	CR STR **12**×**16**×**1.3**-Y95A
12,3	×	**2,4**	CR STR **13**×**17**×**1.3**-Y95A
13,3	×	**2,4**	CR STR **14**×**18**×**1,3**-Y95A
14,3	×	**2,4**	CR STR **15**×**19**×**1.3**-Y95A
15,3	×	**2,4**	CR STR **16**×**20**×**1.3**-Y95A
17,3	×	**2,4**	CR STR **18**×**22**×**1.3**-Y95A
19,2	×	**3**	CR STR **20**×**25**×**1.3**-Y95A
22,2	×	**3**	CR STR **23**×**28**×**1.3**-Y95A
24,2	×	**3**	CR STR **25**×**30**×**1.3**-Y95A
26,2	×	**3**	CR STR **27**×**32**×**1.3**-Y95A
29,2	×	**3**	CR STR **30**×**35**×**1.3**-Y95A
31,2	×	**3**	CR STR **32**×**37**×**1.3**-Y95A
32,2	×	**3**	CR STR **33**×**38**×**1.3**-Y95A
34,2	×	**3**	CR STR **35**×**40**×**1.3**-Y95A
36,2	×	**3**	CR STR **37**×**42**×**1.3**-Y95A
39,2	×	**3**	CR STR **40**×**45**×**1.3**-Y95A
42,2	×	**3**	CR STR **43**×**48**×**1.3**-Y95A
44,2	×	**3**	CR STR **45**×**50**×**1.3**-Y95A
49,5	×	**3**	CR STR **50**×**55**×**1.3**-Y95A
54,5	×	**3**	CR STR **55**×**60**×**1.3**-Y95A
57,5	×	**3**	CR STR **58**×**63**×**1.3**-Y95A
59,5	×	**3**	CR STR **60**×**65**×**1.3**-Y95A
64,5	×	**3**	CR STR **65**×**70**×**1.3**-Y95A
69,5	×	**3**	CR STR **70**×**75**×**1.3**-Y95A
74,5	×	**3**	CR STR **75**×**80**×**1.3**-Y95A
79,5	×	**3**	CR STR **80**×**85**×**1.3**-Y95A
84,5	×	**3**	CR STR **85**×**90**×**1.3**-Y95A
89,5	×	**3**	CR STR **90**×**95**×**1.3**-Y95A
94,5	×	**3**	CR STR **95**×**100**×**1.3**-Y95A
99,5	×	**3**	CR STR **100**×**105**×**1.3**-Y95A
104,5	×	**3**	CR STR **105**×**110**×**1.3**-Y95A
109,5	×	**3**	CR STR **110**×**115**×**1.3**-Y95A
114,5	×	**3**	CR STR **115**×**120**×**1.3**-Y95A

O-ring d_1		d_2	Back-up ring Designation
mm			–
119,5	×	**3**	CR STR **120**×**125**×**1.3**-Y95A
124,5	×	**3**	CR STR **125**×**130**×**1.3**-Y95A
129,5	×	**3**	CR STR **130**×**135**×**1.3**-Y95A
134,5	×	**3**	CR STR **135**×**140**×**1.3**-Y95A
139,5	×	**3**	CR STR **140**×**145**×**1.3**-Y95A
144,5	×	**3**	CR STR **145**×**150**×**1.3**-Y95A
44,2	×	**5,7**	CR STR **45**×**55**×**1.7**-Y95A
49,2	×	**5,7**	CR STR **50**×**60**×**1.7**-Y95A
52,3	×	**5,7**	CR STR **53**×**63**×**1.7**-Y95A
54,2	×	**5,7**	CR STR **55**×**65**×**1.7**-Y95A
59,2	×	**5,7**	CR STR **60**×**70**×**1.7**-Y95A
64,2	×	**5,7**	CR STR **65**×**75**×**1.7**-Y95A
69,2	×	**5,7**	CR STR **70**×**80**×**1.7**-Y95A
74,2	×	**5,7**	CR STR **75**×**85**×**1.7**-Y95A
79,2	×	**5,7**	CR STR **80**×**90**×**1.7**-Y95A
84,1	×	**5,7**	CR STR **85**×**95**×**1.7**-Y95A
89,1	×	**5,7**	CR STR **90**×**100**×**1.7**-Y95A
94,1	×	**5,7**	CR STR **95**×**105**×**1.7**-Y95A
99,1	×	**5,7**	CR STR **100**×**110**×**1.7**-Y95A
104,1	×	**5,7**	CR STR **105**×**115**×**1.7**-Y95A
109,1	×	**5,7**	CR STR **110**×**120**×**1.7**-Y95A
114,3	×	**5,7**	CR STR **115**×**125**×**1.7**-Y95A
119,3	×	**5,7**	CR STR **120**×**130**×**1.7**-Y95A
124,3	×	**5,7**	CR STR **125**×**135**×**1.7**-Y95A
129,3	×	**5,7**	CR STR **130**×**140**×**1.7**-Y95A
134,3	×	**5,7**	CR STR **135**×**145**×**1.7**-Y95A
139,3	×	**5,7**	CR STR **140**×**150**×**1.7**-Y95A
144,3	×	**5,7**	CR STR **145**×**155**×**1.7**-Y95A
149,3	×	**5,7**	CR STR **150**×**160**×**1.7**-Y95A
154,3	×	**5,7**	CR STR **155**×**165**×**1.7**-Y95A
159,3	×	**5,7**	CR STR **160**×**170**×**1.7**-Y95A
164,3	×	**5,7**	CR STR **165**×**175**×**1.7**-Y95A
169,3	×	**5,7**	CR STR **170**×**180**×**1.7**-Y95A
174,3	×	**5,7**	CR STR **175**×**185**×**1.7**-Y95A
179,3	×	**5,7**	CR STR **180**×**190**×**1.7**-Y95A

rgab.ru Берг АБ bergab@ya.ru Тел. (495)-228-06-21, факс (495) 2

rgab.ru Берг АБ bergab@ya.ru Тел. (495)-228-06-21, факс (495) 2

O-ring			Back-up ring Designation
d_1		d_2	
mm			–
184,3	×	**5,7**	CR STR **185**×**195**×**1.7**-Y95A
189,3	×	**5,7**	CR STR **190**×**200**×**1.7**-Y95A
194,3	×	**5,7**	CR STR **195**×**205**×**1.7**-Y95A
199,3	×	**5,7**	CR STR **200**×**210**×**1.7**-Y95A
204,3	×	**5,7**	CR STR **205**×**215**×**1.7**-Y95A
209,3	×	**5,7**	CR STR **210**×**220**×**1.7**-Y95A
214,3	×	**5,7**	CR STR **215**×**225**×**1.7**-Y95A
219,3	×	**5,7**	CR STR **220**×**230**×**1.7**-Y95A
224,3	×	**5,7**	CR STR **225**×**235**×**1.7**-Y95A
229,3	×	**5,7**	CR STR **230**×**240**×**1.7**-Y95A
234,3	×	**5,7**	CR STR **235**×**245**×**1.7**-Y95A
239,3	×	**5,7**	CR STR **240**×**250**×**1.7**-Y95A
244,3	×	**5,7**	CR STR **245**×**255**×**1.7**-Y95A
249,3	×	**5,7**	CR STR **250**×**260**×**1.7**-Y95A

rgab.ru Берг АБ bergab@ya.ru Тел. (495)-228-06-21, факс (495) 2

rgab.ru Берг АБ bergab@ya.ru Тел. (495)-228-06-21, факс (495) 22

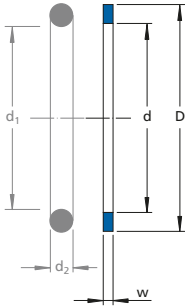

O-ring d_1		d_2	Back-up ring Designation
mm			–
10,82	×	**1,78**	CR STR 19-13-395A
12,42	×	**1,78**	CR STR 19-14-395A
14	×	**1,78**	CR STR 19-15-395A
15,6	×	**1,78**	CR STR 19-16-395A
17,17	×	**1,78**	CR STR 19-17-395A
18,77	×	**1,78**	CR STR 19-18-395A
20,35	×	**1,78**	CR STR 19-19-395A
21,95	×	**1,78**	CR STR 19-20-395A
23,52	×	**1,78**	CR STR 19-21-395A
25,12	×	**1,78**	CR STR 19-22-395A
26,7	×	**1,78**	CR STR 19-23-395A
28,3	×	**1,78**	CR STR 19-24-395A
29,87	×	**1,78**	CR STR 19-25-395A
31,47	×	**1,78**	CR STR 19-26-395A
33,05	×	**1,78**	CR STR 19-27-395A
34,65	×	**1,78**	CR STR 19-28-395A
37,82	×	**1,78**	CR STR 19-29-395A
41	×	**1,78**	CR STR 19-30-395A
44,17	×	**1,78**	CR STR 19-31-395A
47,35	×	**1,78**	CR STR 19-32-395A
50,52	×	**1,78**	CR STR 19-33-395A
53,7	×	**1,78**	CR STR 19-34-395A
56,87	×	**1,78**	CR STR 19-35-395A
60,05	×	**1,78**	CR STR 19-36-395A
63,22	×	**1,78**	CR STR 19-37-395A
66,4	×	**1,78**	CR STR 19-38-395A
69,57	×	**1,78**	CR STR 19-39-395A
72,75	×	**1,78**	CR STR 19-40-395A
75,92	×	**1,78**	CR STR 19-41-395A
82,27	×	**1,78**	CR STR 19-42-395A
88,62	×	**1,78**	CR STR 19-43-395A
94,97	×	**1,78**	CR STR 19-44-395A
101,32	×	**1,78**	CR STR 19-45-395A
107,67	×	**1,78**	CR STR 19-46-395A
114,02	×	**1,78**	CR STR 19-47-395A

O-ring d_1		d_2	Back-up ring Designation
mm			
120,37	×	**1,78**	CR STR 19-48-395A
126,72	×	**1,78**	CR STR 19-49-395A
133,07	×	**1,78**	CR STR 19-50-395A
10,78	×	**2,62**	CR STR 19-111-395A
12,37	×	**2,62**	CR STR 19-112-395A
13,95	×	**2,62**	CR STR 19-113-395A
15,54	×	**2,62**	CR STR 19-114-395A
17,13	×	**2,62**	CR STR 19-115-395A
18,72	×	**2,62**	CR STR 19-116-395A
20,3	×	**2,62**	CR STR 19-117-395A
21,89	×	**2,62**	CR STR 19-118-395A
23,47	×	**2,62**	CR STR 19-119-395A
25,07	×	**2,62**	CR STR 19-120-395A
26,64	×	**2,62**	CR STR 19-121-395A
28,25	×	**2,62**	CR STR 19-122-395A
29,85	×	**2,62**	CR STR 19-123-395A
31,42	×	**2,62**	CR STR 19-124-395A
33	×	**2,62**	CR STR 19-125-395A
34,59	×	**2,62**	CR STR 19-126-395A
36,17	×	**2,62**	CR STR 19-127-395A
37,77	×	**2,62**	CR STR 19-128-395A
39,34	×	**2,62**	CR STR 19-129-395A
40,95	×	**2,62**	CR STR 19-130-395A
42,52	×	**2,62**	CR STR 19-131-395A
44,12	×	**2,62**	CR STR 19-132-395A
45,69	×	**2,62**	CR STR 19-133-395A
47,29	×	**2,62**	CR STR 19-134-395A
48,9	×	**2,62**	CR STR 19-135-395A
50,47	×	**2,62**	CR STR 19-136-395A
52,07	×	**2,62**	CR STR 19-137-395A
53,64	×	**2,62**	CR STR 19-138-395A
55,25	×	**2,62**	CR STR 19-139-395A
56,82	×	**2,62**	CR STR 19-140-395A
58,42	×	**2,62**	CR STR 19-141-395A
60	×	**2,62**	CR STR 19-142-395A

rgab.ru Берг АБ bergab@ya.ru Тел. (495)-228-06-21, факс (495) 22

rgab.ru Берг АБ bergab@ya.ru Тел. (495)-228-06-21, факс (495) 22

O-ring d_1		d_2	Back-up ring Designation
mm			
61,6	×	**2,62**	CR STR 19-143-395A
63,17	×	**2,62**	CR STR 19-144-395A
64,77	×	**2,62**	CR STR 19-145-395A
66,34	×	**2,62**	CR STR 19-146-395A
67,95	×	**2,62**	CR STR 19-147-395A
69,52	×	**2,62**	CR STR 19-148-395A
71,12	×	**2,62**	CR STR 19-149-395A
72,69	×	**2,62**	CR STR 19-150-395A
75,87	×	**2,62**	CR STR 19-151-395A
82,22	×	**2,62**	CR STR 19-152-395A
88,57	×	**2,62**	CR STR 19-153-395A
94,92	×	**2,62**	CR STR 19-154-395A
101,27	×	**2,62**	CR STR 19-155-395A
120,32	×	**2,62**	CR STR 19-158-395A
126,67	×	**2,62**	CR STR 19-159-395A
133,02	×	**2,62**	CR STR 19-160-395A
139,37	×	**2,62**	CR STR 19-161-395A
145,72	×	**2,62**	CR STR 19-162-395A
152,07	×	**2,62**	CR STR 19-163-395A
177,47	×	**2,62**	CR STR 19-167-395A
10,69	×	**3,53**	CR STR 19-205-395A
12,29	×	**3,53**	CR STR 19-206-395A
13,87	×	**3,53**	CR STR 19-207-395A
15,47	×	**3,53**	CR STR 19-208-395A
17,04	×	**3,53**	CR STR 19-209-395A
18,64	×	**3,53**	CR STR 19-210-395A
20,22	×	**3,53**	CR STR 19-211-395A
21,82	×	**3,53**	CR STR 19-212-395A
23,4	×	**3,53**	CR STR 19-213-395A
24,99	×	**3,53**	CR STR 19-214-395A
26,58	×	**3,53**	CR STR 19-215-395A
28,17	×	**3,53**	CR STR 19-216-395A
29,75	×	**3,53**	CR STR 19-217-395A
31,34	×	**3,53**	CR STR 19-218-395A
32,93	×	**3,53**	CR STR 19-219-395A

O-ring d_1		d_2	Back-up ring Designation
mm			
34,52	×	**3,53**	CR STR 19-220-395A
36,1	×	**3,53**	CR STR 19-221-395A
37,69	×	**3,53**	CR STR 19-222-395A
40,87	×	**3,53**	CR STR 19-223-395A
44,04	×	**3,53**	CR STR 19-224-395A
47,2	×	**3,53**	CR STR 19-225-395A
50,34	×	**3,53**	CR STR 19-226-395A
53,56	×	**3,53**	CR STR 19-227-395A
56,74	×	**3,53**	CR STR 19-228-395A
59,92	×	**3,53**	CR STR 19-229-395A
63,09	×	**3,53**	CR STR 19-230-395A
66,27	×	**3,53**	CR STR 19-231-395A
69,44	×	**3,53**	CR STR 19-232-395A
72,62	×	**3,53**	CR STR 19-233-395A
75,79	×	**3,53**	CR STR 19-234-395A
78,97	×	**3,53**	CR STR 19-235-395A
82,1	×	**3,53**	CR STR 19-236-395A
85,32	×	**3,53**	CR STR 19-237-395A
88,49	×	**3,53**	CR STR 19-238-395A
91,67	×	**3,53**	CR STR 19-239-395A
94,84	×	**3,53**	CR STR 19-240-395A
98,02	×	**3,53**	CR STR 19-241-395A
101,19	×	**3,53**	CR STR 19-242-395A
104,37	×	**3,53**	CR STR 19-243-395A
107,54	×	**3,53**	CR STR 19-244-395A
110,72	×	**3,53**	CR STR 19-245-395A
113,89	×	**3,53**	CR STR 19-246-395A
117,07	×	**3,53**	CR STR 19-247-395A
120,24	×	**3,53**	CR STR 19-248-395A
123,42	×	**3,53**	CR STR 19-249-395A
126,59	×	**3,53**	CR STR 19-250-395A
129,77	×	**3,53**	CR STR 19-251-395A
132,94	×	**3,53**	CR STR 19-252-395A
136,12	×	**3,53**	CR STR 19-253-395A
139,29	×	**3,53**	CR STR 19-254-395A

8

rgab.ru Берг АБ bergab@ya.ru Тел. (495)-228-06-21, факс (495) 22

rgab.ru Берг АБ bergab@ya.ru Тел. (495)-228-06-21, факс (495) 22

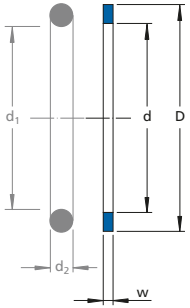

O-ring d_1		d_2	Back-up ring Designation
mm			
142,47	×	**3,53**	CR STR 19-255-395A
145,64	×	**3,53**	CR STR 19-256-395A
148,82	×	**3,53**	CR STR 19-257-395A
151,99	×	**3,53**	CR STR 19-258-395A
158,34	×	**3,53**	CR STR 19-259-395A
164,69	×	**3,53**	CR STR 19-260-395A
171,04	×	**3,53**	CR STR 19-261-395A
177,39	×	**3,53**	CR STR 19-262-395A
196,44	×	**3,53**	CR STR 19-265-395A
202,79	×	**3,53**	CR STR 19-266-395A
209,14	×	**3,53**	CR STR 19-267-395A
215,49	×	**3,53**	CR STR 19-268-395A
221,84	×	**3,53**	CR STR 19-269-395A
228,19	×	**3,53**	CR STR 19-270-395A
234,54	×	**3,53**	CR STR 19-271-395A
240,89	×	**3,53**	CR STR 19-272-395A
247,26	×	**3,53**	CR STR 19-273-395A
10,46	×	**5,34**	CR STR 19-309-395A
12,07	×	**5,34**	CR STR 19-310-395A
13,64	×	**5,34**	CR STR 19-311-395A
15,24	×	**5,34**	CR STR 19-312-395A
16,81	×	**5,34**	CR STR 19-313-395A
18,42	×	**5,34**	CR STR 19-314-395A
19,99	×	**5,34**	CR STR 19-315-395A
21,59	×	**5,34**	CR STR 19-316-395A
23,16	×	**5,34**	CR STR 19-317-395A
24,77	×	**5,34**	CR STR 19-318-395A
26,34	×	**5,34**	CR STR 19-319-395A
27,94	×	**5,34**	CR STR 19-320-395A
29,51	×	**5,34**	CR STR 19-321-395A
31,12	×	**5,34**	CR STR 19-322-395A
32,69	×	**5,34**	CR STR 19-323-395A
34,29	×	**5,34**	CR STR 19-324-395A
37,47	×	**5,34**	CR STR 19-325-395A
40,65	×	**5,34**	CR STR 19-326-395A

O-ring d_1		d_2	Back-up ring Designation
mm			
43,82	×	**5,34**	CR STR 19-327-395A
47	×	**5,34**	CR STR 19-328-395A
50,16	×	**5,34**	CR STR 19-329-395A
53,34	×	**5,34**	CR STR 19-330-395A
56,52	×	**5,34**	CR STR 19-331-395A
59,69	×	**5,34**	CR STR 19-332-395A
62,87	×	**5,34**	CR STR 19-333-395A
66,04	×	**5,34**	CR STR 19-334-395A
69,22	×	**5,34**	CR STR 19-335-395A
72,39	×	**5,34**	CR STR 19-336-395A
75,57	×	**5,34**	CR STR 19-337-395A
78,74	×	**5,34**	CR STR 19-338-395A
81,92	×	**5,34**	CR STR 19-339-395A
85,09	×	**5,34**	CR STR 19-340-395A
88,27	×	**5,34**	CR STR 19-341-395A
91,44	×	**5,34**	CR STR 19-342-395A
94,62	×	**5,34**	CR STR 19-343-395A
97,79	×	**5,34**	CR STR 19-344-395A
101	×	**5,34**	CR STR 19-345-395A
104,14	×	**5,34**	CR STR 19-346-395A
107,32	×	**5,34**	CR STR 19-347-395A
110,5	×	**5,34**	CR STR 19-348-395A
113,67	×	**5,34**	CR STR 19-349-395A
116,84	×	**5,34**	CR STR 19-350-395A
120,02	×	**5,34**	CR STR 19-351-395A
123,19	×	**5,34**	CR STR 19-352-395A
126,37	×	**5,34**	CR STR 19-353-395A
129,54	×	**5,34**	CR STR 19-354-395A
132,72	×	**5,34**	CR STR 19-355-395A
135,89	×	**5,34**	CR STR 19-356-395A
139,07	×	**5,34**	CR STR 19-357-395A
142,24	×	**5,34**	CR STR 19-358-395A
145,42	×	**5,34**	CR STR 19-359-395A
148,59	×	**5,34**	CR STR 19-360-395A
151,77	×	**5,34**	CR STR 19-361-395A

rgab.ru Берг АБ bergab@ya.ru Тел. (495)-228-06-21, факс (495) 22

rgab.ru Берг АБ bergab@ya.ru Тел. (495)-228-06-21, факс (495) 2

O-ring d_1		d_2	Back-up ring Designation
mm			
158,12	×	**5,34**	CR STR 19-362-395A
164,47	×	**5,34**	CR STR 19-363-395A
170,82	×	**5,34**	CR STR 19-364-395A
177,17	×	**5,34**	CR STR 19-365-395A
183,52	×	**5,34**	CR STR 19-366-395A
189,87	×	**5,34**	CR STR 19-367-395A
196,22	×	**5,34**	CR STR 19-368-395A
202,57	×	**5,34**	CR STR 19-369-395A
208,92	×	**5,34**	CR STR 19-370-395A
215,27	×	**5,34**	CR STR 19-371-395A
221,62	×	**5,34**	CR STR 19-372-395A
227,97	×	**5,34**	CR STR 19-373-395A
234,32	×	**5,34**	CR STR 19-374-395A
240,67	×	**5,34**	CR STR 19-375-395A
113,7	×	**6,99**	CR STR 19-425-395A
116,8	×	**6,99**	CR STR 19-426-395A
120	×	**6,99**	CR STR 19-427-395A
123,2	×	**6,99**	CR STR 19-428-395A
126,4	×	**6,99**	CR STR 19-429-395A
129,5	×	**6,99**	CR STR 19-430-395A
132,7	×	**6,99**	CR STR 19-431-395A
135,9	×	**6,99**	CR STR 19-432-395A
139,1	×	**6,99**	CR STR 19-433-395A
142,2	×	**6,99**	CR STR 19-434-395A
145,4	×	**6,99**	CR STR 19-435-395A
148,6	×	**6,99**	CR STR 19-436-395A
151,8	×	**6,99**	CR STR 19-437-395A
158,1	×	**6,99**	CR STR 19-438-395A
164,5	×	**6,99**	CR STR 19-439-395A
170,8	×	**6,99**	CR STR 19-440-395A
177,2	×	**6,99**	CR STR 19-441-395A
183,5	×	**6,99**	CR STR 19-442-395A
189,9	×	**6,99**	CR STR 19-443-395A
196,2	×	**6,99**	CR STR 19-444-395A
202,6	×	**6,99**	CR STR 19-445-395A

Dimensions D		d	L	D_1	Designation
mm					–
215,3	×	**6,99**			CR STR 19-446-395A
227,9	×	**6,99**			CR STR 19-447-395A
240,7	×	**6,99**			CR STR 19-448-395A
253,3	×	**6,99**			CR STR 19-449-395A

8

rgab.ru Берг АБ bergab@ya.ru Тел. (495)-228-06-21, факс (495) 2

rgab.ru Берг АБ bergab@ya.ru Тел. (495)-228-06-21, факс (495) 22

Product index

Piston seals product table

A 80
CUT 42
GH 54
GHT 48
GL 64
M 74
MD 74
MSS 82
PEN 44
SA 84
SAARR 83
SAW 88
SM 81
SWRR 86
URG 70

Rod seals product table

AG 129
CH 152
GL 146
GS 114
S 142
SG 126
SI 136
SIL 108
SKY 130
STR 156
TIL 108
TILA 140
UN 132
TI 140
RI 158

Wiper seals product table

DK 206
GA 178
PA 174
PAD 177
PAK 175
PAK .. L 176
PO 190
PO2 190
PPUA 207
PW 202
PWB 188
PWD 186
PWF 208
PWY 184
RSW 189
SCB 180
SDR 194
SER 198

Guide ring and guide strips product table

RGR .. PF 224
RGR .. A 230
PGR .. PF 232
PGR .. A 236
SB, SBC 242

Spring activated seals

SU 246

O-rings product table

OR 288

Back-up rings product table

STR 320

rgab.ru Берг АБ bergab@ya.ru Тел. (495)-228-06-21, факс (495) 22

rgab.ru Берг АБ bergab@ya.ru Тел. (495)-228-06-21, факс (495) 2

SI conversion table

SI conversion table

Quantity	Unit	Conversion			
Length	inch foot yard mile	1 mm 1 m 1 m 1 km	0,039 inch 3,281 ft 1,094 yd 0,6214 mile	1 in 1 ft 1 yd 1 mile	25,40 mm 0,3048 m 0,9144 m 1,609 km
Velocity, speed	foot per second mile per hour	1 m/s 1 km/h	3,28 ft/s 0,6214 mile/h (mph)	1 ft/s 1 mile/h (mph)	0,30480 m/s 1,609 km/h
Force	pound-force	1 N	0,225 lbf	1 lbf	4,4482 N
Pressure, stress	pounds per square inch	1 MPa	145 psi	1 psi	6,8948 × 103 Pa
Temperature	° (degree)	Celcius	$t_C = 0{,}555\ (t_F - 32)$	Fahrenheit	$t_F = 1{,}8\ t_C + 32$

rgab.ru Берг АБ bergab@ya.ru Тел. (495)-228-06-21, факс (495) 2

rgab.ru Берг АБ bergab@ya.ru Тел. (495)-228-06-21, факс (495) 2

SKF®

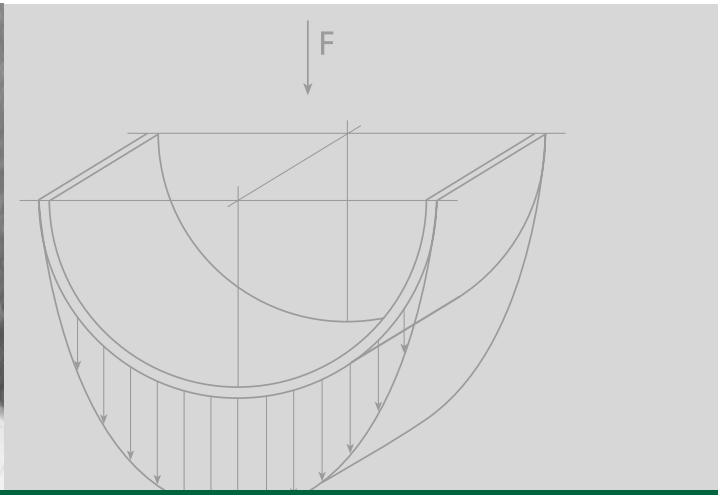

www.skf.com

rgab.ru Берг АБ bergab@ya.ru Тел. (495)-228-06-21, факс (495) 2