www.bergab.ru Берг АБ bergab@ya.ru Тел. (495)-228-06-21, факс (495) 223-3071

Introducing McGILL®

YOKE TRAKROL® BEARINGS

The McGILL® TRAKROL Bearing line has expanded to include Yoke TRAKROL Bearings in addition to the line of standard stud type TRAKROL bearings. Yoke TRAKROL bearings are designed for yoke (straddle) mounting on a shaft and utilize tapered roller bearings.

McGILL Yoke TRAKROL bearings are available in three standard configurations:

- **PCYR Series - Plain O.D.**
- **VCYR Series - V-Groove O.D.**
- **FCYR Series - Flanged O.D.**

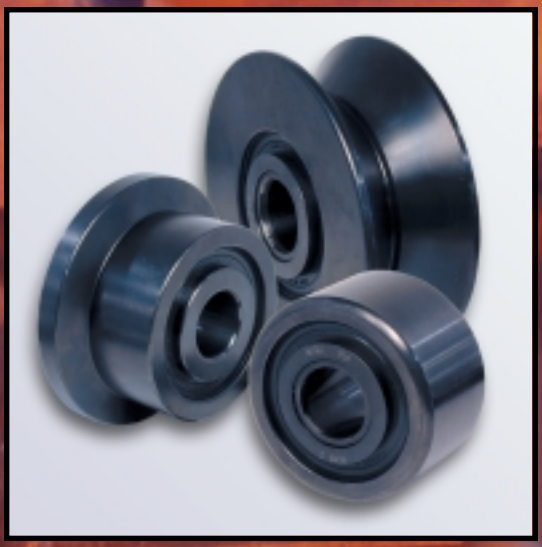

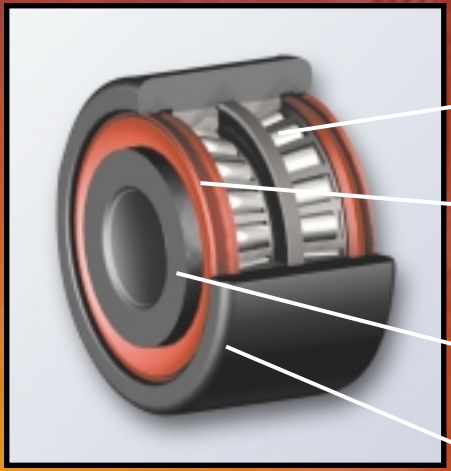

McGILL Yoke TRAKROL bearings have outstanding features for many tough applications.

- ***Tapered Roller Bearing Insert*** **provides thrust load capabilities.**
- ***Rubber Lip Seals*** **help provide superior protection against contamination and help retain grease.**
- ***Black Oxide Coating*** **helps inhibit rust and corrosion.**
- ***Heavy Walled Outer Housing*** **hardened to resist wear or fracture.**

The Emerson logo is a trademark and service mark of Emerson Electric Co.
© Emerson Power Transmission Manufacturing, L.P. or affiliates 2002. All Rights Reserved.

Emerson Power Transmission

Contact Us
www.emerson-ept.com
1-800-626-2120

EMERSON™
Industrial Automation

www.bergab.ru Берг АБ bergab@ya.ru Тел. (495)-228-06-21, факс (495) 223-3071

www.bergab.ru Берг АБ bergab@ya.ru Тел. (495)-228-06-21, факс (495) 223-3071

PCYR

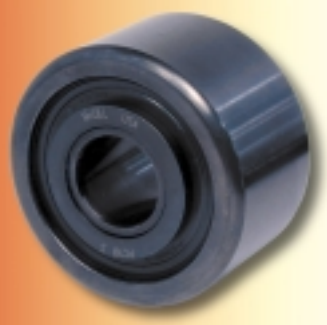

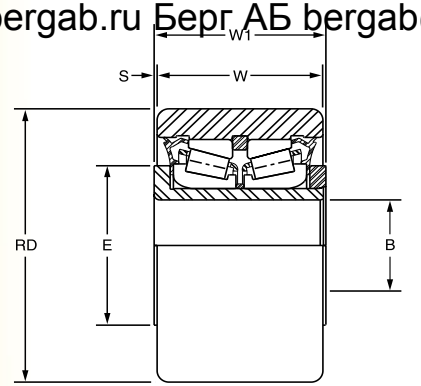

Bearing Number	Roller Dia. (RD)	Roller Width (W)	Overall Width (W1) ±.015	Bore Dia. (B) +.0007 -.0000	Shoulder Width (S)	Shoulder Dia. (E)	Radial Basic Dynamic Rating (lbs.)	Dynamic Thrust Load Rating* (lbs)	Max. Static Capacity (lbs.)
PCYR 3	3.000	1.750	1.812	1.000	1/32	1 3/4	14300	5790	20000
PCYR 3 1/4	3.250	1.750	1.812	1.000	1/32	1 3/4	14300	5790	20000
PCYR 3 1/2	3.500	2.000	2.062	1.125	1/32	2	17600	5750	27100
PCYR 4	4.000	2.250	2.312	1.250	1/32	2 1/4	17600	5750	27100
PCYR 5	5.000	2.750	2.875	1.750	1/16	3	35800	13300	56200
PCYR 6	6.000	3.250	3.375	2.250	1/16	3 1/4	35800	14200	56200

* Dynamic thrust load rating based on application of a centric, axial load. Fatigue life calculations for combined radial and thrust loading require special considerations and the McGILL Engineering Department should be contacted.

VCYR

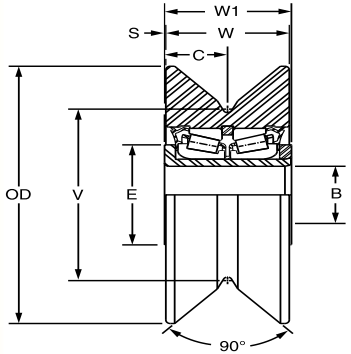

Standard Stud Bearing Number	Outside Roller Dia. (OD)	Roller Width (W)	Overall Width (W1) ±.015	Point Dia. (V)	Groove Center (C)	Bore Dia. (B) +.0007 -.0000	Shoulder Width (S)	Shoulder Dia. (E)	Radial Basic Dynamic Rating (lbs.)	Dynamic Thrust Load Rating* (lbs.)	Max. Static Capacity (lbs.)
VCYR 4 1/2	4 1/2	1.750	1.812	3	29/32	1.000	1/32	1 3/4	14300	5790	20000
VCYR 5 1/2	5 1/2	2.250	2.312	4	1 5/32	1.250	1/32	2 1/4	17600	5790	27100
VCYR 6 1/2	6 1/2	2.750	2.875	5	1 7/16	1.750	1/16	3	35800	13300	56200

* Dynamic thrust load rating based on application of a centric, axial load. Fatigue life calculations for combined radial and thrust loading require special considerations and the McGILL Engineering Department should be contacted.

FCYR

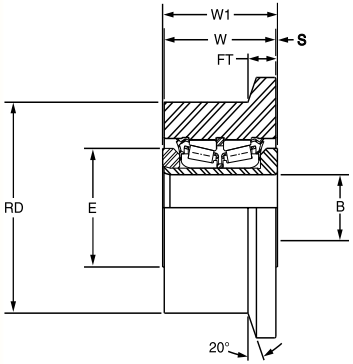

Bearing Number	Roller Dia. (RD)	Roller Width (W)	Overall Width (W1) ±.015	Flange Dia. (FD)	Flange Thickness (FT)	Bore Dia. (B) +.0007 -.0000	Shoulder Width (S)	Shoulder Dia. (E)	Radial Basic Dynamic Rating (lbs.)	Dynamic Thrust Load Rating* (lbs)	Max. Static Capacity (lbs.)
FCYR 3	3.000	1.750	1.812	3 15/16	19/32	1.000	1/32	1 3/4	14300	5790	20000
FCYR 3 1/4	3.250	1.750	1.812	4 3/16	19/32	1.000	1/32	1 3/4	14300	5790	20000
FCYR 3 1/2	3.500	2.000	2.062	4 7/16	19/32	1.125	1/32	2	17600	5750	27100
FCYR 4	4.000	2.250	2.312	4 15/16	19/32	1.250	1/32	2 1/4	17600	5750	27100
FCYR 5	5.000	2.750	2.875	5 5/16	23/32	1.750	1/16	3	35800	13300	56200
FCYR 6	6.000	3.250	3.375	6 15/16	23/32	2.250	1/16	3 1/4	35800	14200	56200

* Dynamic thrust load rating based on application of a centric, axial load. Fatigue life calculations for combined radial and thrust loading require special considerations and the McGILL Engineering Department should be contacted.

For Ordering Information Contact Your Authorized McGILL Distributor or Emerson Power Transmission Customer Service at 1-800-626-2120

APPLICATION CONSIDERATIONS

The proper selection and application of power transmission products and components, including the related area of product safety, is the responsibility of the customer. Operating and performance requirements and potential associated issues will vary appreciably depending upon the use and application of such products and components. The scope of the technical and application information included in this publication is necessarily limited. Unusual operating environments and conditions, lubrication requirements, loading supports, and other factors can materially affect the application and operating results of the products and components and the customer should carefully review its requirements. Any technical advice or review furnished by Emerson Power Transmission Corp. and its divisions with respect to the use of products and components is given in good faith and without charge, and Emerson assumes no obligation or liability for the advice given, or results obtained, all such advice and review being given and accepted at customer's risk.

For a copy of our **Standard Terms and Conditions of Sale, Disclaimers of Warranty, Limitation of Liability and Remedy,** please contact McGill customer service, 1-800-626-2120. These terms and conditions of sale, disclaimers and limitations apply to any person who may buy, acquire or use an Emerson Power Transmission Corp. product referred to herein, including any person who buys from a licensed distributor of these branded products.

McGILL
www.emerson-ept.com

Form # 8795 • 06/02 • Printed in U.S.A.

www.bergab.ru Берг АБ bergab@ya.ru Тел. (495)-228-06-21, факс (495) 223-3071