Linear actuators

MAGFORCE ASM

Description
Magforce linear actuators type ASM are specially suitable for use in vehicles and agricultural machines and industrial applications due to their DC motor and compact, robust design. Due to the performance of the permanent magnet motor (12/24 VDC) the speed is slightly dependent on the load. The stroke is restricted by internal mechanical stops. Magforce actuators have an integrated friction clutch to protect the actuator and the application from overload. The use of the internal mechanical end stops as stroke limit should be avoided. If it cannot be avoided that the actuator runs into the end stops, the use of end switches (accessories or external) is imperative. The motor, however, should be prevented from operating for long periods of time against the end stops. The duty cycle stated above relates to an ambient temperature of +40 °C and an interval operating time of 10 minutes. The technical data mentioned refer to operation under nominal load. The standard stroke is 200 mm, but lengths up to 700 mm are available on request, whereby the body length is increased proportionally. With increasing push forces the safety factor decreases. In order to maintain the recommended safety factor of S=4 an additional guide bearing can be fitted, which extends the body length by 50 mm.

Electrical Connection
Electrical connections are extremely simple because there are no built-in limit switch. Reversing of the motor is achieved by changing poles via push button or relay. A direct change of direction is not allowed be avoided because of the arising inertia forces. The push button or switch must return automatically to the neutral position when it is released so that the motor does not run against the end stops for longer than necessary. Alternatively external limit switches can be supplied on request which switch off the motor in the end positions. When using a battery make sure that its capacity is sufficient.

Installation
The actuator is fixed to the rear clevis and the push tube. Turning of the push tube is generally possible. Ensure that the push tube cannot turn and that the load on the push tube is axial only. Side loads on the push tube must be avoided. The push tube must not be subjected to bending loads and motor and levers should be aligned. Make sure that the electric cables are not damaged by squeezing, bending or stretching.

Maintenance
The linear actuator has sufficient lubricaten reserve and is almost maintance-free. Only the push tube should be cleaned and lightly greased from time to time. The service life depends very much on the corresponding application (for example, temperature, conditions regarding run, force and cycles, as well as environmental influences) and must be found out in case of need. Defective motors may be repaired only in our factory for safety reasons.

Remark
If our actuators are used for applications where persons could be directly or indirectly endangered, we have to be contacted in order to discuss safety precautions.

Technical data:	Unit	ASM 1010	ASM 2030	ASM 3030	ASM 4050
Push/pull force	N	1 000	2 000	3 000	4 000
Static load	N	6 000	6 000	6 000	6 000
Speed (12/24 V)	mm/s	48	18	8	5
Stroke length	mm	100 to 700	100 to 700	100 to 700	100 to 700
Voltage	V	12/24	12/24	12/24	12/24
Power consumption	W	192/168	168/144	168/144	168
Current consumption 12 V	A	16	14	12	12
Current consumption 24 V	A	8	6	6	6
Duty cycle (SD 10 min.)	%	10	10	10	10
Ambient temperature	°C	-10 to +40	-10 to +40	-10 to +40	-10 to +40
Protection/insulation class	-	III/B	III/B	III/B	III/B
Protection class	IP	44	44	44	44
Weight (with 200 mm stroke)	kg	5,0	5,0	5,0	5,0

Accessories
- limit switches 1043,0210
- friction brake for pull/push force 1028,7851
- potentiometer
- additional bushing
- stainless steel push tube

Special versions
Bellows
As protection against environmental influences such as contamination, dust steam, etc., bellows are available up to a stroke length of 200 mm. These bellows must be ordered together with the actuator as thus the body length is increased by 50 mm, i.e. bellows cannot be fittered later on. They are not necessary as protection against water as our actuators already correspond to protection class IP44. For an extra price a push tube made of stainless steel can be supplied.

Extended motor shaft
For manual operation the actuator can be equipped with an extended motor shaft with flat side. Position and dimensions see drawing.

Special gear box
Besides the standard gear box actuators can be supplied with a gear box with fixing eye turned by 90° or with rear screw fixing.

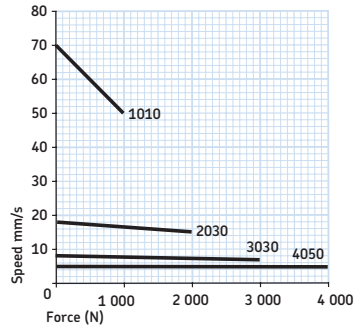

Diagram speed

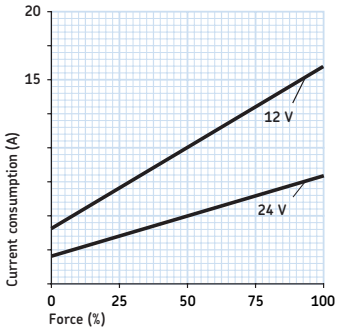

Diagram current consumption

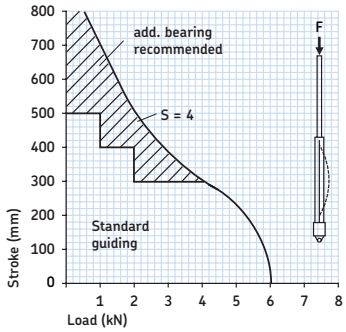

Diagram bending of spindle

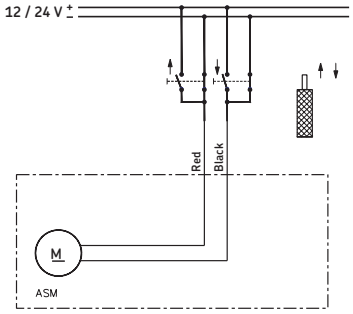

Wiring diagram

S = safety factor Euler 3

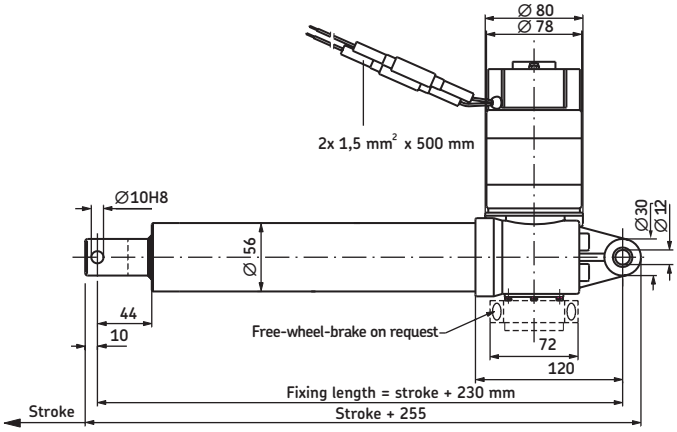

Side view

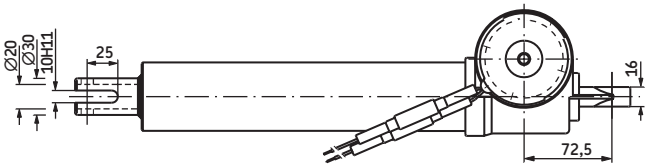

Top view

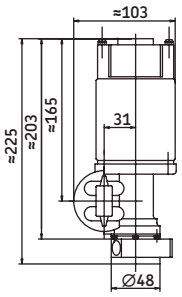

Rear view

Magnetic Elektromotoren AG
CH-4410 Liestal, Switzerland
Tel +41 61 925 4111, Fax +41 61 921 3704
E-mail magnetic.switzerland@skf.com

Publication **L5321,2130EN.0/07.01**

Linear actuators

MAGFORCE DSP

Description
Magforce linear actuators type DSP are specially suitable for industrial applications due to their compact and robust design. The stroke is restricted by internal mechanical stops. Magforce actuators have an integrated friction clutch to protect the actuator and the application from overload. The internal mechanical end stops must not be used as stroke limit. If it cannot be avoided that the actuator runs into the end stops, the use of end switches (accessories or external) is imperative. The motor, however, should be prevented from operating for long periods of time against the end stops. The duty cycle stated below relates to an ambient temperature of +40 °C and an interval operating time of 10 minutes. The technical data mentioned refer to operation under nominal load. A thermal switch incorporated in the motor winding cuts off the power supply at 140 °C thus protecting the motor from overheating and resets itself again after cooling. The standard stroke is 200 mm, but lengths up to 700 mm are available on request, whereby the body length is increased proportionally. With increasing push forces the safety factor decreases. In order to maintain the recommended safety factor of S=4 an additional guide bearing can be fitted, which extends the body length by 50 mm.

Electrical Connection
Electrical connections are extremely simple because there are no built-in limit switch. Reversing of the motor is achieved by changing poles via push button or relay. A direct change of direction should be avoided because of the arising inertia forces. The push button or switch must return automatically to the neutral position when it is released so that the motor does not run against the end stops for longer than necessary. Alternatively external limit switche can be supplied on request which switch off the motor in the end positions. For wiring diagram see inside terminal box. Do not connect motors in parallel. They must be connected according to a special diagram.

Installation
The actuator is fixed to the rear clevis and the push tube. Turning of the push tube is generally possible. Ensure that the push tube cannot turn and that the load on the push tube is axial only. Side loads on the push tube must be avoided The push tube must not be subjected to bending loads and motor and levers should be aligned. Make sure that the electric cables are not damaged by squeezing, bending or stretching. Customers must ensure that the cable entry point is tight to guarantee protection class IP54.

Maintenance
The linear actuator has sufficient lubricaten reserve and is almost maintance-free. Only the push tube should be cleaned and lightly greased from time to time. The service life depends very much on the corresponding application (for example, temperature, conditions regarding run, force and cycles, as well as environmental influences) and must be found out in case of need. Defective motors may be repaired only in our factory for safety reasons.

Remark
If our actuators are used for applications where persons could be directly or indirectly endangered, we have to be contacted in order to discuss safety precautions.

Technical data:	Unit	DSP 1010	DSP 2530	DSP 3250	DSP 4550
Push/pull force	N	1 000	2 500	3 200	4 500
Static load	N	6 000	6 000	6 000	6 000
Speed	mm/s	52	17	10	5
Stroke length	mm	100 to 700	100 to 700	100 to 700	100 to 700
Voltage	VAC/50 Hz	3x400	3x400	3x400	3x400
Power consumption	W	230	260	260	280
Current consumption	A	0,6	0,6	0,6	0,6
Duty cycle (SD 10 min.)	%	40	40	40	40
Ambient temperature	°C	-10 to +40	-10 to +40	-10 to +40	-10 to +40
Protection/insulation class	-	I/F	I/F	I/F	I/F
Protection class	IP	54	54	54	54
Weight (with 200 mm stroke)	kg	5,5	5,5	5,5	5,5

magnetic

Linear actuators MAGFORCE DSP

Special versions

Bellows

As protection against environmental influences such as contamination, dust steam, etc., bellows are available up to a stroke length of 200 mm. These bellows must be ordered together with the actuator as thus the body length is increased by 50 mm, i.e. bellows cannot be fittered later on. They are not necessary as protection against water as our actuators already correspond to protection class IP54. For an extra price a push tube made of stainless steel can be supplied.

Extended motor shaft

For manual operation the actuator can be equipped with an extended motor shaft with flat side. Position and dimensions see drawing.

Special gear box

Besides the standard gear box actuators can be supplied with a gear box with fixing eye turned by 90° or with rear screw fixing.

Accessories

- limit switches 1043.0210
- friction brake for pull/push force 1028,7851
- potentiometer
- additional bushing
- stainless steel push tube
- special voltages

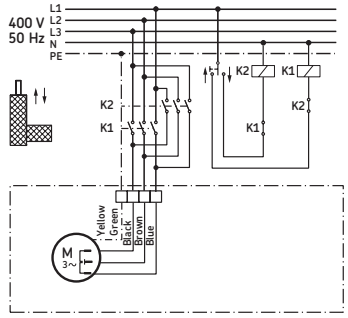

Wiring diagram

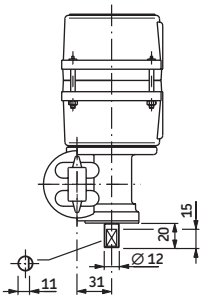

Extended motor shaft

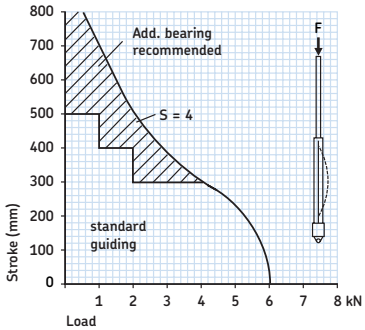

Diagram bending of spindle

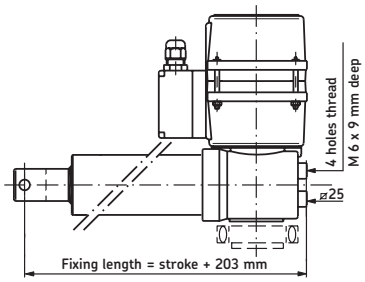

Rear screw fixing

S = safety factor Euler 3

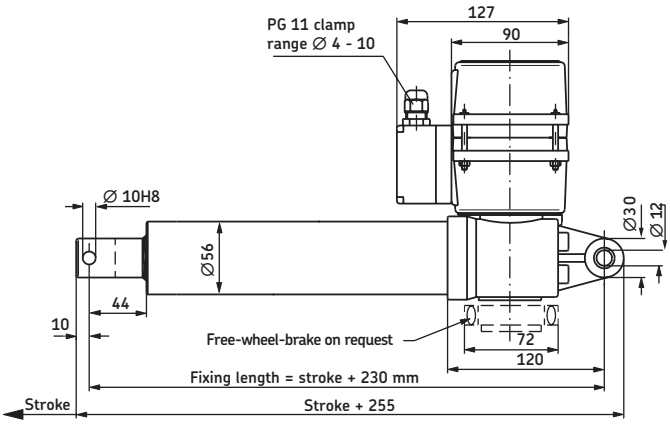

Side view

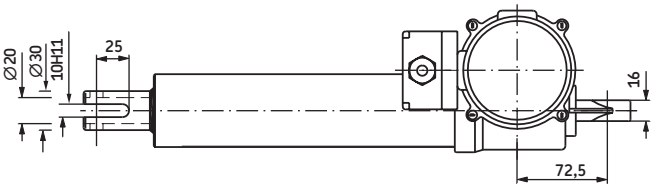

Top view

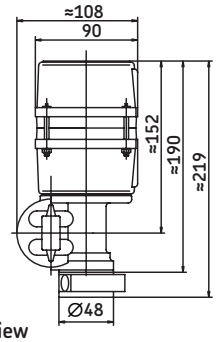

Rear view

Magnetic Elektromotoren AG
CH-4410 Liestal, Switzerland
Tel +41 61 925 4111, Fax +41 61 921 3704
E-mail magnetic.switzerland@skf.com

Publication **L5321,2120EN.0/07.01**

SKF

www.bergab.ru Берг АБ bergab@ya.ru Тел. (495)-228-06-21, факс (495) 223-3071

Linear actuators

MAGFORCE WSP

Description
Magforce linear actuators type WSP are specially suitable for industrial applications due to their compact and robust design. The stroke is restricted by internal mechanical stops. Magforce actuators have an integrated friction clutch to protect the actuator and the application from overload. The internal mechanical end stops must not be used as stroke limit. If it cannot be avoided that the actuator runs into the end stops, the use of end switches (accessories or external) is imperative. The motor, however, should be prevented from operating for long periods of time against the end stops. The duty cycle stated below relates to an ambient temperature of +40 °C and an interval operating time of 10 minutes. The technical data mentioned refer to operation under nominal load.
A thermal switch incorporated in the motor winding cuts off the power supply at 140 °C thus protecting the motor from overheating and resets itself again after cooling. The standard stroke is 200 mm, but lengths up to 700 mm are available on request, whereby the body length is increased proportionally. With increasing push forces the safety factor decreases. In order to maintain the recommended safety factor of S=4 an additional guide bearing can be fitted, which extends the body length by 50 mm.

Electrical Connection
Electrical connections are extremely simple because there are no built-in limit switch. Reversing of the motor is achieved by changing poles via push button or relay. A direct change of direction should be avoided because of the arising inertia forces. The push button or switch must return automatically to the neutral position when it is released so that the motor does not run against the end stops for longer than necessary. Alternatively external limit switches can be supplied on request which switch off the motor in the end positions. For wiring diagram see inside terminal box. Do not connect motors in parallel. They must be connected according to a special diagram.

Installation
The actuator is fixed to the rear clevis and push tube. Turning of the push tube is generally possible. Ensure that the push tube cannot turn and that the load on the push tube is axial only. Side loads on the push tube must be avoided. The push tube must not be subjected to bending loads and motor and levers should be aligned. Make sure that the electric cables are not damaged by squeezing, bending or stretching. Customers must ensure that the cable entry point is tight to guarantee protection class IP54.

Maintenance
The linear actuator has sufficient lubricaten reserve and is almost maintance-free. Only the push tube should be cleaned and lightly greased from time to time. The service life depends very much on the corresponding application (for example, temperature, conditions regarding run, force and cycles, as well as environmental influences) and must be found out in case of need. Defective motors may be repaired only in our factory for safety reasons.

Remark
If our actuators are used for applications where persons could be directly or indirectly endangered, we have to be contacted in order to discuss safety precautions.

Technical data:	Unit	WSP 510	WSP 1030	WSP 1550	WSP 2650
Push/pull force	N	500	1 000	1 500	2 600
Static load	N	6 000	6 000	6 000	6 000
Speed	mm/s	57	19	11	5
Stroke length	mm	100 to 700	100 to 700	100 to 700	100 to 700
Voltage	VAC/50 Hz	1x230	1x230	1x230	1x230
Power consumption	W	220	200	200	230
Current consumption	A	1,1	1,0	1,0	1,1
Duty cycle (SD 10 min.)	%	25	25	25	25
Ambient temperature	°C	-10 to +40	-10 to +40	-10 to +40	-10 to +40
Protection/insulation class	-	I/F	I/F	I/F	I/F
Protection class	IP	54	54	54	54
Weight (with 200 mm stroke)	kg	5,5	5,5	5,5	5,5

magnetic

Linear actuators MAGFORCE WSP

Special versions

Bellows

As protection against environmental influences such as contamination, dust steam, etc., bellows are available up to a stroke length of 200 mm. These bellows must be ordered together with the actuator as thus the body length is increased by 50 mm, i.e. bellows cannot be fittered later on. They are not necessary as protection against water as our actuators already correspond to protection class IP54. For an extra price a push tube made of stainless steel can be supplied.

Extended motor shaft

For manual operation the actuator can be equipped with an extended motor shaft with flat side. Position and dimensions see drawing.

Special gear box

Besides the standard gear box actuators can be supplied with a gear box with fixing eye turned by 90° or with rear screw fixing.

Accessories

- limit switches 1043,0209
- friction brake for pull/push force 1028,7851
- potentiometer
- additional bushing
- stainless steel push tube
- special voltages

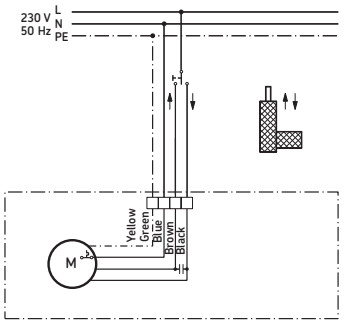

Wiring diagram

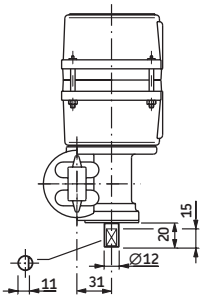

Extended motor shaft

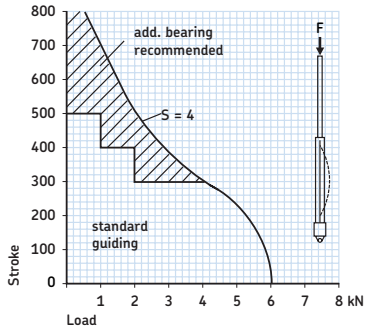

Diagram bending of spindle

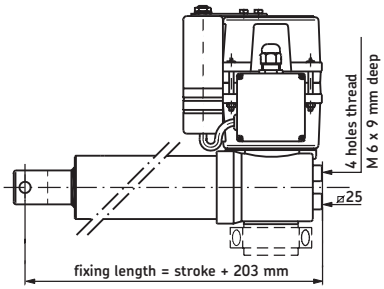

Rear screw fixing

S = safety factor Euler 3

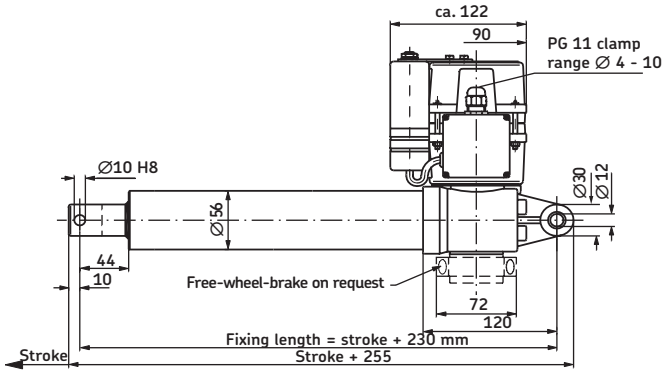

Side view

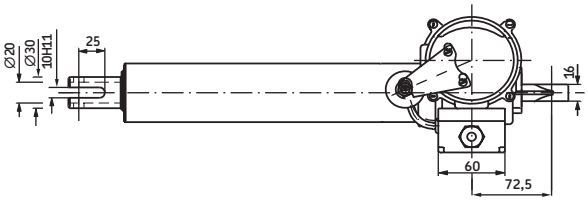

Top view

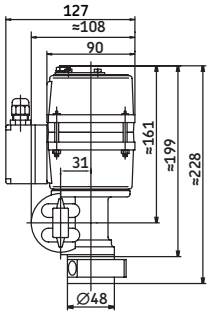

Rear view

Magnetic Elektromotoren AG
CH-4410 Liestal, Switzerland
Tel +41 61 925 4111, Fax +41 61 921 3704
E-mail magnetic.switzerland@skf.com

Publication **L5321,2110EN.0/07.01**

SKF

www.bergab.ru Берг АБ bergab@ya.ru Тел. (495)-228-06-21, факс (495) 223-3071

Linear actuators

MAGFORCE SKS/SKA

Description
Thanks to their compact and robust design, Magforce linear actuators type SKS are especially suitable for industrial applications. The actuator can be mounted in any position. It is equipped with a ball screw and an integrated magnetic brake which ensures precise shut-off and self-locking. Magforce actuators incorporate a friction clutch to protect the actuator and the application from overload. The internal mechanical end stops must not be used as stroke limit. If it cannot be avoided that the actuator runs against the end stops, the use of end switches (accessories or external) is imperative. Suitable circuitry must prevent the motor from operating against the end stops for long periods of time. The duty cycle stated below relates to an ambient temperature of +40 °C and an interval operating time of 10 minutes. It is partially load-dependent. The technical data mentioned refer to operation under nominal load. A thermal switch protects the motor winding from overheating and cuts off the power supply when the winding temperature reaches 120 °C and switches on again after cooling. Longer strokes of up to 700 mm are available on request, whereby the body dimensions increase proportionally. The safety factor decreases with higher push loads.

Electrical Connection
Electrical connection are extremely simple because there are no built-in limit switch. Reverse is achieved by changing poles via push button or relay. However, a direct change of direction must be avoided because of the resulting inertia forces and to protect the switch elements. The push button or switch must return automatically to the neutral position when it is released so that the motor does not run against the end stops for longer periods. Alternatively external limit switches must be used to switch off the motor in the end positions. The electrical connection should follow the wiring diagram on the back. Motors must not be connected in parallel but according to a special diagram.

Installation
The actuator is attached via the rear and front clevis. Turning of the push tube is generally possible. When using the limit switch with SKA actuators, the push tube must not be turned again after limit switch adjustment. No lateral forces must act on the push tube, whatever the orientation and the actuator must not be installed off-centre. The electric cables must not be damaged by squeezing, bending or stretching. The cable entry point must be a tight fit in order to guarantee protection class IP54.

Maintenance
The linear actuator has sufficient lubrication reserve and is almost maintenance-free. Only the push tube should be cleaned and lightly greased from time to time. The service life depends very much on the corresponding application (e.g. temperatures, conditions regarding run, force and cycles as well as environmental influences) and must be determined according to need. After reaching the end of the given life time, we recommend relubrication at our factory. For safety reasons, defective motors may only be repaired at our factory.

Remark
If our actuators are used for applications where persons could be directly or indirectly endangered, please contact us in order to discuss safety precautions.

Techncal data:	Unit	SKS 15404	SKS 20406	SKS 25412	SKS 30423
Push force	kN	15	20	25	30
Static load	kN	40	40	40	40
Speed	mm/s	45	33	17	9
Stroke length	mm	100 to 700	100 to 700	100 to 700	100 to 700
Voltage	VAC/50 Hz	3x400	3x400	3x400	3x400
Power consumption	W	1 700	1 650	1 300	1 200
Current consumption	A	3,3	3,5	2,8	3,0
Duty cycle (SD 10 min.)	%	10	10	10	10
Ambient temperature	°C	-10 to +40	-10 to +40	-10 to +40	-10 to +40
Protection/insulation class	-	I/E	I/E	I/E	I/E
Protection class	IP	54	54	54	54
Weight (with 200 mm stroke)	kg	30,0	30,0	30,0	30,0

Accessories

- back-up nut
- extended shaft

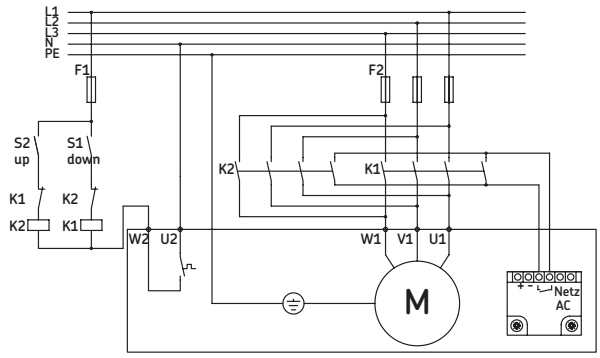

Wiring diagram

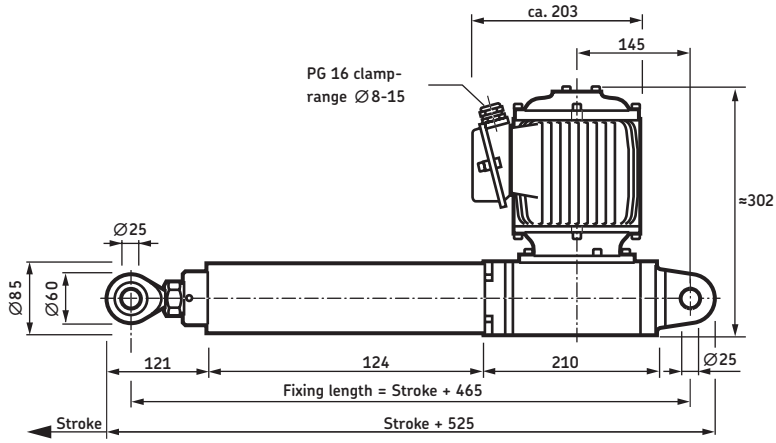

Side view

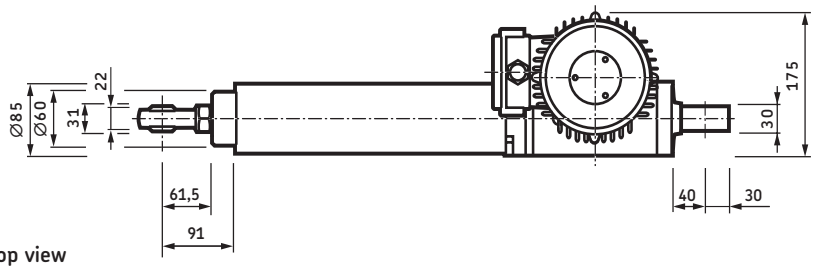

Top view

Magnetic Elektromotoren AG
CH-4410 Liestal, Switzerland
Tel +41 61 925 4111, Fax +41 61 921 3704
E-mail magnetic.switzerland@skf.com

Publication **L5321,2380EN.0/07.01**

www.bergab.ru Берг АБ bergab@ya.ru Тел. (495)-228-06-21, факс (495) 223-3071

Linear actuators

MAGFORCE STN

Description
Magforce linear actuators type STN are specially suitable for industrial applications due to their compact and robust design. The stroke is restricted by internal mechanical stops. Magforce actuators have an integrated friction clutch to protect the actuator and the application from overload. The STN actuator is equipped with an integrated magnetic brake which ensures precise shut-off and self-locking. The internal mechanical end stops must not be used as stroke limit. If it cannot be avoided that the actuator runs into the end stops, the use of end switches (accessories or external) is imperative. The motor, however, should be prevented from operating for long periods of time against the end stops. The duty cycle stated above relates to an ambient temperature of +40 °C and an interval operating time of 10 minutes. The technical data mentioned refer to operation under nominal load. A thermal switch incorporated in the motor winding cuts off the power supply at 120 °C thus protecting the motor from overheating and resets itself again after cooling. The standard stroke is 200 mm, but lengths up to 700 mm are available on request, whereby the body length is increased proportionally. With increasing push forces the safety factor decreases. In order to maintain the recommended safety factor of S=4 an additional guide bearing can be fitted, which extends the body length by 50 mm.

Electrical Connection
Electrical connections are extremely simple because there are no built-in limit switch. Reversing of the motor is achieved by changing poles via push button or relay. A direct change of direction should be avoided because of the arising inertia forces. The push button or switch must return automatically to the neutral position when it is released so that the motor does not run against the end stops for longer than necessary. Alternatively external limit switches can be supplied on request which switch off the motor in the end positions. For wiring diagram see inside terminal box. Do not connect motors in parallel. They must be connected according to a special diagram.

Installation
The actuator is attached via the rear and front clevis. An adapter supplied optionally as well as the fork head can be fixed to the push tube. Turning of the push tube is generally possible. When using the limit switch with STN actuators, the push tube must not be turned again after limit switch adjustment. Side loads on the push tube must be avoided. The push tube must not be subjected to bending loads and motor and levers should be aligned. Make sure that the electric cables are not damaged by squeezing, bending or stretching. Customers must ensure that the cable gland is tight to guarantee protection class IP54.

Maintenance
The linear actuator has sufficient lubricaten reserve and is almost maintance-free. Only the push tube should be cleaned and lightly greased from time to time. The service life depends very much on the corresponding application (for example, temperature, conditions regarding run, force and cycles, as well as environmental influences) and must be found out in case of need. Defective motors may be repaired only in our factory for safety reasons.

Remark
If our actuators are used for applications where persons could be directly or indirectly endangered, we have to be contacted in order to discuss safety precautions.

Techncal data:	Unit	STN 5007	STN 10007	STN 12010	STN 15015
Push force	kN	5	10	12	15
Static load	kN	16	16	16	16
Speed	mm/s	25	12	9	6
Stroke length	mm	100 to 700	100 to 700	100 to 700	100 to 700
Voltage	VAC/50 Hz	3x400	3x400	3x400	3x400
Power consumption	W	800	800	800	800
Current consumption	A	2,3	3,2	3,2	3,2
Duty cycle (SD 10 min.)	%	10	25	25	25
Ambient temperature	°C	-10 to +40	-10 to +40	-10 to +40	-10 to +40
Protection/insulation class	-	I/E	I/E	I/E	I/E
Protection class	IP	54	54	54	54
Weight (with 200 mm stroke)	kg	15,6	15,6	15,6	15,6

magnetic

Linear actuators MAGFORCE STN

Accessories

- adapter 1031,0106
- fork head complete 1051,9038
- limit switches complete 0 ... 370 mm stroke lengths 1043,0268
- limit switches complete 100 ... 445 mm stroke lengths 1043,0252
- limit switches complete 200 ... 740 mm stroke lengths 1043,0266
- potentiometer 475 mm stroke lengths 1 kΩ standard 1063,0011
- potentiometer max. 944 mm stroke lengths 1 kΩ standard 1063,0012
- other potentiometer values on request
- extended motor shaft
- back-up nut

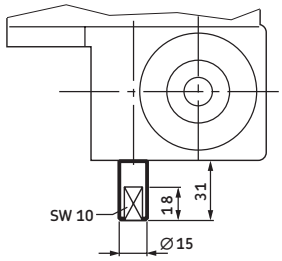

Extended motor shaft

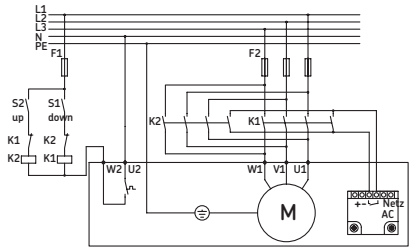

Wiring diagram

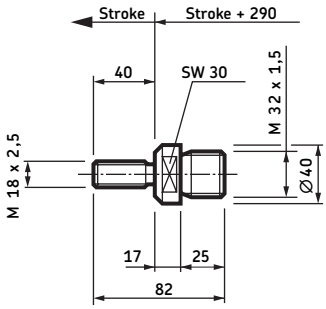

Adapter

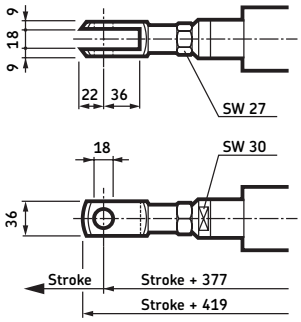

Fork head

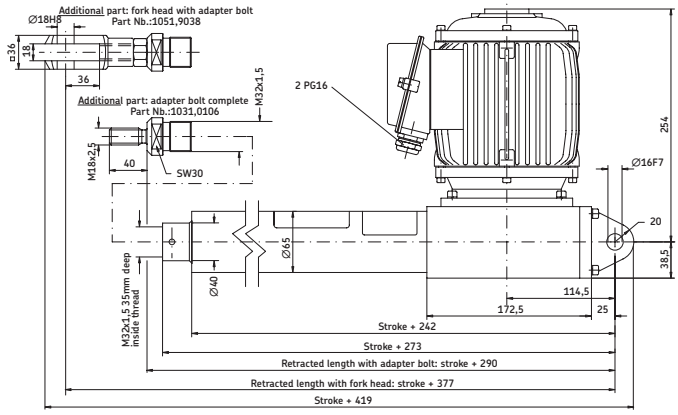

Side view

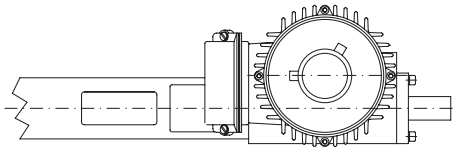

Top view

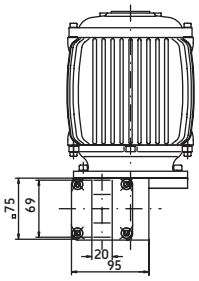

Rear view

Magnetic Elektromotoren AG
CH-4410 Liestal, Switzerland
Tel +41 61 925 4111, Fax +41 61 921 3704
E-mail magnetic.switzerland@skf.com

Publication **L5321,2345EN.0/07.01**

SKF

www.bergab.ru Берг АБ bergab@ya.ru Тел. (495)-228-06-21, факс (495) 223-3071

Linear actuators

MAGFORCE STG

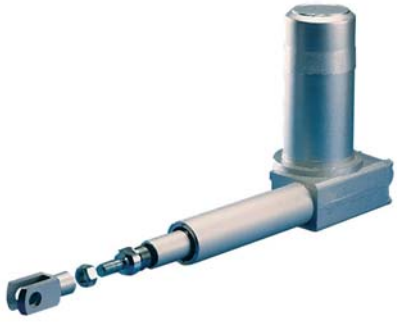

Description
Magforce linear actuators type STG are specially suitable for use in vehicles, agricultural machines and industrial applications due to their DC motor and compact, robust design. Due to the performance of the permanent magnet motor (24 VDC) the speed is slightly dependent on the load. A thermal switch incorporated in the motor cuts off the power supply in the event of overheating and resets itself again after cooling. The stroke is restricted by internal mechanical stops. Magforce actuators have an integrated friction clutch to protect the actuator and the application from overload. The internal mechanical end stops must not be used as stroke limit. If it cannot be avoided that the actuator runs into the end stops, the use of end switches (accessories or external) is imperative. The motor, however, should be prevented from operating for long periods of time against the end stops. The duty cycle stated below relates to an ambient temperature of +40 °C and an interval operating time of 10 minutes. The technical data mentioned refer to operation under nominal load. The standard stroke is 200 mm, but lengths up to 700 mm are available on request, whereby the body length is increased proportionally. With increasing push forces the safety factor decreases. In order to maintain the recommended safety factor of S=4 an additional guide bearing can be fitted, which extends the body length by 50 mm.

Electrical Connection
Electrical connections are extremely simple because there are no built-in limit switch. Reversing of the motor is achieved by changing poles via push button or relay. A direct change of direction should be avoided because of the arising inertia forces. The push button or switch must return automatically to the neutral position when it is released so that the motor does not run against the end stops for longer than necessary. Alternatively external limit switches can be supplied on request which switch off the motor in the end positions. When using a battery make sure that its capacity is sufficient.

Installation
The actuator is attached via the rear and front clevis. An adapter supplied optionally as well as the fork head can be fixed to the push tube. Turning of the push tube is generally possible. When using the limit switch with STG actuators, the push tube must not be turned again after limit switch adjustment. Side loads on the push tube must be avoided. The push tube must not be subjected to bending loads and motor and levers should be aligned. Make sure that the electric cables are not damaged by squeezing, bending or stretching. Customers must ensure that the cable entry point is tight to guarantee protection class IP54.

Maintenance
The linear actuator has sufficient lubricaten reserve and is almost maintance-free. Only the push tube should be cleaned and lightly greased from time to time. The service life depends very much on the corresponding application (for example, temperature, conditions regarding run, force and cycles, as well as environmental influences) and must be found out in case of need. Defective motors may be repaired only in our factory for safety reasons.

Remark
If our actuators are used for applications where persons could be directly or indirectly endangered, we have to be contacted in order to discuss safety precautions.

Techncal data:	Unit	STG 10007	STG 12010	STG 15020	STG 15040
Push/pull force	kN	10	12	15	15
Static load	kN	16	16	16	16
Speed	mm/s	14	11	5	3
Stroke length	mm	100 to 700	100 to 700	100 to 700	100 to 700
Voltage	VDC	24	24	24	24
Power consumption	W	840	840	768	528
Current consumption	A	35	35	32	22
Duty cycle (SD 10 min.)	%	10	10	10	10
Ambient temperature	°C	-10 to +40	-10 to +40	-10 to +40	-10 to +40
Protection/insulation	-	III/E	III/E	III/E	III/E
Protection class	IP	54	54	54	54
Weight (with 200 mm stroke)	kg	14,6	14,6	14,6	14,6

magnetic

Linear actuators MAGFORCE STG

Accessories

- adapter 1031,0106
- fork head complete 1051,9038
- limit switches complete
  0 ... 370 mm stroke lengths
  1043,0268
- limit switches complete
  100 ... 445 mm stroke lengths
  1043,0252
- limit switches complete
  200 ... 740 mm stroke lengths
  1043,0266
- potentiometer 475 mm stroke lengths
  1 kΩ standard 1063,0011
- potentiometer max. 944 mm
  stroke lengths
  1 kΩ standard 1063,0012
- other potentiometer values on request
- extended motor shaft
- magnetic brake
- back-up nut

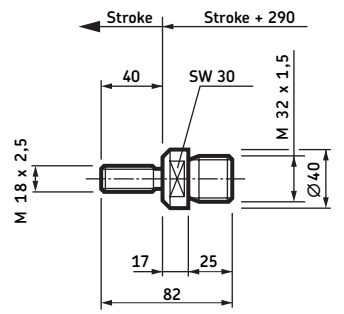

Adapter

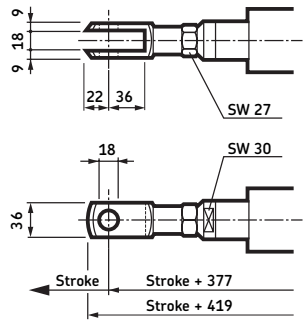

Fork head

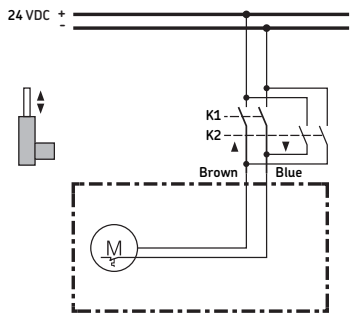

Wiring diagram

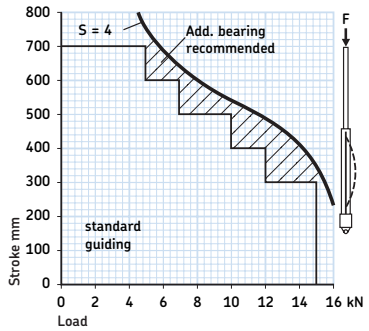

Diagram bending of spindle

S = safety factor Euler 3

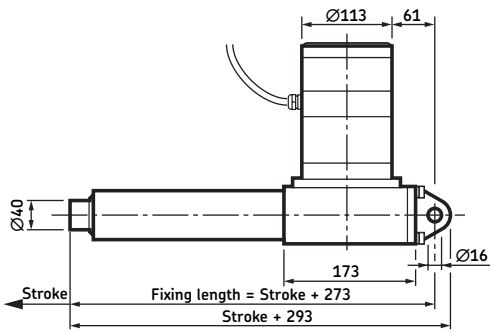

Side view

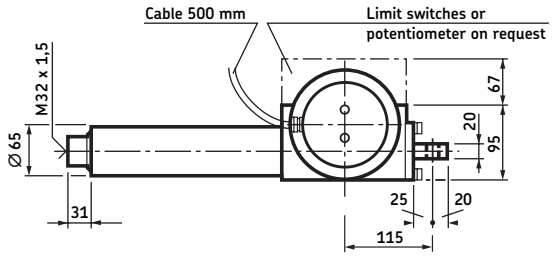

Top view

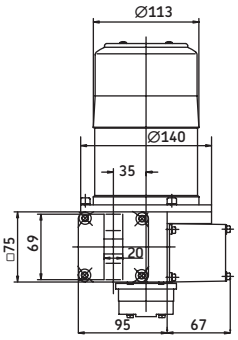

Rear view

Magnetic Elektromotoren AG
CH-4410 Liestal, Switzerland
Tel +41 61 925 4111, Fax +41 61 921 3704
E-mail magnetic.switzerland@skf.com

Publication **L5321,2330EN.0/07.01**

SKF

www.bergab.ru Берг АБ bergab@ya.ru Тел. (495)-228-06-21, факс (495) 223-3071

Linear actuators

MAGFORCE STD

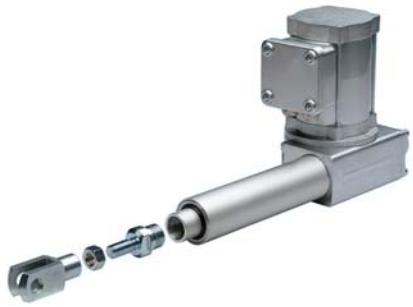

Description
Magforce linear actuators type STD are specially suitable for industrial applications due to their compact and robust design. The stroke is restricted by internal mechanical stops. Magforce actuators have an integrated friction clutch to protect the actuator and the application from overload. The internal mechanical end stops must not be used as stroke limit. If it cannot be avoided that the actuator runs into the end stops, the use of end switches (accessories or external) is imperative. The motor, however, should be prevented from operating for long periods of time against the end stops. The duty cycle stated below relates to an ambient temperature of +40 °C and an interval operating time of 10 minutes. The technical data mentioned refer to operation under nominal load.
A thermal switch incorporated in the motor winding cuts off the power supply at 100 °C thus protecting the motor from overheating and resets itself again after cooling. The standard stroke is 200 mm, but lengths up to 700 mm are available on request,
whereby the body length is increased proportionally. With increasing push forces the safety factor decreases. In order to maintain the recommended safety factor of S=4 an additional guide bearing can be fitted, which extends the body length by 50 mm.

Electrical Connection
Electrical connections are extremely simple because there are no built-in limit switch. Reversing of the motor is achieved by changing poles via push button or relay. A direct change of direction should be avoided because of the arising inertia forces. The push button or switch must return automatically to the neutral position when it is released so that the motor does not run against the end stops for longer than necessary. Alternatively external limit switches can be supplied on request which switch off the motor in the end positions. For wiring diagram see inside terminal box. Do not connect motors in parallel. They must be connected according to a special diagram.

Installation
The actuator is attached via the rear and front clevis. An adapter supplied optionally as well as the fork head can be fixed to the push tube. Turning of the push tube is generally possible. When using the limit switch with STD actuators, the push tube must be avoided. The push tube must not be subjected to bending loads and motor and levers should be aligned. Make sure that the electric cables are not damaged by squeezing, bending or stretching. Customers must ensure that the cable entry point is tight to guarantee protection class IP54.

Maintenance
The linear actuator has sufficient lubricaten reserve and is almost maintance-free. Only the push tube should be cleaned and lightly greased from time to time. The service life depends very much on the corresponding application (for example, temperature, conditions regarding run, force and cycles, as well as environmental influences) and must be found out in case of need. Defective motors may be repaired only in our factory for safety reasons.

Remark
If our actuators are used for applications where persons could be directly or indirectly endangered, we have to be contacted in order to discuss safety precautions.

Technical data:	Unit	STD 10007	STD 12010	STD 15020	STD 15040
Push/pull force	kN	10	12	15	15
Static load	kN	16	16	16	16
Speed	mm/s	10	8	4	2
Stroke length	mm	100 to 700	100 to 700	100 to 700	100 to 700
Voltage	VAC/50 Hz	3x400	3x400	3x400	3x400
Power consumption	W	920	800	700	500
Current consumption	A	1,8	1,7	1,6	1,4
Duty cycle (SD 10 min.)	%	25	10	10	10
Ambient temperature	°C	-10 to +40	-10 to +40	-10 to +40	-10 to +40
Protection/insulation	-	I/E	I/E	I/E	I/E
Protection class	IP	54	54	54	54
Weight (with 200 mm stroke)	kg	14,6	14,6	14,6	14,6

magnetic

Linear actuators MAGFORCE STD

Accessories

- adapter 1031,0106
- fork head complete 1051,9038
- limit switches complete 0 ... 370 mm stroke lengths 1043,0268
- limit switches complete 100 ... 445 mm stroke lengths 1043,0252
- limit switches complete 200 ... 740 mm stroke lengths 1043,0266
- potentiometer 475 mm stroke lengths 1 kΩ standard 1063,0011
- potentiometer max. 944 mm stroke lengths 1 kΩ standard 1063,0012
- other potentiometer values on request
- extended motor shaft
- magnetic brake
- back-up nut

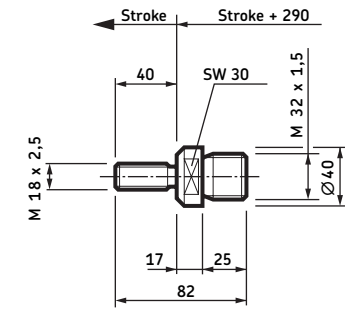

Adapter

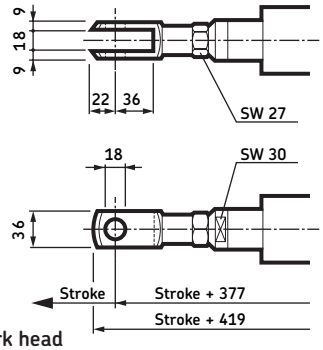

Fork head

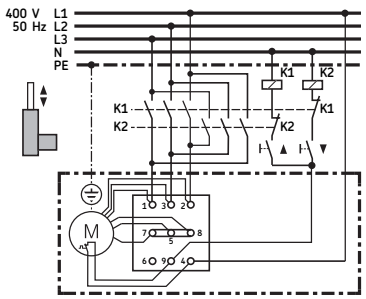

Wiring diagram

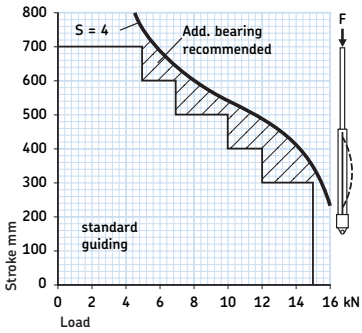

Diagram bending of spindle

S = safety factor Euler 3

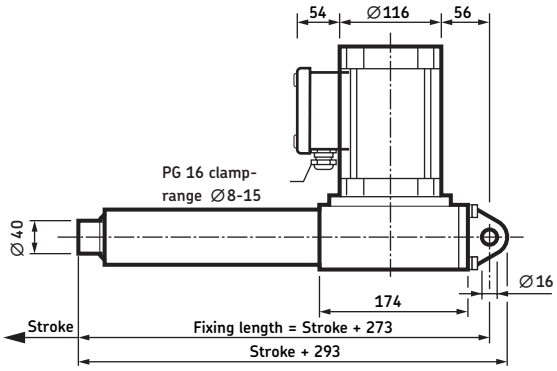

Side view

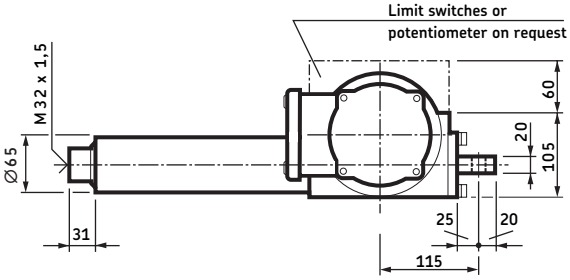

Top view

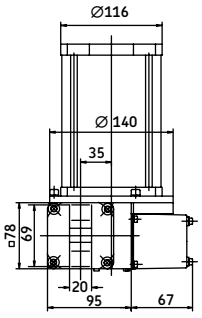

Rear view

Magnetic Elektromotoren AG
CH-4410 Liestal, Switzerland
Tel +41 61 925 4111, Fax +41 61 921 3704
E-mail magnetic.switzerland@skf.com

Publication **L5321,2320EN.0/07.01**

SKF

www.bergab.ru Берг АБ bergab@ya.ru Тел. (495)-228-06-21, факс (495) 223-3071

Linear actuators

MAGFORCE STW

Description
Magforce linear actuators type STW are specially suitable for industrial applications due to their compact and robust design. The stroke is restricted by internal mechanical stops. Magforce actuators have an integrated friction clutch to protect the actuator and the application from overload. The internal mechanical end stops must not be used as stroke limit. If it cannot be avoided that the actuator runs into the end stops, the use of end switches (accessories or external) is imperative. The motor, however, should be prevented from operating for long periods of time against the end stops. The duty cycle stated below relates to an ambient temperature of +40 °C and an interval operating time of 10 minutes. The technical data mentioned refer to operation under nominal load.
A thermal switch incorporated in the motor winding cuts off the power supply at 100 °C thus protecting the motor from overheating and resets itself again after cooling. The standard stroke is 200 mm, but lengths up to 700 mm are available on request, whereby the body length is increased proportionally. With increasing push forces the safety factor decreases. In order to maintain the recommended safety factor of S=4 an additional guide bearing can be fitted, which extends the body length by 50 mm.

Electrical Connection
Electrical connections are extremely simple because there are no built-in limit switch. Reversing of the motor is achieved by changing poles via push button or relay. A direct change of direction should be avoided because of the arising inertia forces. The push button or switch must return automatically to the neutral position when it is released so that the motor does not run against the end stops for longer than necessary. Alternatively external limit switches can be supplied on request which switch off the motor in the end positions. For wiring diagram see inside terminal box. Do not connect motors in parallel. They must be connected according to a special diagram.

Installation
The actuator is attached via the rear and front clevis. An adapter supplied optionally as well as the fork head can be fixed to the push tube. Turning of the push tube is generally possible. When using the limit switch with STW actuators, the push tube must not be turned again after limit switch adjustment. Side loads on the push tube must be avoided. The push tube must not be subjected to bending loads and motor and levers should be aligned. Make sure that the electric cables are not damaged by squeezing, bending or stretching. Customers must ensure that the cable

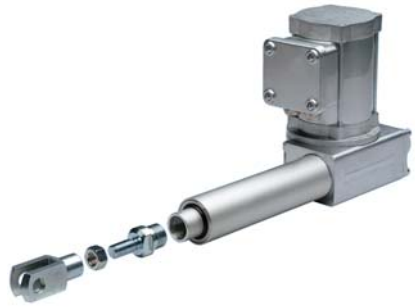

entry point is tight to guarantee protection class IP54.

Maintenance
The linear actuator has sufficient lubricaten reserve and is almost maintance-free. Only the push tube should be cleaned and lightly greased from time to time. The service life depends very much on the corresponding application (for example, temperature, conditions regarding run, force and cycles, as well as environmental influences) and must be found out in case of need. Defective motors may be repaired only in our factory for safety reasons.

Remark
If our actuators are used for applications where persons could be directly or indirectly endangered, we have to be contacted in order to discuss safety precautions.

Technical data:	Unit	STW 5007	STW 7010	STW 10020	STW 15040
Push/pull force	kN	5	7	10	15
Static load	kN	16	16	16	16
Speed	mm/s	12	8	4	2
Stroke length	mm	100 to 700	100 to 700	100 to 700	100 to 700
Voltage	VAC/50 Hz	1x230	1x230	1x230	1x230
Power consumption	W	700	710	710	750
Current consumption	A	3,3	3,5	3,5	3,5
Duty cycle (SD 10 min.)	%	15	10	10	10
Ambient temperature	°C	-10 to +40	-10 to +40	-10 to +40	-10 to +40
Protection/insulation class	-	I/E	I/E	I/E	I/E
Protection class	IP	54	54	54	54
Weight (with 200 mm stroke)	kg	14,6	14,6	14,6	14,6

magnetic

Linear actuators MAGFORCE STW

Accessories

- adapter 1031,0106
- fork head complete 1051,9038
- limit switches complete 0 ... 370 mm stroke lengths 1043,0268
- limit switches complete 100 ... 445 mm stroke lengths 1043,0252
- limit switches complete 200 ... 740 mm stroke lengths 1043,0266
- potentiometer 475 mm stroke lengths 1 kΩ standard 1063,0011
- potentiometer max. 944 mm stroke lengths 1 kΩ standard 1063,0012
- other potentiometer values on request
- extended motor shaft
- magnetic brake
- back-up nut

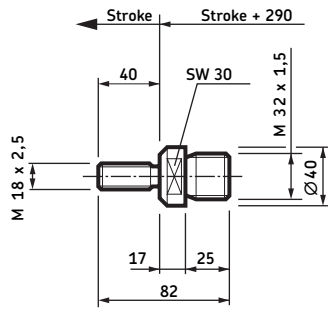

Adapter

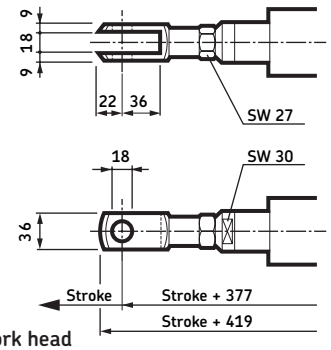

Fork head

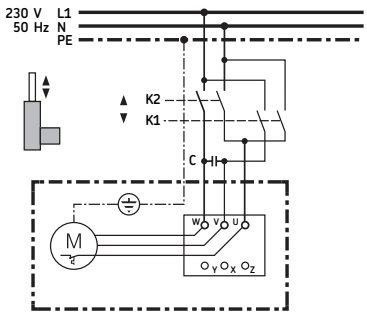

Wiring diagram

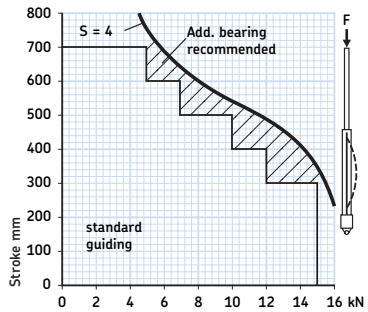

Diagram bending of spindle

S = safety factor Euler 3

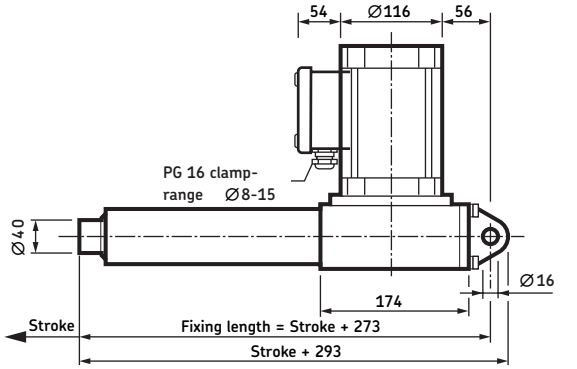

Side view

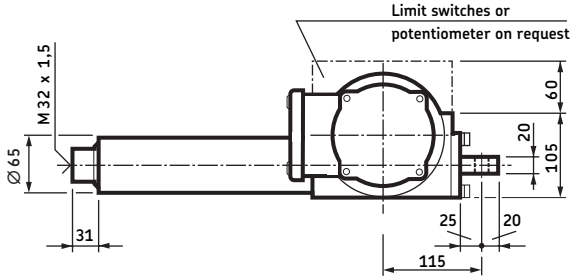

Top view

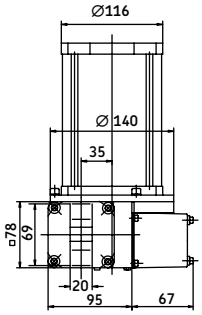

Rear view

Magnetic Elektromotoren AG
CH-4410 Liestal, Switzerland
Tel +41 61 925 4111, Fax +41 61 921 3704
E-mail magnetic.switzerland@skf.com

Publication **L5321,2310EN.0/07.01**

SKF

www.bergab.ru Берг АБ bergab@ya.ru Тел. (495)-228-06-21, факс (495) 223-3071

Linear actuators

MAGFORCE

Accessories for WSP, DSP, ASM

Fixing clamp

The fixing clamp enables the actuator to be mounted without the use of the standard fixing points. The actuator can be pivoted on the clamp with pivot screws supplied by the customer. The fixing clamp can be positioned at any point along the entire length of the protective sleeve of the actuator.

Order number: 1014,5814

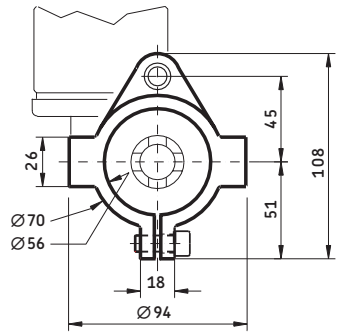

Front view: Fixing clamp

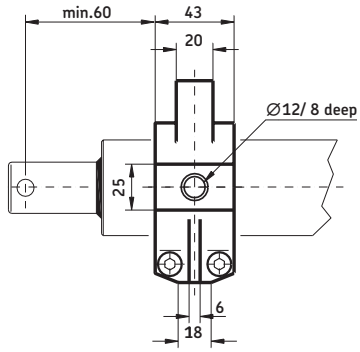

Side view: Fixing clamp

Magnetic Elektromotoren AG
CH-4410 Liestal, Switzerland
Tel +41 61 925 4111, Fax +41 61 921 3704
E-mail magnetic.switzerland@skf.com

Publikation **L5328,2131EN.0/07.01**

www.bergab.ru Берг АБ bergab@ya.ru Тел. (495)-228-06-21, факс (495) 223-3071

magnetic

Linear actuators

MAGFORCE Mechanical limit switches WSP, DSP, ASM

Description

The mechanical limit switches for WSP, DSP, and ASM consist of an attractive die-cast housing with a sealed, protective cover (IP54), an additional guide rod, and two adjustable trip cams. The whole switching unit can be rotated by up to 140° about the protective sleeve to accomodate any space limitations encountered.

Function

The switch housing is fixed to the protective sleeve by means of clamping screws. To set the retracted end position (down), the front trip cam on the guide rod is adjusted, and to set the extended position (up), the rear trip cam is adjusted. The two trip cams strike the ends of the trip rod projecting from the housing and operate the limit switches. The switching capacity of the limit switches is 250 V/3 A, and the operation force required is 35 N.

Electrical connection

Electrical connection is via two cable entry points to the easily accessible terminals in the housing, as shown in the diagram:
wiring diagram WSP
wiring diagram DSP
wiring diagram ASM

Electric wires are to be run and secured so as to prevent damage by pinching, bending or pulling. The cable entry is to be checked for tightness, to ensure that the IP54 requirements are met.

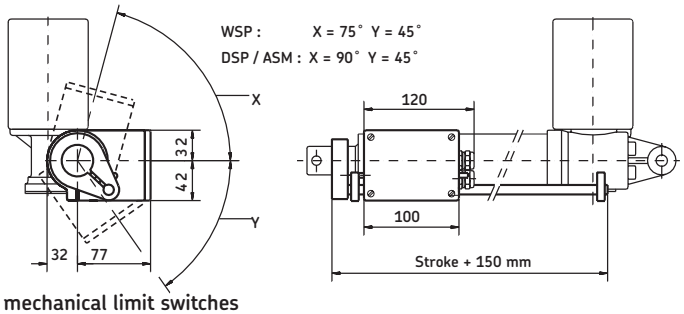

Dimensions mechanical limit switches

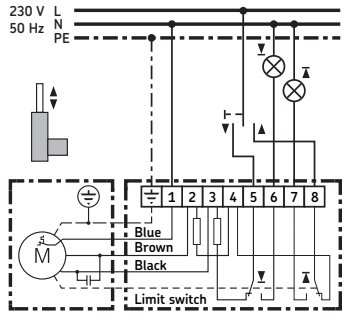

Wiring diagram WSP

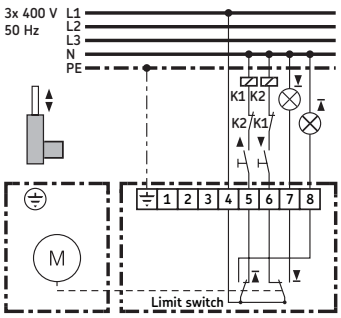

Wiring diagram DSP

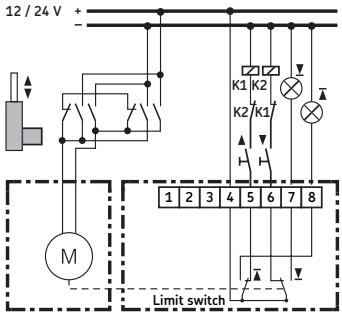

Wiring diagram ASM

Magnetic Elektromotoren AG
CH-4410 Liestal, Switzerland
Tel +41 61 925 4111, Fax +41 61 921 3704
E-mail magnetic.switzerland@skf.com

Publication **L5328,2132EN.0/07.01**

SKF

Linear actuators

MAGFORCE

Limit switch unit Potentiometer unit

STW, STD, STG, STN

Description

The manual operation limit switch of the types STD, STW, STG and STN is shown as an option on the outline drawing on our leaflets L5321,2310/2320/2330/2345.
By means of the manual operation limit switch there is, depending on the application, a possibility to change the course simply and effectively. Independent of each function the requested end position "above or below" can be adjusted to the necessary demands, i.e. extend the max retracted stroke 100 mm of the course. Thereby has to be taken note of the event that in the "up and down" end position the adjustable stroke is shortened by 10 mm. The reason is the construction of the manual operation limit switch (mechanical/ electrical) and the run on the actuator. Under the aluminium cover you will find the mechanic limit switch unit. On a control spindle which is driven on over a toothed belt there are two switch nuts which are hampered in the rotation by a guide-rail and from this reason are moving axial. Because of this axial movement of the control nuts, two limit switches are operated, which define the retracted and extended end position of the linear unit.
CAUTION: On maximum stroke in delivered condition or after the adjustment of the requested special stroke, do not turn the push tube again because the attachment to the limit switch unit is not longer secured!

Electrical Connection

Connection of the limit switch unit and the motor must be in accordance with the adjacent diagrams. Before final commissioning of the motors, it is necessary to check by means of short pulses that the direction of rotation or phase sequence of the motor is correct. Otherwise there is a risk that the limit switches will be overrun and the limit switch unit damaged.

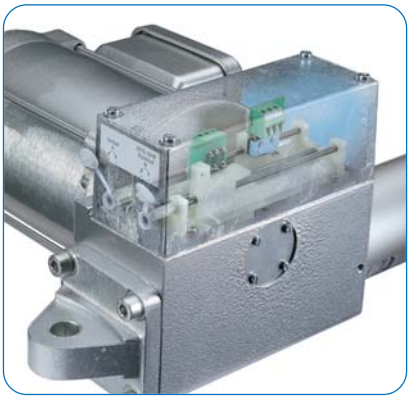

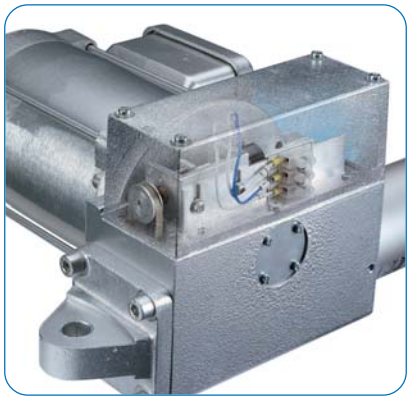

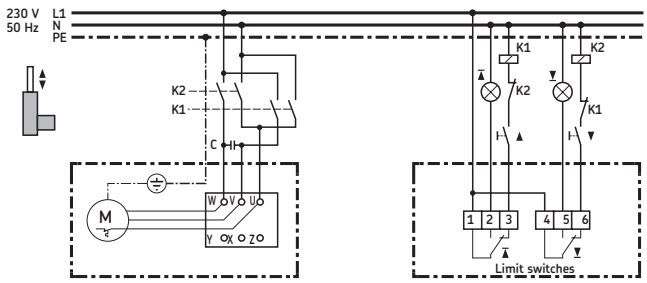

Wiring and control diagram for STW

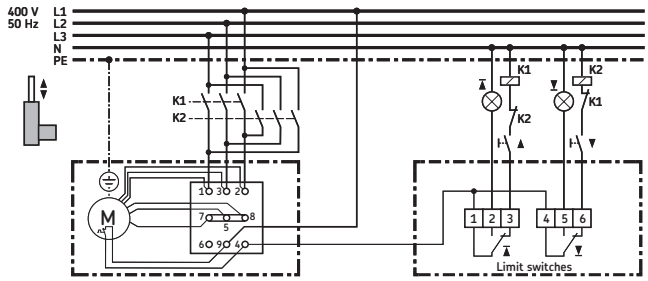

Wiring and control diagram for STD

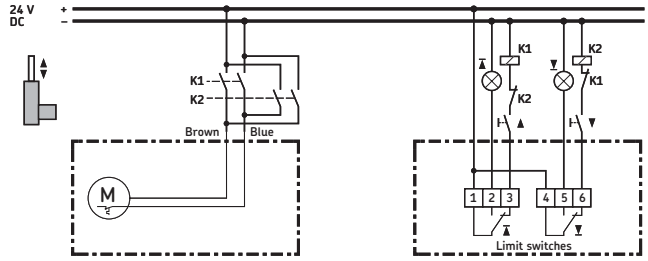

Wiring and control diagram for STG

Adjustment of the manual operation limit switch (option)
The optional limit switch is assembled on the gear box (see illustration 2). In the box there are two openings from which the limit switch will be adjusted with a hexagon socket screw key. After the adjustment, the openings have to be closed again with the lids. The manual operation limit switch will be adjusted by trimming the two limit switches on the respective spindle (see illustration 1).
The push tube is secured with a gummed tape together with the housing tube.
A distortion of the push tube by hand causes that the attachment to the lower end position is not guaranteed any longer.
The limited switches are adjusted by the company to the maximum stroke (= 1...2 mm before the limit stop).

Adjustment of the potentiometer (option)
The optional potentiometer is assembled on the gear case (see illustration 2).
The electrical connection will be installed in accordance with the diagrams.
The potentiometer contains facts as follows:

Resistor value:	max 1 kΩ ± 5%, characteristic curve
Nominal capacity:	3 W on 40 °C, 2 W on 70 °C.

Proceedings:
- Please assemble the cover after the electrical installation.
- Alteration of the resistor value can be defined by driving of various stroke length. If during the assembly of the actuator the push tube has been turned out by hand, there is no more guarantee that the potentiometer will remain attached any longer (actuator lower end position = 0 Ω).

Drive the actuator in the lower end position and the base adjustment will be restored. Otherwise there will be wrong resistor values. The potentiometer is equipped with a friction clutch.

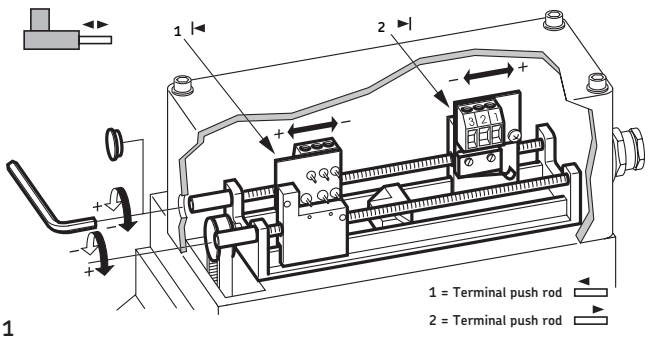

Illustration 1

Proceedings:
- After the installation of the electricity (see chapter "electric/supply") and after studying the mechanic function of the manual operation limit switch, the cover can be assembled.
  The connecting terminals are under voltage!
- Please control whether the direction of the motors motion is correct.
  If necessary alter the phase sequence/ polarity.
- Drive the actuator to the required lower end position.
- Now turn the limit switch to the lower end position as far against the trip cam until it is switching.
- Please do the same for the upper end position.
- Drive the linear actuator repeatedly up and down and if need be work out the necessary fine corrections.

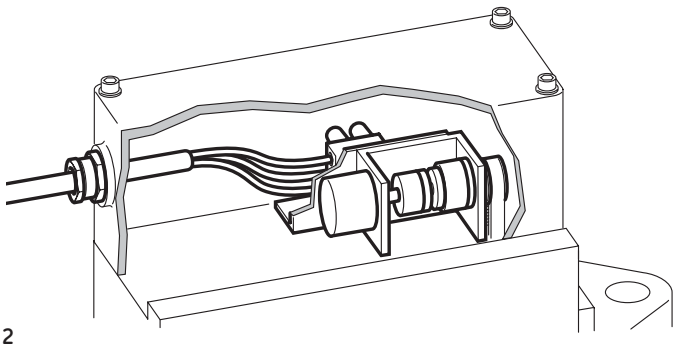
Illustration 2

Electrical connection of the potentiometer
If the linear actuator is equipped with a potentiometer, the connection of it has to be done in accordance with the connection potentiometer drawing. The actuator will be connected according to the variation of voltage as described in page 1.

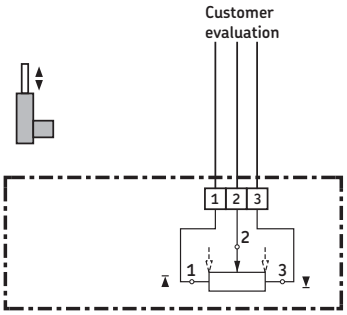

Connection potentiometer

Magnetic Elektromotoren AG
CH-4410 Liestal, Switzerland
Tel +41 61 925 4111, Fax +41 61 921 3704
E-mail magnetic.switzerland@skf.com

Publication **L5328,2340EN.0/07.01**