WIPPERMANN

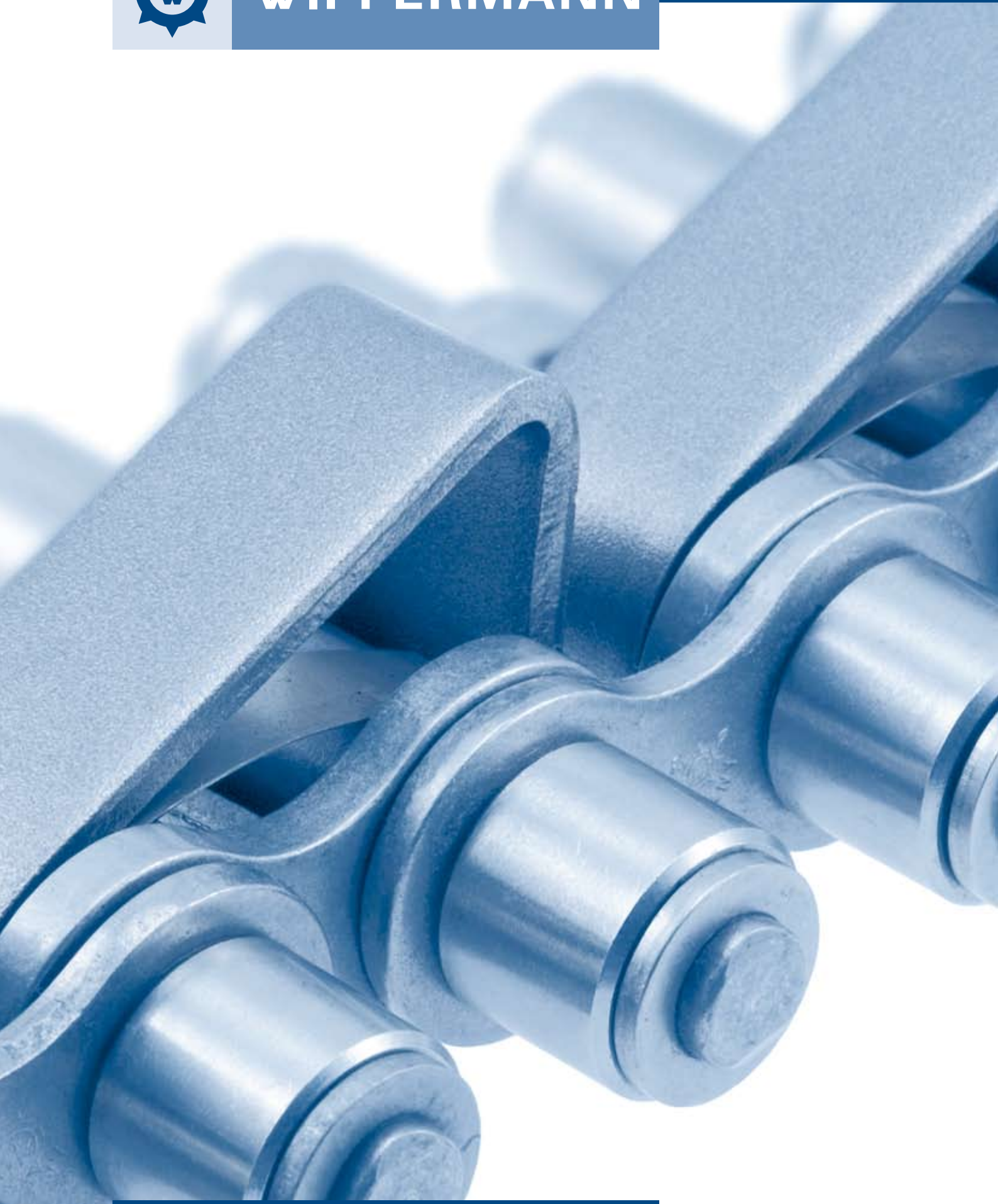

MAIN CATALOGUE 2007

www.bergab.ru Берг АБ bergab@ya.ru Тел. (495)-228-06-21, факс (495) 223-3071

Product information

www.bergab.ru Берг АБ bergab@ya.ru Тел. (495)-228-06-21, факс (495) 223-3071

Technical information

This catalogue K 2007 replaces all previous editions.

Chain types, which are no longer manufactured due to rationalisation, may still be available or may be manufactured again, if a sufficient quantity is ordered. We reserve the right to alter non-standard chains or cease their production without prior notice.

Illustrations merely serve for exemplification and are by no means binding for the final design.

Permissible length deviations according to DIN. For dimensions without stated tolerances DIN ISO 2768 c applies.

All information subject to errors and alterations. Any liability for misprints excluded.

View of Wippermann plant

Precision products for worldwide markets

Wippermann is a leading manufacturer of industrial chains and sprockets. We have a renowned customer base, particularly in engine, machine and plant construction.

As a medium-sized family-run business with 300 employees, we manufacture a comprehensive range of products in Germany. We specialise in steel link chains with pitches of between 5 mm and 100 mm. One of our main focuses is the production of maintenance-free and stainless steel chains.

Examples of highest quality:
MARATHON chain and duplex sprocket made of stainless steel

Furthermore, our product range comprises leaf chains, bush chains and inverted tooth chains as well as chains made to specifications. Additionally, we can supply matching standard sprockets or sprockets made according to drawings.

We have been certified according to DIN EN ISO 9001 for 15 years. One of our core competencies is professional consulting as to drive and conveyor technology. Together with our customers we develop and plan individual, demand-oriented solutions and realise them fast and precisely.

Owing to continuous investments in state-of-the-art technologies we are able to guarantee production processes on the highest possible level. The famous Wippermann quality is ensured by the use of selected raw materials, by our high competence in processing semi-finished goods as wells as by the application of sophisticated heat treatment and coating procedures. Our comprehensive distribution network with subsidiaries, agents and dealers guarantees the availability of our products everywhere in the world - fast and reliably.

www.bergab.ru Берг АБ bergab@ya.ru Тел. (495)-228-06-21, факс (495) 223-3071

Wippermann administration building

A company with tradition and vision

The company Wippermann was founded in 1893 by Wilhelm Wippermann and initially produced bicycle and motorbike components. Before the First World War, the company expanded rapidly and had several production plants in Germany and abroad as well as an international distribution system. However, the company soon had to face setbacks: due to the Second World War almost all plants were destroyed and all production plants abroad were lost.

As early as in 1929 Wilhelm Wippermann jr. had taken over the management of the company after his father's death. After the war, he managed to consolidate the company and create a new and solid foundation. The manufacturing of precision steel link chains was getting more and more important, and they are now the key product within the Wippermann range.

In the nineties the company changed from merely being a manufacturer of standard chains to a supplier of high technology products.

Today Wippermann is a successful family enterprise in its fifth generation.

The founder of the company Wilhelm Wippermann sen.
*1858 †1929

Shape measurement of chain components

Quality is our philosophy

The name Wippermann has meant highest product quality for more than one hundred years.

We have always managed to guarantee high standards by exclusively using West European raw materials and applying state-of-the-art manufacturing technologies in combination with our specialised know-how.

Our company has been certified according to DIN 9001 for more than 15 years. It is managed on a process-oriented basis and the quality assurance system comprises all areas including design, production as well as after sales service.

Our employees are the most important factor within our company philosophy. They realise our company guidelines and thus ensure Wippermann quality by means of a number of control procedures - for each product and for the entire production process. This guarantees and verifies the continuous improvement of usage properties such as wear, fatigue and corrosion resistance.

Our products set benchmarks, and the increasing requirements of the market are our challenge.

Quality checks with state-of-the-art test stands:
fatigue resistance test

www.bergab.ru Берг АБ bergab@ya.ru Тел. (495)-228-06-21, факс (495) 223-3071

Machining centre

State-of-the-art technology for research, development and production

Continuous research and development processes are an essential part of our company philosophy and also a central element for securing the future.

By means of a network of different development partners, institutions and universities we can ensure the up-to-dateness of our procedures and processes.

Furthermore, our know-how on materials, lubricants and functional layers enables us to supply tailor-made solutions to all our customers.

Here is an overview of our competencies in development processes:

- Finite elements method
- Chain calculation programme
- University research
- Co-operation partners
- Test stands
- 3D CAD system

FE analysis of chain components

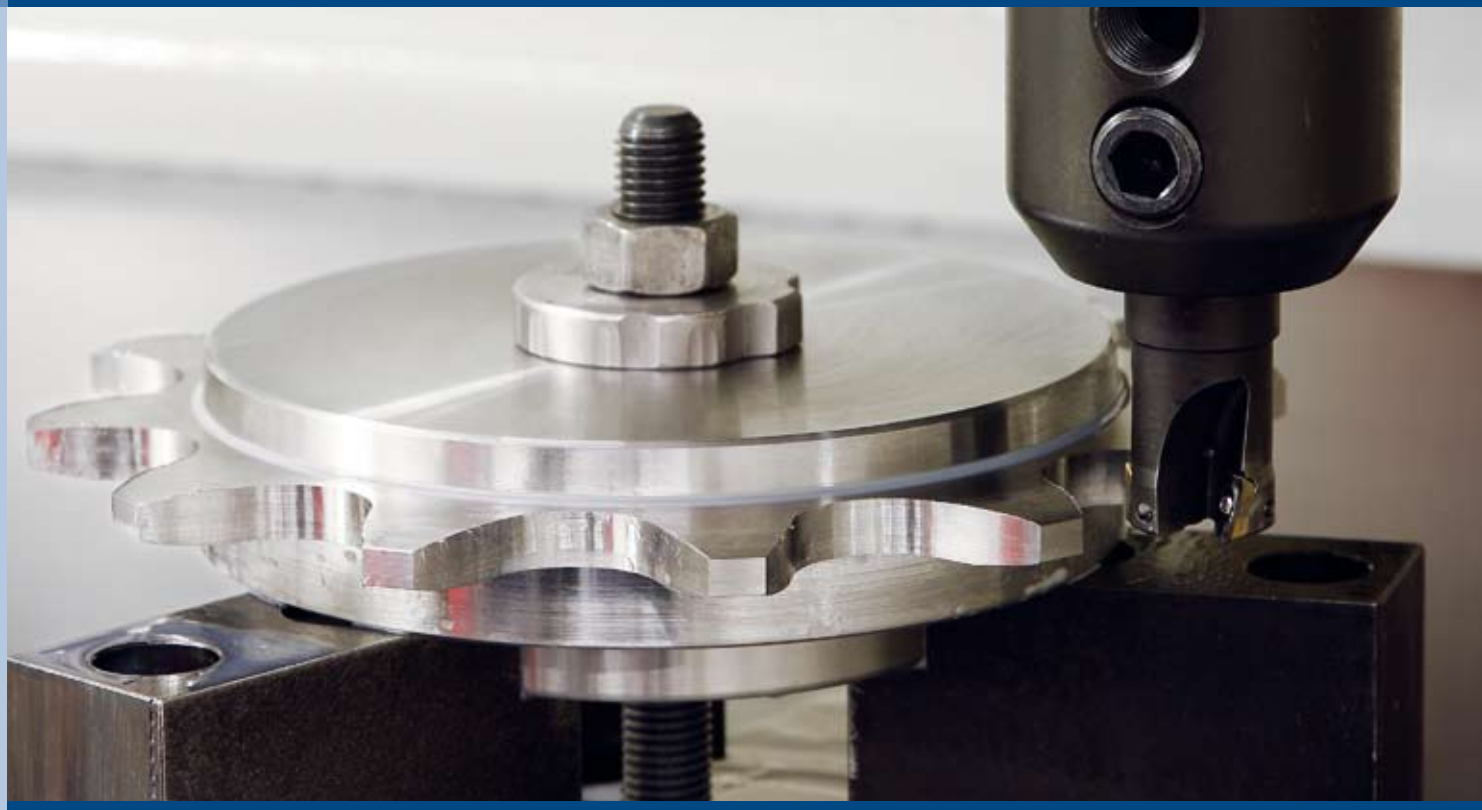

CNC treatment of sprockets

Chains and sprockets according to customers' specifications

We offer our customers competent consulting for all drive technology requirements.

Within the framework of an overall concept, Wippermann is able to develop tailor-made engineering solutions resulting in complete chain-sprocket systems with perfectly-matched components for optimal functionality.

Our sprocket manufacturing equipment comprises state-of-the-art CNC automatic lathes and mill centres. Therefore we are able to manufacture all requested tooth shapes according to standard and/or customers' specifications. The use of innovative technologies and multi-shift operation ensure perfect results and short delivery periods.

As far as special chains are concerned, we can offer numerous functionalities by means of various attachments and mounted parts.

- Special chains
- Chains made to specification
- Maintenance-free chains
- Wear-resistant chains
- Highly fatigue endurable chains
- Corrosion-resistant chains

Special chain

www.bergab.ru Берг АБ bergab@ya.ru Тел. (495)-228-06-21, факс (495) 223-3071

Chain plates in the continuous annealing furnace

Heat treatment

Heat treatment is one of the most important process steps in chain production. We have the most sophisticated equipment as well as specially developed technologies. Furthermore, we support all steel hardening processes by means of a central computer system.

This system checks all heat treatment parameters during the entire procedure and is thus able to guarantee continuously high product quality.

Sophisticated equipment for heat treatment: chamber kiln

Contract heat treatment

For heat treatment in throughput and charge operation we use conveyor furnace equipment for treatment under inert protective gas. Furthermore, we have multi-purpose chamber kilns, pusher type furnaces and swing retorts.

We will treat bulk goods up to a partial weight of 1.5 kg as well as products with a length of up to 1,000 mm and weights up to 400 kg; this step is then followed by degreasing or vibratory finishing processes.

Subsequently, further finishing by means of shot peening procedure is possible.

Our range of services includes:

- Hardening and tempering
- Case hardening and annealing
- Carbonitriding
- Spheroidise annealing
- Carburisation
- Nigrification

Testing facilities:

- Hardness test according to Brinell, Vickers and Rockwell
- Micro hardness test
- Metallography

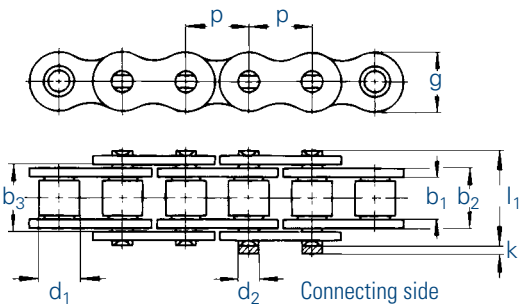

Chain		DIN	Pitch		Inner width	Inner link width	Outer plate width	Roller Ø	Pin Ø	Plate height	Projection over connecting link	Width over pin	Bearing area	Minimum tensile strength DIN	Minimum tensile strength	Weight	Connecting links
			p		b_1 min.	b_2 max.	b_3 min.	d_1 max.	d_2 max.	g max.	k max.	l_1 max.	f	F_B min.	F_B min.	q ≈	
No.	Ind.	No.	mm	inch	mm	mm	mm	mm	mm	mm	mm	mm	cm²	kN	kN	kg/m	No.
440		03	5,0	-	2,50	4,15	4,25	3,20	1,49	4,1	2,5	7,4	0,06	2,2	2,2	0,08	11,15
445		04	6,0	-	2,80	4,10	4,20	4,00	1,85	5,0	2,9	7,4	0,08	3,0	3,0	0,15	11,15
450		05 B-1	8,0	-	3,00	4,77	4,90	5,00	2,31	7,1	3,1	8,6	0,11	5,0	5,5	0,18	11,15
453		-	9,525	⅜	3,30	5,45	5,58	6,00	2,78	9,0	3,1	9,6	0,15	8,0	8,2	0,26	11,15,111
454		-	9,525	⅜	3,94	6,70	6,83	6,35	3,28	9,0	3,3	11,6	0,22	9,0	9,4	0,36	11,12,15
455	[1]	06 B-1	9,525	⅜	5,72	8,53	8,66	6,35	3,28	8,2	3,3	13,5	0,28	9,0	9,6	0,41	11,12,15
331		081	12,7	½	3,30	5,80	5,93	7,75	3,66	9,9	1,5	10,2	0,21	8,2	9,1	0,28	11,12,15
332		-	12,7	½	4,88	7,20	7,33	7,75	3,66	9,9	1,5	11,2	0,26	8,2	9,1	0,33	11,12,15
110		082	12,7	½	2,38	4,60	4,73	7,75	3,66	9,9	-	8,2	0,17	10,0	10,0	0,26	15,111
17		083	12,7	½	4,88	7,90	8,03	7,75	4,09	10,3	1,5	12,9	0,32	12,0	13,2	0,42	11,12,15
385		-	12,7	½	6,40	9,78	9,91	7,75	3,97	11,5	3,9	15,4	0,38	16,0	17,1	0,50	11,12,15
461		-	12,7	½	6,40	9,93	10,06	8,51	4,45	11,8	3,9	15,8	0,44	18,0	18,6	0,66	11,12,15
462		08 B-1	12,7	½	7,75	11,30	11,43	8,51	4,45	11,8	3,9	17,0	0,50	18,0	18,6	0,70	11,12,15
500		-	15,875	⅝	6,48	10,08	10,21	10,16	5,08	14,7	4,1	16,4	0,51	22,4	27,5	0,78	11,12,15
501		10 B-1	15,875	⅝	9,65	13,28	13,41	10,16	5,08	14,7	4,1	19,6	0,67	22,4	27,0	0,91	11,12,15
513		12 B-1	19,05	¾	11,68	15,62	15,75	12,07	5,72	16,1	4,6	22,7	0,89	29,0	31,0	1,18	11,12,15
548		16 B-1	25,4	1	17,02	25,40	25,60	15,88	8,28	21,0	5,4	36,1	2,10	60,0	72,0	2,68	11,111,12
552		-	30,0	-	17,02	25,40	25,60	15,88	8,28	21,0	5,4	36,1	2,10	60,0	72,0	2,50	11,111,12
563		20 B-1	31,75	1 ¼	19,56	29,00	29,20	19,05	10,19	26,4	6,1	43,2	2,96	95,0	105,0	3,50	11,111,12
596		24 B-1	38,1	1 ½	25,40	37,90	38,20	25,40	14,63	33,4	6,6	53,4	5,54	160,0	180,0	6,80	111,12
613		28 B-1	44,45	1 ¾	30,99	46,50	46,80	27,94	15,90	37,0	7,4	65,1	7,39	200,0	230,0	8,50	111,12
652		32 B-1	50,8	2	30,99	45,50	45,80	29,21	17,81	42,2	7,9	67,4	8,10	250,0	276,0	10,50	111,12
671		40 B-1	63,5	2 ½	38,10	55,70	56,00	39,37	22,89	52,9	10,0	82,6	12,75	355,0	405,0	16,40	111,12
679		48 B-1	76,2	3	45,72	70,50	71,00	48,26	29,24	63,8	10,0	99,1	20,61	560,0	630,0	25,00	111,12

Electrogalvanised or nickel-plated chains on request. In this case chains may only have 80 % of the tensile strength.

[1] with straight side plates

For details on orders and enquiries see page 114. Standard sprockets as of page 61.
Information on the selection of chain sizes and drives as of page 101.

Connecting links: According to DIN (...)

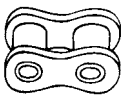

No. 4 (B)

Inner link

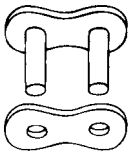

No. 7 (A)

Outer link
(to be riveted)

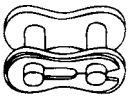

No. 11 (E)

Spring clip
connecting link

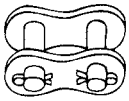

No. 111 (S)

Connecting link with
cottered pin

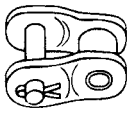

No. 12 (L)

Single
cranked link

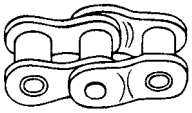

No. 15 (C)

Double
cranked link

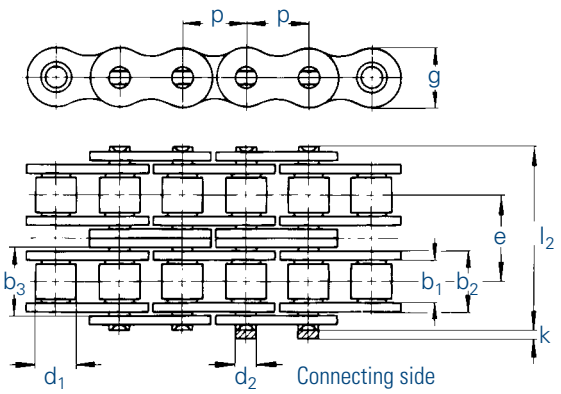

Chain		DIN	Pitch		Inner width	Inner link width	Outer plate width	Roller Ø	Pin Ø	Trans-verse pitch	Plate height	Projec-tion over connec-ting link	Width over pin	Bearing area	Minimum tensile strength DIN	Minimum tensile strength	Weight	Connecting links
			p		b_1 min.	b_2 max.	b_3 min.	d_1 max.	d_2 max.	e	g max.	k max.	l_2 max.	f	F_B min.	F_B min.	q ≈	
No.	Ind.	No.	mm	inch	mm	mm	mm	mm	mm	mm	mm	mm	mm	cm^2	kN	kN	kg/m	No.
D 445		-	6,0	-	2,80	4,10	4,25	4,00	1,85	5,50	5,0	2,9	13,3	0,14	5,0	5,0	0,23	11,15
D 450		05 B-2	8,0	-	3,00	4,77	4,90	5,00	2,31	5,64	7,1	3,1	14,3	0,22	7,8	8,2	0,36	11,15
D 455	1	06 B-2	9,525	⅜	5,72	8,53	8,66	6,35	3,28	10,24	8,2	3,3	23,8	0,56	16,9	17,4	0,78	11,12,15
D 462		08 B-2	12,7	½	7,75	11,30	11,43	8,51	4,45	13,92	11,8	3,9	31,0	1,01	32,0	37,0	1,36	11,12,15
D 501		10 B-2	15,875	⅝	9,65	13,28	13,41	10,16	5,08	16,59	14,7	4,1	36,2	1,34	44,5	54,0	1,82	11,12,15
D 513		12 B-2	19,05	¾	11,68	15,62	15,75	12,07	5,72	19,46	16,1	4,6	42,2	1,79	57,8	63,0	2,38	11,12,15
D 548		16 B-2	25,4	1	17,02	25,40	25,60	15,88	8,28	31,88	21,0	5,4	68,0	4,21	106,0	140,0	5,30	11,111,12
D 563		20 B-2	31,75	1 ¼	19,56	29,00	29,20	19,05	10,19	36,45	26,4	6,1	79,0	5,91	170,0	210,0	7,30	11,111,12
D 596		24 B-2	38,1	1 ½	25,40	37,90	38,20	25,40	14,63	48,36	33,4	6,6	101,0	11,09	280,0	360,0	13,40	111,12
D 613		28 B-2	44,45	1 ¾	30,99	46,50	46,80	27,94	15,90	59,56	37,0	7,4	124,0	14,79	360,0	443,0	16,60	111,12
D 652		32 B-2	50,8	2	30,99	45,50	45,80	29,21	17,81	58,55	42,2	7,9	126,0	16,21	450,0	530,0	21,00	111,12
D 671		40 B-2	63,5	2 ½	38,10	55,70	56,00	39,37	22,89	72,29	52,9	10,0	154,0	25,50	630,0	806,0	32,60	111,12
D 679		48 B-2	76,2	3	45,72	70,50	71,00	48,26	29,24	91,21	63,8	10,0	190,0	41,23	1000,0	1100,0	50,00	111,12

Electrogalvanised or nickel-plated chains on request. In this case chains may only have 80 % of the tensile strength.

[1] with straight side plates

For details on orders and enquiries see page 114. Standard sprockets as of page 61.
Information on the selection of chain sizes and drives as of page 101.

Connecting links: According to DIN (...)

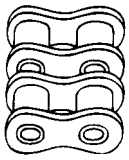

No. 4 (B)

Inner link

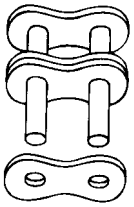

No. 7 (A)

Outer link
(to be riveted)

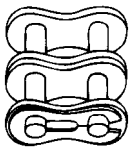

No. 11 (E)

Spring clip
connecting link

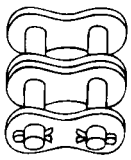

No. 111 (S)

Connecting link with
cottered pin

No. 12 (L)

Single
cranked link

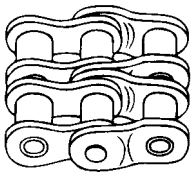

No. 15 (C)

Double
cranked link

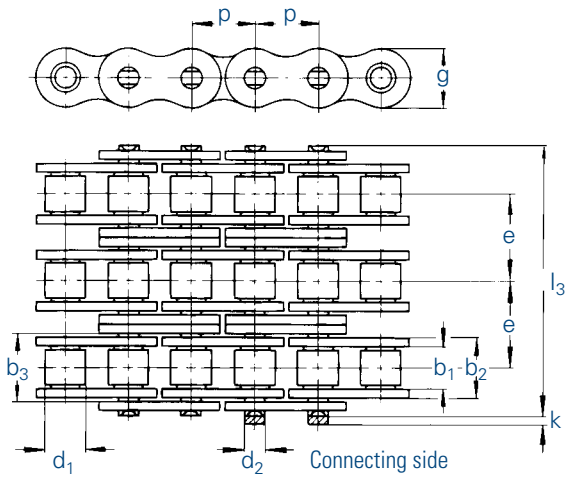

Chain		DIN	Pitch		Inner width	Inner link width	Outer plate width	Roller Ø	Pin Ø	Trans-verse pitch	Plate height	Projec-tion over connec-ting link	Width over pin	Bearing area	Minimum tensile strength DIN	Minimum tensile strength	Weight	Connecting links
			p		b_1 min.	b_2 max.	b_3 min.	d_1 max.	d_2 max.	e	g max.	k max.	l_3 max.	f	F_B min.	F_B min.	q ≈	
No.	Ind.	No.	mm	inch	mm	mm	mm	mm	mm	mm	mm	mm	mm	cm^2	kN	kN	kg/m	No.
T 450		05 B-3	8,0	-	3,00	4,77	4,90	5,00	2,31	5,64	7,1	3,1	19,9	0,33	11,1	11,1	0,54	11,15
T 455	1	06 B-3	9,525	⅜	5,72	8,53	8,66	6,35	3,28	10,24	8,2	3,3	34,0	0,81	24,9	24,9	1,18	11,12,15
T 462		08 B-3	12,7	½	7,75	11,30	11,43	8,51	4,45	13,92	11,8	3,9	44,9	1,51	47,5	56,0	2,01	11,12,15
T 501		10 B-3	15,875	⅝	9,65	13,28	13,41	10,16	5,08	16,59	14,7	4,1	52,8	2,02	66,7	80,0	2,70	11,12,15
T 513		12 B-3	19,05	¾	11,68	15,62	15,75	12,07	5,72	19,46	16,1	4,6	61,7	2,68	86,7	94,0	3,12	11,12,15
T 548		16 B-3	25,4	1	17,02	25,40	25,60	15,88	8,28	31,88	21,0	5,4	99,9	6,31	160,0	211,0	7,50	11,111,12
T 563		20 B-3	31,75	1 ¼	19,56	29,00	29,20	19,05	10,19	36,45	26,4	6,1	116,0	8,87	250,0	300,0	10,60	11,111,12
T 596		24 B-3	38,1	1 ½	25,40	37,90	38,20	25,40	14,63	48,36	33,4	6,6	150,0	16,63	425,0	523,0	20,00	111,12
T 613		28 B-3	44,45	1 ¾	30,99	46,50	46,80	27,94	15,90	59,56	37,0	7,4	184,0	22,18	530,0	660,0	25,00	111,12
T 652		32 B-3	50,8	2	30,99	45,50	45,80	29,21	17,81	58,55	42,2	7,9	184,0	24,31	670,0	800,0	32,00	111,12
T 671		40 B-3	63,5	2 ½	38,10	55,70	56,00	39,37	22,89	72,29	52,9	10,0	227,0	38,25	950,0	1140,0	48,70	111,12
T 679		48 B-3	76,2	3	45,72	70,50	71,00	48,26	29,24	91,21	63,8	10,0	281,0	61,84	1500,0	1720,0	75,00	111,12

Electrogalvanised or nickel-plated chains on request. In this case chains may only have 80 % of the tensile strength.

[1] with straight side plates

For details on orders and enquiries see page 114. Standard sprockets as of page 61.
Information on the selection of chain sizes and drives as of page 101.

Connecting links: According to DIN (...)

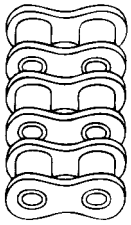

No. 4 (B)

Inner link

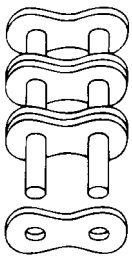

No. 7 (A)

Outer link
(to be riveted)

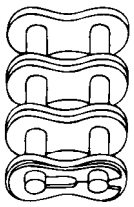

No. 11 (E)

Spring clip
connecting link

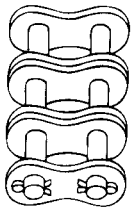

No 111 (S)

Connecting link with
cottered pin

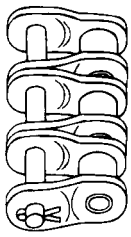

No. 12 (L)

Single
cranked link

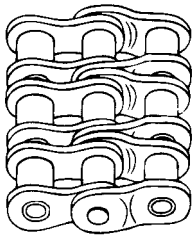

No. 15 (C)

Double
cranked link

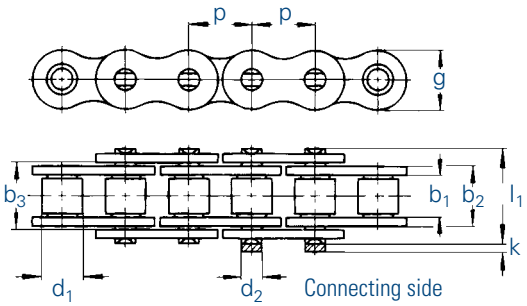

Chain		DIN	Pitch		Inner width	Inner link width	Outer plate width	Roller Ø	Pin Ø	Plate height	Projection over connecting link	Width over pin	Bearing area	Minimum tensile strength DIN	Minimum tensile strength	Weight	Connecting links
			p		b_1 min.	b_2 max.	b_3 min.	d_1 max.	d_2 max.	g max.	k max.	l_1 max.	f	F_B min.	F_B min.	q ≈	
No.	Ind.	No.	mm	inch	mm	mm	mm	mm	mm	mm	mm	mm	cm^2	kN	kN	kg/m	No.
25	2	04 C-1	6,35	¼	3,18	4,80	4,85	3,30	2,31	6,0	2,5	9,0	0,11	3,5	3,5	0,13	11,15
35	2	06 C-1	9,525	⅜	4,68	7,47	7,52	5,08	3,58	9,1	3,3	13,2	0,27	7,9	10,2	0,35	11,12,15
40		08 A-1	12,7	½	7,85	11,15	11,28	7,95	3,96	12,0	3,9	17,8	0,44	14,1	16,5	0,60	11,12,15
50		10 A-1	15,875	⅝	9,40	13,80	13,93	10,16	5,08	15,0	4,1	21,8	0,70	22,2	30,0	1,01	11,12,15
60	9	12 A-1	19,05	¾	12,57	17,70	17,85	11,91	5,94	18,0	4,6	26,9	1,05	31,8	40,0	1,58	11,111,12,15
80	9	16 A-1	25,4	1	15,75	22,50	22,70	15,88	7,92	24,1	5,4	33,5	1,78	56,7	69,0	2,36	11,111,12
100	9	20 A-1	31,75	1 ¼	18,90	27,40	27,60	19,05	9,53	30,1	6,1	41,1	2,61	88,5	92,5	3,80	111,12
120	9	24 A-1	38,1	1 ½	25,22	35,30	35,60	22,23	11,10	36,2	6,6	50,8	3,92	127,0	139,0	5,40	111,12
140	9	28 A-1	44,45	1 ¾	25,22	37,00	37,30	25,40	12,70	42,2	7,4	54,9	4,70	172,4	178,5	7,30	111,12
160	9	32 A-1	50,8	2	31,55	45,00	45,30	28,58	14,27	48,2	7,9	65,5	6,42	226,8	231,0	9,90	111,12
200	9	40 A-1	63,5	2 ½	37,85	54,70	55,00	39,68	19,84	60,3	10,0	80,3	10,85	353,8	387,0	16,50	111,12

Heavy duty design with reinforced side plates and enlarged bearing areas

50 H		-	15,875	⅝	9,40	14,60	14,73	10,16	5,08	15,0	4,1	23,4	0,75	22,2	32,0	1,18	11
60 H	9	-	19,05	¾	12,57	19,45	19,60	11,91	5,94	18,0	4,6	28,9	1,16	31,8	42,0	1,94	11
80 H	9	-	25,4	1	15,75	24,28	24,48	15,88	7,92	24,1	5,4	37,0	1,92	56,7	72,0	3,04	111
100 H	9	-	31,75	1 ¼	18,90	29,10	29,30	19,05	9,53	30,1	6,1	44,0	2,77	88,5	96,0	4,25	111
120 H	9	-	38,1	1 ½	25,22	37,00	37,30	22,23	11,10	36,2	6,6	54,0	4,13	127,0	141,0	6,40	111
140 H	9	-	44,45	1 ¾	25,22	38,70	39,00	25,40	12,70	42,2	7,4	58,0	4,94	172,4	180,0	8,30	111
160 H	9	-	50,8	2	31,55	46,90	47,20	28,58	14,27	48,2	7,9	68,0	6,70	226,8	233,0	11,50	111
200 H	9	-	63,5	2 ½	37,85	57,60	57,90	39,68	19,84	60,3	10,0	84,0	11,60	353,8	400,0	20,00	111

Electrogalvanised or nickel-plated chains on request. In this case chains may only have 80 % of the tensile strength.

[2] without rollers (DIN 8154) [9] dismountable designs (with cottered/split pins) on request

For details on orders and enquiries see page 114. Sprockets on request.
Details on the selection of chain sizes and drives as of page 101.

Connecting links: According to DIN (...)

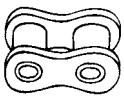

No. 4 (B)

Inner link

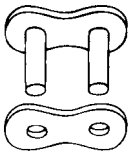

No. 7 (A)

Outer link
(to be riveted)

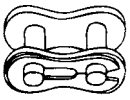

No. 11 (E)

Spring clip
connecting link

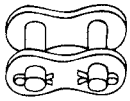

No. 111 (S)

Connecting link
with cottered pin

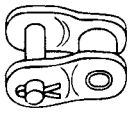

No. 12 (L)

Single
cranked link

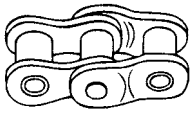

No. 15 (C)

Double
cranked link

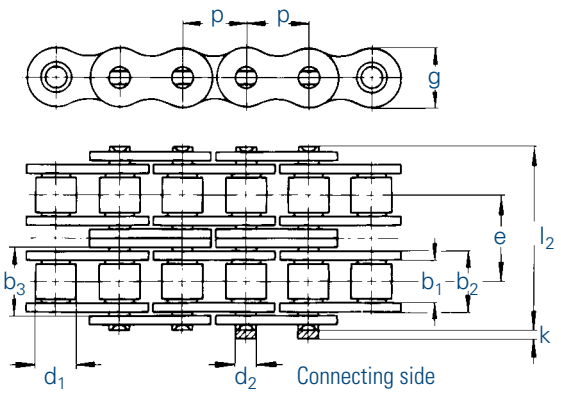

Chain		DIN	Pitch		Inner width	Inner link width	Outer plate width	Roller Ø	Pin Ø	Trans-verse pitch	Plate height	Projec-tion over connec-ting link	Width over pin	Bearing area	Minimum tensile strength DIN	Minimum tensile strength	Weight	Connecting links
			p		b_1 min.	b_2 max.	b_3 min.	d_1 max.	d_2 max.	e	g max.	k max.	l_2 max.	f	F_B min.	F_B min.	q ≈	
No.	Ind.	No.	mm	inch	mm	mm	mm	mm	mm	mm	mm	mm	mm	cm^2	kN	kN	kg/m	No.
35-2	2	06 C-2	9,525	⅜	4,68	7,47	7,52	5,08	3,58	10,13	9,0	3,3	23,4	0,53	15,8	17,0	0,70	11,12,15
40-2		08 A-2	12,7	½	7,85	11,15	11,28	7,95	3,96	14,38	12,0	3,9	32,3	0,88	28,2	29,7	1,20	11,12,15
50-2		10 A-2	15,875	⅝	9,40	13,80	13,93	10,16	5,08	18,11	15,0	4,1	39,9	1,40	44,4	62,0	1,78	11,12,15
60-2	9	12 A-2	19,05	¾	12,57	17,70	17,85	11,91	5,94	22,78	18,0	4,6	49,8	2,10	63,6	76,0	3,15	11,111,12,15
80-2	9	16 A-2	25,4	1	15,75	22,50	22,70	15,88	7,92	29,29	24,1	5,4	62,7	3,56	113,4	135,0	4,90	11,111,12,15
100-2	9	20 A-2	31,75	1 ¼	18,90	27,40	27,60	19,05	9,53	35,76	30,1	6,1	77,0	5,22	177,0	205,0	7,60	111,12
120-2	9	24 A-2	38,1	1 ½	25,22	35,30	35,60	22,23	11,10	45,44	36,2	6,6	96,3	7,84	254,0	290,0	10,80	111,12
140-2	9	28 A-2	44,45	1 ¾	25,22	37,00	37,30	25,40	12,70	48,87	42,2	7,4	103,0	9,40	344,8	357,0	14,30	111,12
160-2	9	32 A-2	50,8	2	31,55	45,00	45,30	28,58	14,27	58,55	48,2	7,9	124,0	12,84	453,6	455,0	19,40	111,12
200-2	9	40 A-2	63,5	2 ½	37,85	54,70	55,00	39,68	19,84	71,55	60,3	10,0	151,0	21,70	707,6	730,0	33,00	111,12

Electrogalvanised or nickel-plated chains on request. In this case chains may only have 80 % of the tensile strength.

[2] without rollers (DIN 8154) [9] dismountable designs (with cottered/split pins) on request

For details on orders and enquiries see page 114. Sprockets on request.
Information on the selection of chain sizes and drives as of page 101.

Connecting links: According to DIN (...)

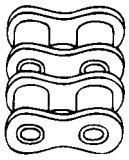

No. 4 (B)

Inner link

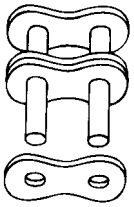

No. 7 (A)

Outer link
(to be riveted)

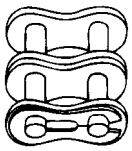

No. 11 (E)

Spring clip
connecting link

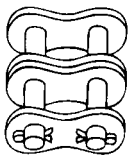

No. 111 (S)

Connecting link
with cottered pin

No. 12 (L)

Single
cranked link

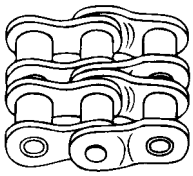

No. 15 (C)

Double
cranked link

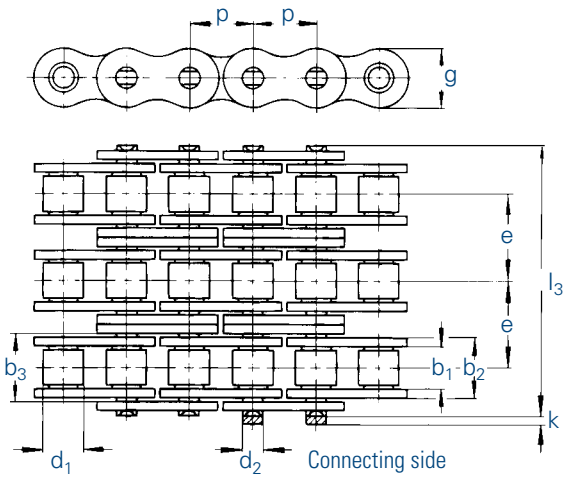

Chain		DIN	Pitch		Inner width	Inner link width	Outer plate width	Roller Ø	Pin Ø	Trans-verse pitch	Plate height	Projec-tion over connec-ting link	Width over pin	Bearing area	Minimum tensile strength DIN	Minimum tensile strength	Weight	Connecting links
			p		b_1 min.	b_2 max.	b_3 min.	d_1 max.	d_2 max.	e	g max.	k max.	l_2 max.	f	F_B min.	F_B min.	q ≈	
No.	Ind.	No.	mm	inch	mm	mm	mm	mm	mm	mm	mm	mm	mm	cm^2	kN	kN	kg/m	No.
35-3	2	06 C-3	9,525	⅜	4,68	7,47	7,52	5,08	3,58	10,13	9,0	3,3	33,5	0,80	23,7	25,5	1,05	11,12,15
40-3		08 A-3	12,7	½	7,85	11,15	11,28	7,95	3,96	14,38	12,0	3,9	46,7	1,32	42,3	41,2	1,80	11,12,15
50-3		10 A-3	15,875	⅝	9,40	13,80	13,93	10,16	5,08	18,11	15,0	4,1	57,9	2,10	66,6	88,0	3,02	11,12,15
60-3	9	12 A-3	19,05	¾	12,57	17,70	17,85	11,91	5,94	22,78	18,0	4,6	72,6	3,15	95,4	105,0	4,70	11,111,12,15
80-3	9	16 A-3	25,4	1	15,75	22,50	22,70	15,88	7,92	29,29	24,1	5,4	91,7	5,35	170,1	193,0	7,50	11,111,12,15
100-3	9	20 A-3	31,75	1 ¼	18,90	27,40	27,60	19,05	9,53	35,76	30,1	6,1	113,0	7,83	265,5	305,0	11,20	111,12
120-3	9	24 A-3	38,1	1 ½	25,22	35,30	35,60	22,23	11,10	45,44	36,2	6,6	141,0	11,76	381,0	410,0	16,10	111,12
140-3	9	28 A-3	44,45	1 ¾	25,22	37,00	37,30	25,40	12,70	48,87	42,2	7,4	152,0	14,10	517,2	520,0	21,40	111,12
160-3	9	32 A-3	50,8	2	31,55	45,00	45,30	28,58	14,27	58,55	48,2	7,9	182,0	19,26	680,4	685,0	29,10	111,12
200-3	9	40 A-3	63,5	2 ½	37,85	54,70	55,00	39,68	19,84	71,55	60,3	10,0	223,0	32,56	1061,4	1095,0	50,00	111,12

Electrogalvanised or nickel-plated chains on request. In this case chains may only have 80 % of the tensile strength.

[2] without rollers (DIN 8154) [9] dismountable designs (with cottered/split pins) on request

For details on orders and enquiries see page 114. Sprockets on request.
Information on the selection of chain sizes and drives as of page 101.

Connecting links: According to DIN (...)

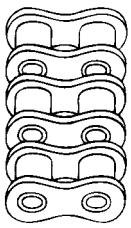

No. 4 (B)

Inner link

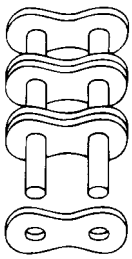

No. 7 (A)

Outer link
(to be riveted)

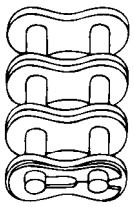

No. 11 (E)

Spring clip
connecting link

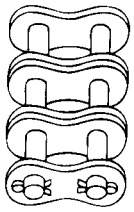

No. 111 (S)

Connecting link
with cottered pin

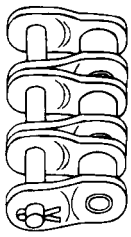

No. 12 (L)

Single
cranked link

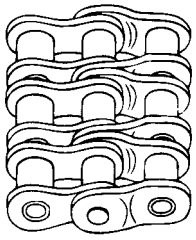

No. 15 (C)

Double
cranked link

Simplex chains

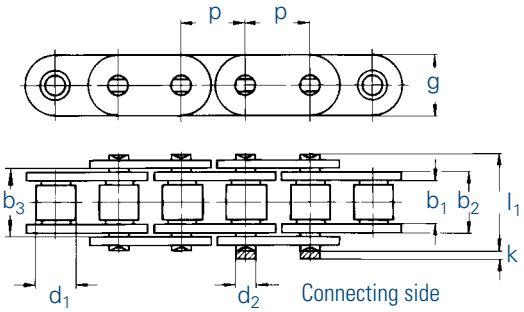

Duplex chains

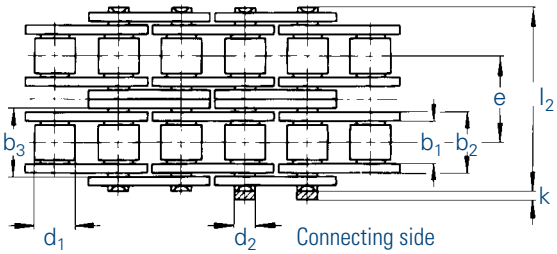

Triplex chains

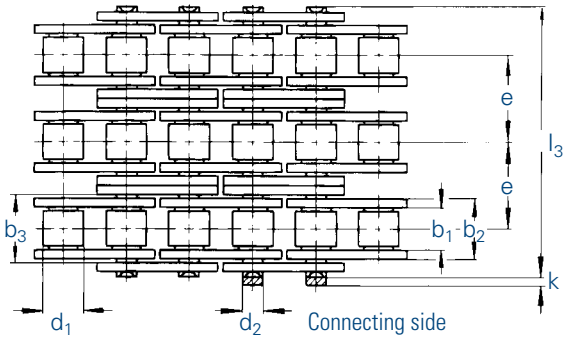

Chain		Pitch		Inner width	Inner link width	Outer plate width	Roller Ø	Pin Ø	Trans-verse pitch	Plate height	Projec-tion over connec-ting link	Width over pin	Bearing area	Minimum tensile strength DIN	Minimum tensile strength	Weight	Connecting links
		p		b_1 min.	b_2 max.	b_3 min.	d_1 max.	d_2 max.	e	g max.	k max.	l max.	f	F_B min.	F_B min.	q ≈	
No.	Ind.	mm	inch	mm	mm	mm	mm	mm	mm	mm	mm	mm	cm²	kN	kN	kg/m	No.
455 GL		9,525	⅜	5,72	8,53	8,66	6,35	3,28	-	8,2	3,3	13,5	0,28	9,0	9,6	0,41	4,7,11,12,15
462 GL		12,7	½	7,75	11,30	11,43	8,51	4,45	-	11,5	3,9	17,0	0,50	18,0	18,6	0,78	4,7,11,12
501 GL		15,875	⅝	9,65	13,28	13,41	10,16	5,08	-	14,2	4,1	19,6	0,67	22,4	27,0	1,03	4,7,11
513 GL		19,05	¾	11,68	15,62	15,75	12,07	5,72	-	15,5	4,6	22,7	0,89	29,0	31,0	1,29	4,7,11,12
60 GL		19,05	¾	12,57	17,70	17,85	11,91	5,94	-	18,0	4,6	26,9	1,05	31,8	41,0	1,58	4,7,11
60 HGL		19,05	¾	12,57	19,45	19,60	11,91	5,94	-	18,0	4,6	28,9	1,16	31,8	41,0	1,94	4,7,11
548 GL		25,4	1	17,02	25,40	25,60	15,88	8,28	-	24,0	5,4	36,1	2,10	60,0	72,0	3,29	4,7,11
548 GLS		25,4	1	17,02	25,40	25,60	15,88	8,28	-	21,0	5,4	36,1	2,10	60,0	72,0	2,90	4,7,11,12
563 GL		31,75	1 ¼	19,56	29,00	29,20	19,05	10,19	-	26,4	6,1	43,2	2,95	95,0	105,0	4,13	4,7,11,12
596 GL		38,1	1 ½	25,40	37,90	38,20	25,4	14,63	-	33,4	6,6	53,4	5,54	160,0	180,0	7,34	4,7,111,12
455 GL-2		9,525	⅜	5,72	8,53	8,66	6,35	3,28	10,24	8,2	3,3	23,8	0,56	16,9	17,4	0,86	4,7,11,12,15
462 GL-2		12,7	½	7,75	11,30	11,43	8,51	4,45	13,92	11,5	3,9	31,0	1,01	32,0	37,0	1,50	4,7,11,12
501 GL-2		15,875	⅝	9,65	13,28	13,41	10,16	5,08	16,59	14,2	4,1	36,2	1,34	44,5	54,0	2,00	4,7,11
513 GL-2		19,05	¾	11,68	15,62	15,75	12,07	5,72	19,46	15,5	4,6	42,2	1,79	57,8	63,0	2,62	4,7,11,12
60 GL-2		19,05	¾	12,57	17,70	17,85	11,91	5,94	22,78	18,0	4,6	49,8	2,10	63,6	76,0	3,08	4,7,11
548 GL-2		25,4	1	17,02	25,40	25,60	15,88	8,28	31,88	24,0	5,4	68,0	4,21	106,0	140,0	5,83	4,7,11
548 GLS-2		25,4	1	17,02	25,40	25,60	15,88	8,28	31,88	21,0	5,4	68,0	4,21	106,0	140,0	5,83	4,7,11
563 GL-2		31,75	1 ¼	19,56	29,00	29,20	19,05	10,19	36,45	26,4	6,1	79,0	5,91	170,0	210,0	8,03	4,7,11,12
596 GL-2		38,1	1 ½	25,40	37,92	38,20	25,4	14,63	48,36	33,4	6,6	101,0	11,09	280,0	360,0	14,47	4,7,111,12
455 GL-3		9,525	⅜	5,72	8,53	8,66	6,35	3,28	10,24	8,2	3,3	34,0	0,81	24,9	24,9	1,30	4,7,11,12,15
462 GL-3		12,7	½	7,75	11,30	11,43	8,51	4,45	13,92	11,5	3,9	44,9	1,51	47,5	56,0	2,21	4,7,11,12
501 GL-3		15,875	⅝	9,65	13,28	13,41	10,16	5,08	16,59	14,2	4,1	52,8	2,02	66,7	80,0	2,97	4,7,11
513 GL-3		19,05	¾	11,68	15,62	15,75	12,07	5,72	19,46	15,5	4,6	61,7	2,68	86,7	94,0	3,43	4,7,11,12
60 GL-3		19,05	¾	12,57	17,70	17,85	11,91	5,94	22,78	18,0	4,6	72,6	3,15	95,4	105,0	4,58	4,7,11
548 GL-3		25,4	1	17,02	25,40	25,60	15,88	8,28	31,88	24,0	5,4	99,9	6,31	160,0	211,0	8,25	4,7,11
548 GLS-3		25,4	1	17,02	25,40	25,60	15,88	8,28	31,88	21,0	5,4	99,9	6,31	160,0	211,0	8,25	4,7,11
563 GL-3		31,75	1 ¼	19,56	29,00	29,20	19,05	10,19	36,45	26,4	6,1	116,0	8,87	250,0	300,0	11,66	4,7,11,12
596 GL-3		38,1	1 ½	25,40	37,90	38,20	25,40	14,63	48,36	33,4	6,6	150,0	16,63	425,0	523,0	22,00	4,7,111,12

Electrogalvanised or nickel-plated chains on request. In this case chains may only have 80 % of the tensile strength.

For details on orders and enquiries see page 114. Standard sprockets as of page 61.
Information on the selection of chain sizes and drives as of page 101.

Type 1

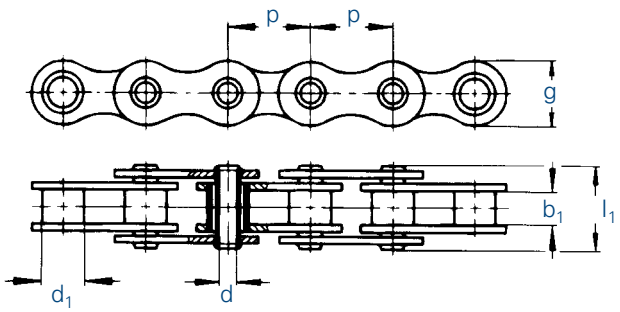

Type 2

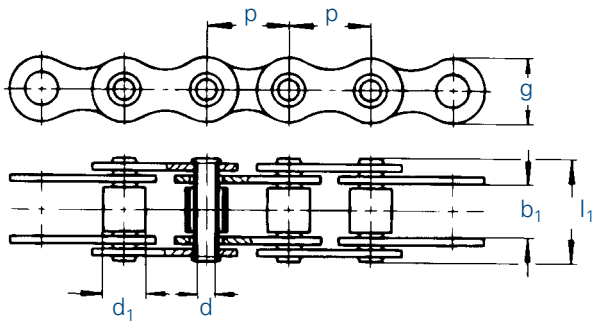

Type 3

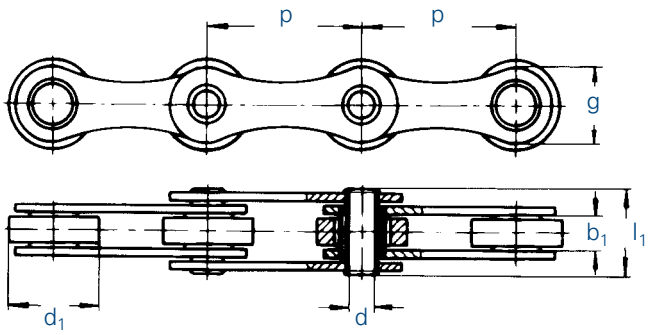

Chain		Pitch		Inner width	Roller (Bushing) Ø	Hollow pin		Plate height	Type	Bearing area	Minimum tensile strength	Weight
						Bore Ø	Width					
		p		b_1 min.	d_1 max.	d +0,1	l_1	g max.		f	F_B min.	q ≈
No.	Ind.	mm	inch	mm	mm	mm	mm	mm		cm²	kN	kg/m
01105		12,7	½	3,30	7,75	4,2	10,2	10,5	2	0,14	10,0	0,34
01462		12,7	½	7,75	8,51	4,0	17,0	12,2	1	0,68	10,0	0,65
01463		12,7	½	9,50	8,51	4,0	19,0	11,8	2	0,20	14,0	0,68
01500		15,875	⅝	6,50	10,16	5,0	17,0	14,7	2	0,28	15,0	0,74
01501		15,875	⅝	9,50	10,16	5,0	20,0	14,7	2	0,28	15,0	0,83
01513		19,05	¾	11,70	12,07	5,0	22,5	16,1	2	0,30	25,0	1,07
01589		38,1	1 ½	15,20	18,00	10,2	34,5	28,0	1	2,28	45,0	2,62
01598	1,3	50,0	-	15,00	26,00	14,4	35,6	40,0	1	4,20	100,0	4,10
01650	4,5	50,8	2	11,00	30,00	8,2	27,0	26,0	3	1,94	50,0	2,15
01650RF	4,5,6	50,8	2	11,00	30,00	8,2	27,0	26,0	3	1,94	32,0	2,15

Electrogalvanised or nickel-plated chains on request. In this case chains may only have 80 % of the tensile strength.

[1] with straight side plates [3] also supplied with small rollers 32 mm Ø (Type 3) [4] also with plastic rollers [5] support rollers [6] made of stainless and acid resistant steel W.-No. 1.4301

For details on orders and enquiries see page 114. Sprockets on request.
Information on the selection of chain sizes and drives as of page 101.

Hollow pin chains are to be connected by means of outer links (pin links). For the chains No. 01597 and No. 01598 straight connecting links with Seeger circlip ring can be supplied.

Type RK

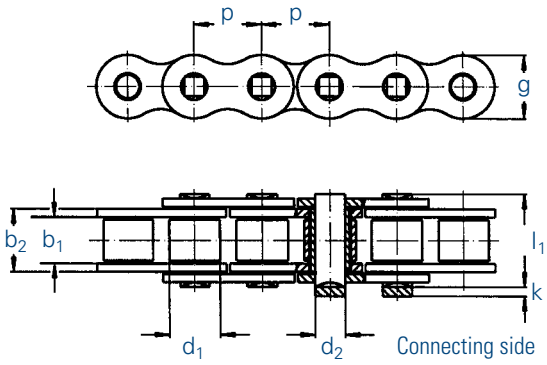

Type 1

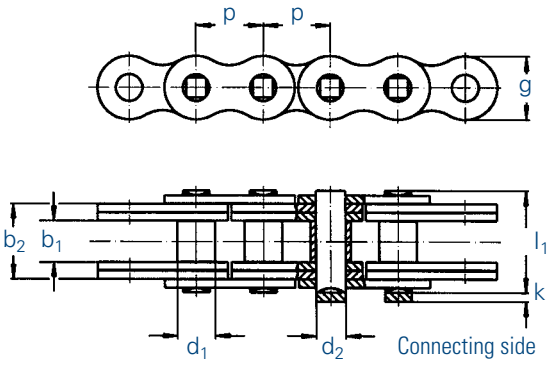

Type 2

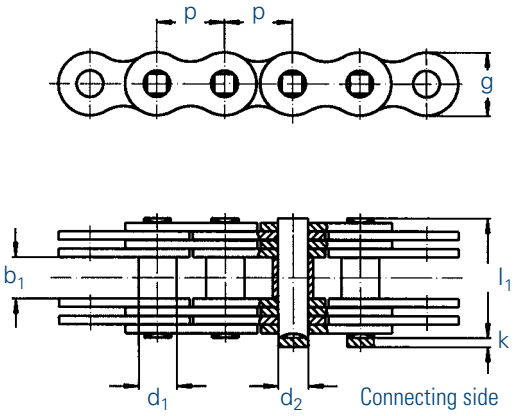

Type 3

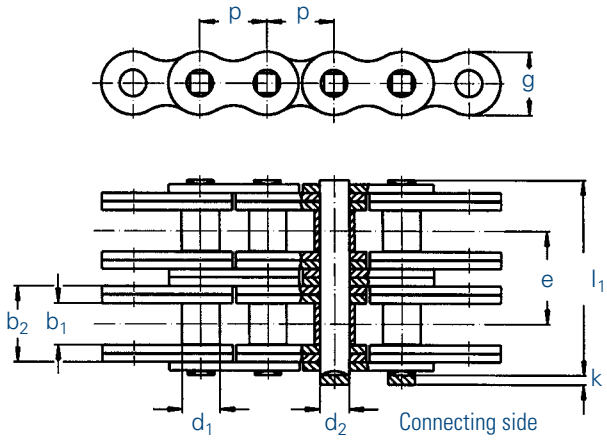

Chain		Pitch	Inner width	Inner link width	Roller Ø	Pin Ø	Plate height	Projection over connecting link	Width over pin	Bearing area	Minimum tensile strength	Weight	Type	Connecting links
		p	b_1 min.	b_2 max.	d_1 max.	d_2 max.	g max.	k max.	l max.	f	F_B min.	q ≈		
No.	Ind.	mm	mm	mm	mm	mm	mm	mm	mm	cm^2	kN	kg/m		No.
548 GLX		25,40	17,02	25,40	15,88	8,28	24,0	5,4	36,1	2,10	85,0	3,29	RK	4, 7, 111
563 GLX		31,75	19,56	29,00	19,05	10,19	26,4	6,1	43,2	2,96	123,0	4,13	RK	4, 7, 111
596 R		38,10	25,40	37,90	25,40	13,50	36,0	6,6	53,4	5,12	200,0	7,10	RK	4, 7, 111
596 SX		38,10	25,40	39,90	25,40	14,63	36,0	6,6	56,5	5,84	235,0	8,20	RK	4, 7, 111

Port chains

671 SX		63,50	38,10	55,70	39,37	22,85	60,3	10,0	82,6	12,76	500,0	18,70	RK	4, 7, 111
671 VX		63,50	38,10	79,40	39,37	30,00	60,3	10,0	112,0	12,00	650,0	24,20	1	4, 7, 111
160 VS		50,80	31,55	57,80	28,58	20,20	48,2	7,9	76,2	5,17	342,0	14,40	2	4, 7, 111
160 VS-2	[8]	50,80	31,55	57,80	28,58	20,20	48,2	7,9	147,0	10,34	640,0	28,80	3	4, 7, 111

[8] e = 70,4

For details on orders and enquiries see page 114. Sprockets on request.

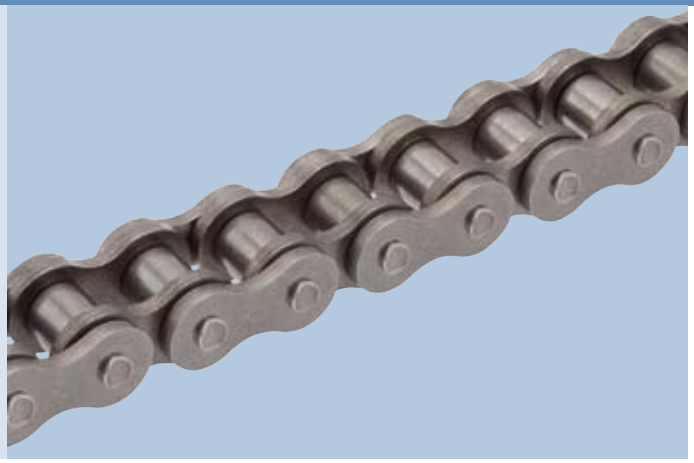

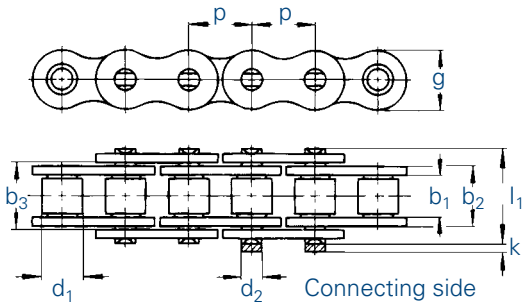

Type series HX with reinforced plates and pins made of quenched and tempered steel

Chain		Pitch		Inner width	Inner link width	Outer plate width	Roller Ø	Pin Ø	Plate height	Projection over connecting link	Width over pin	Bearing area	Minimum tensile strength	Weight	Connecting links
		p		b_1 min.	b_2 max.	b_3 min.	d_1 max.	d_2 max.	g max.	k max.	l_1 max.	f	F_B min.	q ≈	
No.	Ind.	mm	inch	mm	mm	mm	mm	mm	mm	mm	mm	cm^2	kN	kg/m	No.
50 HX		15,875	⅝	9,40	14,60	14,73	10,16	5,08	15,0	4,1	23,4	0,75	33,4	1,18	4,7,11
60 HX		19,05	¾	12,57	19,45	19,60	11,91	5,94	18,0	4,6	28,9	1,16	50,0	1,94	4,7,11
80 HX		25,4	1	15,75	24,28	24,49	15,88	7,92	24,1	5,4	37,0	1,92	75,6	3,04	4,7,111
100 HX		31,75	1¼	18,90	29,10	29,30	19,05	9,53	30,1	6,1	44,0	2,77	113,4	4,25	4,7,111
120 HX		38,1	1½	25,22	37,18	37,48	22,23	11,10	36,2	6,6	54,0	4,13	155,7	6,80	4,7,111
140 HX		44,45	1¾	25,22	38,85	39,15	25,40	12,70	42,2	7,4	58,0	4,94	209,1	7,90	4,7,111
160 HX		50,8	2	31,55	46,88	47,20	28,58	14,27	48,2	7,9	68,0	6,70	266,9	10,40	4,7,111
200 HX		63,5	2½	37,85	58,29	58,60	39,68	19,84	60,3	10,0	84,0	11,60	442,2	19,50	4,7,111

For details on orders and enquiries see page 114. Sprockets on request.

Connecting links: According to DIN (...)

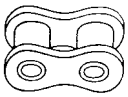

No. 4 (B)

Inner link

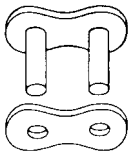

No. 7 (A)

Outer link
(to be riveted)

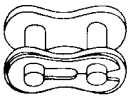

No. 11 (E)

Spring clip
connecting link

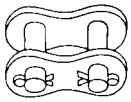

No. 111 (S)

Connecting link
with cottered pin

MARATHON, the long distance chain that needs no relubrication:

- High-performance bearing joints
- Tensile strength according to WIPPERMANN standard
- Electrogalvanised surface for optimum protection
- Bushings with slight projection over plates

Advantages of the WIPPERMANN MARATHON chain:

- Up to 35 times longer wear life in comparison with other standard roller chains without lubrication
- Up to 5 times longer wear life than other maintenance-free chains
- No relubrication required
- Clean application with no soiling of machinery and transported goods
- Joint bushings made with a new type of sintered metal with high strength treated with a special lubricant
- Bushings longer than the width of the chain link with sliding contact to the outer plate
- The pins forming the joints with these bushings are made of alloyed hardened steel and are treated with a special coating. The resulting high-wearing coat guarantees an excellent sliding performance.
- Same tensile strength as with WIPPERMANN standard chains
- All MARATHON chains fit standard sprockets

Range of application for WIPPERMANN MARATHON chains:

- Temperatures from 0°C to +100°C
- With special lubrication from -30°C to +250°C (after consultation)
- Speeds of up to v = 150 m/min.
- Food industry
- Electrical industry
- Production of printed circuit boards (PCBs)
- Television industry
- Packing industry
- Paper processing
- Printing industry
- Bookbinding industry
- Textile industry
- Automotive industry
- All systems where relubrication is either not wanted, problematic or not possible at all.

www.bergab.ru Берг АБ bergab@ya.ru Тел. (495)-228-06-21, факс (495) 223-3071

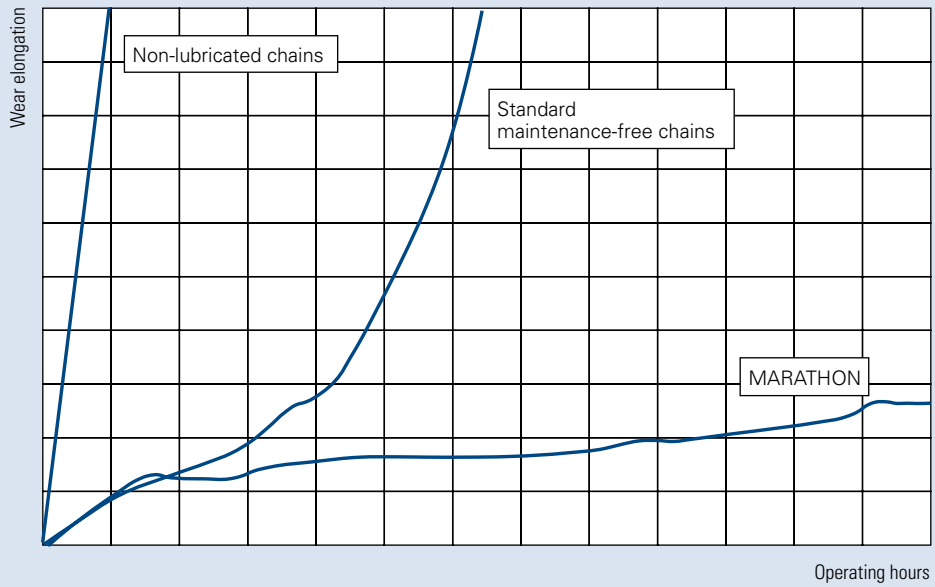

Results of long-term wear tests

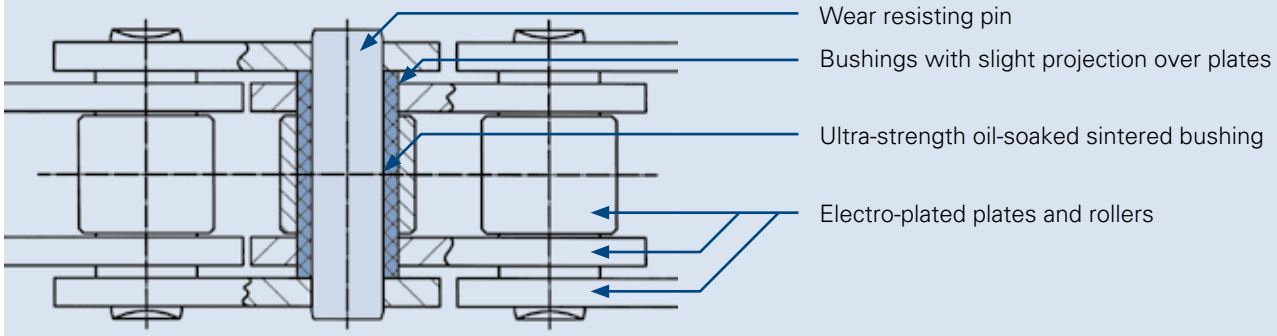

WIPPERMANN jr. GmbH
58091 Hagen
Delsterner Straße 133

Force projection diagram

Type of test: Tensile test
Object: 548 Marathon chain
Test length: 5 links

Minimum tensile strength: 78,000 N
Breaking point: Pins

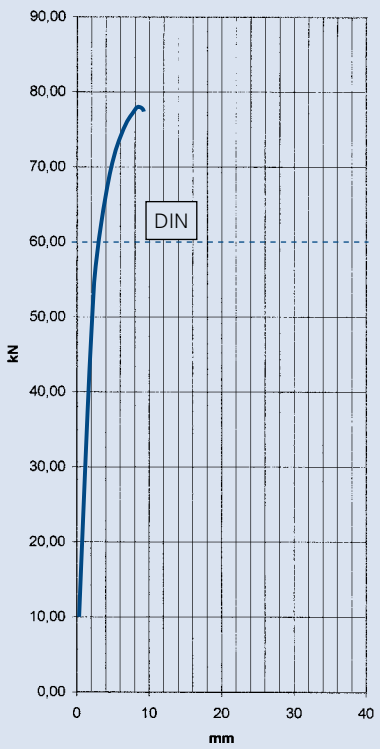

Simplex chains

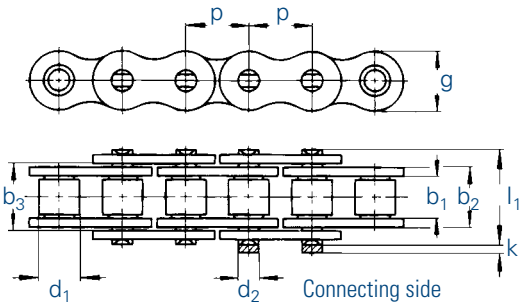

Duplex chains

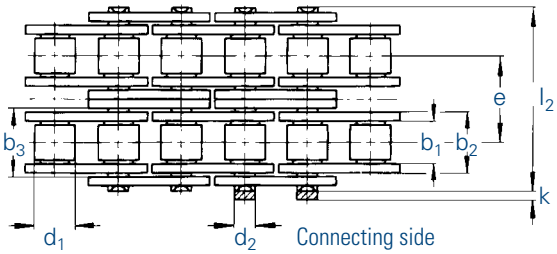

Triplex chains

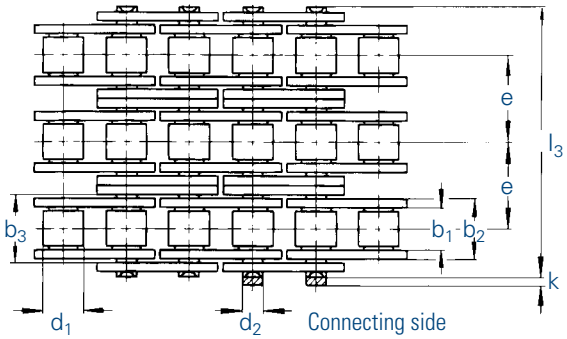

Chain		Pitch		Inner width	Inner link width	Outer plate width	Roller Ø	Pin Ø	Trans-verse pitch	Plate height	Projec-tion over connec-ting link	Width over pin	Bearing area	Minimum tensile strength	Weight	Connecting links
		p		b_1 min.	b_2 max.	b_3 min.	d_1 max.	d_2 max.	e	g max.	k max.	l max.	f	F_B min.	q ≈	
No.	Ind.	mm	inch	mm	mm	mm	mm	mm	mm	mm	mm	mm	cm²	kN	kg/m	No.
06 B-1 MA		9,525	⅜	5,72	8,53	8,66	6,35	3,28	-	8,2	3,3	13,5	0,28	9,6	0,41	11,12,15
08 B-1 MA		12,7	½	7,75	11,30	11,43	8,51	4,45	-	11,8	3,9	17,0	0,50	18,6	0,70	11,12,15
10 B-1 MA		15,875	⅝	9,65	13,28	13,41	10,16	5,08	-	14,7	4,1	19,6	0,67	27,0	0,91	11,12,15
12 B-1 MA		19,05	¾	11,68	15,62	15,75	12,07	5,72	-	16,1	4,6	22,7	0,89	31,0	1,18	11,12,15
16 B-1 MA		25,4	1	17,02	25,40	25,60	15,88	8,28	-	21,0	5,4	36,1	2,10	72,0	2,68	11,111,12
552 MA		30,0	-	17,02	25,40		15,88	8,28	-	21,0	5,4	36,1	2,10	72,0	2,50	11,111,12
20 B-1 MA		31,75	1 ¼	19,56	29,00	29,20	19,05	10,19	-	26,4	6,1	43,2	2,96	105,0	3,50	111, 12
24 B-1 MA		38,1	1 ½	25,40	37,90	38,20	25,40	14,63	-	33,4	6,6	53,4	5,54	180,0	6,80	111, 12
06 B-2 MA		9,525	⅜	5,72	8,53	8,66	6,35	3,28	10,24	8,2	3,3	23,8	0,56	17,4	0,78	11,12,15
08 B-2 MA		12,7	½	7,75	11,30	11,43	8,51	4,45	13,92	11,8	3,9	31,0	1,01	37,0	1,36	11,12,15
10 B-2 MA		15,875	⅝	9,65	13,28	13,41	10,16	5,08	16,59	14,7	4,1	36,2	1,34	54,0	1,82	11,12,15
12 B-2 MA		19,05	¾	11,68	15,62	15,75	12,07	5,72	19,46	16,1	4,6	42,2	1,79	63,0	2,38	11,12,15
16 B-2 MA		25,4	1	17,02	25,40	25,60	15,88	8,28	31,88	21,0	5,4	68,0	4,21	140,0	5,30	11,111,12
20 B-2 MA		31,75	1 ¼	19,56	25,40	29,20	19,05	10,19	36,45	26,4	6,1	79,0	5,91	210,0	7,30	111, 12
24 B-2 MA		38,1	1 ½	25,40	37,90	38,20	25,40	14,63	48,36	33,4	6,6	101,0	11,09	360,0	13,40	111, 12
06 B-3 MA		9,525	⅜	5,72	8,53	8,66	6,35	3,28	10,24	8,2	3,3	34,0	0,81	24,9	1,18	11,12,15
08 B-3 MA		12,7	½	7,75	11,30	11,43	8,51	4,45	13,92	11,8	3,9	44,9	1,51	56,0	2,01	11,12,15
10 B-3 MA		15,875	⅝	9,65	13,28	13,41	10,16	5,08	16,59	14,7	4,1	52,8	2,02	80,0	2,70	11,12,15
12 B-3 MA		19,05	¾	11,68	15,62	15,75	12,07	5,72	19,46	16,1	4,6	61,7	2,68	94,0	3,12	11,12,15
16 B-3 MA		25,4	1	17,02	25,40	25,60	15,88	8,28	31,88	21,0	5,4	99,9	6,31	211,0	7,50	11,111,12
20 B-3 MA		31,75	1 ¼	19,56	29,00	29,20	19,05	10,19	36,45	26,4	6,1	116,0	8,87	300,0	10,60	111, 12
24 B-3 MA		38,1	1 ½	25,40	37,90	38,20	25,40	14,63	48,36	33,4	6,6	150,0	16,63	523,0	20,00	111, 12

Standard sprockets can be used for these chains.

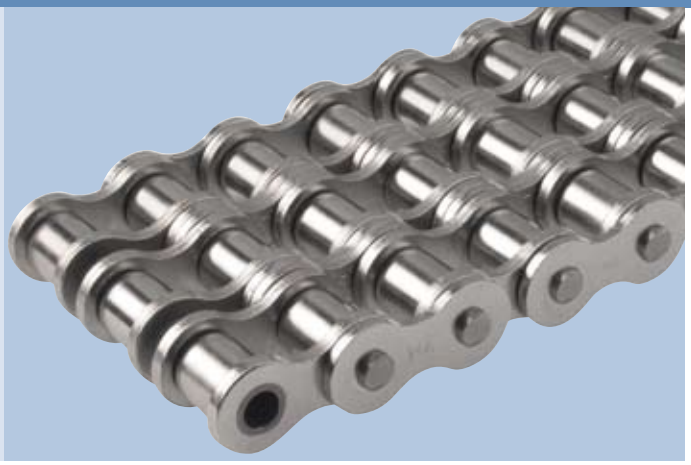

Simplex chains

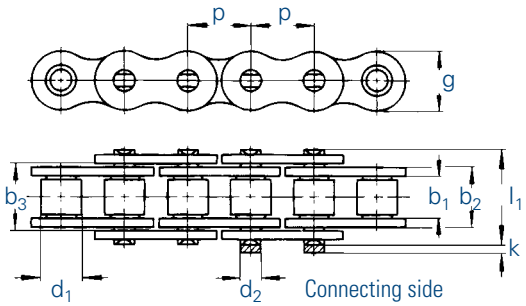

Duplex chains

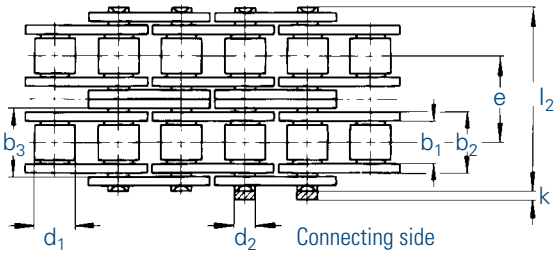

Triplex chains

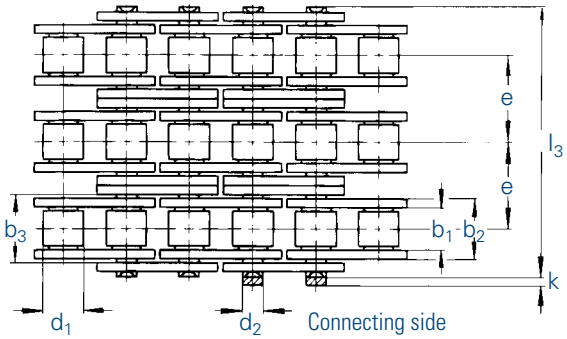

Chain		Pitch		Inner width	Inner link width	Outer plate width	Roller Ø	Pin Ø	Trans-verse pitch	Plate height	Projec-tion over connec-ting link	Width over pin	Bearing area	Minimum tensile strength	Weight	Connecting links
		p		b_1 min.	b_2 max.	b_3 min.	d_1 max.	d_2 max.	e	g max.	k max.	l max.	f	F_B min.	q ≈	
No.	Ind.	mm	inch	mm	mm	mm	mm	mm	mm	mm	mm	mm	cm²	kN	kg/m	No.
08 A-1 MA		12,7	½	7,85	11,15	11,28	7,95	3,96	-	12,0	3,9	17,8	0,44	16,5	0,60	11,12,15
10 A-1 MA		15,875	⅝	9,40	13,80	13,93	10,16	5,08	-	15,0	4,1	21,8	0,70	30,0	1,01	11,12,15
12 A-1 MA		19,05	¾	12,57	17,70	17,85	11,91	5,94	-	18,0	4,6	26,9	1,05	40,0	1,58	11,111,12,15
16 A-1 MA		25,4	1	15,75	22,50	22,70	15,88	7,92	-	24,1	5,4	33,5	1,78	69,0	2,36	11,111,12,15
20 A-1 MA		31,75	1 ¼	18,90	27,40	27,60	19,05	9,53	-	30,1	6,1	41,1	2,61	92,5	3,80	111,12
24 A-1 MA		38,1	1 ½	25,22	35,30	35,60	22,23	11,10	-	36,2	6,6	50,8	3,92	139,0	5,40	111,12
08 A-2 MA		12,7	½	7,85	11,15	11,28	7,95	3,96	14,38	12,0	3,9	32,3	0,88	29,7	1,20	11,12,15
10 A-2 MA		15,875	⅝	9,40	13,80	13,93	10,16	5,08	18,11	15,0	4,1	39,9	1,40	62,0	1,78	11,12,15
12 A-2 MA		19,05	¾	12,57	17,70	17,85	11,91	5,94	22,78	18,0	4,6	49,8	2,10	76,0	3,15	11,111,12,15
16 A-2 MA		25,4	1	15,75	22,50	22,70	15,88	7,92	29,29	24,1	5,4	62,7	3,56	135,0	4,90	11,111,12,15
20 A-2 MA		31,75	1 ¼	18,90	27,40	27,60	19,05	9,53	35,76	30,1	6,1	77,0	5,22	205,0	7,60	111,12
24 A-2 MA		38,1	1 ½	25,22	35,30	35,60	22,23	11,10	45,44	36,2	6,6	96,3	7,84	290,0	10,80	111,12
08 A-3 MA		12,7	½	7,85	11,15	11,28	7,95	3,96	14,38	12,0	3,9	46,7	1,32	41,2	1,80	11,12,15
10 A-3 MA		15,875	⅝	9,40	13,80	13,93	10,16	5,08	18,11	15,0	4,1	57,9	2,10	88,0	3,02	11,12,15
12 A-3 MA		19,05	¾	12,57	17,70	17,85	11,91	5,94	22,78	18,0	4,6	72,6	3,15	105,0	4,70	11,111,12,15
16 A-3 MA		25,4	1	15,75	22,50	22,70	15,88	7,92	29,29	24,1	5,4	91,7	5,35	193,0	7,50	11,111,12,15
20 A-3 MA		31,75	1 ¼	18,90	27,40	27,60	19,05	9,53	35,76	30,1	6,1	113,0	7,83	305,0	11,20	111,12
24 A-3 MA		38,1	1 ½	25,22	35,30	35,60	22,23	11,10	45,44	36,2	6,6	141,0	11,76	410,0	16,10	111,12

Sprockets on request.

Simplex chains

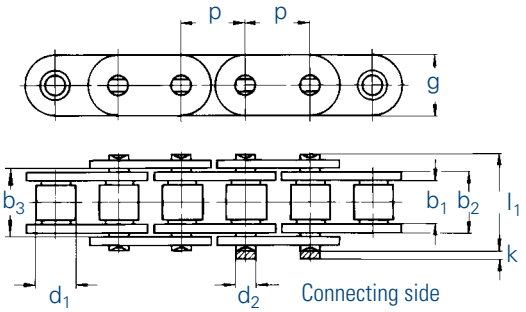

Duplex chains

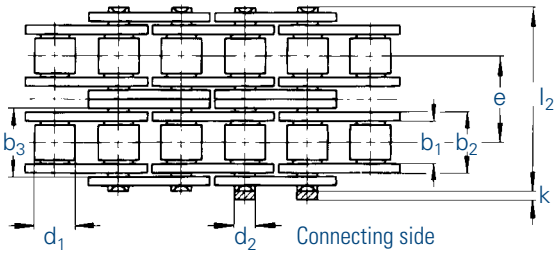

Triplex chains

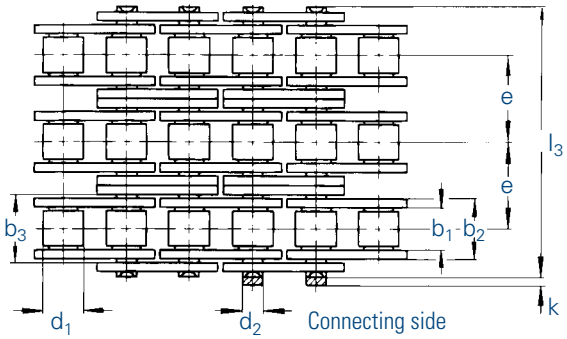

Chain		Pitch		Inner width	Inner link width	Outer plate width	Roller Ø	Pin Ø	Trans-verse pitch	Plate height	Projec-tion over connec-ting link	Width over pin	Bearing area	Minimum tensile strength	Weight	Connecting links
		p		b_1 min.	b_2 max.	b_3 min.	d_1 max.	d_2 max.	e	g max.	k max.	l max.	f	F_B min.	q ≈	
No.	Ind.	mm	inch	mm	mm	mm	mm	mm	mm	mm	mm	mm	cm²	kN	kg/m	No.
455 GL	MA	9,525	⅜	5,72	8,53	8,66	6,35	3,28	-	8,2	3,3	13,5	0,28	9,6	0,41	4,7,11,12,15
462 GL	MA	12,7	½	7,75	11,30	11,43	8,51	4,45	-	11,5	3,9	17,0	0,50	18,6	0,78	4,7,11,12
501 GL	MA	15,875	⅝	9,65	13,28	13,41	10,16	5,08	-	14,2	4,1	19,6	0,67	27,0	1,03	4,7,11
513 GL	MA	19,05	¾	11,68	15,62	15,75	12,07	5,72	-	15,5	4,6	22,7	0,89	31,0	1,29	4,7,11,12
548 GL	MA	25,4	1	17,02	25,40	25,60	15,88	8,28	-	24,0	5,4	36,1	2,10	72,0	3,29	4,7,11
548 GLS	MA	25,4	1	17,02	25,40	25,60	15,88	8,28	-	21,0	5,4	36,1	2,10	72,0	2,90	4,7,11,12
563 GL	MA	31,75	1 ¼	19,56	29,00	29,20	19,05	10,19	-	26,4	6,1	43,2	2,95	105,0	4,13	4,7,11,12
596 GL	MA	38,1	1 ½	25,40	37,90	38,20	25,40	14,63	-	33,4	6,6	53,4	5,54	180,0	7,34	4,7,111,12
455 GL-2	MA	9,525	⅜	5,72	8,53	8,66	6,35	3,28	10,24	8,2	3,3	23,8	0,56	17,4	0,86	4,7,11,12,15
462 GL-2	MA	12,7	½	7,75	11,30	11,43	8,51	4,45	13,92	11,5	3,9	31,0	1,01	37,0	1,50	4,7,11,12
501 GL-2	MA	15,875	⅝	9,65	13,28	13,41	10,16	5,08	16,59	14,2	4,1	36,2	1,34	54,0	2,00	4,7,11
513 GL-2	MA	19,05	¾	11,68	15,62	15,75	12,07	5,72	19,46	15,5	4,6	42,2	1,79	63,0	2,62	4,7,11,12
548 GL-2	MA	25,4	1	17,02	25,40	25,60	15,88	8,28	31,88	24,0	5,4	68,0	4,21	140,0	5,83	4,7,11
563 GL-2	MA	31,75	1 ¼	19,56	29,00	29,20	19,05	10,19	36,45	26,4	6,1	79,0	5,81	210,0	8,03	4,7,11,12
596 GL-2	MA	38,1	1 ½	25,40	37,92	38,20	25,40	14,63	48,36	33,4	6,6	101,0	11,09	360,0	14,47	4,7,111,12
455 GL-3	MA	9,525	⅜	5,72	8,53	8,66	6,35	3,28	10,24	8,2	3,3	34,0	0,81	24,9	1,30	4,7,11,12,15
462 GL-3	MA	12,7	½	7,75	11,30	11,43	8,51	4,45	13,92	11,5	3,9	44,9	1,51	56,0	2,21	4,7,11,12
501 GL-3	MA	15,875	⅝	9,65	13,28	13,41	10,16	5,08	16,59	14,2	4,1	52,8	2,02	80,0	2,97	4,7,11
513 GL-3	MA	19,05	¾	11,68	15,62	15,75	12,07	5,72	19,46	15,5	4,6	61,7	2,68	94,0	3,43	4,7,11,12
548 GL-3	MA	25,4	1	17,02	25,40	25,60	15,88	8,28	31,88	24,0	5,4	99,9	6,31	211,0	8,25	4,7,11
563 GL-3	MA	31,75	1 ¼	19,56	29,00	29,20	19,05	10,19	36,45	26,4	6,1	116,0	8,87	300,0	11,66	4,7,11,12
596 GL-3	MA	38,1	1 ½	25,40	37,90	38,20	25,40	14,63	48,36	33,4	6,6	150,0	16,63	523,0	22,00	4,7,111,12

Sprockets on request.

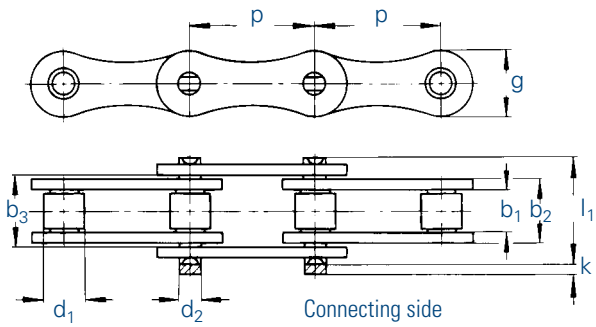

Chain		Pitch		Inner width	Inner link width	Outer plate width	Roller Ø	Pin Ø	Plate height	Projection over connecting link	Width over pin	Bearing area	Minimum tensile strength	Weight
		p		b_1 min.	b_2 max.	b_3 min.	d_1 max.	d_2 max.	g max.	k max.	l_1 max.	f	F_B min.	q ≈
No.	Ind.	mm	inch	mm	mm	mm	mm	mm	mm	mm	mm	cm^2	kN	kg/m
208 B MA		25,4	1	7,75	11,30	11,43	8,51	4,45	11,8	3,9	17,0	0,50	18,0	0,48
210 B MA		31,75	1 ¼	9,65	13,28	13,40	10,16	5,08	14,7	4,1	19,6	0,67	22,4	0,55
212 B MA		38,1	1 ½	11,68	15,62	15,75	12,07	5,72	16,1	4,6	22,7	0,89	29,0	0,80
216 B MA		50,8	2	17,02	25,40	25,60	15,88	8,28	21,0	5,4	36,1	2,10	60,0	1,74
220 B MA		63,5	2 ½	19,56	29,00	29,20	19,05	10,19	26,4	6,1	43,2	2,96	95,0	2,55

Sprockets for double pitch roller chains can be used for these chains.

Connecting links: According to DIN (...)

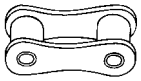

No. 4 (B)

Inner link

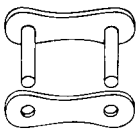

No. 7 (A)

Outer link
(to be riveted)

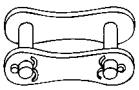

No. 111 (S)

Connecting link with cottered pin
for chain No. 713 with spring clip (E)

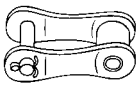

No. 12 (L)

Single cranked link

Design E

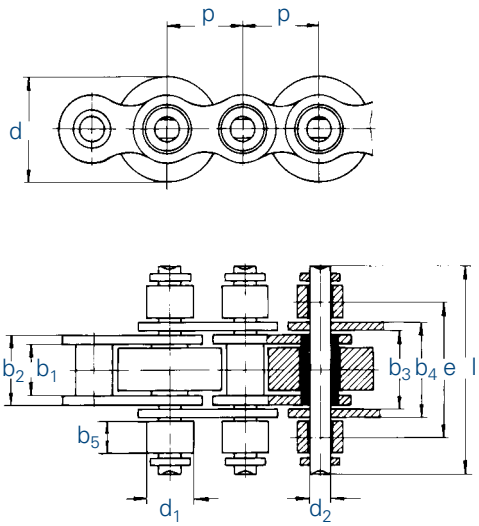

Double pitch chain Design L

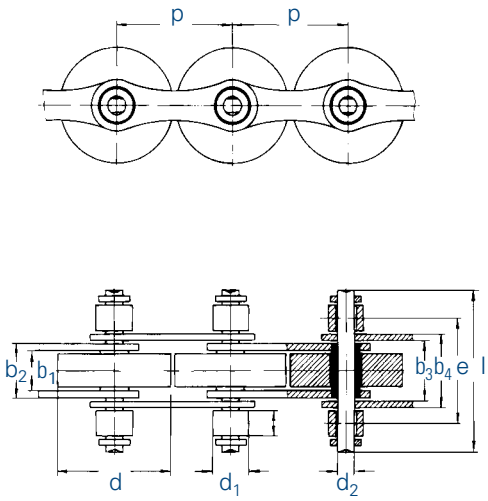

Chain		Pitch		Inner width	Inner link width	Width between outer plates		Support roller Ø	Pin Ø	Transverse pitch	Plate height	Width over pin	Support roller width	Width over pin Type I	Support roller width
		p	Design	b_1 min.	b_2 max.	b_3 min.	b_4 max.	d_1	d_2 max.	e	g max.	l max.	b_5 max.	l max.	b_5 max.
No.	Ind.	mm		mm	mm	mm	mm	mm	mm	mm	mm	mm	mm	mm	mm
513 SF MA		19,05	E	11,68	15,62	15,80	20,0	12,00	5,72	31,50	16,1	48,0	11,5	43,0	9,0
548 SF MA		25,4	E	17,02	25,45	25,81	32,0	15,88	8,28	44,50	21,0	65,0	12,5	-	-
722 SF MA		38,1	L	11,68	15,62	15,80	20,0	12,00	5,72	31,50	16,1	48,0	11,5	-	-
728 SF MA		50,8	L	17,02	25,45	25,81	32,0	15,88	8,28	44,50	21,0	65,0	12,5	-	-
D 513 SF MA		19,05	D	11,68	15,62	15,80	20,0	12,07	5,72	52,00	16,1	68,0	11,5	-	-
D 548 SF MA		25,4	D	17,02	25,45	25,81	32,0	15,88	8,28	76,76	21,0	97,0	12,5	-	-
T 513 SF MA		19,05	T	11,68	15,62	15,80	20,0	12,07	5,72	38,92	16,1	61,7	-	-	-
T 548 SF MA		25,4	T	17,02	25,45	25,81	32,0	15,88	8,28	63,76	21,0	99,9	-	-	-

Sprockets are available for all accumulator chains!

Connecting links with securing circlips.
Our connecting links always have the same length l as the ordinary pins.

Temperature range: - 30 to 100°C for steel conveyor rollers
- 10 to 60°C for plastic conveyor rollers

Design D

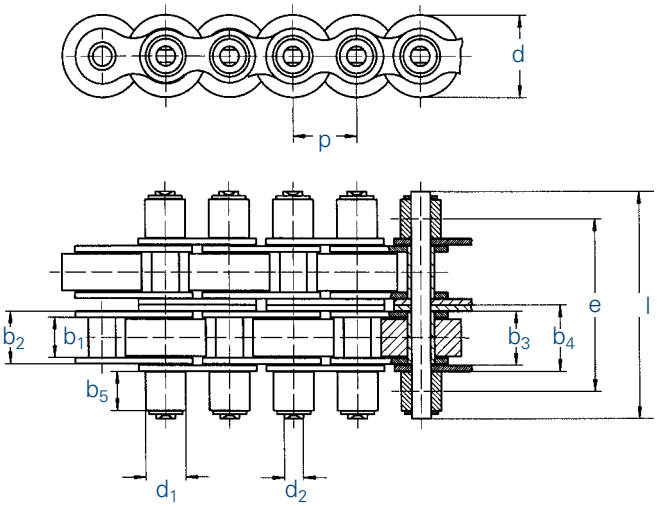

Design T

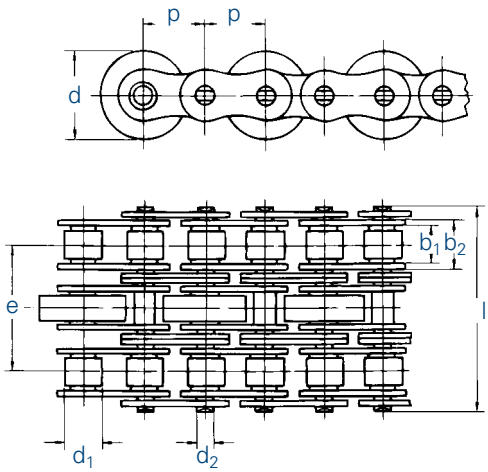

Width over pin Type II	Support roller width	Conveyor rollers						Minimum tensile strength	Maximum load per m conveyor chain with 10 m conveyor length	
		Designation for material			Diameter					
						Type I	Type II			
l max.	b_5 max.	Steel	PA 6.6	Vestamide	d	d	d	F_B min.	Steel	Plastic
mm.	mm				mm	mm	mm	kN	kg	kg
40,0	7,5	SF	SFK	SFV	24,0	26,0	28,0	29,0	300	260
-	-	SF	SFK	SFV	38,5	-	-	60,0	600	500
-	-	SF	SFK	SFV	24,0	26,0	28,0	29,0	300	260
-	-	SF	SFK	SFV	38,5	40,0	50,0	60,0	600	500
-	-	SF	SFK	SFV	24,0	26,0	28,0	57,8	600	520
-	-	SF	SFK	SFV	38,5	-	-	120,0	1200	1000
-	-	SF	SFK	SFV	24,0	26,0	28,0	60,0	600	260
-	-	SF	SFK	SFV	38,5	-	-	120,0	1200	500

The load per m applies for 10 m conveyor length per double chain strand. The load may be proportionally increased for shorter chain lengths and must be proportionally decreased for longer conveyor distances: e.g. 5 m conveyor distance = double load, 20 m conveyor distance = half load.

Maximum conveyor distances 25 - 30 m. The installation of guide plates is recommended as of 15 m.

High performance polymer bearing (TRIGLEIT)

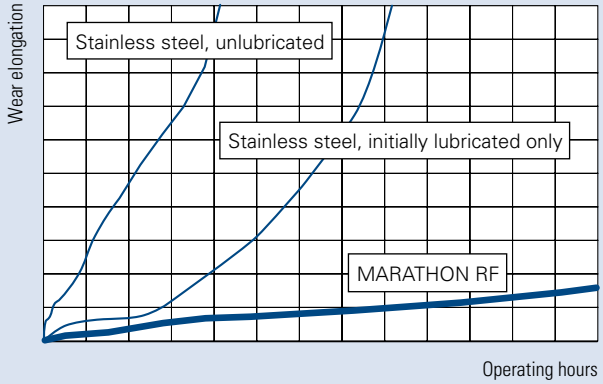

Results of long-term wear tests

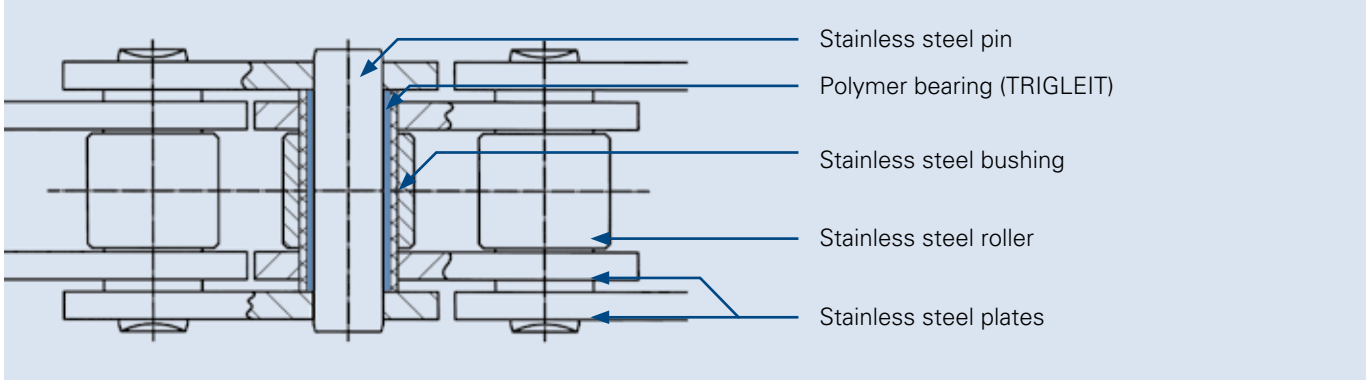

High performance polymer bearings (TRIGLEIT) allow operation of stainless steel chains without relubrication!

- durable and low-friction polymer bearing (TRIGLEIT)
- all other chain components made of stainless steel grades
- maximum chain speed v = 2,5 m/s
- working temperature -30˚ C to +60˚ C (higher temperatures on request)
- chain dimensions according to DIN 8187; standard stainless steel sprockets can be used
- no relubrication required
- relubrication with mineral oils possible (no ester oils)
- can also be supplied with extended pins, straight attachments, bent attachments and in special designs
- information on chemical resistance on request

Application areas:

- Packing industry
- Chemical industry
- Pharmaceutical industry
- Textile industry
- Food industry
- Sanitation industry
- Electrical industry

Simplex chains

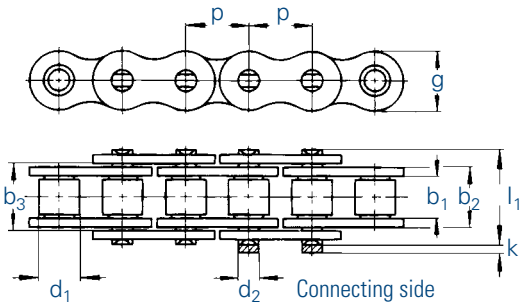

Simplex chains (Type GL)

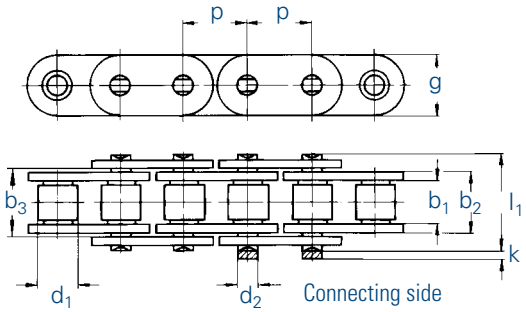

Duplex chains

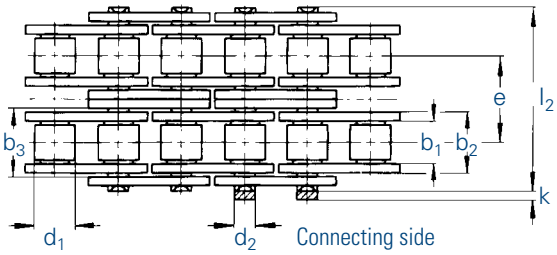

Triplex chains

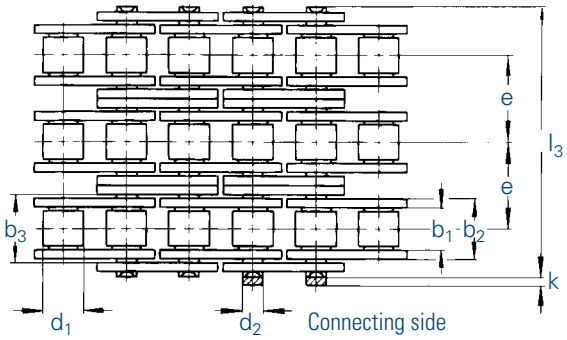

Chain		DIN	Pitch		Inner width	Inner link width	Outer plate width	Roller Ø	Pin Ø	Trans-verse pitch	Plate height	Projec-tion over connec-ting link	Width over pin	Bearing area	Minimum tensile strength	Weight	Connecting links
			p		b_1 min.	b_2 max.	b_3 min.	d_1 max.	d_2 max.	e	g max.	k max.	l max.	f	F_B min.	q ≈	
No.	Ind.	No.	mm	inch	mm	mm	mm	mm	mm	mm	mm	mm	mm	cm²	kN	kg/m	No.
462 RF MA		08 B-1	12,7	½	7,75	11,30	11,43	8,51	4,45	-	11,8	3,9	17,0	0,50	12,00	0,70	4,7,11,12,15
501 RF MA		10 B-1	15,875	⅝	9,65	13,28	13,41	10,16	5,08	-	14,7	4,1	19,6	0,67	14,50	0,91	4,7,11,12,15
513 RF MA		12 B-1	19,05	¾	11,68	15,62	15,75	12,07	5,72	-	16,1	4,6	22,7	0,89	18,50	1,18	4,7,11,12,15
548 RF MA		16 B-1	25,4	1	17,02	25,40	25,60	15,88	8,28	-	21,0	5,4	36,1	2,10	40,00	2,50	4,7,111,12
D 462 RF MA		08 B-2	12,7	½	7,75	11,30	11,43	8,51	4,45	13,92	11,8	3,9	31,0	1,01	20,40	1,36	4,7,11,12,15
D 501 RF MA		10 B-2	15,875	⅝	9,65	13,28	13,41	10,16	5,08	16,59	14,7	4,1	36,2	1,34	24,65	1,82	4,7,11,12,15
D 513 RF MA		12 B-2	19,05	¾	11,68	15,62	15,75	12,07	5,72	19,46	16,1	4,6	42,2	1,79	31,45	2,38	4,7,11,12,15
D 548 RF MA		16 B-2	25,4	1	17,02	25,40	25,60	15,88	8,28	31,88	21,0	5,4	68,0	4,21	68,00	5,10	4,7,111,12
T 462 RF MA		08 B-3	12,7	½	7,75	11,30	11,43	8,51	4,45	13,92	11,8	3,9	44,9	1,51	32,50	2,01	4,7,11,12,15
T 501 RF MA		10 B-3	15,875	⅝	9,65	13,28	13,41	10,16	5,08	16,59	14,7	4,1	52,8	2,02	39,00	2,70	4,7,11,12,15
T 513 RF MA		12 B-3	19,05	¾	11,68	15,62	15,75	12,07	5,72	19,46	16,1	4,6	61,7	2,68	49,50	3,12	4,7,11,12,15
T 548 RF MA		16 B-3	25,4	1	17,02	25,40	25,60	15,88	8,28	31,88	21,0	5,4	99,9	6,31	108,00	7,50	4,7,111,12

Can also be supplied with attachments, straight plates (type series GL) and as double pitch roller chains (dimensions according to DIN 8181). Chains 548 available as type series GLS with plate height g = 21 mm (max.) and as type series GL with g = 24 mm (max.). Sprockets on request.

Connecting links: According to DIN (...)

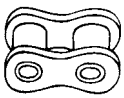

No. 4 (B)

Inner link

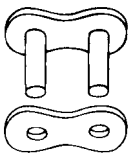

No. 7 (A)

Outer link
(to be riveted)

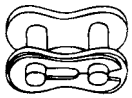

No. 11 (E)

Spring clip
connecting link

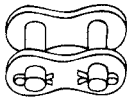

No. 111 (S)

Connecting link
with cottered pin

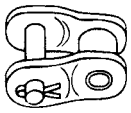

No. 12 (L)

Single
cranked link

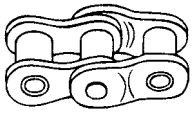

No. 15 (C)

Double
cranked link

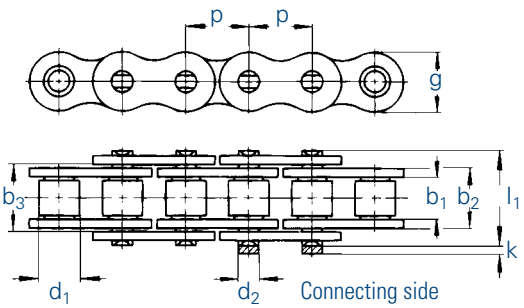

Chain		Pitch	Inner width	Inner link width	Outer plate width	Roller Ø	Pin Ø	Plate height	Projection over connecting link	Width over pin	Bearing area	Minimum tensile strength	Weight	Connecting links
		p	b_1 min.	b_2 max.	b_3 min.	d_1 max.	d_2 max.	g max.	k max.	l_1 max.	f	F_B min.	q ≈	
No.	Ind.	mm	mm	mm	mm	mm	mm	mm	mm	mm	cm^2	kN	kg/m	No.
450 RF	10,11	8,0	3,00	4,77	4,90	5,00	2,31	7,1	3,1	8,6	0,11	4,0	0,18	4,7,11,122,15
331 RF	10,11	12,7	3,30	5,80	5,93	7,75	3,66	9,9	1,5	10,2	0,21	7,0	0,28	4,7,11,122,15
332 RF	10,11	12,7	4,88	7,20	7,33	7,75	3,66	9,9	1,5	11,2	0,28	7,0	0,33	4,7,11,122,15
462 RF		12,7	7,75	11,30	11,43	8,51	4,45	11,8	3,9	17,0	0,50	12,0	0,70	4,7,11,12,15
501 RF		15,875	9,65	13,28	13,41	10,16	5,08	14,7	4,1	19,6	0,67	14,5	0,91	4,7,11,12,15
513 RF		19,05	11,68	15,62	15,75	12,07	5,72	16,1	4,6	22,7	0,89	18,5	1,18	4,7,11,12,15
548 RF	11	25,4	17,02	25,40	25,60	15,88	8,28	21,0	5,4	36,1	2,10	40,0	2,50	4,7,111,12
35 RF	2,11	9,525	4,68	7,47	7,52	5,08	3,58	9,1	3,3	13,2	0,27	6,0	0,35	4,7,11
40 RF	10,11	12,7	7,85	11,15	11,28	7,95	3,96	12,0	3,9	17,8	0,44	10,5	0,61	4,7,11,122,15
60 RF	11	19,05	12,57	17,70	17,85	11,91	5,94	18,0	4,6	26,9	1,05	20,0	1,58	4,7,11,12
455 RFGL	10,11	9,525	5,72	8,53	8,66	6,35	3,28	8,2	3,3	13,5	0,28	7,0	0,41	4,7,11,122,15
455 RFKIGL	2,7,10	9,525	5,72	8,53	8,66	6,35	3,28	8,2	3,3	13,5	0,28	1,0	0,41	4,7,11,122,15
462 RFGL	2,7	12,7	7,75	11,30	11,43	8,51	4,45	11,5	3,9	17,0	0,50	12,0	0,78	4,7,11,12,15
501 RFGL		15,875	9,65	13,28	13,41	10,16	5,08	14,2	4,1	19,6	0,67	14,5	1,03	4,7,11,12,15
513 RFGL		19,05	11,68	15,62	15,75	12,07	5,72	15,5	4,6	22,7	0,89	18,5	1,29	4,7,11,12,15
548 RFGL	11	25,4	17,02	25,40	25,60	15,88	8,28	24,0	5,4	36,1	2,10	40,0	3,29	4,7,111,12
548 RFGLS	11	25,4	17,02	25,40	25,60	15,88	8,28	21,0	5,4	36,1	2,10	40,0	2,90	4,7,111,12

[2] without rollers (DIN 8154) [7] inner links made entirely of plastic, maintenance-free chain [10] connecting link No. 12 only with attached riveted bolts
[11] sprockets on request

Roller chains RF (stainless steel) - type series GL (straight plates) can also be supplied as multiplex roller chains.
For details on orders and enquiries see page 114. For sprockets RF (stainless steel) see page 69.

Connecting links: According to DIN (...)

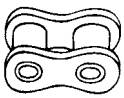

No. 4 (B)

Inner link

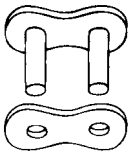

No. 7 (A)

Outer link
(to be riveted)

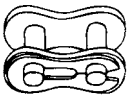

No. 11 (E)

Spring clip
connecting link

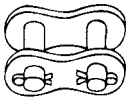

No. 111 (S)

Connecting link with
cottered pin

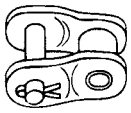

No. 12 (L)

Single
cranked link

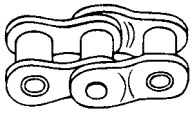

No. 15 (C)

Double
cranked link

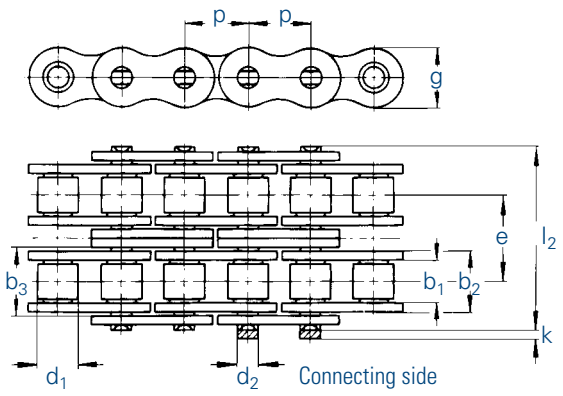

Chain		Pitch	Inner width	Inner link width	Outer plate width	Roller Ø	Pin Ø	Trans-verse pitch	Plate height	Projection over connec-ting link	Width over pin	Bearing area	Minimum tensile strength	Weight	Connecting links
		p	b_1 min.	b_2 max.	b_3 min.	d_1 max.	d_2 max.	e	g max.	k max.	l_2 max.	f	F_B min.	q ≈	
No.	Ind.	mm	mm	mm	mm	mm	mm	mm	mm	mm	mm	cm^2	kN	kg/m	No.
D450 RF		8,0	3,00	4,77	4,90	5,00	2,31	5,64	7,1	3,1	14,3	0,22	6,00	0,36	4,7,11,15
D455 RF	[1]	9,525	5,72	8,53	8,66	6,35	3,28	10,24	8,2	3,3	23,8	0,56	11,90	0,78	4,7,11,15
D462 RF		12,7	7,75	11,30	11,43	8,51	4,45	13,92	11,8	3,9	31,0	1,01	20,40	1,36	4,7,11,12,15
D501 RF		15,875	9,65	13,28	13,41	10,16	5,08	16,59	14,7	4,1	36,2	1,34	24,65	1,82	4,7,11,12,15
D513 RF		19,05	11,68	15,62	15,75	12,07	5,72	19,46	16,1	4,6	42,2	1,79	31,45	2,38	4,7,11,12,15
D548 RF		25,4	17,02	25,40	25,60	15,88	8,28	31,88	21,0	5,4	68,0	4,21	68,00	5,10	4,7,111,12
35-2 RF		9,525	4,68	7,47	7,52	5,08	3,58	10,13	9,0	3,3	23,4	0,53	12,00	0,70	11,12,15
40-2 RF		12,7	7,85	11,15	11,28	7,95	3,96	14,38	12,0	3,9	32,3	0,88	17,85	1,20	11,12,15
60-2 RF		19,05	12,57	17,70	17,85	11,91	5,94	22,78	18,0	4,6	49,8	2,10	34,00	3,14	4,7,11,12

[1] with straight side plates

For details on orders and enquiries see page 114.

Connecting links: According to DIN (...)

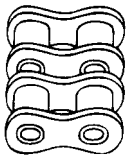

No. 4 (B)

Inner link

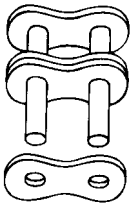

No. 7 (A)

Outer link
(to be riveted)

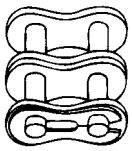

No. 11 (E)

Spring clip
connecting link

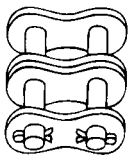

No. 111 (S)

Connecting link with
cottered pin

No. 12 (L)

Single
cranked link

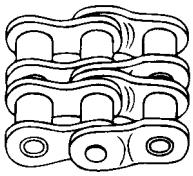

No. 15 (C)

Double
cranked link

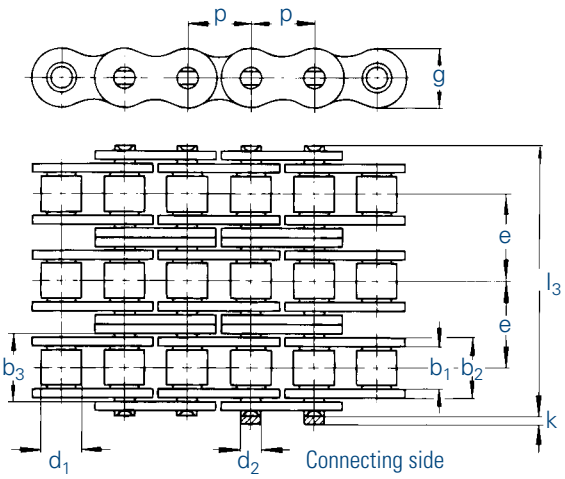

Chain		Pitch		Inner width	Inner link width	Outer plate width	Roller Ø	Pin Ø	Trans-verse pitch	Plate height	Projec-tion over connec-ting link	Width over pin	Bearing area	Minimum tensile strength	Weight	Connecting links
		p		b_1 min.	b_2 max.	b_3 min.	d_1 max.	d_2 max.	e	g max.	k max.	l_3 max.	f	F_B min.	q ≈	
No.	Ind.	mm	inch	mm	mm	mm	mm	mm	mm	mm	mm	mm	cm^2	kN	kg/m	No.
T 455 RF	[1]	9,525	⅜	5,72	8,53	8,66	6,35	3,28	10,24	8,2	3,3	34,0	0,81	18,9	1,18	11,12,15
T 462 RF		12,7	½	7,75	11,30	11,43	8,51	4,45	13,92	11,8	3,9	44,9	1,51	32,5	2,01	11,12,15
T 501 RF		15,875	⅝	9,65	13,28	13,41	10,16	5,08	16,59	14,7	4,1	52,8	2,02	39,0	2,70	11,12,15
T 513 RF		19,05	¾	11,68	15,62	15,75	12,07	5,72	19,46	16,1	4,6	61,7	2,68	49,5	3,12	11,12,15
T 548 RF		25,4	1	17,02	25,40	25,60	15,88	8,28	31,88	21,0	5,4	99,9	6,31	108,0	7,50	11,111,12

[1] with straight side plates

For details on orders and enquiries see page 114, Standard sprockets as of page 61.
Information on the selection of chain sizes and drives as of page 101.

Connecting links: According to DIN (...)

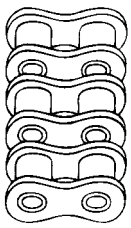

No. 4 (B)

Inner link

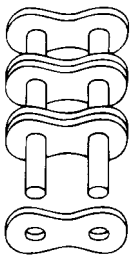

No. 7 (A)

Outer link
(to be riveted)

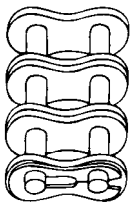

No. 11 (E)

Spring clip
connecting link

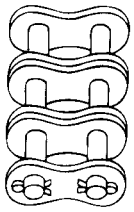

No. 111 (S)

Connecting link
with cottered pin

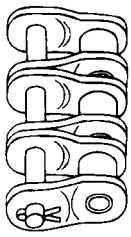

No. 12 (L)

Single
cranked link

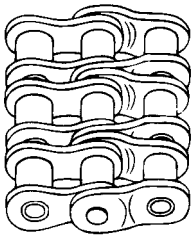

No. 15 (C)

Double
cranked link

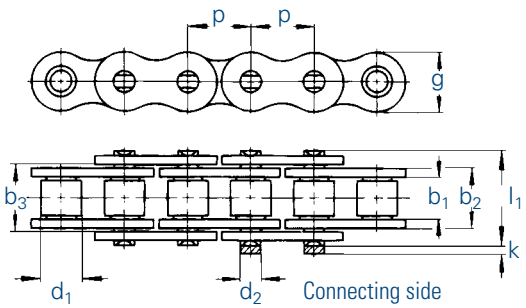

Chain		Pitch		Inner width	Inner link width	Outer plate width	Roller Ø	Pin Ø	Plate height	Projection over connecting link	Width over pin	Bearing area	Minimum tensile strength	Weight	Connecting links
		p		b_1 min.	b_2 max.	b_3 min.	d_1 max.	d_2 max.	g max.	k max.	l_1 max.	f	F_B min.	q ≈	
No.	Ind.	mm	inch	mm	mm	mm	mm	mm	mm	mm	mm	cm²	kN	kg/m	No.
455 TL		9,525	⅜	5,72	8,53	8,66	6,35	3,28	9,0	3,3	13,5	0,28	9,0	0,41	4,7,11,12,15
18		12,7	½	4,88	9,30	9,43	7,75	4,18	11,2	1,5	14,4	0,39	17,5	0,55	4,7,11,12,15
460		12,7	½	5,21	8,70	8,93	8,51	4,45	11,8	3,9	15,0	0,39	18,2	0,62	4,7,11,12,15
515		19,05	¾	13,50	19,70	19,83	12,07	5,72	16,2	4,6	28,6	1,12	35,0	1,67	4,7,11,12
517		19,05	¾	11,68	17,00	17,13	12,07	6,10	18,1	3,6	24,9	1,05	40,0	1,51	4,7,11,12
540		25,4	1	12,70	19,00	18,20	12,70	7,00	20,5	5,4	27,2	1,32	35,0	1,58	4,7,11,12
546 b		25,4	1	12,70	20,00	20,20	14,00	7,50	22,5	5,4	30,0	1,48	58,0	2,14	4,7,11,12
547		25,4	1	12,70	21,07	21,27	15,88	8,28	21,0	5,4	30,9	1,74	63,0	2,50	4,7,11,12,111
577		35,0	-	19,60	27,00	27,20	19,05	10,19	26,0	6,1	40,0	2,74	85,0	2,90	4,7,111,12
6144	[1]	41,5	-	20,70	26,90	27,28	15,90	9,05	26,3	5,0	38,1	2,40	56,0	2,59	4,7,111

[1] with straight side plates

For new installations we recommend to use only standardised roller chains according to DIN 8187 or 8188!
We reserve the right to cease production of this type series without prior notice!

For details on orders and enquiries see page 114. Sprockets on request.

Connecting links: According to DIN (...)

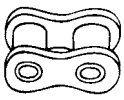

No. 4 (B)

Inner link

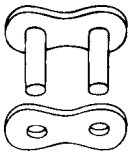

No. 7 (A)

Outer link
(to be riveted)

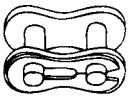

No. 11 (E)

Spring clip
connecting link

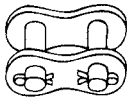

No. 111 (S)

Connecting link
with cottered pin

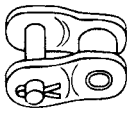

No. 12 (L)

Single
cranked link

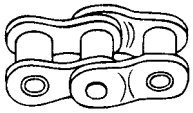

No. 15 (C)

Double
cranked link

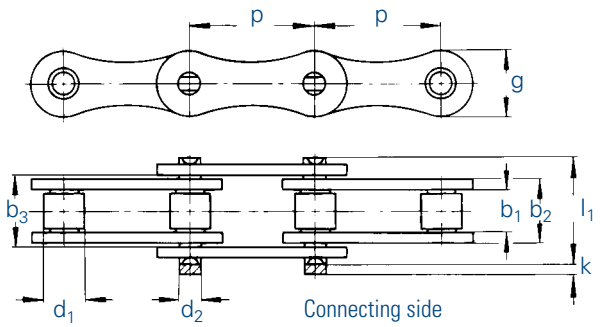

Chain		DIN	Pitch		Inner width	Inner link width	Outer plate width	Roller Ø	Pin Ø	Plate height	Projection over connecting link	Width over pin	Bearing area	Minimum tensile strength DIN	Weight
			p		b_1 min.	b_2 max.	b_3 min.	d_1 max.	d_2 max.	g max.	k max.	l_1 max.	f	F_B min.	q ≈
No.	Ind.	No.	mm	inch	mm	mm	mm	mm	mm	mm	mm	mm	cm^2	kN	kg/m
713		208 B	25,4	1	7,75	11,30	11,43	8,51	4,45	11,8	3,9	17,0	0,50	18,0	0,46
717		210 B	31,75	1 ¼	9,65	13,28	13,41	10,16	5,08	14,7	4,1	19,6	0,67	22,4	0,57
722		212 B	38,1	1 ½	11,68	15,62	15,75	12,07	5,72	16,1	4,6	22,7	0,89	29,0	0,75
728		216 B	50,8	2	17,02	25,40	25,60	15,88	8,28	21,0	5,4	36,1	2,10	60,0	1,74
734		220 B	63,5	2 ½	19,56	29,00	29,20	19,05	10,19	28,5	6,1	43,2	2,96	95,0	2,55

Electrogalvanised or nickel-plated chains on request. In this case chains may only have 80 % of the tensile strength.

Double pitch roller chains (stainless steel)

713 RF		208 B	25,4	1	7,75	11,30	11,43	8,51	4,45	11,8	3,9	17,0	0,50	12,0	0,48
717 RF		210 B	31,75	1 ¼	9,65	13,28	13,41	10,16	5,08	14,7	4,1	19,6	0,67	14,5	0,55
722 RF		212 B	38,1	1 ½	11,68	15,62	15,75	12,07	5,72	16,1	4,6	22,7	0,89	18,5	0,80
728 RF		216 B	50,8	2	17,02	25,40	25,60	15,88	8,28	21,0	5,4	36,1	2,10	40,0	1,74

For details on orders and enquiries see page 114. Sprockets on request.
Information on the selection of chain sizes and drives as of page 101.

Connecting links: According to DIN (...)

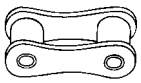

No. 4 (B)

Inner link

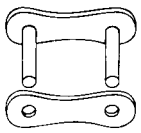

No. 7 (A)

Outer link
(to be riveted)

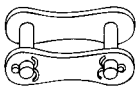

No. 111 (S)

Connecting link with cottered pin
for chain No. 713 with spring clip (E)

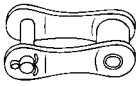

No. 12 (L)

Single
cranked link

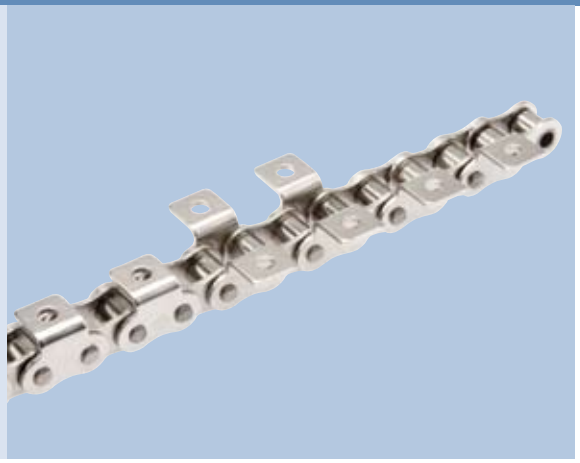

Type A
bent attachments, one side

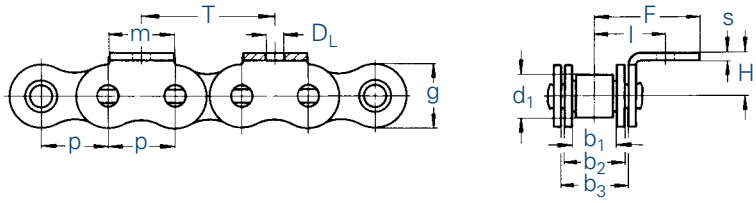

Type B
bent attachments, both sides

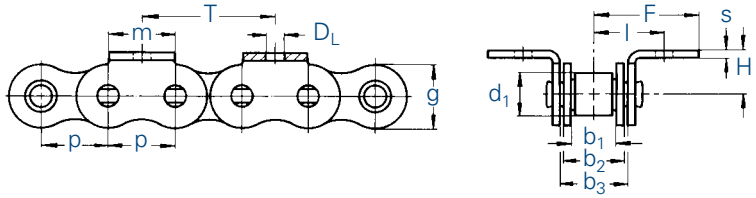

Type C
bent over chain attachments, one side

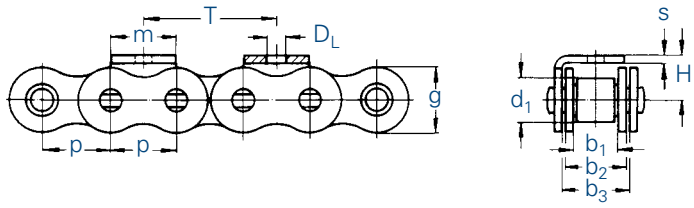

Basic chain		Pitch		Inner width	Inner link width	Outer plate width	Roller Ø	Plate height	Attachment dimensions					
		p		b_1 min.	b_2 max.	b_3 min.	d_1 max.	g max.	m	D_L	l	F	H	s
No.	Ind.	mm	inch	mm	mm	mm	mm	mm	mm	mm	mm	mm	mm	mm
450		8,0	-	3,00	4,77	4,90	5,00	7,1	8,0	3,2	6,6	12,0	5,0	0,80
455	1,15	9,525	⅜	5,72	8,53	8,66	6,35	8,2	8,0	3,5	9,5	13,5	6,5	1,25
331	17	12,7	½	3,30	5,80	5,93	7,75	9,9	10,5	3,5	9,0	15,1	7,0	0,95
332	17	12,7	½	4,88	7,20	7,33	7,75	9,9	10,5	3,5	9,7	15,8	7,0	0,95
462	15	12,7	½	7,75	11,30	11,43	8,51	11,8	12,5	4,5	13,1	19,0	10,0	1,50
501	15	15,875	⅝	9,65	13,28	13,41	10,16	14,7	15,0	5,5	16,7	27,0	10,0	1,70
513	15	19,05	¾	11,68	15,62	15,75	12,07	16,1	18,5	6,6	18,6	29,0	11,0	1,80
548	15,16	25,4	1	17,02	25,40	25,60	15,88	21,0	25,0	9,0	28,9	41,8	18,0	3,00
563		31,75	1 ¼	19,56	29,00	29,20	19,05	26,4	35,0	9,0	33,4	49,0	18,0	3,75
596		38,1	1 ½	25,40	37,90	38,20	25,40	33,4	38,0	11,0	44,0	64,0	25,0	5,00
613		44,45	1 ¾	30,99	46,50	46,80	27,94	37,0	45,0	14,0	54,1	78,0	32,0	6,00
652		50,8	2	30,99	45,50	45,80	29,21	42,2	50,0	14,0	54,0	76,3	35,0	6,00
40	15	12,7	½	7,85	11,15	11,28	7,95	12,0	10,5	3,5	12,7	17,9	7,9	1,50
50	15	15,875	⅝	9,40	13,80	13,93	10,16	15,0	12,7	5,2	15,9	23,9	10,3	2,00
60	15	19,05	¾	12,57	17,70	17,85	11,91	18,0	15,9	5,2	19,1	28,2	11,9	2,40
80	15	25,4	1	15,75	22,50	22,70	15,88	24,1	19,1	6,7	25,4	37,3	15,9	3,20

[1] with straight side plates [15] also with single hole bent attachments on inner link [16] on inner link s = 4 [17] can also be supplied with m = 16

All designs can also be supplied as Marathon roller chains (maintenance-free)!
For details on orders and enquiries see page 115. For untoleranced dimensions DIN ISO 2768 c applies.

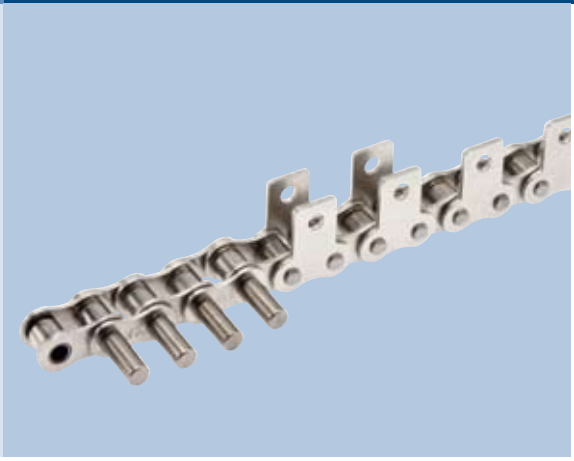

Type D

straight attachments, one side

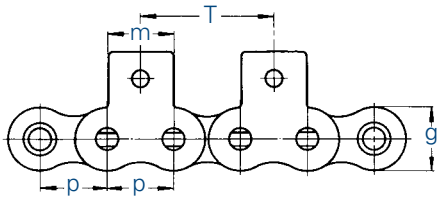

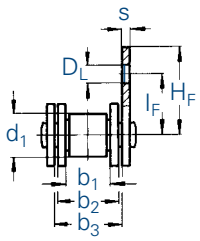

Type E

straight attachments, both sides

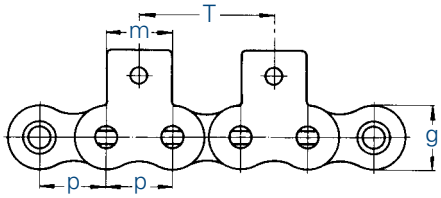

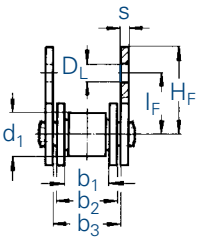

Type F

extended pins (available on alternate sides)

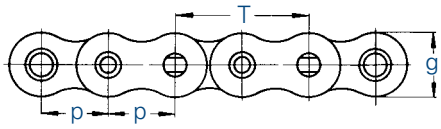

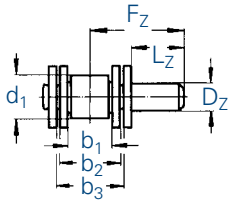

Basic chain		Pitch		Inner width	Inner link width	Outer plate width	Roller Ø	Plate height	Attachment dimensions							
		p		b_1 min.	b_2 max.	b_3 min.	d_1 max.	g max.	m	D_L	l_F	H_F	s	D_Z 7 h9	L_Z 7	F_Z 7
No.	Ind.	mm	inch	mm	mm	mm	mm	mm	mm	mm	mm	mm	mm	mm	mm	mm
450		8,0	-	3,00	4,77	4,90	5,00	7,1	8,0	3,2	7,5	13,00	0,80	4,0	10,0	13,3
455	1,18	9,525	⅜	5,72	8,53	8,66	6,35	8,2	8,0	3,5	9,0	13,80	1,25	5,0	15,0	20,7
331	17	12,7	½	3,30	5,80	5,93	7,75	9,9	10,5	3,5	11,5	17,65	0,95	5,0	15,0	19,0
332	17	12,7	½	4,88	7,20	7,33	7,75	9,9	10,5	3,5	11,5	17,65	0,95	5,0	15,0	19,7
462	18	12,7	½	7,75	11,30	11,43	8,51	11,8	12,5	4,5	14,7	20,30	1,50	6,0	15,0	22,4
501	18	15,875	⅝	9,65	13,28	13,41	10,16	14,7	15,0	5,5	17,2	26,70	1,70	6,5	20,0	28,5
513	18	19,05	¾	11,68	15,62	15,75	12,07	16,1	18,5	6,6	18,7	29,00	1,80	7,0	20,0	29,8
548	16,18	25,4	1	17,02	25,40	25,60	15,88	21,0	25,0	9,0	28,6	41,50	3,00	10,0	30,0	45,9
563		31,75	1 ¼	19,56	29,00	29,20	19,05	26,4	35,0	9,0	30,5	45,70	3,75	12,0	30,0	48,4
596		38,1	1 ½	25,40	37,90	38,20	25,40	33,4	38,0	11,0	41,0	60,00	5,00	16,0	35,0	59,1
613		44,45	1 ¾	30,99	46,50	46,80	27,94	37,0	45,0	14,0	52,5	75,50	6,00	20,0	40,0	69,0
652		50,8	2	30,99	45,50	45,80	29,21	42,2	50,0	14,0	53,5	77,00	6,00	20,0	40,0	69,0
40	18	12,7	½	7,85	11,15	11,28	7,95	12,0	10,5	3,5	11,5	17,65	1,50	5,0	15,0	22,2
50	18	15,875	⅝	9,40	13,80	13,93	10,16	15,0	12,7	5,2	15,9	23,50	2,00	5,08	11,9	21,1
60	18	19,05	¾	12,57	17,70	17,85	11,91	18,0	15,9	5,2	18,3	27,20	2,40	5,94	14,3	25,8
80	18	25,4	1	15,75	22,50	22,70	15,88	24,1	19,1	6,7	24,6	35,50	3,20	7,92	19,1	33,7

[1] with straight side plates [16] on inner link s = 4 [17] can also be supplied with m = 16 [18] also with straight attachments on inner link
[19] other dimensions available on request

All designs can also be supplied as Marathon roller chains (maintenance-free)!
For details on orders and enquiries see page 115. For untoleranced dimensions DIN ISO 2768 c applies.

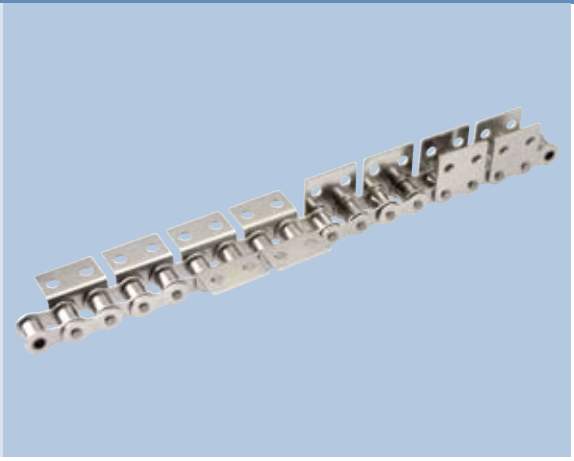

Type A2 bent attachments, one side

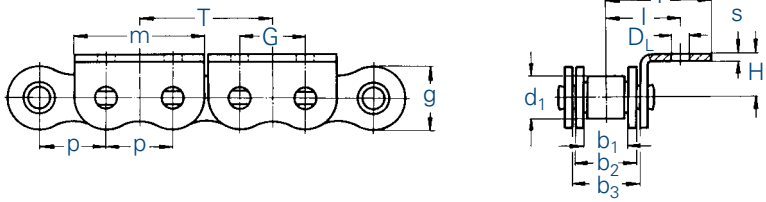

Type B2 bent attachments, both sides

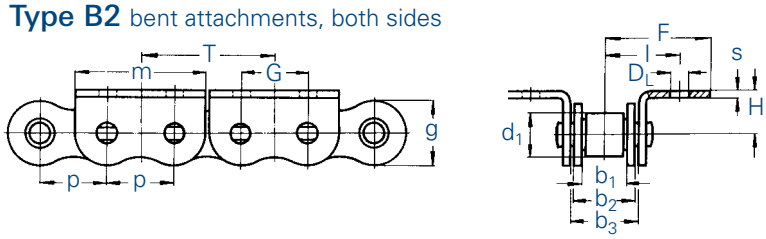

Type D2 straight attachments, one side

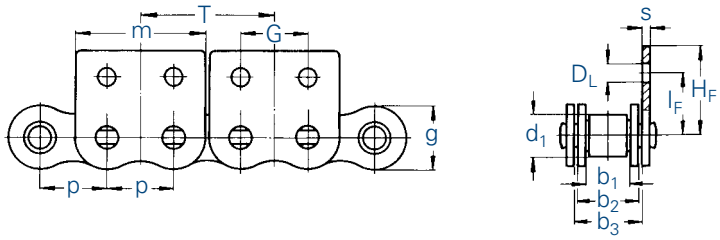

Type E2 straight attachments, both sides

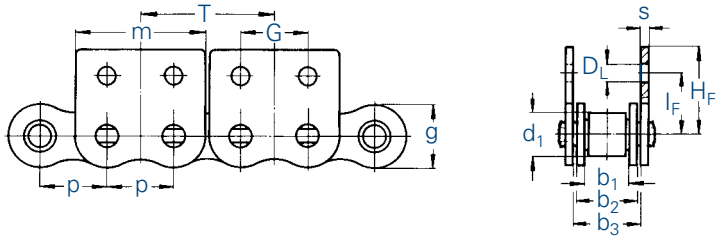

Basic chain		Pitch		Inner width	Inner link width	Outer plate width	Roller Ø	Plate height	Attachment dimensions								
		p		b_1 min.	b_2 max.	b_3 min.	d_1 max.	g max.	m	D_L	G	l	F	H	l_F	H_F	s
No.	Ind.	mm	inch	mm	mm	mm	mm	mm	mm	mm	mm	mm	mm	mm	mm	mm	mm
455	1,20	9,525	⅜	5,72	8,53	8,66	6,35	8,2	18,2	3,2	9,5	9,8	13,2	5,7	9,2	12,6	1,25
462		12,7	½	7,75	11,30	11,43	8,51	11,8	23,2	4,5	12,7	13,1	19,0	10,0	14,7	20,3	1,50
501		15,875	⅝	9,65	13,28	13,41	10,16	14,7	28,5	5,5	15,9	16,7	27,0	10,0	17,2	26,7	1,70
513		19,05	¾	11,68	15,62	15,75	12,07	16,1	33,6	6,6	19,1	18,6	29,0	11,0	18,7	29,0	1,80
548		25,4	1	17,02	25,40	25,60	15,88	21,0	46,5	9,0	25,4	28,9	42,0	18,0	28,6	41,5	3,00
563		31,75	1 ¼	19,56	29,00	29,20	19,05	26,4	55,8	9,0	31,8	33,4	49,0	18,0	30,5	46,0	3,75
596		38,1	1 ½	25,40	37,90	38,20	25,40	33,4	71,1	11,0	38,1	44,0	64,0	25,0	41,0	60,0	5,00

Roller chains (stainless steel) with two-hole bent and straight attachments

455 RF	1,20	9,525	⅜	5,72	8,53	8,66	6,35	8,2	18,2	3,2	9,5	9,8	13,2	5,7	9,2	12,6	1,25
462 RF		12,7	½	7,75	11,30	11,43	8,51	11,8	23,2	4,5	12,7	13,1	19,0	10,0	14,7	20,3	1,60
501 RF		15,875	⅝	9,65	13,28	13,41	10,16	14,7	28,5	5,5	15,9	16,7	27,0	10,0	17,2	26,7	1,70
513 RF		19,05	¾	11,68	15,62	15,75	12,07	16,1	33,6	6,6	19,1	18,5	29,0	11,0	18,7	29,0	1,80
548 RF		25,4	1	17,02	25,40	25,60	15,88	21,0	46,5	10,0	25,4	28,9	41,8	18,0	28,6	41,5	3,00

[1] with straight side plates [20] can be supplied with or without bore

All designs can also be supplied as Marathon roller chains (maintenance-free)! Sprockets made of stainless steel or plastic are available on request.
For details on orders and enquiries see page 115. For untoleranced dimensions DIN ISO 2768 c applies.

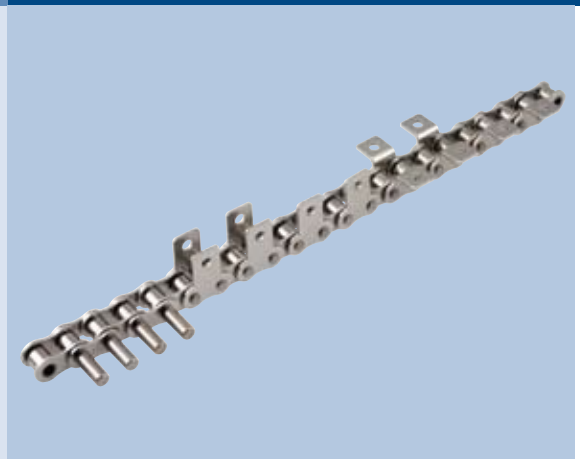

Type A bent attachments, one side

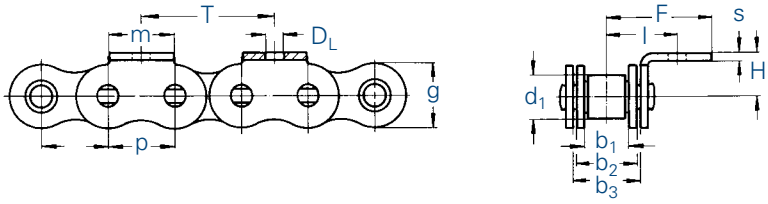

Type B bent attachments, both sides

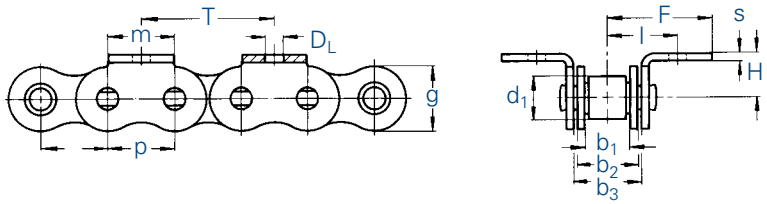

Type D straight attachments, one side

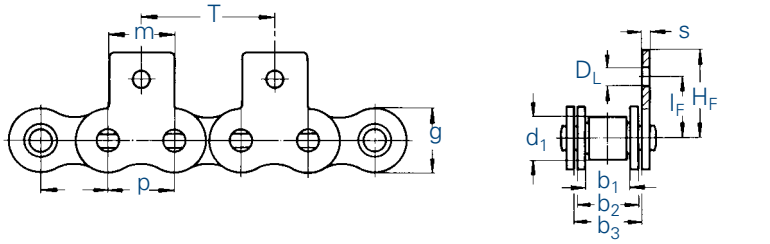

Type E straight attachments, both sides

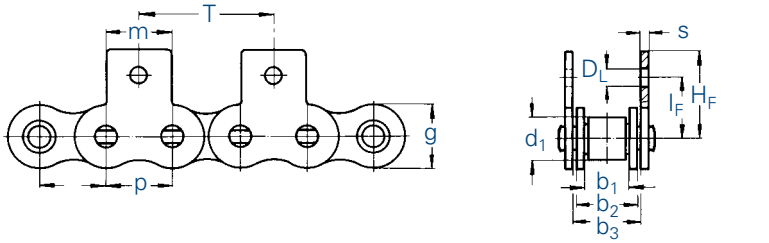

Type F extended pins
(available on alternate sides)

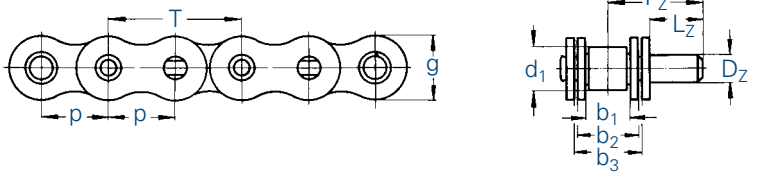

Basic chain		Pitch	Inner width	Inner link width	Outer plate width	Roller Ø	Plate height	Attachment dimensions										
		p	b_1 min.	b_2 max.	b_3 min.	d_1 max.	g max.	m	D_L	l	F	H	l_F	H_F	s	D_Z[19] h9	L_Z[19]	F_Z[19]
No.	Ind.	mm	mm	mm	mm	mm	mm	mm	mm	mm	mm	mm	mm	mm	mm	mm	mm	mm
450 RF		8,0	3,00	4,77	4,90	5,00	7,1	8,0	3,2	6,6	12,0	5,0	7,5	13,0	0,80	4,0	10	13,3
455 RF	1,21	9,525	5,72	8,53	8,66	6,35	8,2	8,0	3,5	9,5	13,5	6,5	9,0	13,4	1,25	5,0	15	20,7
331 RF	17	12,7	3,30	5,80	5,93	7,75	9,9	10,5	3,5	9,0	15,1	7,0	11,5	17,7	0,95	5,0	15	19,0
40 RF	21	12,7	7,85	11,15	11,28	7,95	12,0	10,5	3,5	11,8	17,9	7,9	11,5	17,7	1,50	5,0	15	22,2
332 RF	17	12,7	4,88	7,20	7,33	7,75	9,9	10,5	3,5	9,7	15,8	7,0	11,5	17,7	0,95	5,0	15	19,7
462 RF	21	12,7	7,75	11,30	11,43	8,51	11,8	12,5	4,5	13,1	19,0	10,0	14,7	20,3	1,60	6,0	15	22,4
501 RF	21	15,875	9,65	13,28	13,41	10,16	14,7	15,0	5,5	16,7	27,0	10,0	17,2	26,7	1,70	6,5	20	28,5
513 RF	21	19,05	11,68	15,62	15,75	12,07	16,1	18,5	6,6	18,5	29,0	11,0	18,7	29,0	1,80	7,0	20	29,8
548 RF	16,21	25,4	17,02	25,40	25,60	15,88	21,0	25,0	10,0	28,9	41,8	18,0	28,6	41,5	3,00	10,0	30	45,9

[1] with straight side plates [16] on inner link s = 4 [17] can also be supplied with m = 16 [19] other dimensions available on request
[21] also with single hole bent attachments on inner link

Sprockets made of stainless steel or plastic are available on request.
For details on orders and enquiries see page 115. For untoleranced dimensions DIN ISO 2768 c applies.

Type A G
bent attachments, one side

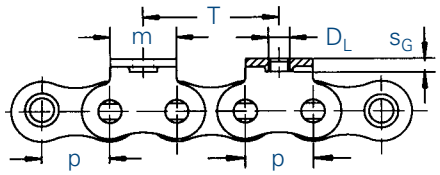

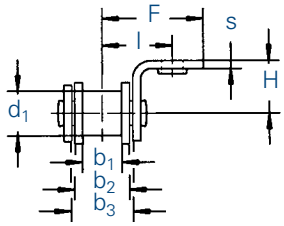

Type B G
bent attachments, both sides

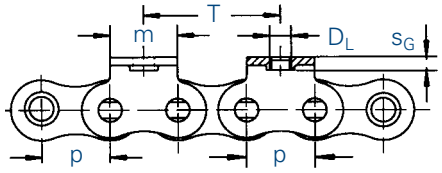

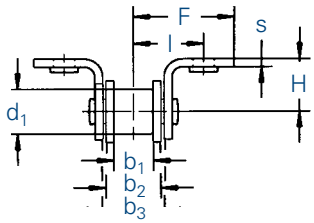

Type C G
bent over chain attachments, one side

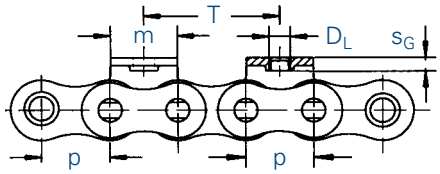

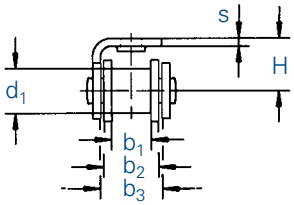

Type D G
straight attachments, one side

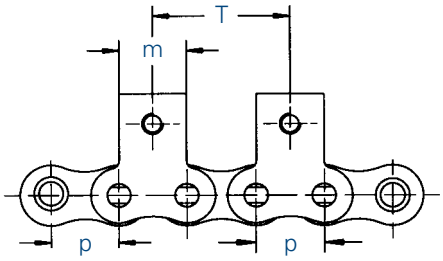

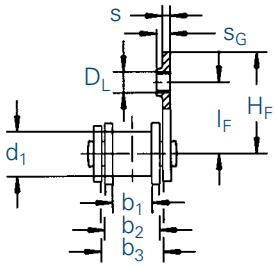

Type E G
straight attachments, both sides

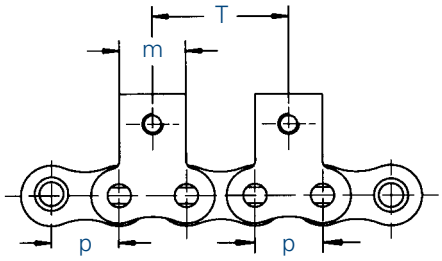

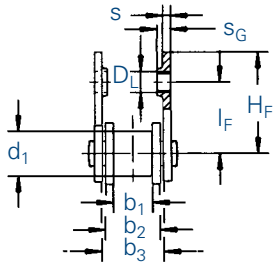

Basic chain		Pitch		Inner width	Inner link width	Outer plate width	Roller Ø	Plate height	Attachment dimensions						
		p		b_1 min.	b_2 max.	b_3 min.	d_1 max.	g max.	m	Inside thread	l	F	H	s	s_G
No.	Ind.	mm	inch	mm	mm	mm	mm	mm	mm		mm	mm	mm	mm	mm
462	22	12,7	½	7,75	11,30	11,43	8,51	11,8	12,5	M 4	13,1	19,0	10	1,50	4,00
501	22	15,875	⅝	9,65	13,28	13,41	10,16	14,7	15,0	M 5	16,7	27,0	10	1,70	4,20
513	22	19,05	¾	11,68	15,62	15,75	12,07	16,1	18,5	M 6	18,6	29,0	11	1,80	4,50
548	22	25,4	1	17,02	25,40	25,60	15,88	21,0	25,0	M 8	28,9	41,8	18	3,00	7,50

[22] can also be supplied in stainless steel

All designs can also be supplied as Marathon roller chains (maintenance-free)!
For details on orders and enquiries see page 115. For untoleranced dimensions DIN ISO 2768 c applies.

Type A 2 G
bent attachments, one side

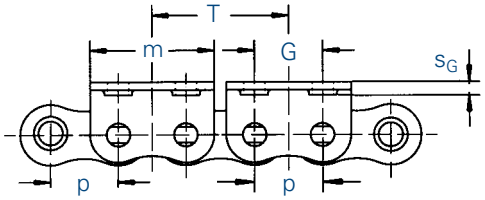

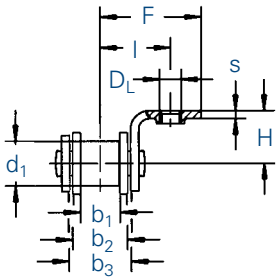

Type B 2 G
bent attachments, both sides

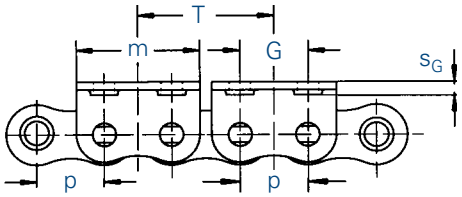

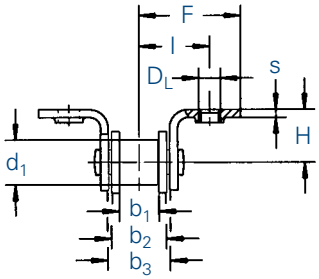

Type C 2 G
bent over chain attachments, one side

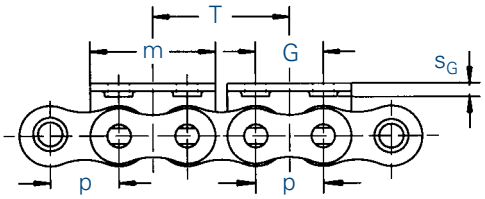

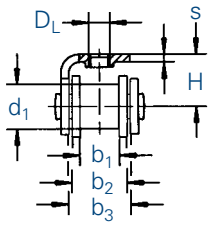

Type D 2 G
straight attachments, one side

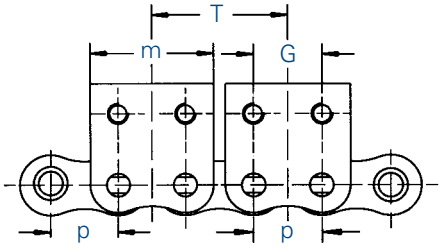

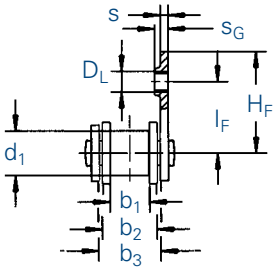

Type E 2 G
straight attachments, both sides

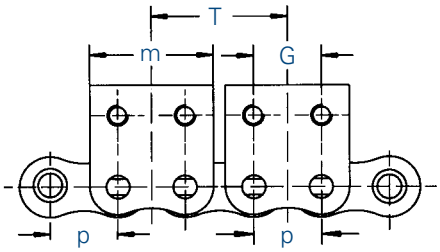

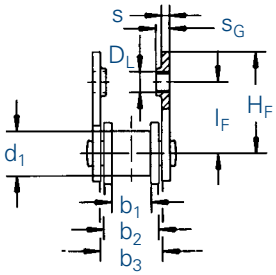

Basic chain		Pitch	Inner width	Inner link width	Outer plate width	Roller Ø	Plate height	Attachment dimensions									
		p	b_1 min.	b_2 max.	b_3 min.	d_1 max.	g max.	m	Inside thread D_L	G	l	F	H	l_F	H_F	s	s_G
No.	Ind.	mm	mm	mm	mm	mm	mm	mm		mm	mm	mm	mm	mm	mm	mm	mm
462	22	12,7	7,75	11,30	11,43	8,51	11,8	23,2	M 4	12,7	13,1	19,0	10	14,7	20,3	1,50	4,00
501	22	15,875	9,65	13,28	13,41	10,16	14,7	28,5	M 5	15,9	16,7	27,0	10	17,2	26,7	1,70	4,20
513	22	19,05	11,68	15,62	15,75	12,07	16,1	33,6	M 6	19,1	18,5	29,0	11	18,7	29,0	1,80	4,50
548	22	25,4	17,02	25,40	25,60	15,88	21,0	46,5	M 8	25,4	28,9	41,8	18	28,6	41,5	3,00	7,50

[22] can also be supplied in stainless steel

All designs can also be supplied as Marathon roller chains (maintenance-free)!
For details on orders and enquiries see page 115. For untoleranced dimensions DIN ISO 2768 c applies.

Type A
bent attachments, one side

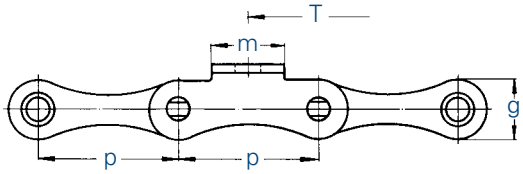

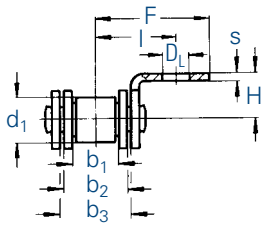

Type B
bent attachments, both sides

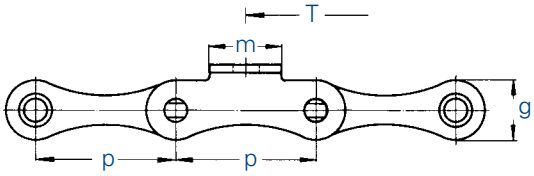

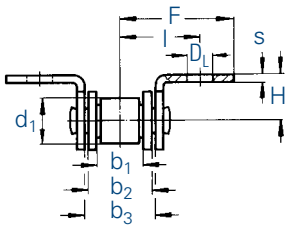

Type C
bent over chain attachments, one side

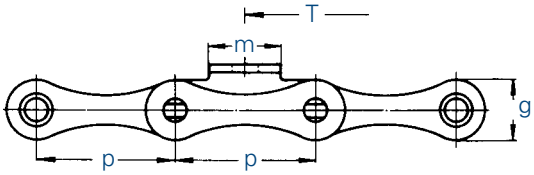

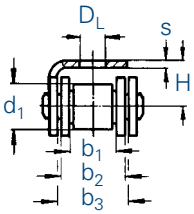

Basic chain		Pitch		Inner width	Inner link width	Outer plate width	Roller Ø	Plate height	Attachment dimensions					
		p		b_1 min.	b_2 max.	b_3 min.	d_1 max.	g max.	m	D_L	l	F	H	s
No.	Ind.	mm	inch	mm	mm	mm	mm	mm	mm	mm	mm	mm	mm	mm
713		25,4	1	7,75	11,30	11,43	8,51	11,8	13,0	4,5	13,1	19,3	10,0	1,60
717		31,75	1 ¼	9,65	13,28	13,41	10,16	14,7	15,0	5,5	16,7	26,7	10,0	1,70
722		38,1	1 ½	11,68	15,62	15,75	12,07	16,1	19,0	6,6	18,5	26,0	11,0	1,80
728		50,8	2	17,02	25,40	25,60	15,88	21,0	30,0	9,0	28,9	43,0	18,0	3,00
734		63,5	2 ½	19,56	29,00	29,20	19,05	28,5	35,0	9,0	33,1	49,6	18,0	3,75

Double pitch stainless steel roller chains with single hole bent attachments

713 RF		25,4	1	7,75	11,30	11,43	8,51	11,8	13,0	4,5	13,1	19,5	10,0	1,60
717 RF		31,75	1 ¼	9,65	13,28	13,41	10,16	14,7	15,0	5,5	16,7	26,7	10,0	1,70
722 RF		38,1	1 ½	11,68	15,62	15,75	12,07	16,1	19,0	6,6	18,5	26,0	11,0	1,80
728 RF		50,8	2	17,02	25,40	25,60	15,88	21,0	30,0	9,0	28,9	43,0	18,0	3,00

All designs can also be supplied as Marathon roller chains (maintenance-free)!
For details on orders and enquiries see page 115. For untoleranced dimensions DIN ISO 2768 c applies.

Type D
straight attachments, one side

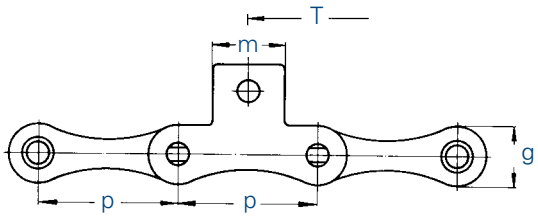

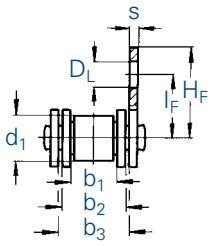

Type E
straight attachments, both sides

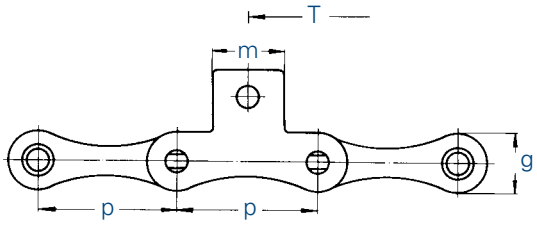

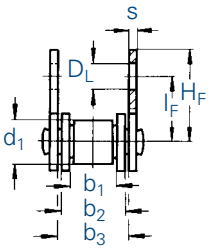

Type F
extended pin
(available on alternate sides)

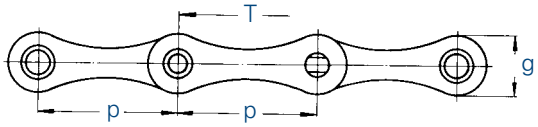

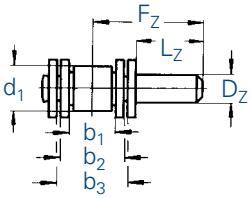

Basic chain		Pitch		Inner width	Inner link width	Outer plate width	Roller Ø	Plate height	Attachment dimensions							
		p		b_1 min.	b_2 max.	b_3 min.	d_1 max.	g max.	m	D_L	l_F	H_F	s	D_Z[19]	L_Z[19]	F_Z[19]
No.	Ind.	mm	inch	mm	mm	mm	mm	mm	mm	mm	mm	mm	mm	mm	mm	mm
713		25,4	1	7,75	11,30	11,43	8,51	11,8	13,0	4,5	14,7	20,3	1,60	6,0	15,0	22,4
717		31,75	1 ¼	9,65	13,28	13,41	10,16	14,7	15,0	5,5	17,0	26,7	1,70	6,5	20,0	28,5
722		38,1	1 ½	11,68	15,62	15,75	12,07	16,1	19,0	6,6	17,6	26,0	1,80	7,0	20,0	29,8
728		50,8	2	17,02	25,40	25,60	15,88	21,0	30,0	9,0	29,0	42,5	3,00	10,0	30,0	45,9
734		63,5	2 ½	19,56	29,00	29,20	19,05	28,5	35,0	9,0	30,5	45,7	3,75	12,0	30,0	48,4

Double pitch roller chains (stainless steel) with single hole straight attachments and extended pins

713 RF		25,4	1	7,75	11,30	11,43	8,51	11,8	13,0	4,5	14,7	20,3	1,60	6,0	15,0	22,4
717 RF		31,75	1 ¼	9,65	13,28	13,41	10,16	14,7	15,0	5,5	17,0	26,7	1,70	6,5	20,0	28,5
722 RF		38,1	1 ½	11,68	15,62	15,75	12,07	16,1	19,0	6,6	17,6	26,0	1,80	7,0	20,0	29,8
728 RF		50,8	2	17,02	25,40	25,60	15,88	21,0	30,0	9,0	29,0	42,5	3,00	10,0	30,0	45,9

[19] can also be supplied in stainless steel

Can also be supplied as Marathon roller chain (maintenance-free)!
For details on orders and enquiries see page 115. For untoleranced dimensions DIN ISO 2768 c applies.

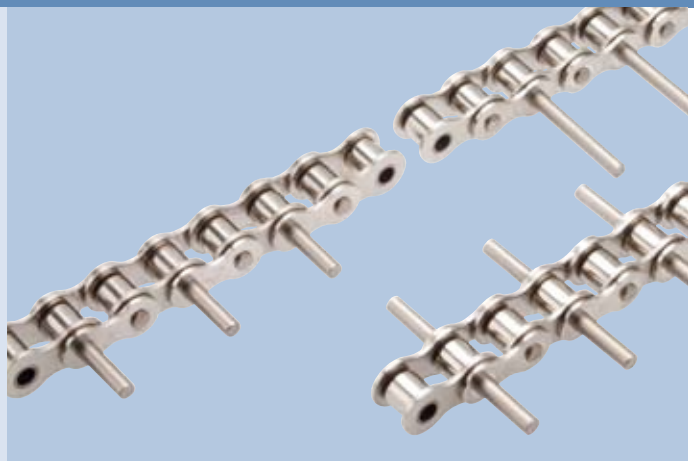

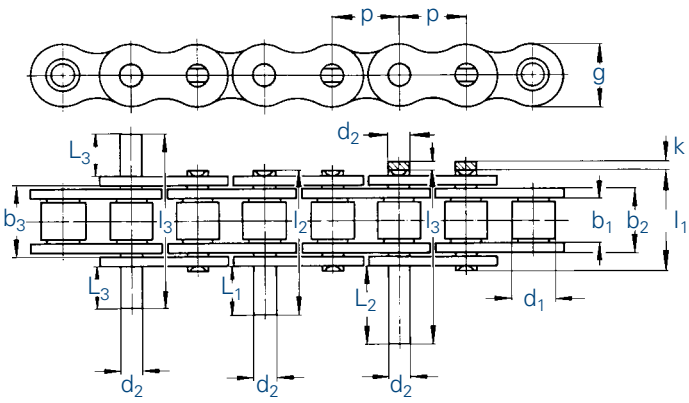

Basic chain		Pitch		Inner width	Inner link width	Outer plate width	Roller Ø	Pin Ø	Projection over connecting link	Plate height	Width over pin	Dimensions for extended pin				
												Overall length		Pin extension		
		p		b_1 min.	b_2 max.	b_3 min.	d_1 max.	d_2 max.	k max.	g max.	l_1 max.	l_2[11] max.	l_3[12] max.	L_1 max.	L_2 max.	L_3 max.
No.	Ind.	mm	inch	mm	mm	mm	mm	mm	mm	mm	mm	mm	mm	mm	mm	mm
445		6	-	2,80	4,10	4,20	4,00	1,85	2,9	5,0	7,4	12,7	-	6,6	-	-
450		8	-	3,00	4,77	4,90	5,00	2,31	3,1	7,1	8,6	14,3	19,9	6,3	12,2	6,35
455	1,10	9,525	⅜	5,72	8,53	8,66	6,35	3,28	3,3	8,2	13,5	23,1	33,7	11,0	21,6	11,15
462	10	12,7	½	7,75	11,30	11,43	8,51	4,45	3,9	11,8	17,0	30,7	44,9	15,3	29,5	15,3
501	10	15,875	⅝	9,65	13,28	13,41	10,16	5,08	4,1	14,7	19,6	36,2	52,8	18,2	34,8	18
513	10	19,05	¾	11,68	15,62	15,75	12,07	5,72	4,6	16,1	22,7	41,8	61,3	21,0	40,5	20,9
548	10	25,4	1	17,02	25,40	25,60	15,88	8,28	5,4	21,0	36,0	67,5	99,3	33,6	65,4	33,7
552	10	30	-	17,02	25,40	25,60	15,88	8,28	5,4	21,0	36,0	67,5	99,3	33,6	65,4	33,7
563		31,75	1 ¼	19,56	29,00	29,20	19,05	10,19	6,1	26,4	41,5	78,0	114,7	38,6	75,3	38,7
577		35	-	19,60	27,00	27,20	19,05	10,19	6,1	26,0	38,3	78,0	114,7	41,8	78,5	41,8
596		38,1	1 ½	25,40	37,90	38,20	25,40	14,63	6,6	33,4	53,0	101,3	149,5	50,5	98,7	50,5
613		44,45	1 ¾	30,99	46,50	46,80	27,94	15,90	7,4	37,0	63,6	122,9	182,9	62,0	122,0	62,3
652		50,8	2	30,99	45,50	45,80	29,21	17,81	7,9	42,2	63,6	121,7	180,5	60,8	119,6	61,1
35	10	9,525	⅜	4,68	7,47	7,52	5,08	3,59	3,3	9,1	13,2	22,0	32,5	11,0	21,5	11,1
40	10	12,7	½	7,85	11,15	11,28	7,95	3,96	3,9	12,0	17,8	30,1	45,2	14,8	29,9	15,35
50	10	15,875	⅝	9,40	13,80	13,93	10,16	5,08	4,1	15,0	20,5	38,7	56,8	19,4	37,5	19,4
60	10	19,05	¾	12,57	17,70	17,85	11,91	5,94	4,6	18,0	25,4	48,3	71,1	24,2	47,0	24,2
80		25,4	1	15,75	22,50	22,70	15,88	7,92	5,4	24,1	33,5	62,6	92,0	31,3	60,6	31,3
100		31,75	1 ¼	18,90	27,40	27,60	19,05	9,53	6,1	30,1	40,4	76,3	112,2	38,2	74,1	38,2
120		38,1	1 ½	25,22	35,30	35,60	22,23	11,10	6,6	36,2	50,3	96,1	141,9	48,2	94,0	48,2

[1] with straight side plates [10] can also be supplied in stainless steel [11] Duplex pin [12] Triplex pin

All designs can also be supplied as Marathon roller chains (maintenance-free)!
For details on orders and enquiries see page 115. For untoleranced dimensions DIN ISO 2768 c applies.

Simplex chain
with duplex connecting link

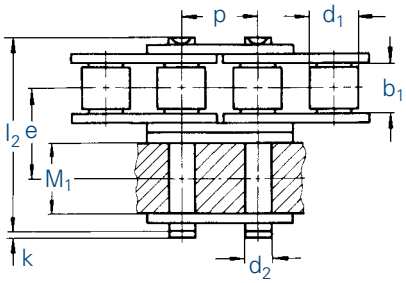

Simplex chain
with triplex connecting link

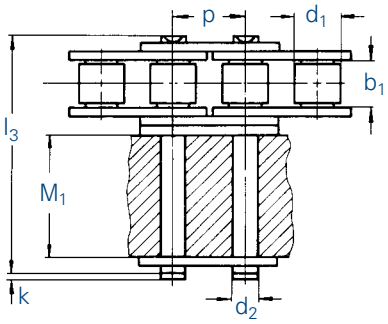

Simplex chain
with duplex connecting link

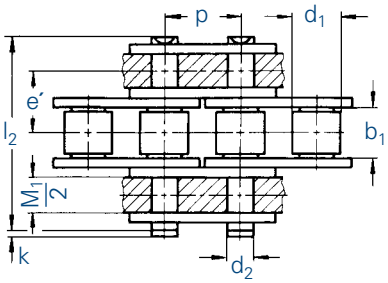

Duplex chain
with triplex connecting link

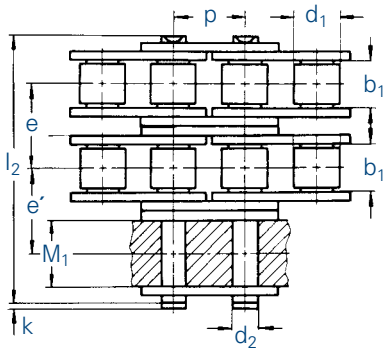

Duplex chain
with triplex connecting link

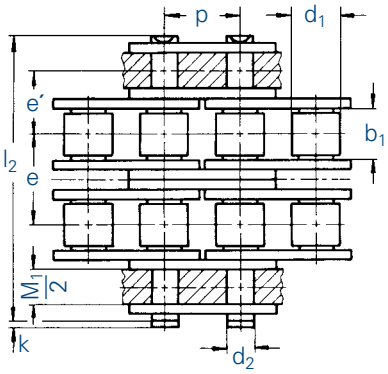

Chain		Pitch		Inner width	Roller Ø	Pin Ø	Transverse pitch		Attachment width		Projection over connecting link	Pin length	
		p		b_1 min.	d_1 max.	d_2 max.	e	e′	M_1 max.	M_2 max.	k max.	l_2 max.	l_3 max.
No.	Ind.	mm	inch	mm	mm	mm	mm	mm	mm	mm	mm	mm	mm
455	10	9,525	⅜	5,72	6,35	3,28	10,24	7,24	8,5	-	3,3	23,8	-
D 455	10	9,525	⅜	5,72	6,35	3,28	10,24	7,24	8,5	-	3,3	-	34,0
462	10	12,7	½	7,75	8,51	4,45	13,92	10,10	11,3	25,6	3,9	31,0	-
D 462	10	12,7	½	7,75	8,51	4,45	13,92	10,10	11,3	-	3,9	-	44,9
501	10	15,875	⅝	9,65	10,16	5,08	16,59	11,62	13,3	30,0	4,1	36,2	-
D 501	10	15,875	⅝	9,65	10,16	5,08	16,59	11,62	13,3	-	4,1	-	52,8
513	10	19,05	¾	11,68	12,07	5,72	19,46	13,63	15,6	34,8	4,6	42,2	-
D 513	10	19,05	¾	11,68	12,07	5,72	19,46	13,63	15,6	-	4,6	-	61,7
548	10	25,4	1	17,02	15,88	8,28	31,88	22,30	25,4	56,8	5,4	68,0	-
D 548	10	25,4	1	17,02	15,88	8,28	31,88	22,30	25,4	-	5,4	-	99,9

[10] can also be supplied in stainless steel

All designs can also be supplied as Marathon roller chains (maintenance-free)!
For details on orders and enquiries see page 115. For untoleranced dimensions DIN ISO 2768 c applies.

www.bergab.ru Берг АБ bergab@ya.ru Тел. (495)-228-06-21, факс (495) 223-3071

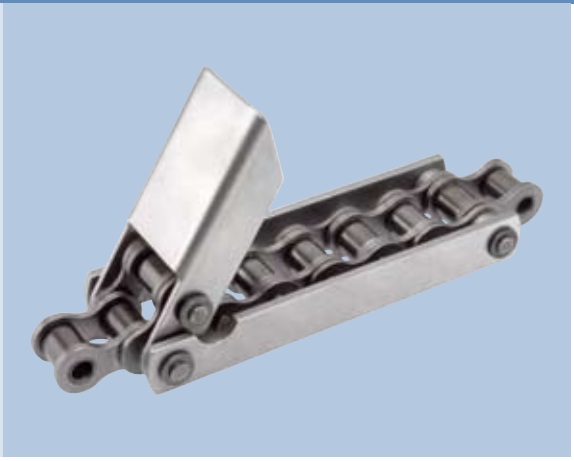

During conveyance the WIPPERMANN pusher is at right angles to the chain. In the deflection phase it submerges under the transported material without damaging it.

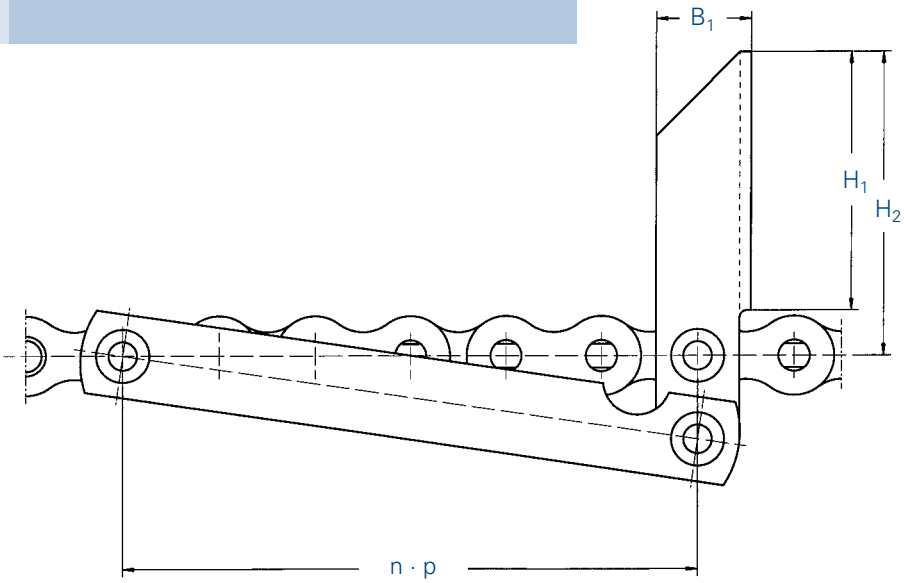

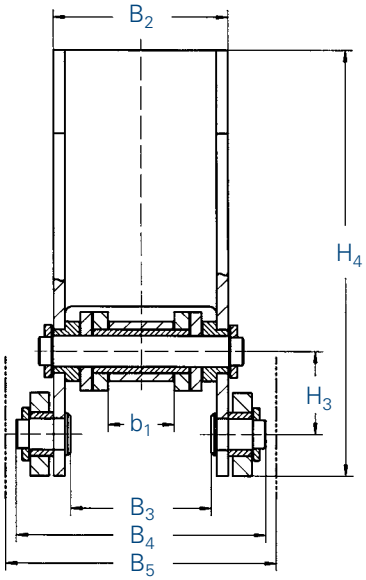

recommended duct width

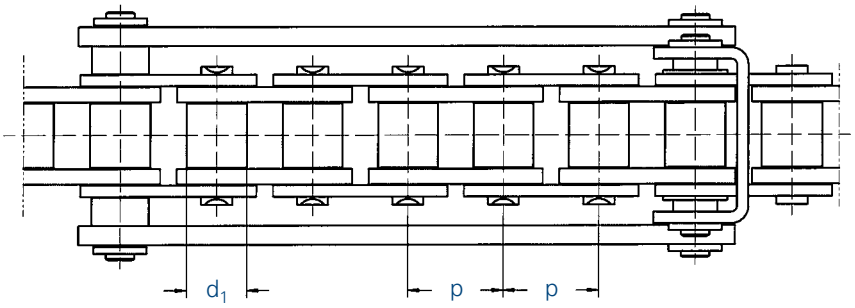

Chain		Sprockets		Pitch	Inner width	Roller Ø	Pusher dog dimensions										Thrust
		Number of teeth	Hub Ø max.	p	b_1 min.	d_1 max.	B_1	B_2	B_3	B_4	B_5	H_1	H_2	H_3	H_4	n	max.
No.	Ind.		mm	mm	mm	mm	mm	mm	mm	mm	mm	mm	mm	mm	mm	mm	kN
462 / M 120	10	20	32	32	7,75	8,51	18,0	25,0	19,0	35,0	40,0	22,0	29,0	11,0	46,0	5,0	0,5
501 / M 132	10	32	80	80	9,65	10,16	18,0	31,0	23,0	40,0	45,0	50,0	60,0	18,0	86,0	8,0	1,0
501 / M 133	10	24	60	60	9,65	10,16	18,0	31,0	23,0	40,0	45,0	50,0	60,0	14,0	82,0	6,0	1,0
548 / M 132	10	24	90	90	17,02	15,88	25,0	46,0	37,0	65,0	70,0	68,0	80,0	22,0	113,0	6,0	3,0

[10] can also be supplied in stainless steel

All designs can also be supplied as Marathon roller chains (maintenance-free)!
For details on orders and enquiries see page 115. For untoleranced dimensions DIN ISO 2768 c applies.

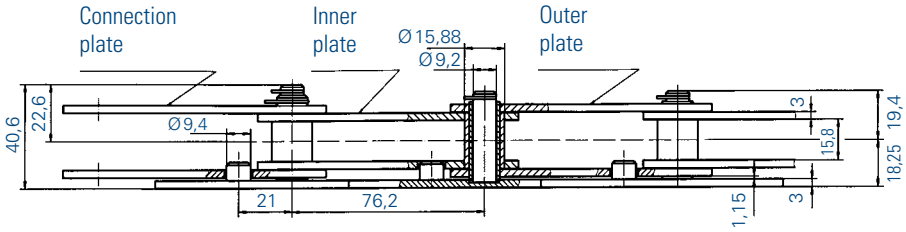

2 DH-I

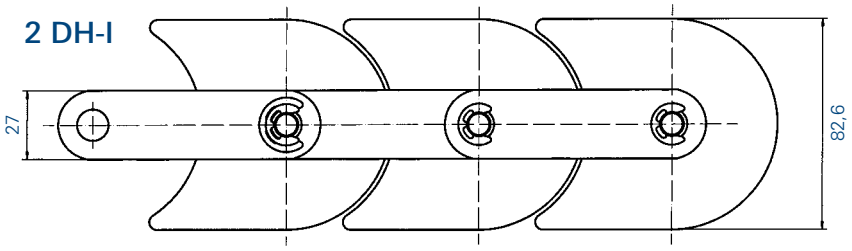

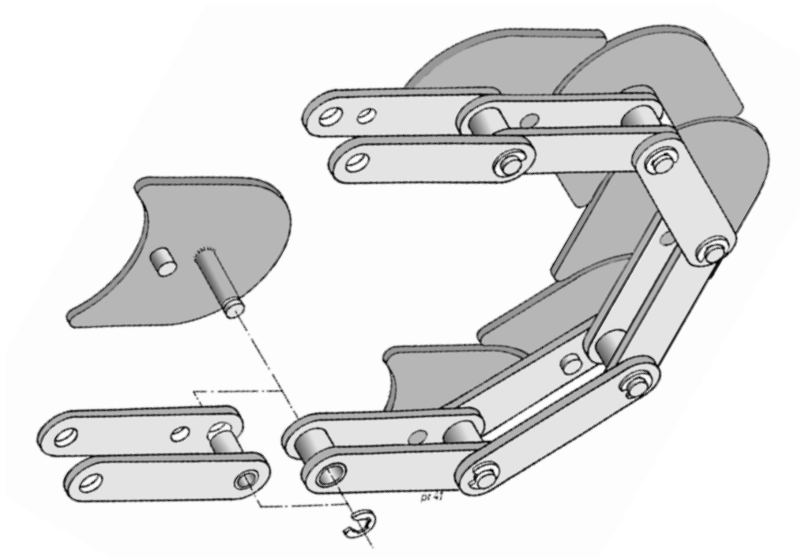

Chain	Weight	Minimum tensile strength
No.	kg/m	kN
2 DH-I	3,4	55,0

The main advantage compared to previous solutions is that the top plates are no component parts of the inner and outer links of the actual chain.

The plates are attached in the hollow pin as a separate assembly part. This specific DBGM protected construction characteristic (DBGM 295 05 477.8) allows for the top plates to be replaced even with a tensioned chain, i.e. the chain does not have to be separated.

Due to an additional short pin attached to the top plate the plate is twist-secured. The floating assembly of the top plate can compensate minor height differences of the slideways.

- Apart from that we have succeeded in considerably reducing the distance between the plates compared to previous solutions.
- The sickle-shaped conveyor plates allow unrestricted motion through narrow bends and curves.
- Owing to the special construction of the WIPPERMANN special top plate conveyor chain an identical run of the top plate and the basic chain is guaranteed.
- In order to facilitate assembly and disassembly, the top plates were mounted with circlips.
- The WIPPERMANN special top plate conveyor chain with its especially narrow chain plate construction ensures a larger bearing area of the top plates on the guide profiles.
- The top plates are coated and therefore have a high wear protection.
- The WIPPERMANN special top plate conveyor chain is fully compatible with other systems.

Top plate conveyor chains suitable for following curved paths are installed in particular for long conveyor distances and high loads.

Primarily, they are required by the beverage and food industry and by subcontractors to the automotive industry.

Sprockets on request.

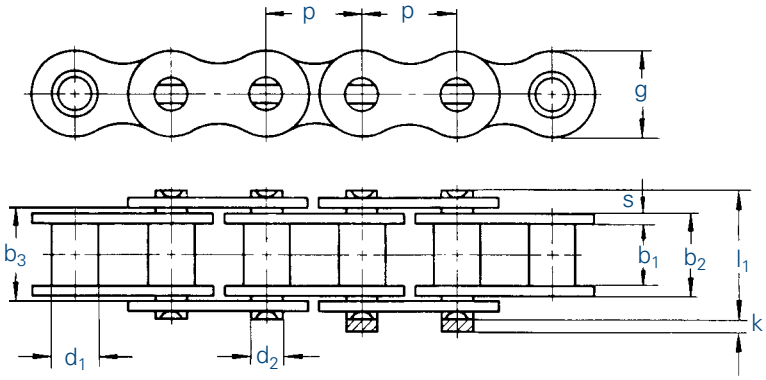

Chain speeds with bush chains up to a pitch : of 20 mm ... up to 5 m/s
of 40 mm ... up to 4 m/s
more than 40 mm ... up to 3 m/s

Chain		Pitch	Inner width	Inner link width	Outer plate width	Bushing Ø	Pin Ø	Width over pin	Projection over connecting link	Plate thickness	Plate height	Bearing area	Minimum tensile strength DIN	Weight	Connecting links
		p	b_1 min.	b_2 max.	b_3 min.	d_1 max.	d_2 max.	l_1 max.	k	s	g max.	f	F_B min.	q ≈	
No.	Ind.	mm	mm	mm	mm	mm	mm	mm	mm	mm	mm	cm^2	kN	kg/m	No.
200	[26]	15,0	14,0	18,50	19,00	9,0	6,0	26,0	2,0	2,00	14,0	1,1	12,5	1,25	4,7,111,12
203	[26]	20,0	16,0	22,50	23,00	12,0	8,0	33,0	3,0	3,00	19,0	1,8	25,0	2,10	4,7,11,111,12
206	[26]	25,0	18,0	24,50	25,00	15,0	10,0	37,0	3,5	3,00	24,0	2,5	31,5	2,60	4,7,111,12
209	[26]	30,0	20,0	28,50	29,00	17,0	11,0	43,0	3,5	4,00	28,0	3,1	40,0	4,00	4,7,111,12
212	[26]	35,0	22,0	30,50	31,00	18,0	12,0	46,0	4,5	4,00	30,0	3,7	50,0	4,30	4,7,111,12
215	[26]	40,0	25,0	35,50	36,00	20,0	14,0	53,0	4,5	5,00	35,0	5,0	63,0	6,00	4,7,111,12
218	[26]	45,0	30,0	42,50	43,00	22,0	16,0	63,0	4,5	6,00	40,0	6,8	80,0	8,00	4,7,111,12

[26] Connecting link No. 111 (S) with double cottered pin, i.e. projection k on both chain sides

For details on orders and enquiries see page 115. Sprockets on request.

Connecting links: According to DIN (...)

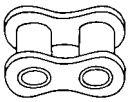

No. 4 (B)

Inner link

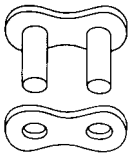

No. 7 (A)

Outer link
(to be riveted)

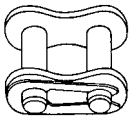

No. 11 (E)

Spring clip
connecting link

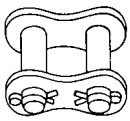

No. 111 (S)

Connecting link
with cottered pin

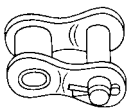

No. 12 (L)

Single
cranked link

Design E

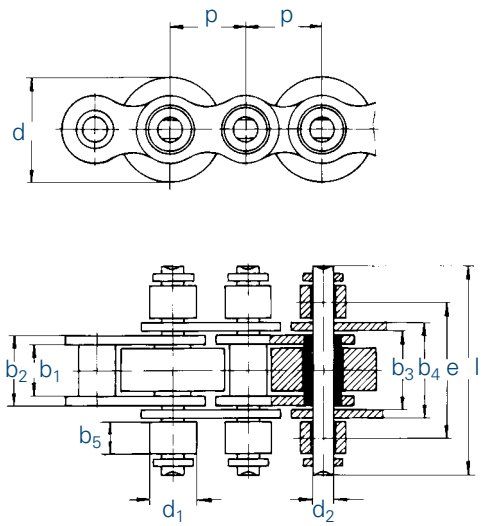

Double pitch roller chain Design L

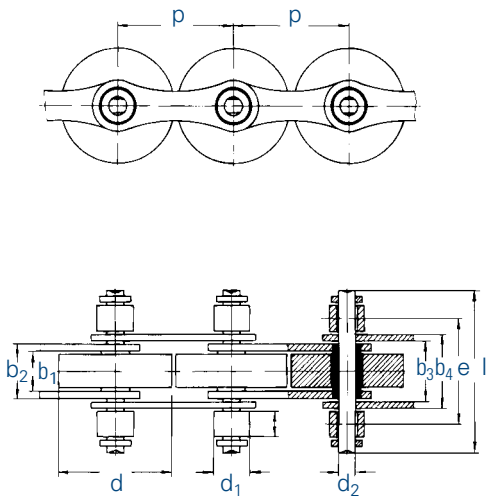

Chain		Pitch		Inner width	Inner link width	Width between outer plates		Support roller Ø	Pin Ø	Transverse pitch	Plate height	Width over pin	Support roller width	Width over pin type l	Support roller width
		p	Design	b_1 min.	b_2 max.	b_3 min.	b_4 max.	d_1	d_2 max.	e	g max.	l max.	b_5 max.	l max.	b_5 max.
No.	Ind.	mm		mm	mm	mm	mm	mm	mm	mm	mm	mm	mm	mm	mm
513 SF		19,05	E	11,68	15,62	15,80	20,0	12,00	5,72	31,50	16,1	48,0	11,5	43,0	9,0
548 SF		25,4	E	17,02	25,45	25,81	32,0	15,88	8,28	44,50	21,0	65,0	12,5	-	-
722 SF		38,1	L	11,68	15,62	15,80	20,0	12,00	5,72	31,50	16,1	48,0	11,5	-	-
728 SF		50,8	L	17,02	25,45	25,81	32,0	15,88	8,28	44,50	21,0	65,0	12,5	-	-
D 513 SF		19,05	D	11,68	15,62	15,80	20,0	12,07	5,72	52,00	16,1	68,0	11,5	-	-
D 548 SF		25,4	D	17,02	25,45	25,81	32,0	15,88	8,28	76,76	21,0	97,0	12,5	-	-
T 455 SF	[27]	9,525	T	5,72	8,53	-	-	6,35	3,28	20,48	8,2	34,0	-	-	-
T 513 SF		19,05	T	11,68	15,62	15,80	20,0	12,07	5,72	38,92	16,1	61,7	-	-	-
T 548 SF		25,4	T	17,02	25,45	25,81	32,0	15,88	8,28	63,76	21,0	99,9	-	-	-

Accumulator chains (stainless steel)

513 SF RF		19,05	E	11,68	15,62	15,80	20,0	12,00	5,72	31,50	16,1	48,0	11,5	43,0	9,0
548 SF RF		25,4	E	17,02	25,45	25,81	32,0	15,88	8,28	44,50	21,0	65,0	12,5	-	-
722 SF RF		38,1	L	11,68	15,62	15,80	20,0	12,00	5,72	31,50	16,1	48,0	11,5	-	-
728 SF RF		50,8	L	17,02	25,45	25,81	32,0	15,88	8,28	44,50	21,0	65,0	12,5	-	-
T 513 SF RF		19,05	T	11,68	15,62	-	-	12,07	5,72	38,92	16,1	61,7	-	-	-
T 548 SF RF		25,4	T	17,02	25,45	-	-	15,88	8,28	63,76	21,0	99,9	-	-	-

[27] Different from the drawing: No inner links in the middle strand! Roller width: 8,5 mm.

Sprockets are available for all accumulator chains!

Connecting links with securing circlips.
Our connecting links always have the same length l as the ordinary pins.

Temperature range: - 30 to 100°C for steel conveyor rollers
- 10 to 60°C for plastic conveyor rollers

Design D

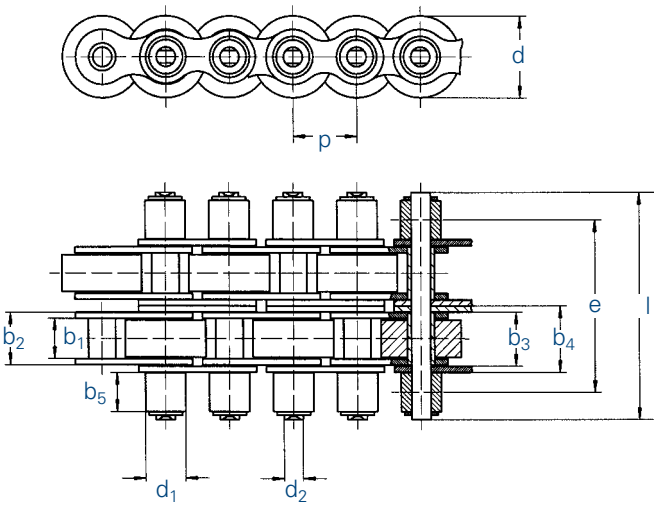

Design T

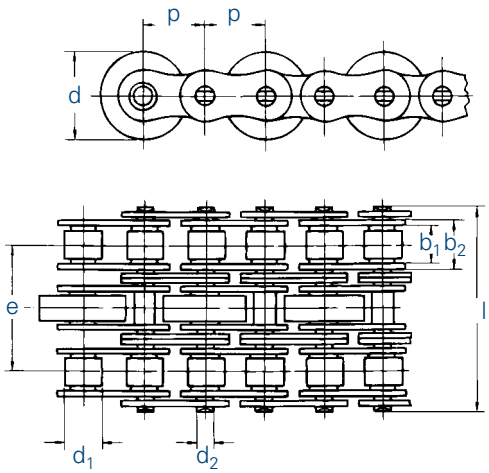

Width over pin type II	Support roller roller	Conveyor rollers						Minimum tensile strength	Maximum load per m conveyor chain with 10 m conveyor length	
		Designation for material			Diameter					
						type I	type II			
l	b_5	Steel	PA 6.6	Vestamide	d	d	d	F_B	Steel	Plastic
max.	max.							min.		
mm.	mm				mm	mm	mm	kN	kg	kg
40,0	7,5	SF	SFK	SFV	24,0	26,0	28,0	29,00	300	260
-	-	SF	SFK	SFV	38,5	-	-	60,00	600	500
-	-	SF	SFK	SFV	24,0	26,0	28,0	29,00	300	260
-	-	SF	SFK	SFV	38,5	40,0	50,0	60,00	600	500
-	-	SF	SFK	SFV	24,0	26,0	28,0	57,80	600	520
-	-	SF	SFK	SFV	38,5	-	-	120,00	1200	1000
-	-	SF	SFK	SFV	9,2	15,0	-	16,80	100	100
-	-	SF	SFK	SFV	24,0	26,0	28,0	60,00	600	260
-	-	SF	SFK	SFV	38,5	-	-	120,00	1200	500

Accumulator chains (stainless steel)

40,0	7,5	SF RF	SFK RF	SFV RF	24,0	26,0	28,0	18,50	200	200
-	-	SF RF	SFK RF	SFV RF	38,5	-	-	40,00	300	300
-	-	SF RF	SFK RF	SFV RF	24,0	26,0	28,0	18,50	200	200
-	-	SF RF	SFK RF	SFV RF	38,5	40,0	50,0	40,00	300	300
-	-	SF RF	SFK RF	SFV RF	24,0	26,0	28,0	31,45	400	400
-	-	SF RF	SFK RF	SFV RF	38,5	-	-	68,00	600	600

The load per m applies for 10 m conveyor distance per double chain strand. The load may be proportionally increased for shorter chain strands and must be proportionally decreased for longer conveyor distances: e.g. 5 m conveyor distance = double load, 20 m conveyor distance = half load.

Maximum conveyor distances 25 - 30 m. The installation of guide plates is recommended as of 15 m (see page 50).

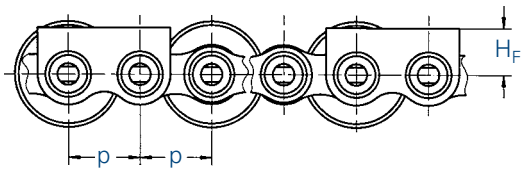

548 SF

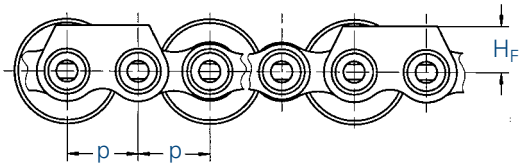

513 SF

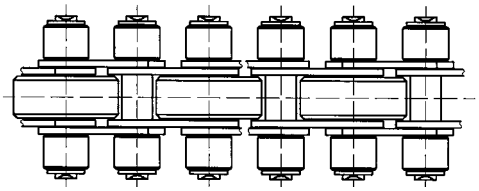

The guide plate distance is an even multiple of the pitch, e.g. T = 4 p

Chain	p	H_F	
No.	mm	mm	
513 SF	19,05	12,6	± 0,1
548 SF	25,40	18,0	± 0,1

Design with guide plates

AXIAL PROFILE OF SPROCKETS FOR ACCUMULATOR CHAINS

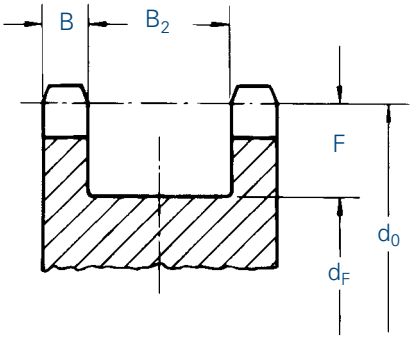

$$d_F = d_0 - 2\,F$$

$$F = \frac{d}{2} + 2$$

Chain	B	B_2	F
No.	mm	mm	mm
T 455	5,2	15,3	8,0
513 SF	10,6	20,8	16,0
D 513 SF	10,6	42,0	16,0
T 513 SF	10,8	28,2	16,0
548 SF	12,0	33,0	22,0
D 548 SF	12,0	66,0	22,0
T 548 SF	15,8	48,0	22,0
722 SF	10,6	20,8	16,0
728 SF	12,0	33,0	27,0

Sprockets are available for all accumulator chains.

CHAIN GUIDE FOR ACCUMULATOR CHAINS

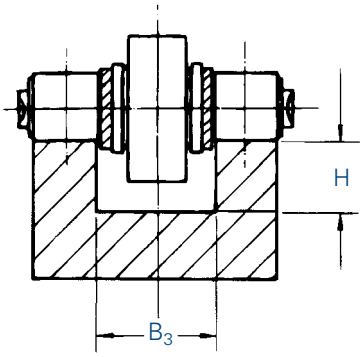

Chain	B_3	H
No.	mm	mm
513 SF	20,8	15,0
513 SFK	20,8	15,0
D 513 SF	40,5	15,0
548 SF	33,0	20,0
D 548 SF	66,0	20,0
722 SF	20,8	15,0
728 SF	33,0	27,0

Different designs, roller diameters and pin lengths are available on request

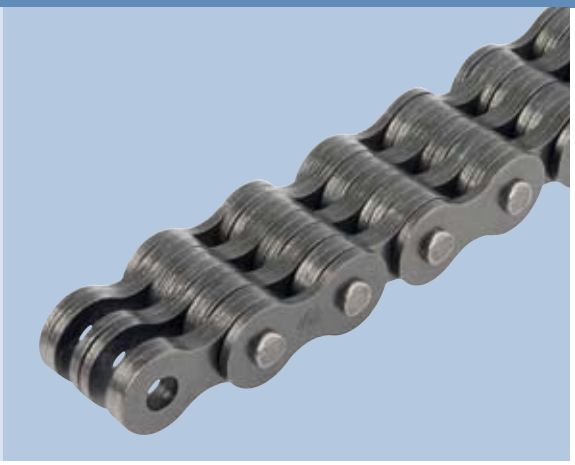

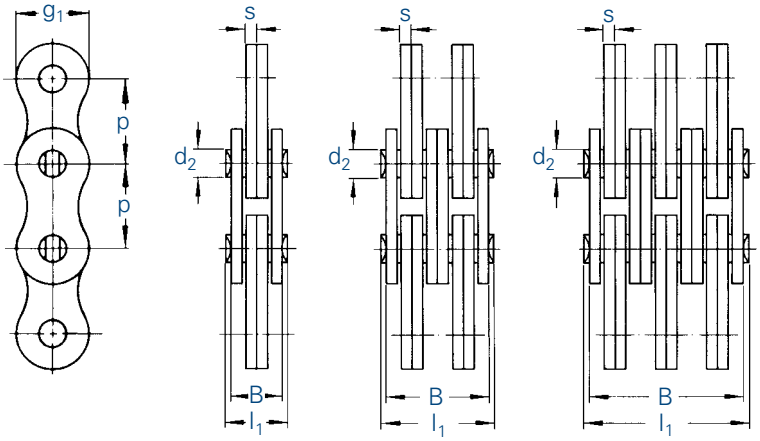

Abstract from DIN 8152

Chains may be assembled with chain parts according to DIN 8187. Therefore the actual pitch may deviate from the nominal pitch. The permissible length deviation refers to the length specification of the manufacturer and is ± 0,25 % under the measuring force.

Chain			Nominal pitch		Lacing	Width over		Pin	Plate		Effective length over 100 x pitch*	Bearing area	Minimum tensile strength DIN	Weight
						Pins	Plates	Ø	thickness	height				
		DIN	p			l_1 max.	B max.	d_2 max.	s	g_1 max.		f ≈	F_B min.	q ≈
No.	Ind.	No.	mm	inch		mm	mm	mm	mm	mm	mm	cm²	kN	kg/m
F 122		LL 0822	12,7	½	2 x 2	9,0	6,4	4,45	1,55	10,7	1260	0,138	18,0	0,39
F 124		LL 0844	12,7	½	4 x 4	15,2	12,8	4,45	1,55	10,7	1260	0,276	36,0	0,74
F 126		LL 0866	12,7	½	6 x 6	21,4	19,0	4,45	1,55	10,7	1260	0,414	54,0	1,10
F 152		LL 1022	15,875	⅝	2 x 2	10,0	7,2	5,08	1,65	12,6	1580	0,175	26,0	0,50
F 154		LL 1044	15,875	⅝	4 x 4	17,1	14,5	5,08	1,65	12,6	1580	0,349	50,0	0,96
F 156		LL 1066	15,875	⅝	6 x 6	24,1	21,5	5,08	1,65	12,6	1580	0,524	78,0	1,39
F 192		LL 1222	19,05	¾	2 x 2	10,7	7,8	5,72	1,83	14,7	1892	0,209	33,0	0,59
F 194		LL 1244	19,05	¾	4 x 4	18,1	15,2	5,72	1,83	14,7	1892	0,419	66,0	1,15
F 196		LL 1266	19,05	¾	6 x 6	25,4	22,6	5,72	1,83	14,7	1892	0,628	99,0	1,70
F 194 S		-	19,05	¾	4 x 4	21,0	18,6	5,98	2,25	14,7	1905	0,515	76,5	1,40
F 196 S		-	19,05	¾	6 x 6	31,5	27,8	5,98	2,25	14,7	1905	0,772	115,0	2,10
F 252		LL 1622	25,4	1	2 x 2	17,2	12,8	8,28	3,00	21,1	2532	0,500	70,0	1,56
F 254		LL 1644	25,4	1	4 x 4	29,3	25,6	8,28	3,00	21,1	2532	0,994	140,0	3,04
F 256		LL 1666	25,4	1	6 x 6	41,3	37,5	8,28	3,00	21,1	2532	1,490	210,0	4,53
F 312		LL 2022	31,75	1 ¼	2 x 2	20,3	16,0	10,19	3,75	25,4	3170	0,750	105,0	2,01
F 314		LL 2044	31,75	1 ¼	4 x 4	36,5	32,0	10,19	3,75	25,4	3170	1,500	210,0	3,93
F 316		LL 2066	31,75	1 ¼	6 x 6	51,5	48,0	10,19	3,75	25,4	3170	2,250	315,0	5,86
F 382		LL 2422	38,1	1 ½	2 x 2	26,5	21,0	14,63	5,00	33,4	3797	1,460	175,0	4,18
F 384		LL 2444	38,1	1 ½	4 x 4	46,5	42,0	14,63	5,00	33,4	3797	2,930	350,0	8,48
F 386		LL 2466	38,1	1 ½	6 x 6	67,5	62,0	14,63	5,00	33,4	3797	4,390	525,0	12,20
F 502		LL 3222	50,8	2	2 x 2	30,5	25,0	17,81	6,00	43,0	5070	2,140	265,0	6,73
F 504		LL 3244	50,8	2	4 x 4	54,5	50,0	17,81	6,00	43,0	5070	4,280	530,0	13,10
F 506		LL 3266	50,8	2	6 x 6	80,5	74,0	17,81	6,00	43,0	5070	6,420	800,0	19,50
F 508		LL 3288	50,8	2	8 x 8	105,5	99,0	17,81	6,00	43,0	5070	8,560	1050,0	25,80
F 501		LL 3110	50,8	2	10 x 10	130,0	123,0	17,81	6,00	43,0	5070	10,850	1330,0	31,56
F 632		LL 4022	63,5	2 ½	2 x 2	44,7	33,2	22,89	8,00	52,0	6335	3,525	422,0	10,51
F 634		LL 4044	63,5	2 ½	4 x 4	77,9	65,6	22,89	8,00	52,0	6335	7,050	845,0	20,29
F 636		LL 4066	63,5	2 ½	6 x 6	111,1	98,0	22,89	8,00	52,0	6335	10,575	1270,0	29,74
F 638		LL 4088	63,5	2 ½	8 x 8	136,0	130,4	22,89	8,00	52,0	6335	14,100	1690,0	39,30

* Chain length tolerance ± 0,25 % of unoiled chain under measuring force.

For ordering examples, end links and end pins see page 53.

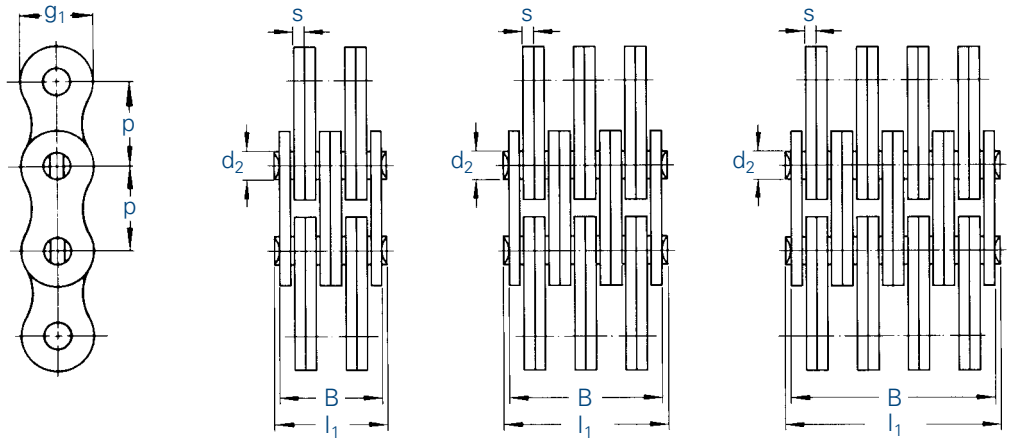

Chain		Nominal pitch		Lacing	Width over Pins	Width over Plates	Pin Ø	Plate thickness	Plate height	Effective length over 100 x pitch*	Bearing area	Minimum tensile strength	Weight
		p			l_1 max.	B max.	d_2 max.	s	g_1 max.		f ≈	F_B min.	q ≈
No.	Ind.	mm	inch		mm	mm	mm	mm	mm	mm	cm²	kN	kg/m
FU 154		15,875	⅝	4 x 4	17,1	14,5	5,08	1,65	14,4	1596	0,350	52,0	1,2
FU 156		15,875	⅝	6 x 6	24,1	21,5	5,08	1,65	14,4	1596	0,524	78,0	1,8
FU 158		15,875	⅝	8 x 8	30,9	28,0	5,08	1,65	14,4	1596	0,699	102,0	2,3
FU 156 S		15,875	⅝	6 x 6	27,5	25,0	5,08	2,05	14,7	1596	0,625	83,5	2,1
FU 194		19,05	¾	4 x 4	18,1	15,2	5,72	1,83	16,1	1907	0,419	66,0	1,4
FU 196		19,05	¾	6 x 6	25,4	22,6	5,72	1,83	16,1	1907	0,628	99,0	2,3
FU 196 S		19,05	¾	6 x 6	31,7	28,8	6,50	2,35	18,1	1907	0,917	130,0	2,9
FU 254		25,4	1	4 x 4	29,3	25,6	8,28	3,00	23,0	2550	0,994	140,0	3,5
FU 256		25,4	1	6 x 6	41,3	37,5	8,28	3,00	23,0	2550	1,490	210,0	5,0
FU 258		25,4	1	8 x 8	53,1	49,0	8,28	3,00	23,0	2550	1,987	280,0	6,8

* Chain length tolerance ± 0,25 % of unoiled chain under measuring force.

For ordering examples, end links and end pins see page 53. For information on the selection of chain sizes see pages 99 + 100.

LEAF CHAINS HEAVY DUTY DESIGN U TO WORKS-STANDARD

With chains of this type all plates are mounted with a sliding fit and are also secured with laterally attached riveted washers. This design guarantees an even load distribution and reduces the bending load of the pin. These chains have been designed to transport heavy loads under harsh conditions. They are particularly suitable for such applications due to their high fatigue strength.

Chain		Nominal pitch		Lacing	Width over Pins	Width over Plates	Pin Ø	Plate thickness	Plate height	Effective length over 100 x pitch*	Bearing area	Minimum tensile strength	Weight
		p			l_1 max.	B max.	d_2 max.	s	g_1 max.		f ≈	F_B min.	q ≈
No.	Ind.	mm	inch		mm	mm	mm	mm	mm	mm	cm²	kN	kg/m
F 384 U		38,1	1 ½	4 x 4	53,2	42,0	14,63	5,00	33,4	3802	2,926	354,0	9,1
F 386 U		38,1	1 ½	6 x 6	75,2	62,0	14,63	5,00	33,4	3802	4,389	540,0	12,5
F 388 U		38,1	1 ½	8 x 8	94,2	83,0	14,63	5,00	33,4	3802	5,852	700,0	16,5
F 504 U		50,8	2	4 x 4	60,2	50,0	17,81	6,00	43,0	5073	4,274	530,0	13,5
F 506 U		50,8	2	6 x 6	87,2	74,0	17,81	6,00	43,0	5073	6,412	800,0	20,0
F 508 U		50,8	2	8 x 8	111,2	99,0	17,81	6,00	43,0	5073	8,549	1050,0	26,5
F 501 U		50,8	2	10 x 10	135,0	123,0	17,81	6,00	43,0	5073	10,686	1330,0	33,1
F 634 U		63,5	2 ½	4 x 4	81,2	70,0	22,89	8,00	52,0	6340	5,494	845,0	19,4
F 636 U		63,5	2 ½	6 x 6	112,2	101,0	22,89	8,00	52,0	6340	10,990	1270,0	29,1
F 638 U		63,5	2 ½	8 x 8	146,0	135,0	22,89	8,00	52,0	6340	14,650	1690,0	38,8

* Chain length tolerance ± 0,25 % of unoiled chain under measuring force.

Inner end link
4 x 4

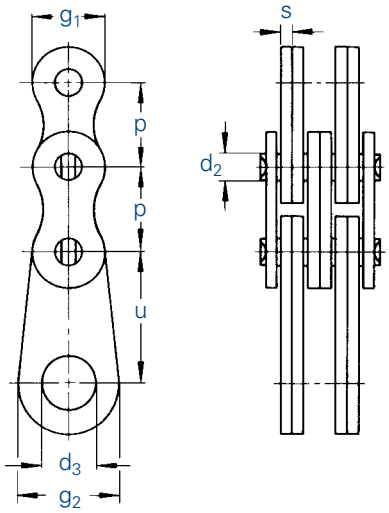

Outer end link
4 x 4

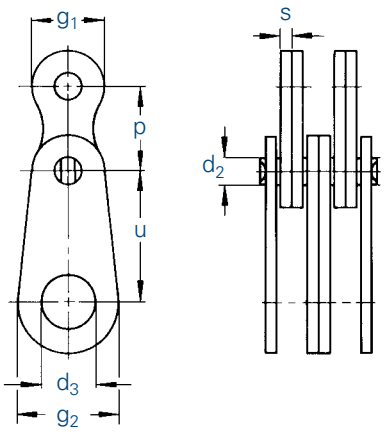

Connecting pin

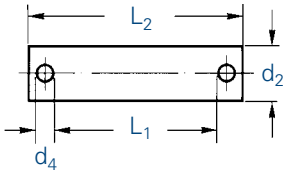

Leaf chains are only supplied with end links on customers' request. The design with either outer or inner end link must be stated in the order.

Design of chain ends:

Only the normal links are counted

A Both sides with inner end links (uneven number of links)
B Both sides with outer end links (uneven number of links)
C One side with inner end link, other side with outer end link (even number of links)
D One side with inner end link, other side with inner link (even number of links)
E One side with outer end link, other side with outer link (even number of links)
F One side with inner end link, other side with outer link (uneven number of links)
G One side with outer end link, other side with inner link (uneven number of links)
H Both sides with inner links (uneven number of links)
I Both sides with outer links (uneven number of links)
K One side with inner link, other side with outer link (even number of links)

Designation of a leaf chain design A with 25,4 mm pitch, combination 4 x 4, 45 normal links and end links on both sides:
F 254 A x 45

Chain		Nominal pitch		End plates								Connecting pins							
												2 x 2		4 x 4		6 x 6		8 x 8	
		p		u	d_2	d_3	g_1	g_2	s	d_2	d_4	L_1	L_2	L_1	L_2	L_1	L_2	L_1	L_2
No.	Ind.	mm	inch	mm	mm	mm	mm	mm	mm	mm	mm	mm	mm	mm	mm	mm	mm	mm	mm
F 12		12,7	½	30	4,45	10,0	10,5	20	1,55	4,45	1,6	6,8	13,0	13,6	19,8	20,4	26,6	-	-
F 15		15,875	⅝	30	5,08	10,0	12,5	20	1,70	5,08	1,6	7,4	13,6	14,8	21,0	21,8	28,0	-	-
F 19		19,05	¾	30	5,72	10,0	14,5	20	1,80	5,72	1,6	8,0	14,2	15,4	21,6	22,9	29,1	-	-
F 25		25,4	1	45	8,28	16,0	21,0	35	3,00	8,28	3,4	13,0	23,8	25,9	36,7	38,0	48,8	51,0	61,8
F 31		31,75	1 ¼	45	10,19	16,0	24,5	35	3,80	10,19	3,4	16,4	27,2	32,4	43,2	48,5	59,3	64,8	75,6
F 38		38,1	1 ½	60	14,63	26,0	33,0	50	5,00	14,63	4,2	21,3	33,7	42,4	54,8	63,5	75,9	84,8	97,2
F 50		50,8	2	70	17,81	36,0	43,0	70	6,00	17,81	4,2	25,5	37,9	50,5	62,9	75,5	87,9	100,7	113,0
F 63		63,5	2 ½	90	22,89	45,0	52,0	80	8,00	22,89	5,2	-	-	66,4	86,8	99,6	120,0	132,8	153,2
FU 12		12,7	½	30	4,45	10,0	11,5	20	1,55	4,45	1,6	-	-	13,6	19,8	20,4	26,6	-	-
FU 15		15,875	⅝	30	5,08	10,0	14,5	20	1,70	5,08	1,6	-	-	14,8	21,0	21,8	28,0	28,3	34,5
FU 15 S		15,875	⅝	20	5,08	8,3	14,7	18	2,00	5,08	1,6	-	-	-	-	25,6	31,8	-	-
FU 19		19,05	¾	30	5,72	10,0	15,4	20	1,80	5,72	1,6	-	-	15,4	21,6	22,9	29,1	-	-
FU 19 S		19,05	¾	25	6,50	10,3	18,0	20	2,30	6,50	1,6	-	-	19,6	25,8	29,3	35,5	-	-
FU 25		25,4	1	45	8,28	16,0	21,0	35	3,00	8,28	3,4	-	-	25,9	36,7	38,0	48,8	51	61,8
F 38 U		38,1	1 ½	60	14,63	26,0	33,0	50	5,00	14,63	4,2	-	-	48,4	61,0	70,0	82,4	90,8	103,2
F 50 U		50,8	2	70	17,81	36,0	43,0	70	6,00	17,81	4,2	-	-	56,5	68,9	81,5	93,9	106,8	119,2
F 63 U		63,5	2 ½	90	22,89	45,0	52,0	80	8,00	22,89	5,2	-	-	72,4	92,8	105,6	126,0	138,8	159,2

Other dimensions on request.

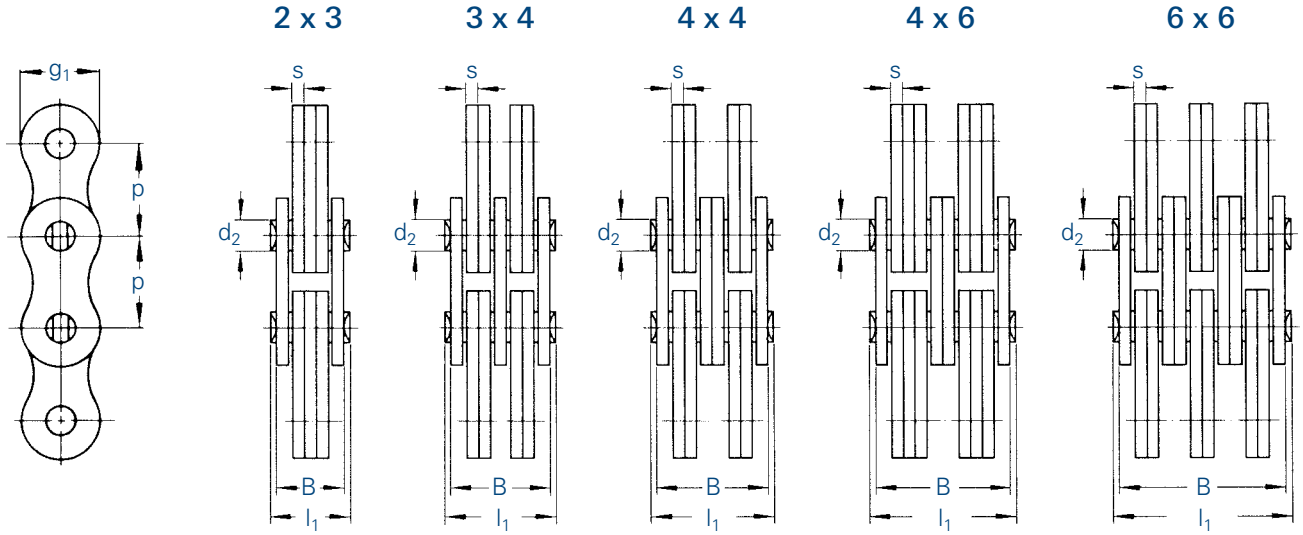

Chain		DIN	Nominal pitch		Lacing	Width over Pins	Width over Plates	Pin Ø	Plate thickness	Plate height	Effective length over 100 x pitch*	Bearing area	Minimum tensile strength DIN	Weight
			p			l_1 max.	B max.	d_2 max.	s	g_1 max.		f ≈	F_B min.	q ≈
No.	Ind.	No.	mm	inch		mm	mm	mm	mm	mm	mm	cm^2	kN	kg/m
BL 523		LH 1023	15,875	⅝	2 x 3	15,3	12,6	5,95	2,46	15,1	1592	0,43	33,4	1,18
BL 534		LH 1034	15,875	⅝	3 x 4	20,3	17,5	5,95	2,46	15,1	1592	0,57	50,1	1,63
BL 544		LH 1044	15,875	⅝	4 x 4	22,7	20,0	5,95	2,46	15,1	1592	0,57	66,8	1,86
BL 546		LH 1046	15,875	⅝	4 x 6	27,7	24,8	5,95	2,46	15,1	1592	0,86	66,8	2,32
BL 566		LH 1066	15,875	⅝	6 x 6	32,1	29,7	5,95	2,46	15,1	1592	0,86	100,2	2,77
BL 823		LH 1623	25,4	1	2 x 3	25,4	21,1	9,53	4,06	24,0	2544	1,11	84,5	2,98
BL 834		LH 1634	25,4	1	3 x 4	33,7	29,2	9,53	4,06	24,0	2544	1,49	126,8	4,14
BL 844		LH 1644	25,4	1	4 x 4	37,9	33,2	9,53	4,06	24,0	2544	1,49	169,0	4,72
BL 846		LH 1646	25,4	1	4 x 6	46,1	41,4	9,53	4,06	24,0	2544	2,23	169,0	5,88
BL 866		LH 1666	25,4	1	6 x 6	54,4	49,4	9,53	4,06	24,0	2544	2,23	253,6	7,04

* Chain length tolerance ± 0,25 % of unoiled chain under measuring force.

For a pre-selection of leaf chains see page 99 + 100.

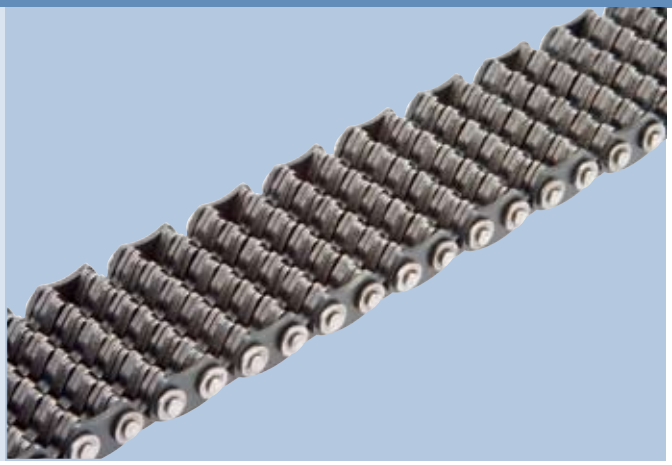

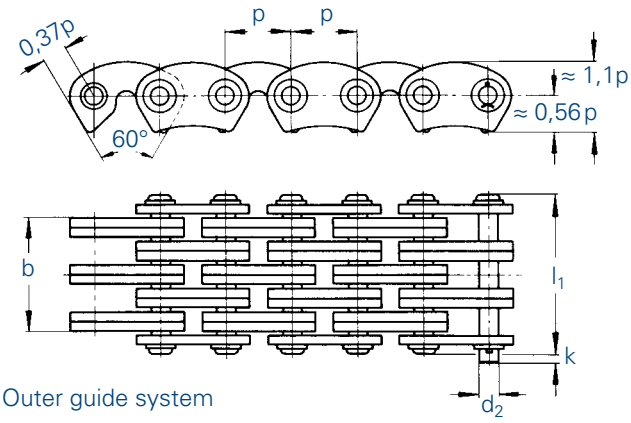

Outer guide system

Chain		Pitch	Lacing	Working width	Overall width	Pin Ø	Projection over connecting link	Bearing area	Minimum tensile strength	Weight
		p		b	l_1	d_2	k	f	F_B min.	q ≈
No.	Ind.	mm		mm	mm	mm	mm	cm^2	kN	kg/m
1110		10,0	1 x 2	9,6	17,6	3,15	1,6	0,20	11,0	0,64
1112		10,0	2 x 3	16,0	24,1	3,15	1,6	0,29	17,0	0,93
1114		10,0	4 x 5	28,9	37,1	3,15	1,6	0,49	28,0	1,56
1115		10,0	5 x 6	35,2	43,4	3,15	1,6	0,59	34,0	1,88

Inverted tooth chain sprockets on request.

When ordered by length in metres, the chain will contain the next higher even number of links with a connecting pin. When ordered by number of links, the chain will be supplied with an uneven number of links and include a single cranked link riveted into the chain as well as a connecting pin.

Connecting links (end links):

No. 10

Connecting pin

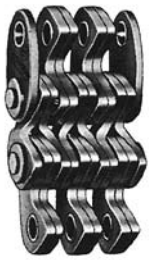

No. 52

Cranked three-joint connecting link

No. 53

Straight two-joint connecting link

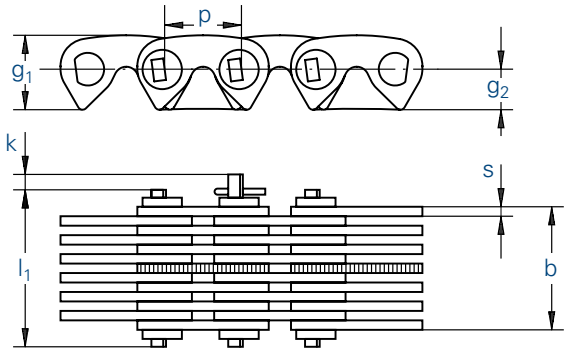

Inner guide system (J)

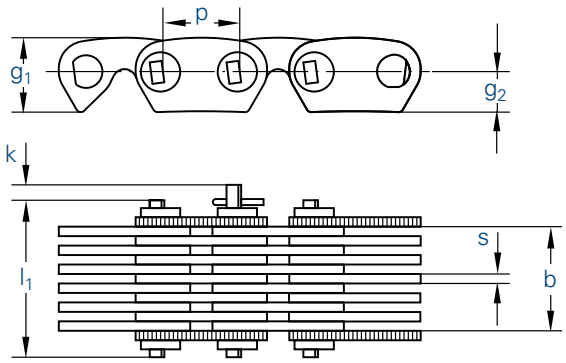

Outer guide system (A)

Chain		Pitch	Working width	Overall width	Plate height		Plate thickness	Projection over connecting link	Number of rows*	Minimum tensile strength	Measuring force	Weight
		p	b min.	l_1 max.	g_1 max.	g_2	s	k	RZ	F_B min.		q ≈
No.	Ind.	mm	mm	mm	mm	mm	mm	mm		kN	mm	kg/m
06-015A		9,525	12,5	20,0	9,2	5,2	1,50	2,0	10,0	14,5	14,5	0,64
06-020A		9,525	18,8	26,0	9,2	5,2	1,50	2,0	14,0	21,0	21,0	0,86
06-025J		9,525	26,5	31,0	9,2	5,2	1,50	2,0	17,0	27,4	27,4	0,94
06-030J		9,525	33,0	37,0	9,2	5,2	1,50	2,0	21,0	34,0	34,0	1,16
06-035J		9,525	39,0	44,0	9,2	5,2	1,50	2,0	25,0	40,0	40,0	1,39
08-015A		12,7	12,5	22,0	12,3	6,7	1,50	2,5	10,0	18,5	18,5	0,83
08-020A		12,7	19,0	27,5	12,3	6,7	1,50	2,5	14,0	26,5	26,5	1,12
08-025J		12,7	26,5	33,0	12,3	6,7	1,50	2,5	17,0	34,6	34,6	1,39
08-030J		12,7	33,0	39,0	12,3	6,7	1,50	2,5	21,0	43,0	43,0	1,54
08-035J		12,7	39,0	45,0	12,3	6,7	1,50	2,5	25,0	51,0	51,0	1,84
08-050J		12,7	51,5	58,0	12,3	6,7	1,50	2,5	33,0	67,5	67,5	2,42
08-065J		12,7	64,2	69,8	12,3	6,7	1,50	2,5	41,0	83,0	83,0	3,02
10-025J		15,875	27,0	33,0	15,4	8,4	2,00	3,0	13,0	46,0	46,0	1,68
10-035J		15,875	35,5	41,5	15,4	8,4	2,00	3,0	17,0	61,0	61,0	2,31
10-040J		15,875	43,7	49,5	15,4	8,4	2,00	3,0	21,0	75,5	75,5	2,75
10-050J		15,875	52,0	58,0	15,4	8,4	2,00	3,0	25,0	89,0	89,0	3,35
10-065J		15,875	69,0	74,5	15,4	8,4	2,00	3,0	33,0	117,5	117,5	4,30
12-035J		19,05	35,5	43,0	18,4	10,0	2,00	3,5	17,0	73,5	73,5	2,66
12-040J		19,05	44,0	51,0	18,4	10,0	2,00	3,5	21,0	91,0	91,0	3,22
12-050J		19,05	52,0	59,0	18,4	10,0	2,00	3,5	25,0	108,0	108,0	3,95
12-065J		19,05	68,5	76,0	18,4	10,0	2,00	3,5	33,0	142,0	142,0	5,15
12-075J		19,05	77,0	84,0	18,4	10,0	2,00	3,5	37,0	160,0	160,0	6,20
16-050J		25,4	53,0	61,0	25,0	13,1	3,00	4,0	17,0	127,0	127,0	5,60
16-065J		25,4	65,0	73,0	25,0	13,1	3,00	4,0	21,0	157,0	157,0	6,80
16-075J		25,4	77,5	85,5	25,0	13,1	3,00	4,0	25,0	187,0	187,0	8,20
16-100J		25,4	103,0	111,0	25,0	13,1	3,00	4,0	33,0	245,0	245,0	10,70
16-125J		25,4	127,0	135,0	25,0	13,1	3,00	4,0	41,0	304,0	304,0	12,70
24-065J		38,1	65,5	77,5	37,0	20,1	3,00	6,0	21,0	257,0	257,0	10,30
24-075J		38,1	78,0	90,0	37,0	20,1	3,00	6,0	25,0	306,0	306,0	11,60
24-100J		38,1	103,0	115,0	37,0	20,1	3,00	6,0	33,0	403,0	403,0	16,20
24-125J		38,1	127,5	139,5	37,0	20,1	3,00	6,0	41,0	500,0	500,0	20,10
24-150J		38,1	153,0	165,0	37,0	20,1	3,00	6,0	49,0	600,0	600,0	23,60
32-100J		50,8	104,0	117,0	49,2	26,8	4,00	7,0	25,0	490,0	490,0	22,40
32-115J		50,8	120,0	133,0	49,2	26,8	4,00	7,0	29,0	570,0	570,0	25,60
32-135J		50,8	138,0	151,0	49,2	26,8	4,00	7,0	33,0	650,0	650,0	28,30
32-150J		50,8	153,0	166,0	49,2	26,8	4,00	7,0	37,0	725,0	725,0	32,60
32-180J		50,8	186,0	199,0	49,2	26,8	4,00	7,0	45,0	880,0	880,0	38,20

* Plates on one pivot pin

Inverted tooth chain sprockets on request.

When ordered by length in metres, the chain will contain the next higher even number of links with a connecting pin. When ordered by number of links, the chain will be supplied with an uneven number of links and include a single cranked link riveted into the chain as well as a connecting pin.

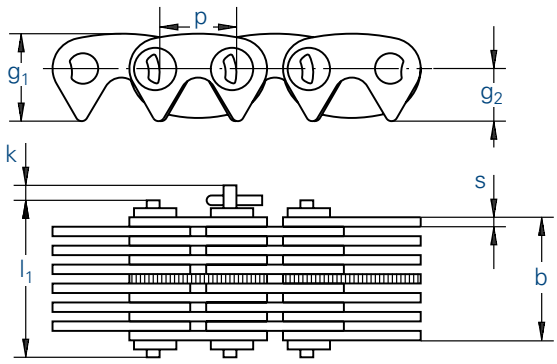

Inner guide system (J)

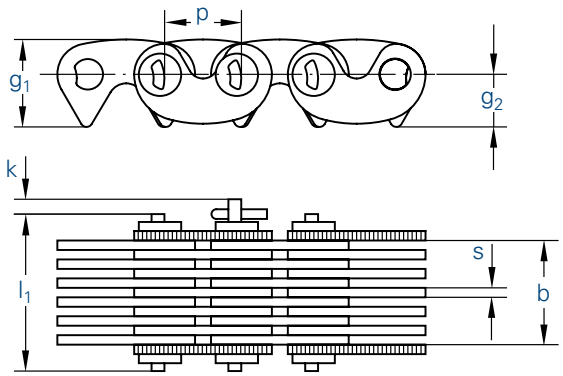

Outer guide system (A)

Chain		Pitch	Working width	Overall width	Plate height		Plate thickness	Projection over connecting link	Number of rows*	Minimum tensile strength	Measuring force	Weight
		p	b min.	l_1 max.	g_1 max.	g_2	s	k	RZ	F_B min.		q ≈
No.	Ind.	mm	mm	mm	mm	mm	mm	mm		kN	mm	kg/m
HD 06-015A		9,525	12,5	19,9	10,9	6,7	1,50	2,0	10,0	14,5	14,5	0,90
HD 06-020A		9,525	17,2	24,5	10,9	6,7	1,50	2,0	13,0	17,7	17,7	1,10
HD 06-025J		9,525	26,6	30,8	10,9	6,7	1,50	2,0	17,0	27,4	27,4	1,40
HD 06-030J		9,525	32,9	37,1	10,9	6,7	1,50	2,0	21,0	33,9	33,9	1,70
HD 06-040J		9,525	39,1	43,3	10,9	6,7	1,50	2,0	25,0	40,3	40,3	2,00
HD 06-050J		9,525	51,6	55,8	10,9	6,7	1,50	2,0	33,0	53,2	53,2	2,60
HD 06-065J		9,525	64,2	68,4	10,9	6,7	1,50	2,0	41,0	66,2	66,2	3,30
HD 08-015A		12,7	12,5	21,3	14,5	8,7	1,50	2,5	10,0	20,2	20,2	1,10
HD 08-020A		12,7	17,2	25,9	14,5	8,7	1,50	2,5	13,0	24,7	24,7	1,40
HD 08-025J		12,7	26,6	32,2	14,5	8,7	1,50	2,5	17,0	38,2	38,2	1,80
HD 08-030J		12,7	32,9	38,5	14,5	8,7	1,50	2,5	21,0	47,3	47,3	2,20
HD 08-040J		12,7	39,1	44,7	14,5	8,7	1,50	2,5	25,0	56,3	56,3	2,60
HD 08-050J		12,7	51,6	57,2	14,5	8,7	1,50	2,5	33,0	74,3	74,3	3,40
HD 08-065J		12,7	64,2	69,8	14,5	8,7	1,50	2,5	41,0	92,3	92,3	4,30
HD 08-075J		12,7	76,7	82,3	14,5	8,7	1,50	2,5	49,0	110,3	110,3	5,10
HP 08-100J		12,7	101,7	107,3	14,5	8,7	1,50	2,5	65,0	146,4	146,4	6,70
HD 12-030A		19,05	27,0	38,2	21,0	10,7	2,00	3,5	15,0	59,6	59,6	3,30
HD 12-035J		19,05	35,4	42,4	21,0	10,7	2,00	3,5	17,0	78,0	78,0	3,70
HD 12-040J		19,05	43,7	50,7	21,0	10,7	2,00	3,5	21,0	96,3	96,3	4,50
HD 12-050J		19,05	52,0	59,0	21,0	10,7	2,00	3,5	25,0	114,7	114,7	5,40
HD 12-065J		19,05	68,6	75,6	21,0	10,7	2,00	3,5	33,0	151,4	151,4	7,10
HD 12-085J		19,05	85,3	92,3	21,0	10,7	2,00	3,5	41,0	188,1	188,1	8,90
HD 12-100J		19,05	101,9	108,9	21,0	10,7	2,00	3,5	49,0	224,9	224,9	10,60
HD 12-125J		19,05	126,9	133,9	21,0	10,7	2,00	3,5	61,0	279,9	279,9	13,20
HD 12-150J		19,05	151,8	158,8	21,0	10,7	2,00	3,5	73,0	335,0	335,0	15,80
HD 12-200J		19,05	201,8	208,8	21,0	10,7	2,00	3,5	97,0	445,2	445,2	20,90
HD 16-040J		25,4	40,2	48,2	27,7	14,0	3,00	6,0	13,0	112,1	112,1	5,60
HD 16-050J		25,4	52,6	60,6	27,7	14,0	3,00	6,0	17,0	146,6	146,6	7,30
HD 16-065J		25,4	65,0	73,0	27,7	14,0	3,00	6,0	21,0	181,1	181,1	9,00
HD 16-075J		25,4	77,4	85,4	27,7	14,0	3,00	6,0	25,0	215,6	215,6	10,70
HD 16-100J		25,4	102,1	110,1	27,7	14,0	3,00	6,0	33,0	284,7	284,7	14,10
HD 16-125J		25,4	126,9	134,9	27,7	14,0	3,00	6,0	41,0	353,7	353,7	17,50
HD 16-150J		25,4	151,7	159,7	27,7	14,0	3,00	6,0	49,0	422,7	422,7	21,00
HD 16-200J		25,4	201,2	209,2	27,7	14,0	3,00	6,0	65,0	560,7	560,7	27,80

* Plates on one pivot pin

Inverted tooth chain sprockets on request.

When ordered by length in metres, the chain will contain the next higher even number of links with a connecting pin. For this type of inverted tooth chain no cranked links are available.

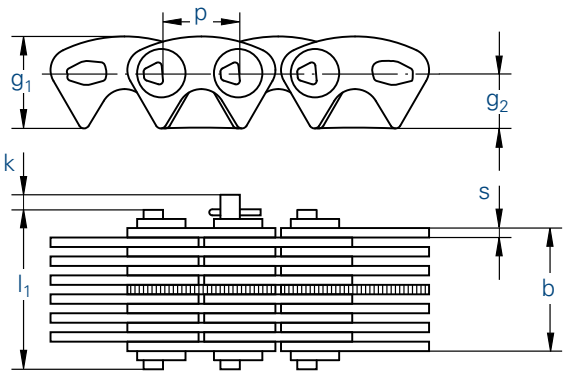

Inner guide system (J)

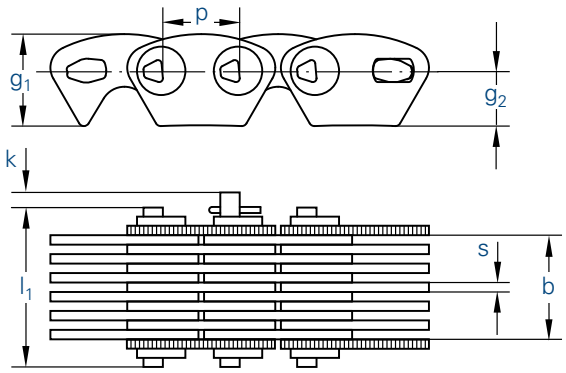

Outer guide system (A)

Chain		Pitch	Working width	Overall width	Plate height		Plate thickness	Projection over connecting link	Number of rows*	Minimum tensile strength	Measuring force	Weight
		p	b min.	l_1 max.	g_1 max.	g_2	s	k	RZ	F_B min.		q ≈
No.	Ind.	mm	mm	mm	mm	mm	mm	mm		kN	mm	kg/m
HP 06-015A		9,525	12,5	19,9	11,3	6,8	1,50	2,0	10,0	25,4	25,4	1,00
HP 06-020A		9,525	17,2	24,5	11,3	6,8	1,50	2,0	13,0	30,1	30,1	1,20
HP 06-025J		9,525	26,6	30,8	11,3	6,8	1,50	2,0	17,0	39,3	39,3	1,50
HP 06-030J		9,525	32,9	37,1	11,3	6,8	1,50	2,0	21,0	48,6	48,6	1,80
HP 06-040J		9,525	39,1	43,3	11,3	6,8	1,50	2,0	25,0	57,9	57,9	2,20
HP 06-050J		9,525	51,6	55,8	11,3	6,8	1,50	2,0	33,0	76,4	76,4	2,90
HP 06-065J		9,525	64,2	68,4	11,3	6,8	1,50	2,0	41,0	94,9	94,9	3,60
HP 08-015A		12,7	12,5	21,7	15,2	9,0	1,50	2,5	10,0	27,9	27,9	1,20
HP 08-020A		12,7	17,2	26,3	15,2	9,0	1,50	2,5	13,0	34,1	34,1	1,60
HP 08-025J		12,7	26,6	32,6	15,2	9,0	1,50	2,5	17,0	52,7	52,7	2,00
HP 08-030J		12,7	32,9	38,9	15,2	9,0	1,50	2,5	21,0	65,1	65,1	2,40
HP 08-040J		12,7	39,1	45,1	15,2	9,0	1,50	2,5	25,0	77,5	77,5	2,90
HP 08-050J		12,7	51,6	57,6	15,2	9,0	1,50	2,5	33,0	102,3	102,3	3,80
HP 08-065J		12,7	64,2	70,2	15,2	9,0	1,50	2,5	41,0	127,2	127,2	4,70
HP 08-075J		12,7	76,7	82,7	15,2	9,0	1,50	2,5	49,0	152,0	152,0	5,60
HP 08-100J		12,7	101,7	107,7	15,2	9,0	1,50	2,5	65,0	201,6	201,6	7,50
HP 08-125J		12,7	126,8	132,8	15,2	9,0	1,50	2,5	81,0	251,3	251,3	9,30
HP 08-150J		12,7	151,8	157,8	15,2	9,0	1,50	2,5	97,0	300,9	300,9	11,10
HP 12-020J		19,05	18,7	25,7	22,5	13,5	2,00	3,5	9,0	55,4	55,4	2,10
HP 12-025J		19,05	27,0	34,0	22,5	13,5	2,00	3,5	13,0	80,1	80,1	3,00
HP 12-030J		19,05	31,2	38,2	22,5	13,5	2,00	3,5	15,0	80,1	80,1	3,60
HP 12-035J		19,05	35,4	42,4	22,5	13,5	2,00	3,5	17,0	104,7	104,7	3,90
HP 12-040J		19,05	43,7	50,7	22,5	13,5	2,00	3,5	21,0	129,4	129,4	4,90
HP 12-050J		19,05	52,0	59,0	22,5	13,5	2,00	3,5	25,0	154,0	154,0	5,80
HP 12-065J		19,05	68,6	75,6	22,5	13,5	2,00	3,5	33,0	203,3	203,3	7,60
HP 12-085J		19,05	85,3	92,3	22,5	13,5	2,00	3,5	41,0	252,6	252,6	9,50
HP 12-100J		19,05	101,9	108,9	22,5	13,5	2,00	3,5	49,0	301,9	301,9	11,40
HP 12-125J		19,05	126,9	133,9	22,5	13,5	2,00	3,5	61,0	375,9	375,9	14,10
HP 12-150J		19,05	151,8	158,8	22,5	13,5	2,00	3,5	73,0	449,8	449,8	16,90
HP 12-200J		19,05	201,8	208,8	22,5	13,5	2,00	3,5	97,0	597,7	597,7	22,50
HP 16-040J		25,4	40,4	52,4	45,0	27,0	3,00	6,0	13,0	232,0	232,0	9,00
HP 16-050J		25,4	52,8	64,8	45,0	27,0	3,00	6,0	17,0	303,4	303,4	11,80
HP 16-065J		25,4	65,2	77,2	45,0	27,0	3,00	6,0	21,0	374,8	374,8	14,60
HP 16-075J		25,4	77,6	89,6	45,0	27,0	3,00	6,0	25,0	446,2	446,2	17,40
HP 16-100J		25,4	102,5	114,5	45,0	27,0	3,00	6,0	33,0	589,0	589,0	22,90
HP 16-125J		25,4	127,3	139,3	45,0	27,0	3,00	6,0	41,0	731,8	731,8	28,50
HP 16-150J		25,4	152,1	164,1	45,0	27,0	3,00	6,0	49,0	874,6	874,6	34,10
HP 16-200J		25,4	201,8	213,8	45,0	27,0	3,00	6,0	65,0	1160,2	1160,2	45,20

* Plates on one pivot pin

Inverted tooth chain sprockets on request.

When ordered by length in metres, the chain will contain the next higher even number of links with a connecting pin. For this type of inverted tooth chain no cranked links are available.

On the following pages, we will only be able to give you a brief overview of the types of chains we can supply since conveyor chains are mostly chains designed for individual applications.

Please send us an enquiry, if you have any queries concerning your specific application.

1. **Sprockets for all chains made of steel, cast steel and cast iron, also in split versions and with welded-on segments.**

2. **Special chains for process engineering equipment of all kind; also made of stainless and heat resistant steel grades.**

3. **Draw bench chains**
   - according to DIN 8156 and DIN 8157

4. **Conveyor chains / Deep link conveyor chains / Accumulation conveyor chains**
   - according to DIN 8165 full pin chains and hollow pin chains / type FV
   - according to DIN 8167 full pin chains / type M
   - according to DIN 8168 hollow pin chains / type MC
   - Made to specifications for all applications

5. **Moving staircase chains**
   - according to works-standard and customers' specifications

6. **Plate chains for steel plate apron conveyor chains**
   - according to DIN 8175

7. **Plate chains for funiculars**
   - according to DIN 8176 and DIN Berg 2251

8. **Inverted tooth chains according to DIN 8190**
   - Inverted tooth chains for high speed drives
   - Inverted tooth chains made to specifications / Inverted tooth chains for transport

9. **Inverted tooth chain sprockets**
   - according to customers' specifications

10. **Sliding rails**

11. **Cranked link chains**

12. **Galle chains and sprockets**
    - according to DIN 8150

13. **ATC magazine chains and sprockets**

We will be happy to assist you with all your problems concerning drives and conveyance!

Chain breaker

Chain breaker

With only a few hammer blows a chain can be broken within seconds - and all this without a vice or a grinding machine!

A powerful WIPPERMANN chain breaker: simple, effective and practical.

No.	suitable for the following chains
KT 455	454, 455, 331, 332, D 455 ASA 35, 40, 41, 35-2, 40-2
KT 462	331, 332, 17, 18, 385, 460, 461, 462, D462 ASA 35, 40, 41, 40-2
KT 501-213	500,501,513,D501,D513 ASA 50, 60, 50-2
KT 548	548 ASA 80

Accessories: Screw A
Screw B
Replacement pin C


Chain puller 125 mm

Chain puller

Due to the overall weight it is often extremely cumbersome to assemble two chain ends without any tools.

By means of our practical chain puller, the two ends of the chain are pulled together far enough for a connecting link to be mounted without any difficulties.

This chain puller can be supplied in two sizes:

No.	For chain pitches p	Clamping width	Weight
135	12,7 bis 19,05 mm	50,0 mm	0,2 kg
180	25,4 bis 63,50 mm	125,0 mm	1,0 kg


Chain puller 50 mm

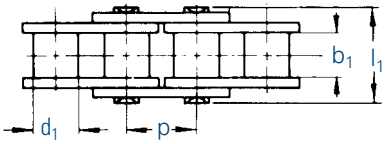

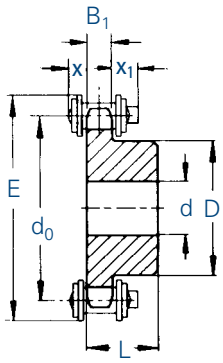

Chain			Pitch	Inner width	Roller Ø	Width over pin	Tooth width	Projection	
		DIN	p	b_1 min.	d_1 max.	l_1 max.	B_1	x max.	x_1 max.
No.	Ind.	No.	mm	mm	mm	mm	mm	mm	mm
445		04	6,0	2,8	4,0	7,4	2,6	2,5	3,0
450		05B-1	8,0	3,0	5,0	8,6	2,8	5,4	6,1

Number of teeth		445 (04)					450 (05B-1)				
z		d_0	E_{max}	d	D	L	d_0	E_{max}	d	D	L
No.	Ind.	mm	mm	mm	mm	mm	mm	mm	mm	mm	mm
10		19,42	25	6	13	10	25,89	34	8	17	12
11		21,30	27	6	14	10	28,40	36	8	18	13
12		23,18	29	6	16	10	30,91	39	8	20	13
13		25,07	31	8	18	10	33,43	41	8	23	13
14		26,96	33	8	20	10	35,95	44	8	25	13
15		28,86	35	8	20	10	38,48	46	8	28	13
16		30,75	36	8	20	13	41,01	49	8	30	14
17		32,65	38	8	20	13	43,54	51	8	30	14
18		34,55	40	8	20	13	46,07	54	8	30	14
19		36,45	42	8	20	13	48,60	57	8	30	14
20		38,36	44	8	20	13	51,14	59	8	30	14
21		40,26	46	8	25	13	53,68	62	8	35	14
22		42,16	48	8	25	13	56,21	64	8	35	14
23		44,06	50	8	25	13	58,75	67	8	35	14
24		45,97	51	8	25	13	61,29	69	8	35	14
25		47,87	53	8	25	13	63,83	72	8	35	14
26		49,78	55	8	30	15	66,37	74	10	40	16
27		51,68	57	8	30	15	68,91	77	10	40	16
28		53,59	59	8	30	15	71,45	79	10	40	16
29		55,49	61	8	30	15	73,99	82	10	40	16
30		57,40	63	8	30	15	76,53	84	10	40	16
32		61,21	67	8	30	15	81,62	90	10	40	16
34		65,03	71	8	30	15	86,70	94	10	40	16
35		66,93	73	8	30	15	89,25	97	10	40	16
36		68,84	75	8	30	15	91,79	100	10	40	16
38		72,66	78	8	30	15	96,88	105	10	40	16
40		76,47	82	8	30	15	101,96	110	10	40	16

Made of steel with a strength of 500 - 600 N/mm². We supply sprockets with custom bore and groove according to specifications. For details on orders and enquiries see page 89. Other sprockets on request.

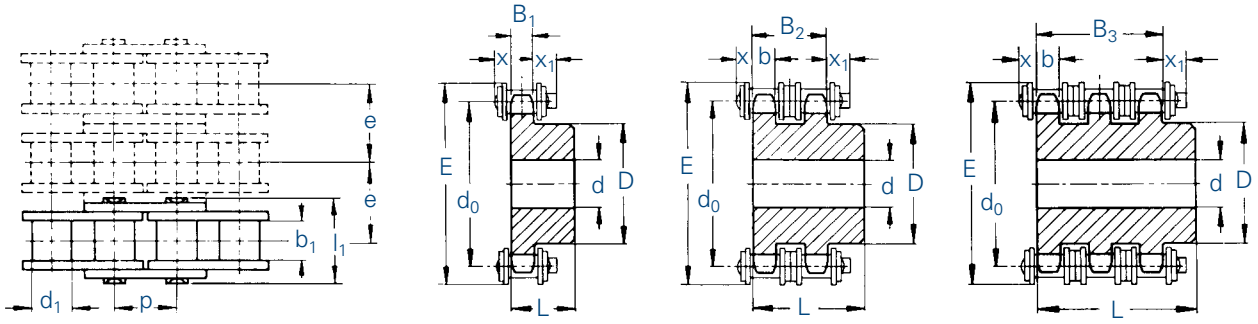

Chain		DIN	Pitch	Inner width	Roller Ø	Width over pin	Transverse pitch	Tooth width				Projection	
			p	b_1 min.	d_1 max.	l max.	e	B_1	b	B_2	B_3	x max.	x_1 max.
No.	Ind.		mm	mm	mm	mm	mm	mm	mm	mm	mm	mm	mm
455		06B-1	9,525	5,72	6,35	13,5	-	5,3	-	-	-	4,5	7,8
D 455		06B-2	9,525	5,72	6,35	23,8	10,24	-	5,2	15,4	-	4,5	7,8
T 455		06B-3	9,525	5,72	6,35	34,0	10,24	-	5,2	-	25,6	4,5	7,8

Number of teeth		d_0	E_{max}	455 (06B-1)			D 455 (06B-2)			T 455 (06B-3)		
z				d	D	L	d	D	L	d	D	L
No.	Ind.	mm	mm	mm	mm	mm	mm	mm	mm	mm	mm	mm
10		30,82	40	8	20	22	8	20	22	-	-	-
11		33,81	43	8	22	25	10	22	25	-	-	-
12		36,80	46	8	25	25	10	25	25	-	-	-
13		39,80	49	10	28	25	10	28	25	10	28	35
14		42,81	52	10	31	25	10	31	25	-	-	-
15		45,81	55	10	34	25	10	34	25	12	34	35
16		48,82	58	10	37	28	12	37	30	-	-	-
17		51,84	61	10	40	28	12	40	30	12	40	35
18		54,85	64	10	43	28	12	43	30	-	-	-
19		57,87	67	10	45	28	12	46	30	12	46	35
20		60,89	70	10	46	28	12	49	30	-	-	-
21		63,91	73	12	48	28	12	52	30	14	52	40
22		66,93	76	12	50	28	12	55	30	-	-	-
23		69,95	79	12	52	28	12	58	30	14	58	40
24		72,97	82	12	54	28	12	61	30	-	-	-
25		76,00	85	12	57	28	12	64	30	14	64	40
26		79,02	88	12	60	28	12	67	30	-	-	-
27		82,05	92	12	60	28	12	70	30	14	70	40
28		85,07	95	12	60	28	12	73	30	-	-	-
29		88,10	98	12	60	28	12	76	30	-	-	-
30		91,12	101	12	60	30	12	79	30	14	79	40
31		94,15	104	14	65	30	-	-	-	-	-	-
32		97,18	107	14	65	30	16	80	30	-	-	-
33		100,20	110	14	65	30	-	-	-	-	-	-
34		103,23	113	14	65	30	-	-	-	-	-	-
35		106,26	116	14	65	30	-	-	-	-	-	-
36		109,29	119	16	70	30	-	-	-	-	-	-
37		112,31	122	16	70	30	-	-	-	-	-	-
38		115,34	125	16	70	30	16	90	30	16	90	40
39		118,37	128	16	70	30	-	-	-	-	-	-
40		121,40	131	16	70	30	16	90	30	-	-	-
38	*	115,34	125	19	70	32	19	80	40	-	-	-
45	*	136,55	146	19	70	32	-	-	-	23	90	56
57	*	172,91	182	19	70	32	19	80	40	23	90	56

* Cast iron GG22

Made of steel with a strength of 500 - 600 N/mm². We supply sprockets with custom bore and groove according to specifications. For details on orders and enquiries see page 89. Other sprockets on request.

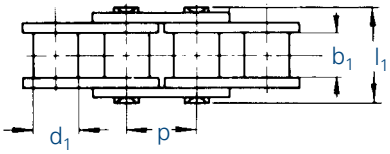

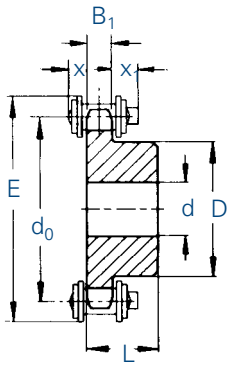

Chain			Pitch	Inner width	Roller Ø	Width over pin	Tooth width	Projection	
		DIN	p	b_1 min.	d_1 max.	l_1 max.	B_1	x max.	x_1 max.
No.	Ind.		mm	mm	mm	mm	mm	mm	mm
331		081	12,7	3,30	7,75	10,2	3,0	3,8	5,3
332		-	12,7	4,88	7,75	11,2	4,5	3,8	5,3

Number of teeth		331 (081)					332 / 17 / 18				
z		d_0	E_{max}	d	D	L	d_0	E_{max}	d	D	L
No.	Ind.	mm	mm	mm	mm	mm	mm	mm	mm	mm	mm
10		41,10	51	8	28	14	41,10	51	8	28	14
11		45,08	55	8	31	16	45,08	55	8	31	16
12		49,07	59	8	35	16	49,07	59	8	35	16
13		53,07	63	8	39	16	53,07	63	8	39	16
14		57,07	67	8	43	16	57,07	67	8	43	16
15		61,08	71	8	47	16	61,08	71	8	47	16
16		65,10	75	10	50	18	65,10	75	10	50	18
17		69,12	79	10	50	18	69,12	79	10	50	18
18		73,14	84	10	50	18	73,14	84	10	50	18
19		77,16	88	10	50	18	77,16	88	10	50	18
20		81,18	92	10	50	18	81,18	92	10	50	18
21		85,21	96	12	60	20	85,21	96	12	60	20
22		89,24	100	12	60	20	89,24	100	12	60	20
23		93,27	104	12	60	20	93,27	104	12	60	20
24		97,30	108	12	60	20	97,30	108	12	60	20
25		101,33	112	12	60	20	101,33	112	12	60	20
26		105,36	116	16	70	20	105,36	116	16	70	20
27		109,40	120	16	70	20	109,40	120	16	70	20
28		113,43	124	16	70	20	113,43	124	16	70	20
29		117,46	128	16	70	20	117,46	128	16	70	20
30		121,50	132	16	70	20	121,50	132	16	70	20
34		-	-	-	-	-	137,64	148	16	70	20
36		-	-	-	-	-	145,72	156	16	70	25
38		-	-	-	-	-	153,79	165	16	70	25
40		-	-	-	-	-	161,87	173	16	70	25

Made of SM steel with a strength of 500 - 600 N/mm². We supply sprockets with custom bore and groove according to specifications. For details on orders and enquiries see page 89. Other sprockets on request.

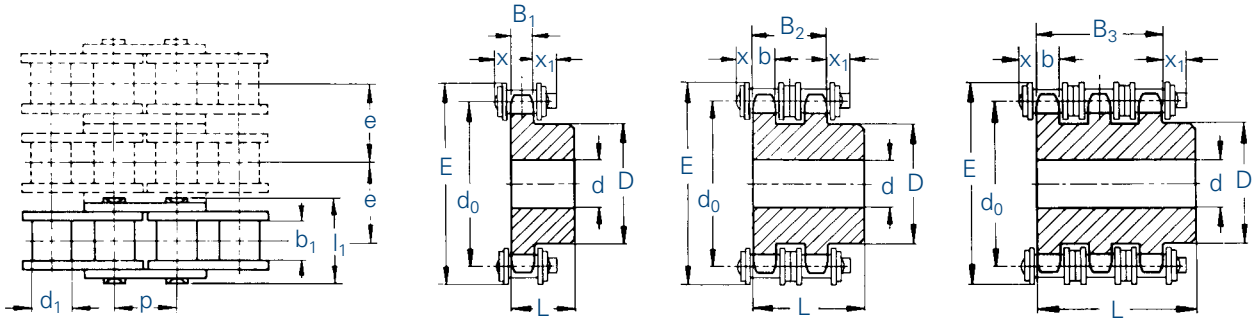

Chain		DIN	Pitch	Inner width	Roller Ø	Width over pin	Transverse pitch	Tooth width				Projection	
			p	b_1 min.	d_1 max.	l max.	e	B_1	b	B_2	B_3	x max.	x_1 max.
No.	Ind.	No.	mm	mm	mm	mm	mm	mm	mm	mm	mm	mm	mm
462		08 B-1	12,7	7,75	8,51	17,0	-	7,2	-	-	-	5,4	9,3
D 462		08 B-2	12,7	7,75	8,51	31,0	13,92	-	7,0	21,0	-	5,4	9,3
T 462		08 B-3	12,7	7,75	8,51	44,9	13,92	-	7,0	-	34,9	5,4	9,3

Number of teeth		d_0	E_{max}	462 (08B-1)			D 462 (08B-2)			T 462 (08B-3)		
z				d	D	L	d	D	L	d	D	L
	Ind.	mm	mm	mm	mm	mm	mm	mm	mm	mm	mm	mm
10		41,10	54	10	26	25	10	28	32	-	-	-
11		45,08	58	10	29	25	12	32	35	-	-	-
12		49,07	62	10	33	28	12	35	35	-	-	-
13		53,07	66	10	37	28	12	38	35	14	38	50
14		57,07	70	10	41	28	12	42	35	-	-	-
15		61,08	74	10	45	28	12	46	35	14	46	50
16		65,10	78	12	50	28	14	50	35	-	-	-
17		69,12	82	12	52	28	14	54	35	16	54	50
18		73,14	86	12	56	28	14	58	35	-	-	-
19		77,16	90	12	60	28	14	62	35	16	62	50
20		81,18	94	12	64	28	14	66	35	-	-	-
21		85,21	98	12	68	28	16	70	40	20	70	55
22		89,24	102	12	70	28	16	70	40	-	-	-
23		93,27	106	14	70	28	16	70	40	20	70	55
24		97,30	110	14	70	28	16	75	40	-	-	-
25		101,33	114	14	70	28	16	80	40	20	80	55
26		105,36	118	16	70	30	20	85	40	-	-	-
27		109,40	122	16	70	30	20	85	40	20	85	55
28		113,43	126	16	70	30	20	90	40	-	-	-
29		117,46	130	16	80	30	20	95	40	-	-	-
30		121,50	134	16	80	30	20	100	40	20	100	55
31		125,53	138	16	90	30	-	-	-	-	-	-
32		129,57	142	16	90	30	20	100	40	-	-	-
33		133,61	146	16	90	30	-	-	-	-	-	-
34		137,64	150	16	90	30	-	-	-	-	-	-
35		141,68	154	16	90	30	20	100	40	-	-	-
36		145,72	158	16	90	35	20	110	40	-	-	-
37		149,75	162	16	90	35	-	-	-	-	-	-
38		153,79	166	16	90	35	20	110	40	25	120	55
39		157,83	170	16	90	35	-	-	-	-	-	-
40		161,87	174	16	90	35	20	110	40	-	-	-
38	*	153,79	166	-	-	-	23	90	50	23	100	60
45	*	182,06	195	19	70	40	-	-	-	-	-	-
57	*	230,54	243	19	70	40	23	90	50	23	100	60

* Cast iron GG22

Made of SM steel with a strength of 500 - 600 N/mm². We supply sprockets with custom bore and groove according to specifications. For details on orders and enquiries see page 89. Other sprockets on request.

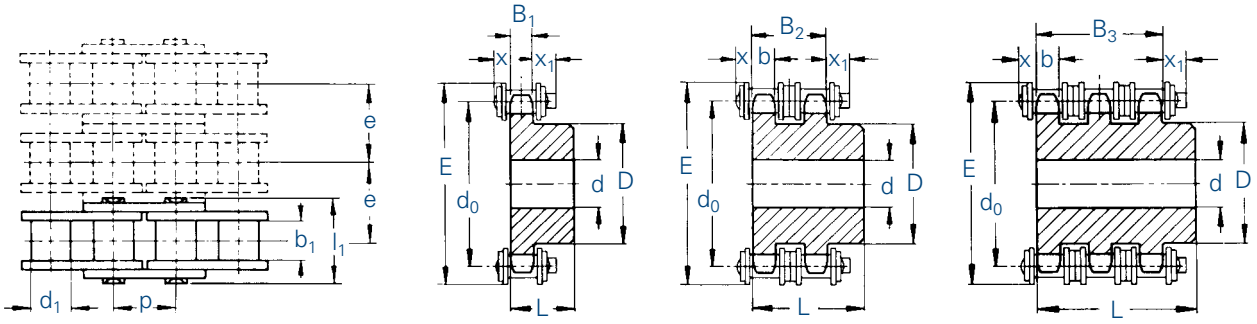

Chain		DIN	Pitch	Inner width	Roller Ø	Width over pin	Transverse pitch	Tooth width				Projection	
			p	b_1 min.	d_1 max.	l max.	e	B_1	b	B_2	B_3	x max.	x_1 max.
No.	Ind.		mm	mm	mm	mm	mm	mm	mm	mm	mm	mm	mm
501		10 B-1	15,875	9,65	10,16	19,6	-	9,1	-	-	-	5,6	9,7
D 501		10 B-2	15,875	9,65	10,16	36,2	16,59	-	9,0	25,5	-	5,6	9,7
T 501		10 B-3	15,875	9,65	10,16	52,8	16,59	-	9,0	-	42,1	5,6	9,7

Number of teeth		d_0	E_{max}	501 (10B-1)			D 501 (10B-2)			T 501 (10B-3)		
z				d	D	L	d	D	L	d	D	L
	Ind.	mm	mm	mm	mm	mm	mm	mm	mm	mm	mm	mm
10		51,37	68	10	35	25	12	35	40	-	-	-
11		56,35	72	12	37	30	14	39	40	-	-	-
12		61,34	77	12	42	30	14	44	40	-	-	-
13		66,34	82	12	47	30	14	49	40	16	49	55
14		71,34	87	12	52	30	14	54	40	-	-	-
15		76,35	92	12	57	30	14	59	40	16	59	55
16		81,37	97	12	60	30	16	64	45	-	-	-
17		86,39	102	12	60	30	16	69	45	16	69	60
18		91,42	107	14	70	30	16	74	45	-	-	-
19		96,45	112	14	70	30	16	79	45	16	79	60
20		101,48	117	14	75	30	16	84	45	-	-	-
21		106,51	122	16	75	30	16	85	45	20	85	60
22		111,55	127	16	80	30	16	90	45	-	-	-
23		116,59	132	16	80	30	16	95	45	20	95	60
24		121,62	137	16	80	30	16	100	45	-	-	-
25		126,66	142	16	80	30	16	105	45	20	105	60
26		131,7	147	20	85	35	20	110	45	-	-	-
27		136,74	152	20	85	35	20	110	45	20	110	60
28		141,79	157	20	90	35	20	115	45	-	-	-
29		146,83	162	20	90	35	20	115	45	-	-	-
30		151,87	167	20	90	35	20	120	45	20	120	60
31		156,92	173	20	95	35	-	-	-	-	-	-
32		161,96	178	20	95	35	20	120	45	-	-	-
33		167,01	183	20	95	35	-	-	-	-	-	-
34		172,05	188	20	95	35	-	-	-	-	-	-
35		177,1	193	20	95	35	-	-	-	-	-	-
36		182,14	198	20	100	35	-	-	-	-	-	-
37		187,19	203	20	100	35	-	-	-	-	-	-
38		192,24	208	20	100	35	20	120	45	25	120	60
39		197,29	213	20	100	35	-	-	-	-	-	-
40		202,35	218	20	100	35	20	120	45	-	-	-
38	*	192,24	208	-	-	-	29	100	50	31	100	60
45	*	227,58	243	19	80	40	-	-	-	-	-	-
57	*	288,18	304	23	90	45	29	100	56	31	100	63

* Cast iron GG22

Made of steel with a strength of 500 - 600 N/mm². We supply sprockets with custom bore and groove according to specifications. For details on orders and enquiries see page 89. Other sprockets on request.

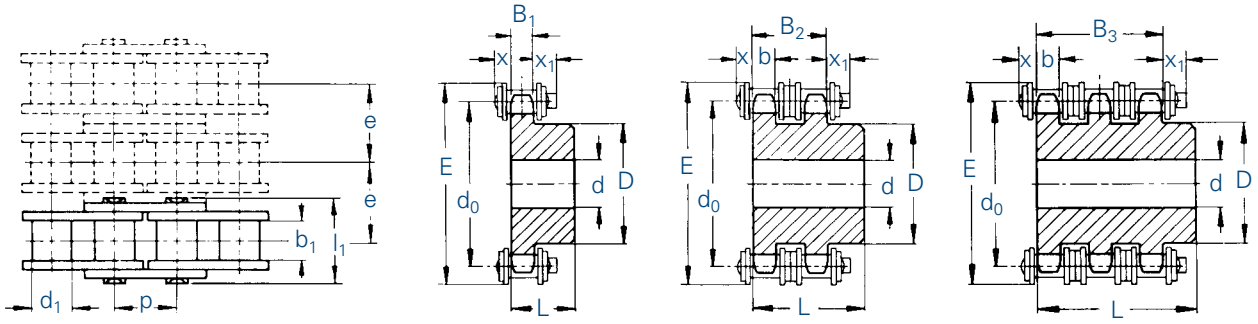

Chain		DIN	Pitch	Inner width	Roller Ø	Width over pin	Transverse pitch	Tooth width				Projection	
			p	b_1 min.	d_1 max.	l max.	e	B_1	b	B_2	B_3	x max.	x_1 max.
No.	Ind.		mm	mm	mm	mm	mm	mm	mm	mm	mm	mm	mm
513		12 B-1	19,05	11,68	12,07	22,7	-	11,1	-	-	-	6,4	11,0
D 513		12 B-2	19,05	11,68	12,07	42,2	19,46	-	10,8	30,3	-	6,4	11,0
T 513		12 B-3	19,05	11,68	12,07	61,7	19,46	-	10,8	-	49,8	6,4	11,0

Number of teeth		d_0	E_{max}	513 (12 B-1)			D 513 (12 B-2)			T 513 (12 B-3)		
z				d	D	L	d	D	L	d	D	L
	Ind.	mm	mm	mm	mm	mm	mm	mm	mm	mm	mm	mm
10		61,65	79	12	42	30	12	42	45	-	-	-
11		67,62	85	14	46	35	16	47	50	-	-	-
12		73,6	91	14	52	35	16	53	50	-	-	-
13		79,6	97	14	58	35	16	59	50	20	59	70
14		85,61	103	14	64	35	16	65	50	-	-	-
15		91,62	109	14	70	35	16	71	50	20	71	70
16		97,65	115	16	75	35	20	77	50	-	-	-
17		103,67	121	16	80	35	20	83	50	20	83	70
18		109,71	127	16	80	35	20	89	50	-	-	-
19		115,74	133	16	80	35	20	95	50	20	95	70
20		121,78	139	16	80	35	20	100	50	-	-	-
21		127,82	145	20	90	40	20	100	50	20	100	70
22		133,86	151	20	90	40	20	100	50	-	-	-
23		139,9	157	20	90	40	20	110	50	20	110	70
24		145,95	163	20	90	40	20	110	50	-	-	-
25		151,99	169	20	90	40	20	120	50	20	120	70
26		158,04	176	20	95	40	20	120	50	-	-	-
27		164,09	182	20	95	40	20	120	50	-	-	-
28		170,14	188	20	95	40	20	120	50	-	-	-
29		176,2	194	20	95	40	20	120	50	-	-	-
30		182,25	200	20	95	40	20	120	50	20	120	70
31		188,3	206	20	100	40	-	-	-	-	-	-
32		194,35	212	20	100	40	-	-	-	-	-	-
33		200,41	218	20	100	40	-	-	-	-	-	-
34		206,46	224	20	100	40	-	-	-	-	-	-
35		212,52	230	20	100	40	-	-	-	-	-	-
36		218,57	236	20	100	40	-	-	-	-	-	-
37		224,63	242	20	100	40	-	-	-	-	-	-
38		230,69	248	20	100	40	25	120	50	25	130	70
39		236,74	254	20	100	40	-	-	-	25	130	70
40		242,8	260	20	100	40	25	120	50	-	-	-
38	*	230,69	248	-	-	-	23	130	63	31	140	70
45	*	273,09	290	23	100	56	-	-	-	-	-	-
57	*	345,81	363	29	100	56	29	130	63	39	140	70

* Cast iron GG22

Made of steel with a strength of 500 - 600 N/mm². We supply sprockets with custom bore and groove according to specifications. For details on orders and enquiries see page 89. Other sprockets on request.

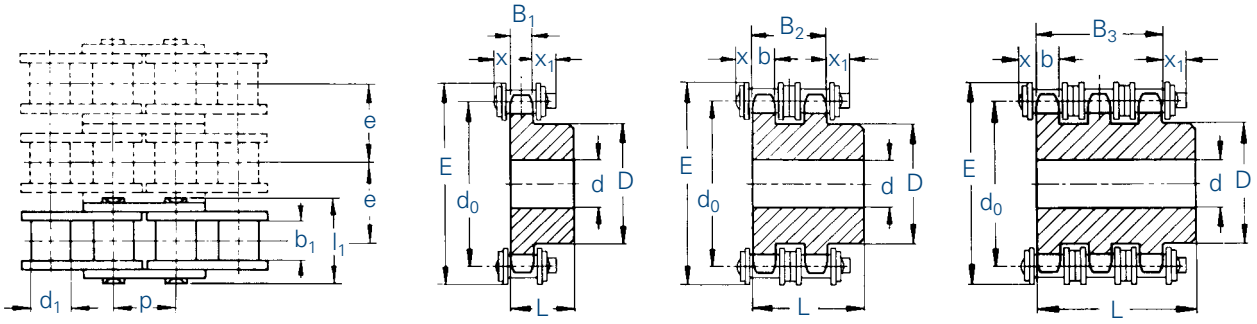

Chain		DIN	Pitch	Inner width	Roller Ø	Width over pin	Transverse pitch	Tooth width				Projection	
			p	b_1 min.	d_1 max.	l max.	e	B_1	b	B_2	B_3	x max.	x_1 max.
No.	Ind.	No.	mm	mm	mm	mm	mm	mm	mm	mm	mm	mm	mm
548		16 B-1	25,4	17,02	15,88	36,1	-	16,2	-	-	-	10,8	16,2
D 548		16 B-2	25,4	17,02	15,88	68,0	31,88	-	15,8	47,7	-	10,8	16,2
T 548		16 B-3	25,4	17,02	15,88	99,9	31,88	-	15,8	-	79,6	10,8	16,2

Number of teeth		d_0	E_{max}	548 (16 B-1)			D 548 (16 B-2)			T 548 (16 B-3)		
z				d	D	L	d	D	L	d	D	L
	Ind.	mm	mm	mm	mm	mm	mm	mm	mm	mm	mm	mm
10		82,2	104	16	55	35	16	56	65	-	-	-
11		90,16	112	16	61	40	20	64	70	25	64	100
12		98,14	120	16	69	40	20	72	70	-	-	-
13		106,14	128	16	78	40	20	80	70	25	80	100
14		114,15	136	16	84	40	20	88	70	-	-	-
15		122,17	144	16	92	40	20	96	70	25	96	100
16		130,2	152	20	100	45	20	104	70	-	-	-
17		138,23	160	20	100	45	20	112	70	30	112	100
18		146,27	168	20	100	45	20	120	70	-	-	-
19		154,32	176	20	100	45	20	128	70	30	128	100
20		162,37	184	20	100	45	20	130	70	-	-	-
21		170,42	192	20	110	50	25	130	70	30	130	100
22		178,48	200	20	110	50	25	130	70	-	-	-
23		186,54	208	20	110	50	25	130	70	30	130	100
24		194,6	216	20	110	50	25	130	70	-	-	-
25		202,66	224	20	110	50	25	130	70	30	130	100
26		210,72	232	20	120	50	25	130	70	-	-	-
27		218,79	240	20	120	50	25	130	70	-	-	-
28		226,86	248	20	120	50	25	130	70	-	-	-
29		234,93	256	20	120	50	25	130	70	-	-	-
30		243	265	20	120	50	25	130	70	30	130	100
32		259,14	281	25	120	50	-	-	-	-	-	-
34		275,29	297	25	120	50	-	-	-	-	-	-
35		283,36	305	25	120	50	-	-	-	-	-	-
36		291,43	313	25	120	50	-	-	-	-	-	-
38		307,58	329	25	120	50	25	140	70	30	140	100
40		323,74	345	25	120	50	25	140	70	-	-	-
45	*	364,12	386	29	125	70	-	-	-	-	-	-
57	*	461,08	483	34	125	70	39	160	90	44	165	100

* Cast iron GG22

Made of steel with a strength of 500 - 600 N/mm². We supply sprockets with custom bore and groove according to specifications. For details on orders and enquiries see page 89. Other sprockets on request.

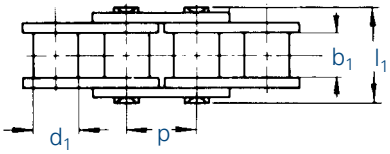

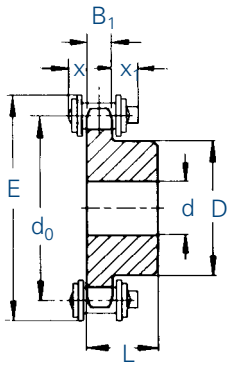

Chain			Pitch	Inner width	Roller Ø	Width over pin	Tooth width	Projection	
		DIN	p	b_1 min.	d_1 max.	l_1 max.	B_1	x max.	x_1 max.
No.	Ind.	No.	mm	mm	mm	mm	mm	mm	mm
563		20 B-1	31,75	19,56	19,05	43,2	18,5	12,8	18,9
596		24 B-1	38,10	25,40	25,40	53,4	24,1	16,0	22,6

Number of teeth		563 (20 B-1)					596 (24 B-1)				
z		d_0	E_{max}	d	D	L	d_0	E_{max}	d	D	L
	Ind.	mm	mm	mm	mm	mm	mm	mm	mm	mm	mm
10		102,75	130	20	70	40	123,30	157	20	80	45
11		112,69	139	20	77	45	135,23	169	25	90	50
12		122,67	149	20	88	45	147,21	181	25	102	50
13		132,67	159	20	98	45	159,21	193	25	114	50
14		142,68	169	20	108	45	171,22	205	25	128	50
15		152,71	179	20	118	45	183,25	217	25	140	50
16		162,74	190	25	120	50	195,29	229	25	140	55
17		172,79	200	25	120	50	207,35	241	25	140 *	55
18		182,84	210	25	120	50	219,41	253	25	140 *	55
19		192,90	220	25	120 *	50	231,48	265	25	140 *	55
20		202,96	230	25	120 *	50	243,55	277	25	140 *	55
21		213,03	240	25	140 *	55	255,63	289	25	150 *	60
22		223,10	250	25	140 *	55	267,72	302	25	150 *	60
23		233,17	260	25	140 *	55	279,81	314	25	150 *	60
24		243,25	270	25	140 *	55	291,90	326	25	150 *	60
25		253,32	280	25	140 *	55	303,99	338	25	150 *	60

* Possibly welded-on hub

Made of steel with a strength of 500 - 600 N/mm². We supply sprockets with custom bore and groove according to specifications. For details on orders and enquiries see page 89. Other sprockets on request.

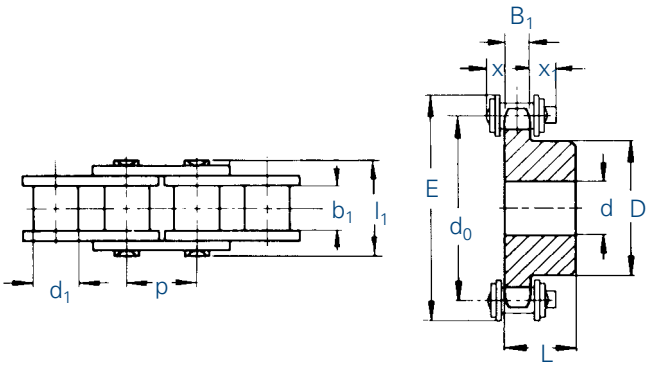

Chain		Pitch	Inner width	Roller Ø	Width over pin	Tooth width	Projection	
		p	b_1 min.	d_1 max.	l_1 max.	B_1	x max.	x_1 max.
No.	Ind.	mm	mm	mm	mm	mm	mm	mm
455 RF		9,525	5,72	6,35	13,5	5,3	4,5	7,8
462 RF		12,7	7,75	8,51	17,0	7,2	5,4	9,3
501 RF		15,875	9,65	10,16	19,6	9,1	5,6	9,7
513 RF		19,05	11,68	12,07	22,7	11,1	6,4	11,0
548 RF		25,4	17,02	15,88	36,1	16,2	10,8	16,2

Number of teeth		455 RF					462 RF					501 RF				
z		d_0	E_{max}	d	D	L	d_0	E_{max}	d	D	L	d_0	E_{max}	d	D	L
No.	Ind.	mm	mm	mm	mm	mm	mm	mm	mm	mm	mm	mm	mm	mm	mm	mm
13		39,79	49	10	28	25	53,06	66	10	37	28	66,32	82	12	47	30
15		45,81	55	10	34	25	61,09	74	10	45	28	76,36	92	12	57	30
17		51,83	61	10	40	28	69,11	82	12	52	28	86,39	102	12	60	30
19		57,87	67	10	45	28	77,16	90	12	60	28	96,45	112	14	70	30
21		63,91	73	12	48	28	85,22	98	14	68	28	106,52	122	16	80	30
23		69,65	79	12	52	28	93,27	106	14	70	28	116,58	132	16	80	30
25		76,00	85	12	57	28	101,33	114	14	70	28	126,66	142	16	80	30

Number of teeth		513 RF					548 RF				
z		d_0	E_{max}	d	D	L	d_0	E_{max}	d	D	L
No.	Ind.	mm	mm	mm	mm	mm	mm	mm	mm	mm	mm
13		79,59	97	16	58	35	106,12	128	16	78	40
15		91,63	109	16	70	35	122,17	144	16	92	40
17		103,67	121	16	80	35	138,22	160	20	100	45
19		115,75	133	16	80	35	154,33	176	20	100	45
21		127,82	145	20	90	40	170,43	192	20	110	50
23		139,90	157	20	90	40	186,54	208	20	110	50
25		152,00	169	20	90	40	202,66	224	20	110	50

Other sprockets made of stainless steel or plastic are available on request.

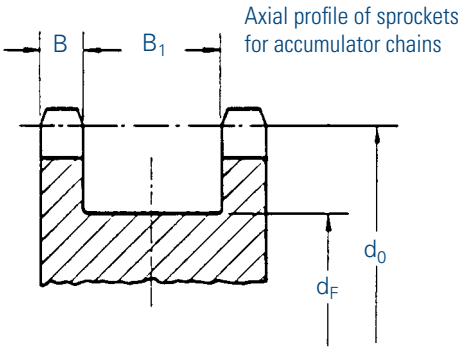

Chain	B_1	B_2
No.	mm	mm
513 SF	10,6	20,80
513 SFK	10,6	20,80
513 SFV	10,6	20,80
Pitch	p	= 19,05
Roller Ø	d_1	= 12,00
Inner width	b_1	= 11,68

Number of teeth z	PCD d_0	Pilot bore Ø	Hub-Ø d_F between sprockets
	mm	mm	mm
15 + 15	91,62	20	61
17 + 17	103,67	20	73
19 + 19	115,73	20	85

Other sprockets made of stainless steel or plastic are available on request.

SPROCKETS FOR HOLLOW PIN CHAINS 01650

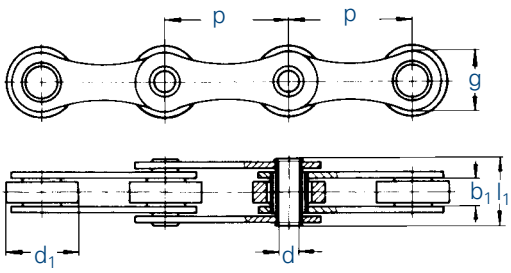

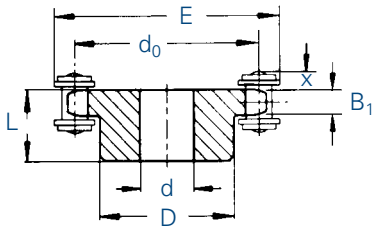

Chain	Pitch	Inner width	Roller Ø	Hollow pin Ø	Width over hollow pin	Plate height	Number of teeth	Sprocket dimensions						
	p	b_1 min.	d_1 max.	d	l_1 max.	g	z	B_1	d_0	d	D	L	E max.	x
No.	mm	mm	mm	mm	mm	mm		mm	mm	mm	mm	mm		mm
01650	50,8	10	30	8,2	27	26	7	9	117,08	20	80	40	148	10
01650	50,8	10	30	8,2	27	26	12	9	196,28	30	110*	50	227	10
01650	50,8	10	30	8,2	27	26	15	9	244,33	30	120*	50	275	10
01650	50,8	10	30	8,2	27	26	18	9	292,55	30	140*	50	323	10

* welded hub

We supply sprockets with custom bore and groove according to specifications.

SPROCKETS WITH INTEGRATED BALL BEARING

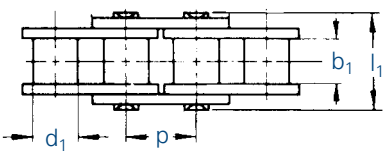

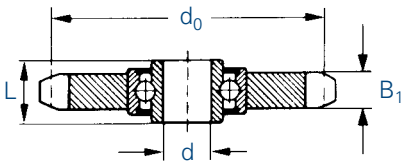

Chain	DIN	Pitch		Inner width	Roller Ø	Width over pin	Jockey sprocket	Number of teeth			Bearing		Load ratings	
		p		b_1 min.	d_1 max.	l_1 max.		z	d_0	B_1	d + 0,3 + 0,1	L	C dyn.	C_V stat.
No.	No.	mm	inch	mm	mm	mm	No.		mm	mm	mm	mm	kN	kN
455	06B-1	9,525	⅜	5,72	6,35	13,5	SPR 455	21	63,91	5,3	16	18,3	7,5	4,5
331	081	12,7	½	3,30	7,75	10,2	SPR 331	18	73,14	3,0	16	18,3	7,5	4,5
332	-	12,7	½	4,88	7,75	11,2	SPR 332	18	73,14	4,5	16	18,3	7,5	4,5
462	08B-1	12,7	½	7,75	8,51	17,0	SPR 462	18	73,14	7,2	16	18,3	7,5	4,5
501	10B-1	15,875	⅝	9,65	10,16	19,6	SPR 501	17	86,39	9,1	16	18,3	7,5	4,5
513	12B-1	19,05	¾	11,68	12,07	22,7	SPR 513	15	91,62	11,1	16	18,3	7,5	4,5
548	16B-1	25,4	1	17,02	15,88	36,1	SPR 548	12	98,14	16,2	20	17,7	10,1	6,3
563	20B-1	31,75	1 ¼	19,56	19,05	43,2	SPR 563	13	132,67	18,5	25	21,0	11,0	7,1

Made of steel with a strength of 500 - 600 N/mm².

In all cases where the chain does not wrap around the sprocket, but only contacts it tangentially, the sprocket must be a lantern gear version, because only one tooth at a time meshes with the chain. Therefore the teeth of the sprocket are tempered to reduce wear. Thus roller chains are frequently used as a rack and pinion arrangement.

Rack and pinion arrangements with chains are inexpensive and easy to assemble. A spring clip connecting link or a connecting link with cottered pin is attached to both ends of a pre-stretched chain with an uneven number of links. By means of the connecting links the chain is then mounted to a clamping device. The chain must be supported over the whole length.

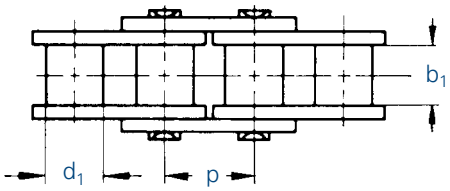

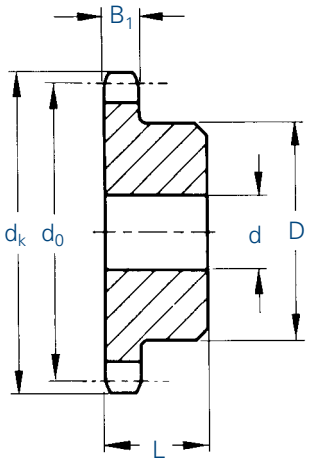

Formula for calculating the PCD:

$$d_0 = \frac{p}{\pi} \cdot z$$

Formula for calculating the permissible torque:

$$M_{max.} = \frac{F_B \ N \cdot \frac{d_0 \ mm}{2}}{10 \cdot 1000} \ Nm$$

Lantern gear	Number of teeth	PCD	Tip circle Ø	Tooth width	Bore	Hub Ø	Hub length	Roller chain	Pitch	Inner width	Roller Ø
	z	d_0 min.	d_k max.	B_1	d max.	D	L		p	b_1 min.	d_1 max.
No.		mm	mm	mm	mm	mm	mm	mm	mm	mm	mm
TRB 15462	15	60,64	69,1	6,3	10	30,5	25	462	12,7	7,75	8,51
TRB 17462	17	68,72	77,2	6,3	12	38,5	25	462	12,7	7,75	8,51
TRB 19462	19	76,81	85,3	6,3	12	46,5	25	462	12,7	7,75	8,51
TRB 21462	21	84,89	93,4	6,3	16	54,5	25	462	12,7	7,75	8,51
TRB 23462	23	92,98	101,4	6,3	16	63,0	25	462	12,7	7,75	8,51
TRB 15501	15	75,80	85,9	8,0	12	45,5	25	501	15,875	9,65	10,16
TRB 17501	17	85,90	96,0	8,0	16	55,5	25	501	15,875	9,65	10,16
TRB 19501	19	96,01	106,1	8,0	16	66,0	25	501	15,875	9,65	10,16
TRB 21501	21	106,12	116,2	8,0	16	76,0	25	501	15,875	9,65	10,16
TRB 23501	23	116,22	126,3	8,0	16	86,0	25	501	15,875	9,65	10,16
TRB 15513	15	90,96	103,0	9,5	16	45,0	35	513	19,05	11,68	12,07
TRB 17513	17	103,08	115,1	9,5	20	57,0	35	513	19,05	11,68	12,07
TRB 19513	19	115,21	127,3	9,5	20	69,0	35	513	19,05	11,68	12,07
TRB 21513	21	127,34	139,4	9,5	20	81,0	35	513	19,05	11,68	12,07
TRB 23513	23	139,47	151,5	9,5	20	93,0	35	513	19,05	11,68	12,07
TRB 15548	15	121,28	137,1	14,0	20	75,0	40	548	25,4	17,02	15,88
TRB 17548	17	137,45	153,3	14,0	20	91,0	40	548	25,4	17,02	15,88
TRB 19548	19	153,62	169,5	14,0	20	107,0	40	548	25,4	17,02	15,88
TRB 21548	21	169,79	185,6	14,0	25	123,0	40	548	25,4	17,02	15,88
TRB 23548	23	185,96	201,8	14,0	25	140,0	40	548	25,4	17,02	15,88

made of steel

Plate thickness = 4 mm
6 mm as of z = 51
8 mm as of z = 46

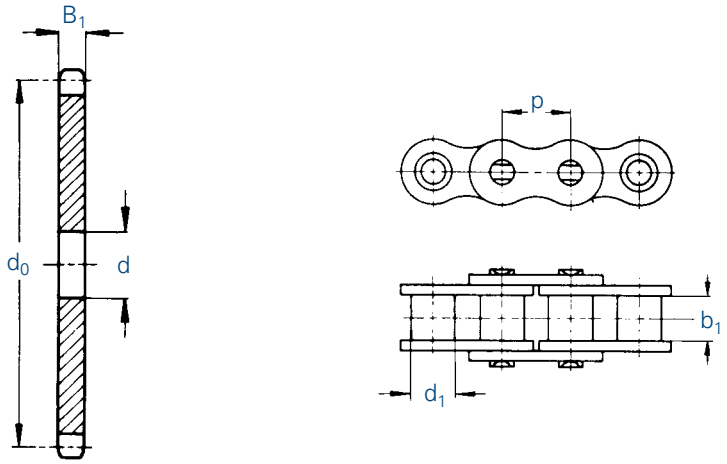

Number of teeth		445 (04)		450 (05 B-1)		455 (06 B-1)	
		p = 6,0 mm b_1 = 2,7 mm d_1 = 4,0 mm B_1 = 2,6 mm		p = 8,0 mm b_1 = 3,0 mm d_1 = 5,0 mm B_1 = 2,8 mm		p = 9,525 mm b_1 = 5,720 mm d_1 = 6,350 mm B_1 = 5,300 mm	
z		d_0	d	d_0	d	d_0	d
	Ind.	mm	mm	mm	mm	mm	mm
11		21,30	6	28,40	8	33,81	8
12		23,18	6	30,91	8	36,80	8
13		25,07	8	33,43	8	39,80	8
14		26,96	8	35,95	8	42,81	8
15		28,86	8	38,48	8	45,81	8
16		30,75	8	41,01	8	48,82	10
17		32,65	8	43,54	8	51,84	10
18		34,55	8	46,07	8	54,85	10
19		36,45	8	48,60	8	57,87	10
20		38,36	8	51,14	8	60,89	10
21		40,26	8	53,68	8	63,91	10
22		42,16	8	56,21	8	66,93	10
23		44,06	8	58,75	8	69,95	10
24		45,97	8	61,29	8	72,97	10
25		47,87	8	63,83	8	76,00	10
26		49,78	8	66,37	10	79,02	10
27		51,68	8	68,91	10	82,05	10
28		53,59	8	71,45	10	85,07	10
29		-	-	73,99	10	88,10	10
30		57,40	8	76,53	10	91,12	10
31		-	-	79,08	10	94,15	12
32		61,21	8	81,62	10	97,18	12
33		63,12	8	84,16	10	100,20	12
34		65,03	8	86,70	10	103,23	12
35		66,93	8	89,25	10	106,26	12
36		68,84	8	91,79	10	109,29	12
37		70,75	8	94,33	10	112,31	12
38		72,65	8	96,88	10	115,34	12
39		-	-	99,42	10	118,37	12
40		76,47	8	101,96	10	121,40	12
45		86,01	10	114,68	12	136,55	16
57		108,92	12	145,22	14	172,91	16
65		124,19	14	165,59	16	197,15	20

made of steel

Plate thickness = 4 mm

331 (081) as of z = 41

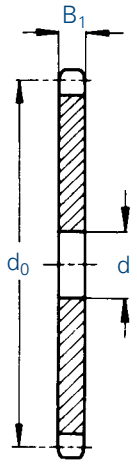

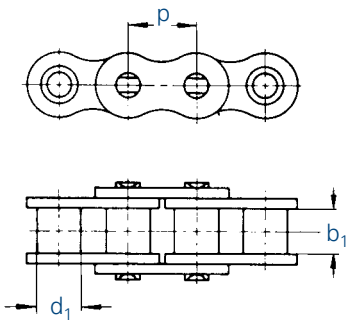

Number of teeth		331 (081) p = 12,70 mm, b_1 = 3,30 mm, d_1 = 7,75 mm, B_1 = 3,00 mm		332 p = 12,70 mm, b_1 = 4,88 mm, d_1 = 7,75 mm, B_1 = 4,50 mm		462 (08 B-1) p = 12,70 mm, b_1 = 7,75 mm, d_1 = 8,51 mm, B_1 = 7,20 mm		501 (10 B-1) p = 15,875 mm, b_1 = 9,650 mm, d_1 = 10,160 mm, B_1 = 9,100 mm	
z		d_0	d	d_0	d	d_0	d	d_0	d
	Ind.	mm	mm	mm	mm	mm	mm	mm	mm
11		45,08	8	45,08	8	45,08	10	56,35	10
12		49,07	8	49,07	8	49,07	10	61,34	10
13		53,07	8	53,07	8	53,07	10	66,34	10
14		57,07	8	57,07	8	57,07	10	71,34	10
15		61,08	8	61,08	8	61,08	10	76,35	10
16		65,10	10	65,10	10	65,10	10	81,37	12
17		69,12	10	69,12	10	69,12	10	86,39	12
18		73,14	10	73,14	10	73,14	10	91,42	12
19		77,16	10	77,16	10	77,16	10	96,45	12
20		81,18	10	81,18	10	81,18	10	101,48	12
21		85,21	10	85,21	10	85,21	12	106,51	12
22		89,24	10	89,24	10	89,24	12	111,55	12
23		93,27	10	93,27	10	93,27	12	116,59	12
24		97,30	10	97,30	10	97,30	12	121,62	12
25		101,33	10	101,33	10	101,33	12	126,66	12
26		105,36	12	105,36	12	105,36	16	131,70	16
27		109,40	12	109,40	12	109,40	16	136,74	16
28		113,43	12	113,43	12	113,43	16	141,79	16
29		-	-	117,46	12	117,46	16	146,83	16
30		121,50	12	121,50	12	121,50	16	151,87	16
31		-	-	125,53	12	125,53	16	156,92	16
32		129,57	12	129,57	12	129,57	16	161,96	16
33		133,61	12	133,61	12	133,61	16	167,01	16
34		137,64	12	137,64	12	137,64	16	172,05	16
35		141,68	12	141,68	12	141,68	16	177,10	16
36		145,72	16	145,72	16	145,72	16	182,14	20
37		149,75	16	149,75	16	149,75	16	187,19	20
38		153,79	16	153,79	16	153,79	16	192,24	20
39		157,83	16	157,83	16	157,83	16	197,29	20
40		161,87	16	161,87	16	161,87	16	202,35	20
45		182,06	16	182,06	16	182,06	20	227,58	20
57		230,54	20	230,54	20	-	-	288,18	25
65		-	-	262,87	20	262,87	25	328,58	25

made of steel

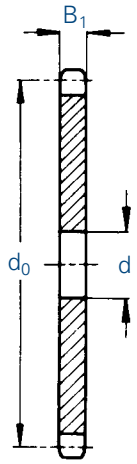

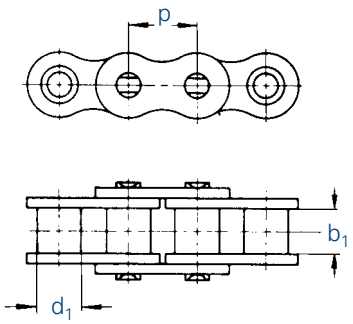

Number of teeth		513 (12 B-1)		548 (16 B-1)		563 (20 B-1)		596 (24 B-1)	
		p = 19,05 mm b_1 = 11,68 mm d_1 = 12,07 mm B_1 = 11,10 mm		p = 25,40 mm b_1 = 17,02 mm d_1 = 15,88 mm B_1 = 16,20 mm		p = 31,75 mm b_1 = 19,56 mm d_1 = 19,05 mm B_1 = 18,50 mm		p = 38,10 mm b_1 = 25,40 mm d_1 = 25,40 mm B_1 = 24,10 mm	
z		d_0	d	d_0	d	d_0	d	d_0	d
	Ind.	mm	mm	mm	mm	mm	mm	mm	mm
11		67,62	14	90,16	15	112,69	16	135,23	20
12		73,60	14	98,14	15	122,67	20	147,21	20
13		79,60	14	106,14	15	132,67	20	159,21	20
14		85,61	14	114,15	15	142,68	20	171,22	20
15		91,62	14	122,17	15	152,71	20	183,25	20
16		97,65	14	130,20	19	162,74	25	195,29	25
17		103,67	14	138,23	19	172,79	25	207,35	25
18		109,71	14	146,27	19	182,84	25	219,41	25
19		115,74	14	154,32	19	192,90	25	231,48	25
20		121,78	14	162,37	19	202,96	25	243,55	25
21		127,82	16	170,42	20	213,03	25	255,63	25
22		133,86	16	178,48	20	223,10	25	267,72	25
23		139,90	16	186,54	20	233,17	25	279,81	25
24		145,95	16	194,60	20	243,25	25	291,90	25
25		151,99	16	202,66	20	253,32	25	303,99	25
26		158,04	16	210,72	20	263,40	25	-	-
27		164,09	16	218,79	20	273,49	25	328,19	30
28		170,14	16	226,86	20	283,57	25	-	-
29		176,20	16	234,93	20	293,66	25	352,39	30
30		182,25	16	243,00	20	303,75	25	364,50	30
31		188,30	20	251,07	25	313,83	25	-	-
32		194,35	20	259,14	25	323,92	25	388,71	30
33		200,41	20	267,21	25	334,01	25	-	-
34		206,46	20	275,29	25	344,11	25	-	-
35		212,52	20	283,36	25	354,20	25	425,04	30
36		218,57	20	291,43	25	364,29	25	-	-
37		224,63	20	299,51	25	374,38	25	-	-
38		230,69	20	307,58	25	384,48	25	461,38	30
39		236,74	20	315,66	25	394,57	25	-	-
40		242,80	20	323,74	25	404,67	25	485,60	30
45		273,09	25	364,12	25	455,16	30	546,19	30
57		345,81	25	461,08	30	576,35	30	691,63	30
65		394,30	25	525,73	30	657,17	30	788,60	40

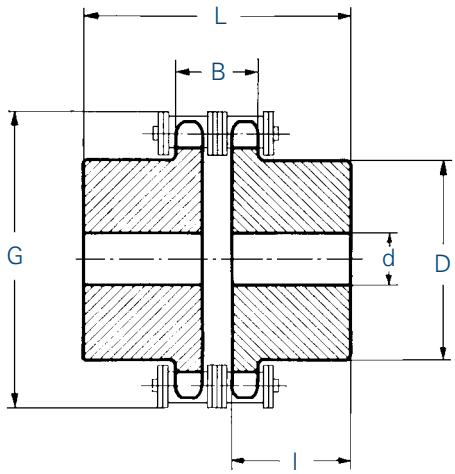

Advantages:

- Elastic torque transmission
- Fast decoupling by simply slackening the chain
- Especially inexpensive.

Example:

A 4-cylinder diesel engine with

P = 110 kW and n = 1400 rpm

is to be coupled to a three-phase alternator - dynamic load factor 1,5.

The calculation is as follows:

$$1{,}5\ \frac{P}{n} = 1{,}5\ \frac{110}{1400} = 0{,}1178$$

Select the coupling according to $\frac{P}{n}$ column (see below):

The coupling next in size is No. 548 18.

Dynamic load factors

Load type of driven machines	Drive machines		
	Electric motors	Internal combustion engines	
		4 cylinders and more	less than 4 cylinders
impact-free	1,0	1,5	2,0
low impact	1,5	2,0	2,5
high impact	2,0	2,5	3,0

Coupling		Torque	Flywheel effect							Required space		Weight
		M_d	mD^2	$\frac{P}{n}$	n max.	d max.	D	l	B	G	L	q max.
No.	Ind.	Nm	kgm²	kW/rpm	rpm	mm	mm	mm	mm	mm	mm	kg/piece
450 18		38	0,000 405	0,0039	8 000	10	38	20	8,2	53,5	43,0	0,41
455 14	*	60	0,000 410	0,0062	6 000	12	33	22	15,2	51,8	49,0	0,41
455 18	*	95	0,001 170	0,0097	6 000	12	45	25	15,2	63,9	55,0	0,78
462 14	*	150	0,001 650	0,0154	5 500	15	44	28	20,7	70,0	63,0	0,93
462 18	*	240	0,004 740	0,0246	5 500	15	60	32	20,7	86,0	71,0	1,83
501 18	*	380	0,013	0,0390	4 500	15	75	35	25,0	107,0	78,0	3,21
513 18	*	600	0,030 100	0,0616	3 000	25	90	40	29,5	126,5	89,5	4,97
513 24	*	940	0,107	0,0965	2 500	25	125	50	29,5	162,5	109,5	10,90
548 18	*	1 480	0,158	0,1519	2 500	30	120	60	46,7	170,0	137,0	12,30
548 24	*	2 350	0,517	0,2413	2 000	30	165	70	46,7	219,0	157,0	27,65
563 22	*	3 700	0,882	0,3798	1 800	40	180	75	53,5	250,0	169,5	37,50
596 18	*	5 800	1,160	0,5954	1 200	50	180	80	70,4	256,0	186,5	43,50
596 24	*	9 200	3,250	0,9445	1 200	50	220	100	70,4	328,0	226,5	78,50
652 22		14 500	7,940	1,4887	1 000	60	260	120	85,6	401,0	272,0	138,00
671 20		23 000	18,710	2,3613	800	75	300	150	105,3	466,0	340,0	231,00

* can also be supplied in maintenance-free Marathon design. In this case please put MA after the number for the coupling, e.g. 462 14 MA

Couplings are supplied unassembled and the loose chain is enclosed.
Other sprockets, number of teeth, chain types and dimensions on request.

For enquiries and orders please supply the following details:
1. Number of couplings
2. Chain pitch
3. Number of teeth
4. Coupling No. or alternatively torque to be transmitted
5. Bores of coupling halves
6. Groove sizes (for keyways also tightening direction); without additional specifications we will supply sprockets on the basis of DIN 6885 sheet 1

Standard sprockets

Standard sprockets can be supplied ex stock with custom bore or bored and grooved "ready-to-install" at extra cost.

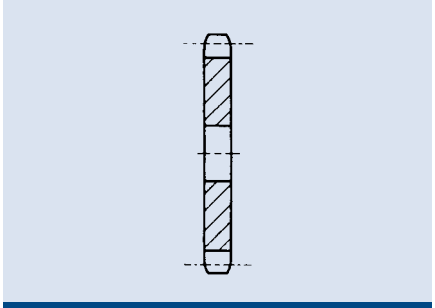

Plate sprockets type "A"

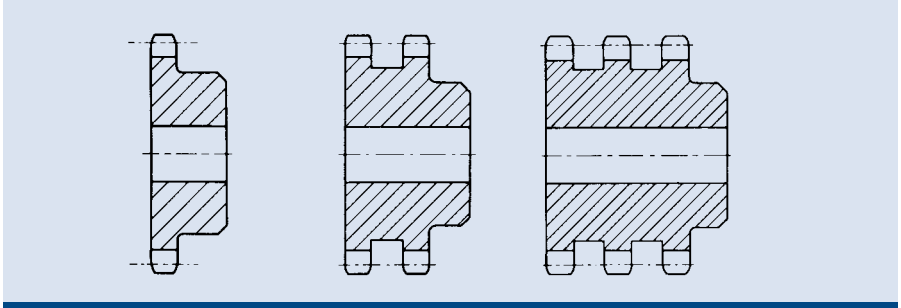

Sprocket with hub on one side type "B"

Sprockets made to specifications

Sprockets can be manufactured to your specifications and drawings.

Sprockets with hub on both sides (type "C") can be symmetrical or asymmetrical. For asymmetrical hub lengths the two hub sections l_1 and l_2 up to the centre of the sprocket must be stated in your order.

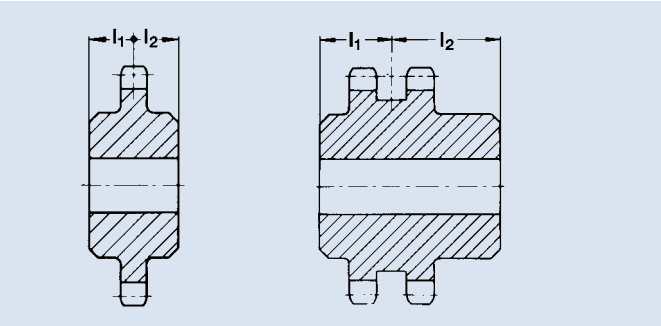

Material grades

For sprockets with a diameter of up to approx. 300 mm unalloyed steel with a steel strength of 500 - 600 N/mm² (S355JOC, C45 and the like) are usually sufficient.
For larger sprockets cast iron suffices in case of normal loads. For drive pinions subjected to high loads with speeds of more than 500 rpm or with chain speeds of more than 1 m/s it is recommended to harden or to harden and temper the teeth to 50 ± 2 HRC.

GROOVE SIZES

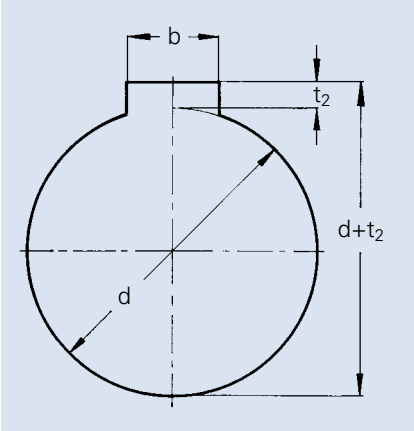

Groove sizes for woodruff keys DIN 6888 are in accordance with: DIN 6885 sheet 1 (with clearance) design A, DIN 6885 sheet 2 design B

We manufacture hub groves only when specifically ordered by our customers. If no further specifications are given, we will work according to DIN 6885 sheet 1.

DIN		Feather keys					Keyways		Hollow keys	Flat keys
		6885 Sheet 1		6885 Sheet 2	6885 Sheet 3		6886	6887	6881/6889	6883/6884
for shaft diameter	Groove width	Groove depth t_2								
d	b	with clearance	with oversize		with clearance	with oversize				
more than 6 to 8	2,0	1,0	0,5	-	-	-	0,5	-	-	-
" 8 " 10	3,0	1,4	0,9	-	-	-	0,9	-	-	-
" 10 " 12	4,0	1,8	1,2	1,1	-	-	1,2	1,2	-	-
" 12 " 17	5,0	2,3	1,7	1,3	1,2	0,8	1,7	1,7	-	-
" 17 " 22	6,0	2,8	2,2	1,7	1,6	1,1	2,2	2,2	-	-
" 22 " 30	8,0	3,3	2,4	1,7	2,0	1,4	2,4	2,4	3,2	3,2
" 30 " 38	10,0	3,3	2,4	2,1	2,4	1,8	2,4	2,4	3,7	3,7
" 38 " 44	12,0	3,3	2,4	2,1	2,2	1,6	2,4	2,4	3,7	3,7
" 44 " 50	14,0	3,8	2,9	2,6	2,1	1,4	2,9	2,9	4,0	4,0
" 50 " 58	16,0	4,3	3,4	2,6	2,4	1,7	3,4	3,4	4,5	4,5
" 58 " 65	18,0	4,4	3,4	3,1	2,3	1,6	3,4	3,4	4,5	4,5
" 65 " 75	20,0	4,9	3,9	4,1	2,7	2,0	3,9	3,9	5,5	5,5
" 75 " 85	22,0	5,4	4,4	4,1	3,1	2,4	4,4	4,4	6,5	6,5
" 85 " 95	25,0	5,4	4,4	4,1	2,9	2,2	4,4	4,4	6,4	6,4
" 95 " 110	28,0	6,4	5,4	5,1	3,2	2,4	5,4	5,4	6,9	6,9
" 110 " 130	32,0	7,4	6,4	5,2	3,5	2,7	6,4	6,4	7,9	7,9
" 130 " 150	36,0	8,4	7,1	6,5	3,8	3,0	7,1	7,1	8,4	8,4
" 150 " 170	40,0	9,4	8,1	8,2	-	-	8,1	8,1	-	9,1
" 170 " 200	45,0	10,4	9,1	-	-	-	9,1	9,1	-	10,4
" 200 " 230	50,0	11,4	10,1	-	-	-	10,1	10,1	-	11,7
" 230 " 260	56,0	12,4	11,1	-	-	-	11,1	11,1	-	-

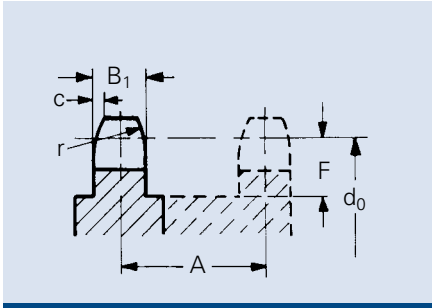

Simplex or 2 x simplex

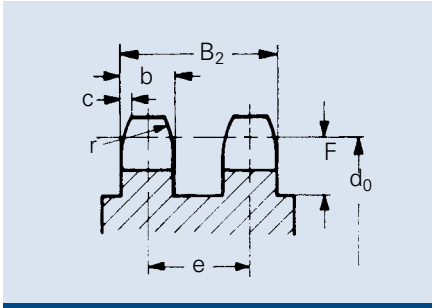

Duplex

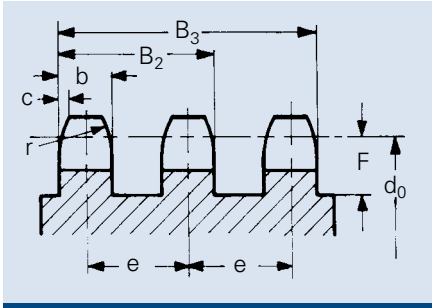

Triplex

B_1 = Tooth width for simplex sprocket
b = Tooth width for multiplex sprocket
B_2 = Tooth width over duplex sprocket
B_3 = Tooth width over triplex sprocket
c = Chamfer of tooth width 0,1 to 0,15 p
r = Tooth chamfer radius ≥ p
e = Transverse pitch
F = Undercut
A = Centre to centre distance for separated chain strands (only for 2 x simplex roller chain, each with outer connecting side)

Roller chains according to DIN 8187 (European type)

Chains	Chain dimensions					Profile dimensions					
	Pitch		Inner width	Roller Ø							
	p		b_1 min.	d_1 h9	e	B_1 h14	b h14	B_2*	B_3*	F min.	A min.
No.	mm	inch	mm	mm	mm	mm	mm	mm	mm	mm	mm
440	5,0	-	2,50	3,20	-	2,3	-	-	-	3,0	9
445, D 445	6,0	-	2,80	4,00	5,50	2,6	2,5	8,0	-	3,5	9
450, D 450, T 450	8,0	-	3,00	5,00	5,64	2,8	2,7	8,3	14,0	5,0	10
453	9,525	⅜	3,30	6,00	-	3,0	-	-	-	6,0	11
454	9,525	⅜	3,94	6,35	-	3,6	-	-	-	6,0	13
455, D 455, T 455	9,525	⅜	5,72	6,35	10,24	5,3	5,2	15,4	25,7	6,0	15
331	12,7	½	3,30	7,75	-	3,0	-	-	-	7,0	12
332, 17	12,7	½	4,88	7,75	-	4,5	-	-	-	7,0	15
110	12,7	½	2,38	7,75	-	2,2	-	-	-	7,0	9
41	12,7	½	6,38	7,75	-	5,9	-	-	-	7,0	16
385	12,7	½	6,40	7,75	-	5,9	-	-	-	8,0	18
461	12,7	½	6,40	8,51	-	5,9	-	-	-	8,0	18
462, D 462, T 462	12,7	½	7,75	8,51	13,92	7,2	7,0	21,0	34,8	8,0	20
500	15,875	⅝	6,48	10,16	-	6,1	-	-	-	10,0	19
501, D 501, T 501	15,875	⅝	9,65	10,16	16,59	9,1	9,0	25,6	42,2	10,0	23
513, D 513, T 513	19,05	¾	11,68	12,07	19,46	11,1	10,8	30,3	49,7	11,0	27
548, D 548, T 548	25,4	1	17,02	15,88	31,88	16,2	15,8	47,7	79,6	15,0	42
552	30,0	-	17,02	15,88	-	16,2	-	-	-	15,0	42
563, D 563, T 563	31,75	1 ¼	19,56	19,05	36,45	18,5	18,2	54,6	91,1	18,0	50
596, D 596, T 596	38,1	1 ½	25,40	25,40	48,36	24,1	23,6	72,0	120,3	23,0	63
613, D 613, T 613	44,45	1 ¾	30,99	27,94	59,56	29,4	28,8	88,4	147,9	25,0	76
652, D 652, T 652	50,8	2	30,99	29,21	58,55	29,4	28,8	87,4	145,9	29,0	79
671, D 671, T 671	63,5	2 ½	38,10	39,37	72,29	36,2	35,4	107,7	180,0	36,0	97
679, D 679, T 679	76,2	3	45,72	48,26	91,21	43,4	42,5	133,7	224,9	43,0	116

Roller chains according to DIN 8188 (American type)

35, 35-2, 35-3	9,525	⅜	4,77	5,08	10,13	4,4	4,3	14,4	24,5	6,0	15
40, 40-2, 40-3	12,7	½	7,85	7,95	14,38	7,4	7,2	21,6	36,0	8,0	20
50, 50-2, 50-3	15,875	⅝	9,40	10,16	18,11	9,0	8,8	26,9	45,0	10,0	25
60, 60 H, 60-2, 60-3	19,05	¾	12,57	11,91	22,78	12,0	11,8	34,6	57,3	12,0	31/33**
80, 80 H, 80-2, 80-3	25,4	1	15,75	15,88	29,29	15,1	14,8	44,1	73,4	16,0	39/42**
100, 100 H, 100-2, 100-3	31,75	1 ¼	18,90	19,05	35,76	18,1	17,7	53,4	89,2	20,0	48/51**
120, 120-2, 120-3	38,1	1 ½	25,22	22,23	45,44	24,1	23,6	69,0	114,5	24,0	60
140, 140-2, 140-3	44,45	1 ¾	25,22	25,40	48,87	24,1	23,6	72,5	121,3	28,0	64
160, 160-2, 160-3	50,8	2	31,55	28,58	58,55	30,1	29,5	88,0	146,6	32,0	77
200, 200-2, 200-3	63,5	2 ½	37,85	39,68	71,55	36,2	35,4	106,9	178,5	40,0	94

* rounded off values ** the second value only applies to chains of type series "H"

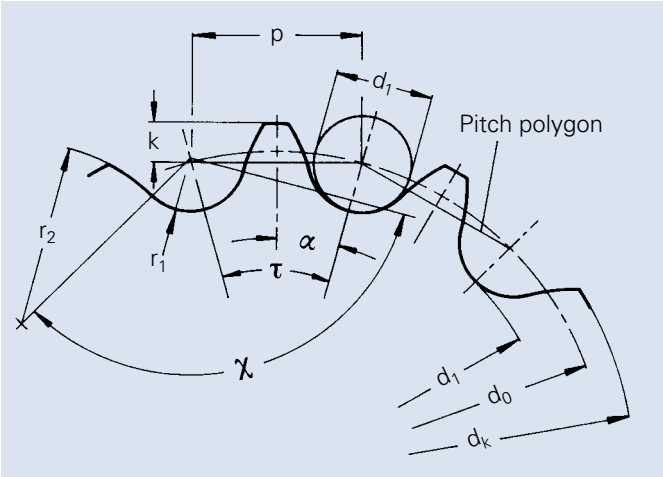

p : Pitch
z : Number of teeth
d_1 : Roller diameter, bushing diameter or pin diameter
d_0 : PCD
d_k : Tip circle diameter
df : Root circle diameter
t : Pitch angel = $\frac{360°}{z}$ $\alpha = \frac{180°}{z}$
x : Roller contact angle
k : Tooth height above pitch polygon
(Diameter of pitch polygon = p cot a)
r_1 : Tooth root radius
r_2 : Tooth profile radius
n : Factor for the number of teeth = $\frac{1}{\sin \alpha} = \frac{1}{\sin (180°/z)}$

PCD

$$d_0 = \frac{p}{\sin \alpha} = \frac{p}{\sin (180°/z)} = pn$$

Tip circle diameter d_k

a) Roller chain sprockets

$$d_k = p \cot \alpha + 0{,}8\, d_1 = d_0 \cos \alpha + 0{,}8\, d_1$$

the following applies with sufficient accuracy:

$d_k = d_0 + 0{,}5 \ldots 0{,}6\, d_1$	z = 6. . . 12 teeth
$d_k = d_0 + 0{,}6 \ldots 0{,}7\, d_1$	z = 13. . . 25 teeth
$d_k = d_0 + 0{,}7 \ldots 0{,}8\, d_1$	z = more than 25 teeth

b) Bush chain sprockets

$$d_k = d_0 + 0{,}8 \ldots 1{,}0\, d_1$$

c) Galle chain sprockets

$$d_k = d_0 + d_1$$

Root circle diameter

$$d_f = d_0 - d_1$$

TOOTHING CHECK

a) by measuring

In order to check the sprocket toothing the root circle diameter must be determined by means of measuring pins with the same diameters as the chain rollers, but with the tolerance $^{+0{,}01}_{0{,}00}$

For an even number of teeth the measure M is:

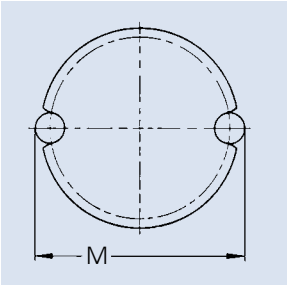

$M = d_0 + d_1$

$M = p\, n + d_1$

For an uneven number of teeth the measure M is:

over 2 measuring pins

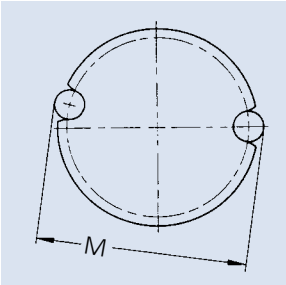

$M = d_0 \cos \frac{\alpha}{2} + d_1$

$M = p\, n \cos \frac{\alpha}{2} + d_1$

over 3 measuring pins

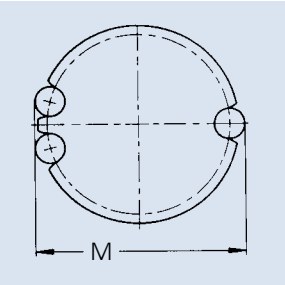

$M = \frac{p}{2} \left(\frac{1}{\sin \alpha} + \cot \alpha \right) + d_1$

$M = \frac{p}{2} \left(n + \cot \alpha \right) + d_1$

b) by means of a chain looped around the sprocket

It must be possible to fully loop the chain around the sprocket quite easily. If the toothing was milled too deeply, the sprocket is defective and must be scrapped! In case of the root circle diameter being too long (i.e. the chain cannot be looped around the sprocket and moves upwards on the tooth flanks after a few links), the sprocket can be milled again.

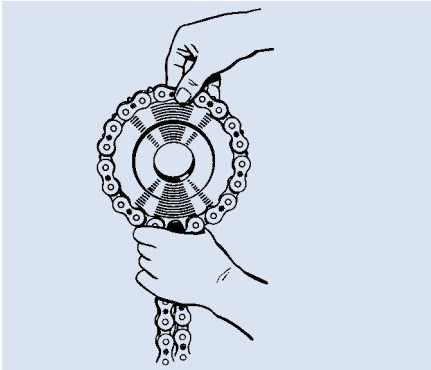

Toothing check by means of a chain looped around the sprocket

For permissible deviations of the measure M the tolerances of the root circle diameter (h_{11}) apply.

z	n	cot α
6	2,0000	1,7321
7	2,3048	2,0765
8	2,6131	2,4142
9	2,9238	2,7475
10	3,2361	3,0777
11	3,5495	3,4057
12	3,8637	3,7321
13	4,1786	4,0572
14	4,4940	4,3813
15	4,8097	4,7046
16	5,1258	5,0273
17	5,4422	5,3495
18	5,7588	5,6713
19	6,0755	5,9927
20	6,3925	6,3138
21	6,7095	6,6346
22	7,0267	6,9552
23	7,3439	7,2755
24	7,6613	7,5958
25	7,9787	7,9158
26	8,2962	8,2357
27	8,6138	8,5555
28	8,9314	8,8752
29	9,2491	9,1948
30	9,5668	9,5144
31	9,8845	9,8338
32	10,2023	10,1532
33	10,5201	10,4725
34	10,8380	10,7917
35	11,1558	11,1109
36	11,4737	11,4300
37	11,7916	11,7492
38	12,1096	12,0682
39	12,4275	12,3872
40	12,7455	12,7062
41	13,0635	13,0251
42	13,3815	13,3441
43	13,6995	13,6630
44	14,0176	13,9818
45	14,3356	14,3007
46	14,6537	14,6195
47	14,9717	14,9383
48	15,2898	15,2571
49	15,6079	15,5758
50	15,9260	15,8945
51	16,2441	16,2133
52	16,5622	16,5320
53	16,8803	16,8507
54	17,1984	17,1693
55	17,5166	17,4880
56	17,8347	17,8066
57	18,1529	18,1253
58	18,4710	18,4439
59	18,7892	18,7625
60	19,1073	19,0811
61	19,4255	19,3997
62	19,7437	19,7183
63	20,0619	20,0369
64	20,3800	20,3555
65	20,6982	20,6740
66	21,0164	20,9926
67	21,3346	21,3111
68	21,6528	21,6297
69	21,9710	21,9482
70	22,2892	22,2667
71	22,6074	22,5853
72	22,9256	22,9038
73	23,2438	23,2223
74	23,5620	23,5408
75	23,8802	23,8593
76	24,1984	24,1778
77	24,5167	24,4963
78	24,8349	24,8147
79	25,1531	25,1332
80	25,4713	25,4517
81	25,7896	25,7702
82	26,1078	26,0886
83	26,4260	26,4071
84	26,7443	26,7256
85	27,0625	27,0440
86	27,3808	27,3625
87	27,6990	27,6809
88	28,0172	27,9994
89	28,3355	28,3178
90	28,6537	28,6363
91	28,9720	28,9547
92	29,2902	29,2731
93	29,6084	29,5916
94	29,9267	29,9100
95	30,2449	30,2284
96	30,5632	30,5468
97	30,8815	30,8653
98	31,1997	31,1837
99	31,5180	31,5021
100	31,8362	31,8205
101	32,1545	32,1389
102	32,4727	32,4573
103	32,7910	32,7758
104	33,1093	33,0942
105	33,4275	33,4126
106	33,7458	33,7310
107	34,0641	34,0494
108	34,3823	34,3678
109	34,7006	34,6862
110	35,0188	35,0046
111	35,3371	35,3229
112	35,6554	35,6414
113	35,9737	35,9598
114	36,2919	36,2781
115	36,6102	36,5965
116	36,9285	36,9150
117	37,2467	37,2333
118	37,5650	37,5517
119	37,8833	37,8701
120	38,2015	38,1884
121	38,5198	38,5068
122	38,8381	38,8252
123	39,1564	39,1436
124	39,4746	39,4620
125	39,7929	39,7804
126	40,1112	40,0987
127	40,4295	40,4171
128	40,7478	40,7355
129	41,0660	41,0538
130	41,3843	41,3722
131	41,7026	41,6906
132	42,0209	42,0090
133	42,3392	42,3273
134	42,6574	42,6457
135	42,9757	42,9641
136	43,2940	43,2825
137	43,6123	43,6008
138	43,9306	43,9192
139	44,2488	44,2375
140	44,5671	44,5559
141	44,8854	44,8743
142	45,2037	45,1926
143	45,5220	45,5110
144	45,8402	45,8293
145	46,1585	46,1477
146	46,4768	46,4661
147	46,7951	46,7844
148	47,1134	47,1028
149	47,4317	47,4212
150	47,7500	47,7395
151	48,0683	48,0579
152	48,3865	48,3762
153	48,7048	48,6946
154	49,0231	49,0129
155	49,3414	49,3313
156	49,6597	49,6496
157	49,9780	49,9680
158	50,2963	50,2863
159	50,6146	50,6047
160	50,9329	50,9230
161	51,2511	51,2414
162	51,5694	51,5597
163	51,8877	51,8781
164	52,2060	52,1964
165	52,5243	52,5148
166	52,8426	52,8332
167	53,1609	53,1515
168	53,4792	53,4699
169	53,7975	53,7883
170	54,1158	54,1066
171	54,4341	54,4249
172	54,7524	54,7433
173	55,0707	55,0617
174	55,3889	55,3799
175	55,7072	55,6982
176	56,0255	56,0166
177	56,3438	56,3349
178	56,6621	56,6533
179	56,9804	56,9716
180	57,2987	57,2900
181	57,6170	57,6083
182	57,9353	57,9266
183	58,2536	58,2451
184	58,5791	58,5633
185	58,8902	58,8817
186	59,2085	59,2001
187	59,5267	59,5184
188	59,8450	59,8367
169	60,1634	60,1551
190	60,4817	60,4735
191	60,7999	60,7917
192	61,1182	61,1100
193	61,4366	61,4285
194	61,7549	61,7468
195	62,0732	62,0652
196	62,3915	62,3835
197	62,7097	62,7019
198	63,0279	63,0201
199	63,3464	63,3385
200	63,6646	63,6567
201	63,9829	63,9750
202	64,3012	64,2935
203	64,6195	64,6118
204	64,9378	64,9301
205	65,2562	65,2484
206	65,5744	65,5668
207	65,8927	65,8852
208	66,2110	66,2034
209	66,5294	66,5217
210	66,8477	66,8403
211	67,1659	67,1584
212	67,4842	67,4768
213	67,8025	67,7952
214	68,1208	68,1134
215	68,4391	68,4318
216	68,7574	68,7501
217	69,0757	69,0684
218	69,3940	69,3868
219	69,7123	69,7051
220	70,0306	70,0235
221	70,3489	70,3418
222	70,6671	70,6605
223	70,9855	70,9784
224	71,3038	71,2968
225	71,6221	71,6151
226	71,9405	71,9336
227	72,2587	72,2518
228	72,5770	72,5701
229	72,8953	72,8884
230	73,2136	73,2067
231	73,5319	73,5251
232	73,8502	73,8434
233	74,1685	74,1617
234	74,4868	74,4801
235	74,8051	74,7984
236	75,1234	75,1167
237	75,4417	75,4351
238	75,7599	75,7534
239	76,0783	76,0717
240	76,3966	76,3900

Chain No.	440		445 D 450		450 D 450 T 450		35 35-2 35-3		453, 454 455 D 455 T 455		17, 18, 41 110, 331 40 40-2 40-3	
Pitch p	5,0		6,0		8,0		9,525		9,525		12,7	
Roller Ø d_1	3,2		4,0		5,0		5,08		6,0 - 6,35		7,75 - 7,95	
Number of teeth	PCD	Tip circle Ø	PCD	Tip circle Ø	PCD	Tip circle Ø	PCD	Tip circle Ø	PCD	Tip circle Ø	PCD	Tip circle Ø
z	d_0	d_k	d_0	d_k	d_0	d_k	d_0	d_k	d_0	d_k	d_0	d_k
11	17,75	19,6	21,30	23,6	28,40	31,2	33,81	36,5	33,81	37,5	45,08	49,6
12	19,32	21,2	23,18	25,6	30,91	33,8	36,80	39,6	36,80	40,6	49,07	53,8
13	20,89	22,8	25,07	27,5	33,43	36,4	39,80	42,7	39,80	43,7	53,07	57,9
14	22,47	24,5	26,96	29,5	35,95	39,0	42,81	45,8	42,81	46,8	57,07	62,0
15	24,05	26,1	28,86	31,4	38,48	41,6	45,81	48,9	45,81	49,9	61,08	66,1
16	25,63	27,7	30,75	33,3	41,01	44,2	48,82	52,0	48,82	53,0	65,10	70,2
17	27,21	29,3	32,65	35,2	43,54	46,8	51,84	55,0	51,84	56,0	69,12	74,3
18	28,79	30,9	34,55	37,2	46,07	49,5	54,85	58,1	54,85	59,1	73,14	78,4
19	30,38	32,5	36,45	39,1	48,60	51,9	57,87	61,2	57,87	62,2	77,16	82,5
20	31,96	34,2	38,36	41,1	51,14	54,5	60,89	64,2	60,89	65,2	81,18	86,6
21	33,55	35,7	40,26	43,0	53,68	57,1	63,91	67,3	63,91	68,3	85,21	90,6
22	35,13	37,3	42,16	44,9	56,21	59,6	66,93	70,3	66,93	71,3	89,24	94,7
23	36,72	38,9	44,06	46,8	58,75	62,2	69,95	73,4	69,95	74,4	93,27	98,8
24	38,31	40,5	45,97	48,8	61,29	64,8	72,97	76,4	72,97	77,4	97,30	102,9
25	39,89	42,2	47,87	50,7	63,83	67,3	76,00	79,5	76,00	80,5	101,33	106,9
26	41,48	43,7	49,78	52,6	66,37	69,9	79,02	82,5	79,02	83,5	105,36	111,0
27	43,07	45,3	51,68	54,5	68,91	72,4	82,05	85,6	82,05	86,6	109,40	115,0
28	44,66	46,9	53,59	56,4	71,45	75,0	85,07	88,6	85,07	89,6	113,43	119,1
29	46,25	48,5	55,49	58,4	73,99	77,5	88,10	91,7	88,10	92,7	117,46	123,2
30	47,83	50,1	57,40	60,3	76,53	80,1	91,12	94,7	91,12	95,7	121,50	127,2
31	49,42	51,7	59,31	62,2	79,08	82,7	94,15	97,8	94,15	98,8	125,53	131,3
32	51,01	53,3	61,21	64,1	81,62	85,7	97,18	100,8	97,18	101,8	129,57	135,3
33	52,60	54,9	63,12	66,0	84,16	87,8	100,20	103,8	100,20	104,8	133,61	139,4
34	54,19	56,5	65,03	67,9	86,70	90,3	103,23	106,9	103,23	107,9	137,64	143,4
35	55,78	58,2	66,93	69,8	89,25	92,9	106,26	109,9	106,26	110,9	141,68	147,5
36	57,37	59,7	68,84	71,8	91,79	95,4	109,29	113,0	109,29	114,0	145,72	151,5
37	58,96	61,3	70,75	73,7	94,33	98,0	112,31	116,0	112,31	117,0	149,75	155,6
38	60,55	62,9	72,66	75,6	96,88	100,5	115,34	119,0	115,34	120,0	153,79	159,6
39	62,14	64,5	74,57	77,5	99,42	103,1	118,37	122,1	118,37	123,1	157,83	163,7
40	63,73	66,1	76,47	79,4	101,96	105,6	121,40	125,1	121,40	126,1	161,87	167,7
41	65,32	67,7	78,38	81,3	104,51	108,2	124,43	128,1	124,43	129,1	165,91	171,8
42	66,91	69,3	80,29	83,2	107,05	110,7	127,46	131,2	127,46	132,2	169,95	175,9
43	68,50	70,9	82,20	85,2	109,60	113,3	130,49	134,2	130,49	135,2	173,98	179,9
44	70,09	72,5	84,11	87,1	112,14	115,8	133,52	137,2	133,52	138,2	178,02	184,0
45	71,68	74,1	86,01	89,0	114,68	118,4	136,55	140,3	136,55	141,3	182,06	188,0
46	73,27	75,7	87,92	90,9	117,23	120,9	139,58	143,3	139,58	144,3	186,10	192,0
47	74,86	77,3	89,83	92,8	119,77	123,5	142,61	146,4	142,61	147,4	190,14	196,1
48	76,45	78,8	91,74	94,7	122,32	126,0	145,64	149,4	145,64	150,4	194,18	200,1
49	78,04	80,4	93,65	96,6	124,86	128,6	148,67	152,4	148,67	153,4	198,22	204,2
50	79,63	82,0	95,56	98,5	127,41	131,1	151,70	155,5	151,70	156,5	202,26	208,2
51	81,22	83,6	97,46	100,5	129,95	133,7	154,73	158,5	154,73	159,5	206,30	212,3
52	82,81	85,2	99,37	102,4	132,50	136,2	157,75	161,5	157,75	162,5	210,34	216,3
53	84,40	86,8	101,28	104,3	135,04	138,8	160,78	164,5	160,78	165,6	214,38	220,4
54	85,99	88,4	103,19	106,2	137,59	141,3	163,81	167,6	163,81	168,6	218,42	224,4
55	87,58	90,0	105,10	108,1	140,13	143,9	166,85	170,6	166,85	171,6	222,46	228,5
56	89,17	91,6	107,01	110,0	142,68	146,4	169,88	173,7	169,88	174,7	226,50	232,5
57	90,76	93,2	108,92	111,9	145,22	149,0	172,91	176,7	172,91	177,7	230,54	236,6
58	92,36	94,8	110,83	113,8	147,77	151,5	175,94	179,8	175,94	180,8	234,58	240,6
59	93,95	96,4	112,74	115,8	150,31	154,1	178,97	182,8	178,97	183,8	238,62	244,7
60	95,54	98,0	114,64	117,7	152,86	156,7	182,00	185,8	182,00	186,8	242,66	248,7
61	97,13	99,6	116,55	119,6	155,40	159,2	185,03	188,9	185,03	189,9	246,70	252,8
62	98,72	101,2	118,46	121,5	157,95	161,7	188,06	191,9	188,06	192,9	250,74	256,8
63	100,31	102,7	120,37	123,4	160,50	164,3	191,09	194,9	191,09	195,9	254,79	260,9
64	101,90	104,3	122,28	125,3	163,04	166,8	194,12	198,0	194,12	199,0	258,83	264,9
65	103,49	105,9	124,19	127,2	165,59	169,4	197,15	201,0	197,15	202,0	262,87	268,9
66	105,08	107,5	126,10	129,1	168,13	171,9	200,18	204,0	200,18	205,0	266,91	273,0
67	106,67	109,1	128,01	131,0	170,68	174,5	203,21	207,1	203,21	208,1	270,95	277,0
68	108,26	110,7	129,92	132,9	173,22	177,0	206,24	210,1	206,24	211,1	274,99	281,1
69	109,86	112,3	131,83	134,9	175,77	179,6	209,27	213,1	209,27	214,1	279,03	285,1
70	111,45	113,9	133,74	136,8	178,31	182,1	212,30	216,2	212,30	217,2	283,07	289,2

All dimensions in mm

Chain No.	460 461 462 D 462 T 462		50 H 50 HX 50 50-2 50-3	500 501 501 501	60 60-2 60-3 60 H 60 HX	513 D 513 T 513 515 517	80 H 80 HX 80 80-2 80-3	548 D 548 T 548	100 HX 100 100-2 100-3	563 D 563 T 563	120 HX 120 120-2 120-3	
Pitch p	12,7		15,875		19,05		25,4		31,75		38,1	
Roller Ø d_1	8,51		10,16		11,91 - 12,07		15,88		19,05		22,23	
Number of teeth z	PCD d_0	Tip circle Ø d_k	PCD d_0	Tip circle Ø d_k	PCD d_0	Tip circle Ø d_k	PCD d_0	Tip circle Ø d_k	PCD d_0	Tip circle Ø d_k	PCD d_0	Tip circle Ø d_k
11	45,08	50,0	56,35	62,2	67,62	74,5	90,16	99,2	112,69	123,4	135,23	147,6
12	49,07	54,2	61,34	67,4	73,60	80,7	98,14	107,5	122,67	133,7	147,21	160,0
13	53,07	58,3	66,34	72,5	79,60	86,9	106,14	115,7	132,67	144,0	159,21	172,4
14	57,07	62,4	71,34	77,7	85,61	93,1	114,15	124,0	142,68	154,3	171,22	184,7
15	61,08	66,5	76,35	82,8	91,62	99,2	122,17	132,2	152,71	164,6	183,25	197,0
16	65,10	70,6	81,37	87,9	97,65	105,4	130,20	140,4	162,74	174,9	195,29	209,3
17	69,12	74,7	86,39	93,0	103,67	111,5	138,23	148,5	172,79	185,1	207,35	221,6
18	73,14	78,8	91,42	98,1	109,71	117,7	146,27	156,7	182,84	195,3	219,41	233,9
19	77,16	82,9	96,45	103,2	115,74	123,8	154,32	164,9	192,90	205,5	231,48	246,1
20	81,18	87,0	101,48	108,3	121,78	129,9	162,37	173,0	202,96	215,7	243,55	258,4
21	85,21	91,0	106,51	113,4	127,82	136,0	170,42	181,2	213,03	225,9	255,63	270,6
22	89,24	95,1	111,55	118,5	133,86	142,1	178,48	189,3	223,10	236,1	267,72	282,8
23	93,27	99,2	116,59	123,6	139,90	148,2	186,54	197,5	233,17	246,2	279,81	295,0
24	97,30	103,3	121,62	128,7	145,95	154,3	194,60	205,6	243,25	256,4	291,90	307,2
25	101,33	107,3	126,66	133,8	151,99	160,4	202,66	213,7	253,32	266,6	303,99	319,4
26	105,36	111,4	131,70	138,8	158,04	166,5	210,72	221,9	263,40	276,7	316,09	331,6
27	109,40	115,4	136,74	143,9	164,09	172,6	218,79	230,0	273,49	286,9	328,19	343,8
28	113,43	119,5	141,79	149,0	170,14	178,7	226,86	238,1	283,57	297,0	340,29	355,9
29	117,46	123,6	146,83	154,1	176,20	184,8	234,93	246,2	293,66	307,2	352,39	368,1
30	121,50	127,6	151,87	159,1	182,25	190,9	243,00	254,3	303,75	317,3	364,50	380,3
31	125,53	131,7	156,92	164,2	188,30	197,0	251,07	262,5	313,83	327,5	376,60	392,5
32	129,57	135,7	161,96	169,3	194,35	203,0	259,14	270,6	323,92	337,6	388,71	404,6
33	133,61	139,8	167,01	174,4	200,41	209,1	267,21	278,7	334,01	347,7	400,82	416,8
34	137,64	143,8	172,05	179,4	206,46	215,2	275,29	286,8	344,11	357,9	412,93	428,9
35	141,68	147,9	177,10	184,5	212,52	221,3	283,36	294,9	354,20	368,0	425,04	441,1
36	145,72	152,0	182,14	189,6	218,57	227,4	291,43	303,0	364,29	378,1	437,15	453,3
37	149,75	156,0	187,19	194,6	224,63	233,5	299,51	311,1	374,38	388,3	449,26	465,4
38	153,79	160,1	192,24	199,7	230,69	239,5	307,58	319,2	384,48	398,4	461,38	477,6
39	157,83	164,1	197,29	204,8	236,74	245,6	315,66	327,3	394,57	408,5	473,49	489,8
40	161,87	168,2	202,35	209,8	242,80	251,7	323,74	335,4	404,67	418,7	485,60	501,9
41	165,91	172,2	207,38	214,9	248,86	257,8	331,81	343,5	414,77	428,8	497,72	514,1
42	169,95	176,3	212,43	219,9	254,92	263,8	339,89	351,6	424,86	438,9	509,84	526,2
43	173,98	180,3	217,48	225,0	260,98	269,9	347,97	359,7	434,96	449,0	521,95	538,4
44	178,02	184,4	222,53	230,1	267,04	276,0	356,05	367,8	445,06	459,2	534,07	551,5
45	182,06	188,4	227,58	235,1	273,09	282,0	364,12	375,9	455,16	469,3	546,19	562,6
46	186,10	192,5	232,63	240,2	279,15	288,1	372,20	384,0	465,25	479,4	558,31	574,8
47	190,14	196,5	237,68	245,3	285,21	294,2	380,28	392,1	475,35	489,5	570,42	586,9
48	194,18	200,6	242,73	250,3	291,27	300,3	388,36	400,2	485,45	499,6	582,54	599,1
49	198,22	204,6	247,78	255,4	297,33	306,4	396,44	408,3	495,55	509,8	594,66	611,2
50	202,26	208,6	252,83	260,4	303,39	312,4	404,52	416,4	505,65	519,9	606,78	623,4
51	206,30	212,7	257,88	265,5	309,45	318,5	412,60	424,5	515,75	530,0	618,90	635,5
52	210,34	216,7	262,93	270,6	315,51	324,6	420,68	432,6	525,85	540,1	631,02	647,8
53	214,38	220,8	267,97	275,6	321,57	330,6	428,76	440,7	535,95	550,2	643,14	659,8
54	218,42	224,8	273,02	280,7	327,63	336,7	436,84	448,8	546,05	560,4	655,26	671,9
55	222,46	228,9	278,08	285,7	333,69	342,8	444,92	456,9	556,15	570,5	667,38	684,1
56	226,50	232,9	283,13	290,8	339,75	348,8	453,00	465,0	566,25	580,6	679,50	696,2
57	230,54	237,0	288,18	295,8	345,81	354,9	461,08	473,1	576,35	590,7	691,63	708,4
58	234,58	241,0	293,23	300,9	351,87	361,0	469,16	481,2	586,45	600,8	703,75	720,5
59	238,62	245,1	298,28	306,0	357,93	367,0	477,24	489,2	596,56	610,9	715,87	732,6
60	242,66	249,1	303,33	311,0	363,99	373,1	485,33	497,3	606,66	621,0	727,99	744,8
61	246,70	253,2	308,38	316,1	370,06	379,2	493,41	505,4	616,76	631,1	740,11	756,9
62	250,74	257,2	313,43	321,1	376,12	385,3	501,49	513,5	626,86	641,3	752,23	769,1
63	254,79	261,3	318,48	326,2	382,18	391,3	509,57	521,6	636,97	651,4	764,36	781,2
64	258,83	265,3	323,53	331,2	388,24	397,4	517,65	529,7	647,07	661,5	776,48	793,3
65	262,87	269,4	328,58	336,3	394,30	403,5	525,73	537,8	657,17	671,6	788,60	805,5
66	266,91	273,4	333,64	341,4	400,36	409,5	533,82	545,9	667,27	681,7	800,72	817,6
67	270,95	277,4	338,69	346,4	406,42	415,6	541,90	554,0	677,37	691,9	812,85	829,8
68	274,99	281,5	343,74	351,5	412,49	421,7	549,98	562,1	687,48	701,9	824,97	841,9
69	279,03	285,5	348,79	356,5	418,55	427,7	558,06	570,2	697,58	712,0	837,10	854,0
70	283,07	289,6	353,84	361,6	424,61	433,8	566,15	578,2	707,68	722,2	849,22	866,1

All dimensions in mm

Chain No.	596 R 596 SX 596 D 596 T 596		140 HX 140 140-2 140-3		613 D 613 T 613		160 HX 160 160-2 160-3	652 D 652 T 652	200 HX 200 200-2 200-3	671 SX D 671 T 671	679 D 679 T 679	
Pitch p	38,1		44,45		44,45		50,8		63,5		76,2	
Roller Ø d_1	25,4		25,4		27,94		28,58 - 29,21		39,37 - 39,68		48,26	
Number of teeth z	PCD d_0	Tip circle Ø d_k	PCD d_0	Tip circle Ø d_k	PCD d_0	Tip circle Ø d_k	PCD d_0	Tip circle Ø d_k	PCD d_0	Tip circle Ø d_k	PCD d_0	Tip circle Ø d_k
11	135,23	150,0	157,77	171,8	157,77	173,8	180,31	196,4	225,39	248,1	270,47	298,1
12	147,21	162,5	171,74	186,3	171,74	188,3	196,28	213,0	245,35	268,8	294,41	323,0
13	159,21	174,9	185,74	200,7	185,74	202,7	212,27	229,5	265,34	289,4	318,41	347,7
14	171,22	187,2	199,76	215,1	199,76	217,1	228,30	246,0	285,37	310,0	342,44	372,5
15	183,25	199,5	213,79	229,5	213,79	231,5	244,33	262,4	305,42	330,5	366,50	397,1
16	195,29	211,8	227,84	243,9	227,84	245,9	260,39	278,8	325,49	351,0	390,59	421,7
17	207,35	224,1	241,91	258,2	241,91	260,2	276,46	295,2	345,58	371,5	414,70	446,2
18	219,41	236,3	255,98	272,5	255,98	274,5	292,55	311,5	365,68	391,9	438,82	470,7
19	231,48	248,6	270,06	286,8	270,06	288,8	308,64	327,8	385,79	412,3	462,95	495,2
20	243,55	260,9	284,15	301,0	284,15	303,0	324,74	344,1	405,92	432,7	487,11	519,7
21	255,63	273,1	298,24	315,3	298,24	317,3	340,84	360,4	426,05	453,1	511,26	544,2
22	267,72	285,3	312,34	329,6	312,34	331,6	356,96	376,7	446,20	473,5	535,44	568,6
23	279,81	297,5	326,44	343,8	326,44	345,8	373,07	393,0	466,34	493,8	559,61	593,0
24	291,90	309,7	340,55	358,0	340,55	360,0	389,19	409,3	486,49	514,1	583,79	617,4
25	303,99	321,9	354,65	372,3	354,65	374,3	405,32	425,5	506,65	534,5	607,98	641,8
26	316,09	334,1	368,77	386,5	368,77	388,5	421,45	441,8	526,81	554,8	632,17	666,2
27	328,19	346,2	382,88	400,7	382,88	402,7	437,58	458,0	546,98	575,1	656,37	690,5
28	340,29	358,4	397,00	414,9	397,00	416,9	453,72	474,3	567,14	595,4	680,57	714,9
29	352,39	370,6	411,12	429,1	411,12	431,1	469,85	490,5	587,32	615,7	704,78	739,2
30	364,50	382,8	425,24	443,3	425,24	445,3	485,99	506,7	607,49	636,0	728,99	763,6
31	376,60	395,0	439,37	457,5	439,37	459,5	502,13	523,0	627,67	656,2	753,20	787,9
32	388,71	407,1	453,49	471,7	453,49	473,7	518,28	539,2	647,85	676,5	777,42	812,3
33	400,82	419,3	467,62	485,8	467,62	487,9	534,42	555,4	668,03	696,8	801,63	836,6
34	412,93	431,4	481,75	500,1	481,75	502,1	550,57	571,6	688,21	717,1	825,86	860,9
35	425,04	443,6	495,88	514,3	495,88	516,3	566,72	587,8	708,39	737,3	850,07	885,3
36	437,15	455,8	510,01	528,5	510,01	530,5	582,86	604,0	728,58	757,6	874,30	909,6
37	449,26	467,9	524,14	542,7	524,14	544,7	599,01	620,3	748,77	777,9	898,52	933,9
38	461,38	480,1	538,27	556,8	538,27	558,8	615,17	636,5	768,96	798,1	922,75	958,2
39	473,49	492,2	552,40	571,0	552,40	573,0	631,32	652,7	789,15	818,4	946,98	982,5
40	485,60	504,4	566,54	585,2	566,54	587,2	647,47	668,9	809,34	838,6	971,21	1007
41	497,72	516,6	580,67	599,4	580,67	601,4	663,63	685,1	829,53	858,9	995,44	1031
42	509,84	528,7	594,81	613,5	594,81	615,5	679,78	701,3	849,73	879,2	1019,67	1055
43	521,95	540,9	608,94	627,7	608,94	629,7	695,93	717,5	869,92	899,4	1043,90	1080
44	534,07	553,0	623,08	641,9	623,08	643,9	712,09	733,7	890,12	919,6	1068,14	1104
45	546,19	565,1	637,22	656,1	637,22	658,1	728,25	749,9	910,31	939,9	1092,37	1128
46	558,31	577,3	651,36	670,2	651,36	672,2	744,41	766,1	930,51	960,1	1116,61	1153
47	570,42	589,4	665,49	684,4	665,49	686,4	760,56	782,3	950,70	980,4	1140,84	1177
48	582,54	601,6	679,63	698,6	679,63	700,6	776,72	798,5	970,90	1000	1165,08	1201
49	594,66	613,7	693,77	712,7	693,77	714,7	792,88	814,7	991,10	1021	1189,32	1226
50	606,78	625,9	707,91	726,9	707,91	728,9	809,04	830,8	1011,30	1041	1213,56	1250
51	618,90	638,0	722,05	741,1	722,05	743,1	825,20	847,0	1031,50	1061	1237,80	1274
52	631,02	650,2	736,19	755,2	736,19	757,2	841,36	863,2	1051,70	1082	1262,04	1298
53	643,14	662,3	750,33	769,4	750,33	771,4	857,52	879,4	1071,90	1102	1286,28	1323
54	655,26	674,4	764,47	783,6	764,47	785,6	873,68	895,6	1092,10	1122	1310,52	1347
55	667,38	686,6	778,61	797,7	778,61	799,7	889,84	911,8	1112,30	1142	1334,76	1371
56	679,50	698,7	792,75	811,9	792,75	813,9	906,00	928,0	1132,50	1163	1359,00	1395
57	691,63	710,9	806,90	826,1	806,90	828,1	922,17	944,2	1152,71	1183	1383,25	1420
58	703,75	723,0	821,04	840,2	821,04	842,2	938,33	960,4	1172,91	1203	1407,49	1444
59	715,87	735,1	835,18	854,4	835,18	856,4	954,49	976,5	1193,11	1223	1431,74	1468
60	727,99	747,3	849,32	868,5	849,32	870,5	970,65	992,7	1213,31	1243	1455,98	1493
61	740,11	759,4	863,46	882,7	863,46	884,7	986,82	1009	1233,52	1264	1480,22	1517
62	752,23	771,6	877,61	896,9	877,61	898,9	1002,97	1025	1253,72	1284	1504,46	1541
63	764,36	783,7	891,75	911,0	891,75	913,0	1019,14	1041	1273,93	1304	1528,72	1565
64	776,48	795,8	905,89	925,2	905,89	927,2	1035,30	1057	1294,13	1324	1552,96	1590
65	788,60	808,0	920,03	939,4	920,03	941,4	1051,47	1074	1314,34	1345	1577,20	1614
66	800,72	820,1	934,18	953,5	934,18	955,5	1067,63	1090	1334,54	1365	1601,45	1638
67	812,85	832,3	948,32	967,7	948,32	969,7	1083,80	1106	1354,75	1385	1625,70	1663
68	824,97	844,4	962,47	981,8	962,47	983,8	1099,96	1122	1374,95	1405	1649,94	1687
69	837,10	856,5	976,61	996,0	976,61	998,0	1116,13	1138	1395,16	1425	1674,19	1711
70	849,22	868,6	990,75	1010,0	990,75	1012,0	1132,29	1155	1415,36	1445	1698,44	1735

All dimensions in mm

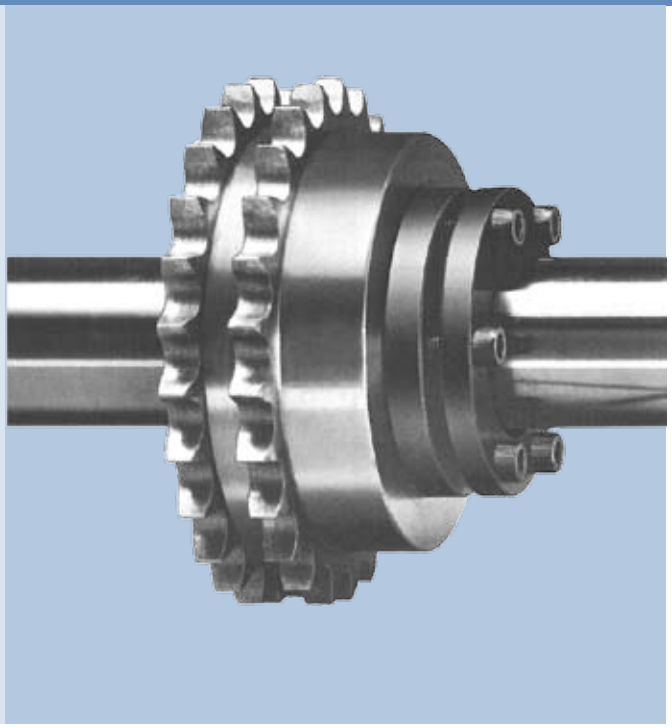

The ETP shaft bushing is a high-quality clamping element, which mounts components such as sprockets, toothed wheels, levers and other machine parts fast, easily and permanently onto shafts. Grooves, tapers and inside threads are no longer necessary.
Simply slide bushing and hub onto the shaft and tighten the few clamping screws. The only required tool is a simple hexagon wrench. However, a small torque wrench (up to 32 Nm) would be absolutely perfect. The transmissible torques easily exceed the allowable values of the shaft torsional stresses.

Here is an example for a shaft diameter of 40 mm with a feather key connection:

a) Shaft material St 60 M_d approx. 230 Nm
b) Shaft material 42 CrMo4 M_d approx. 310 Nm

The ETP bushing transmits 800 Nm (at 20° Centigrade). Since it is not necessary to mill grooves into the shaft, the shaft diameter can be reduced by max. 25 % (2 x groove depth), i.e. a shaft with a diameter of 30 mm fitted with the proper bushing transmits at least 340 Nm.

This means more efficiency due to:

1. Material savings
2. Lower dimensioning of other components, particularly bearings.

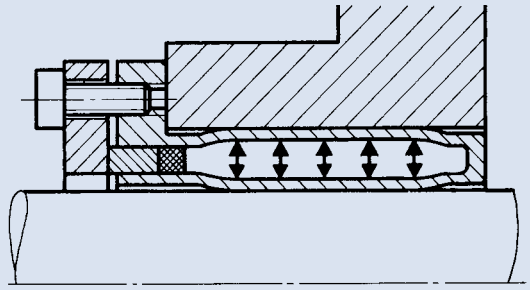

Bushing after tightening of clamping screws

Fine adjustments are possible. Adjusting the transmission elements is never a problem. The bushings are subsequently radially and axially adjustable to change positions without difficulty and backlash-free.

The ETP bushing is easy to repair. There will be no frictional corrosion since micro-movements are prevented due to the solid connection. The bushing can always be re-used, e.g. it can easily be mounted to a new sprocket. Subsequent machining on the old shaft will not be necessary.

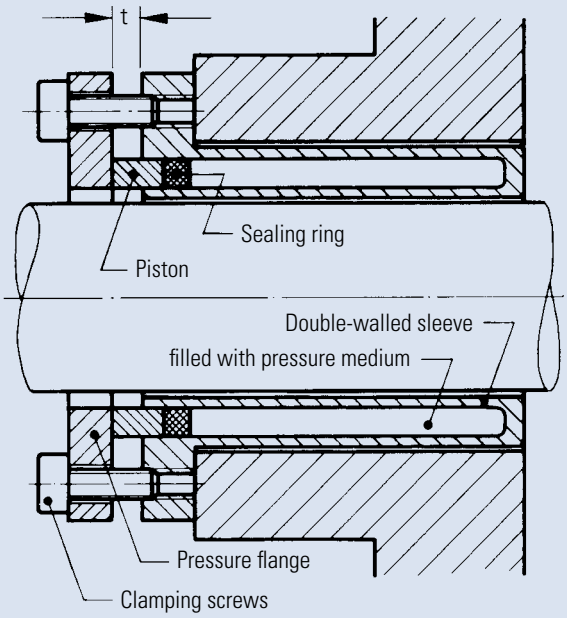

The ETP bushing consists of five parts: double-walled sleeve filled with pressure medium, sealing ring, piston, pressure flange and clamping screws (3, 4, 6 or 8 screws).

When the screws are being tightened, the piston forces the pressure medium in the double-walled sleeve against the walls. After tightening the screws with the required clamping torque M_{anz}, almost the entire bushing lies against shaft and hub. Thus the shaft and the respective part it is to be connected to are friction-locked. The pressure medium is resistant to material fatigue, and the clamping force of the bushing will persist. A 100 mm ETP bushing will then be non-slip up to a static moment of at least 12,500 Nm. The maximum working temperature is 85° Centigrade.

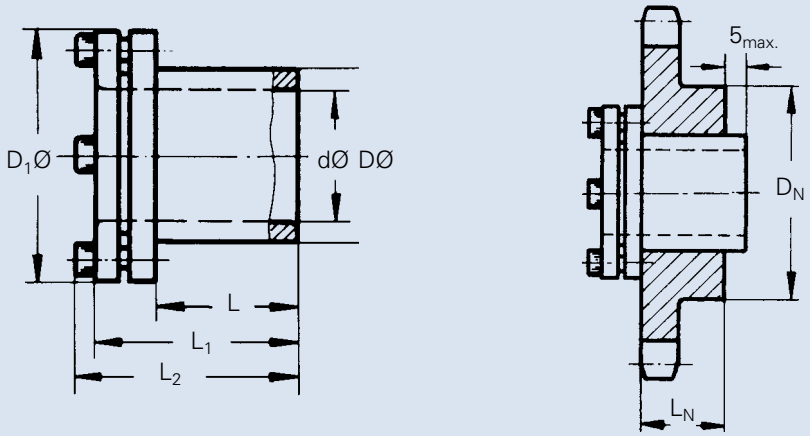

	d	D	D_1	L	L_1	L_2	M_N	F_N	Clamping screws			Weight	Hub Ø D_N min.		Hub length L_N
							at 20°C		Number	Thread	$M_{anz.}$		Steel	Cast iron	
Order number	mm	mm	mm	mm	mm	mm	Nm	kN			Nm	kg	mm	mm	mm
ETP-15/23-17	15	23	36	17	28	32	43	5,7	3	M4	4,5	0,11	35	46	12
ETP-19/28-21	19	28	45	21	34	39	88	9,3	3	M5	7	0,18	42	56	16
ETP-20/28-22	20	28	45	22	40	45	125	13,0	3	M5	8	0,18	42	56	22
ETP-22/32-22	22	32	49	22	35	40	135	11,6	3	M5	8	0,21	48	64	17
ETP-24/34-25	24	34	49	25	38	43	175	14,4	4	M5	8	0,22	51	68	20
ETP-25/34-27	25	34	49	27	41	46	195	16,2	4	M5	8	0,22	51	68	22
ETP-28/39-29	28	39	55	29	43	48	280	19,5	4	M5	8	0,28	59	78	24
ETP-30/41-32	30	41	57	32	46	51	340	23,1	4	M5	8	0,30	62	82	27
ETP-32/43-34	32	43	60	34	50	55	410	26,1	4	M5	8	0,34	65	86	29
ETP-35/47-37	35	47	63	37	53	58	540	31,1	6	M5	8	0,40	71	94	32
ETP-38/50-41	38	50	65	41	57	62	700	37,4	6	M5	8	0,46	75	100	36
ETP-40/53-43	40	53	70	43	60	65	800	41,3	6	M5	8	0,58	80	106	38
ETP-42/55-45	42	55	70	45	62	67	940	45,4	6	M5	8	0,60	83	110	40
ETP-45/59-49	45	59	77	49	66	72	1180	53,0	6	M6	13	0,75	89	118	44
ETP-48/62-52	48	62	80	52	70	76	1370	59,9	6	M6	13	0,80	93	124	47
ETP-50/65-53	50	65	83	53	72	78	1620	64,8	6	M6	13	0,93	98	130	48
ETP-55/71-58	55	71	88	58	77	83	2110	77,9	8	M6	13	1,10	107	142	53
ETP-60/77-64	60	77	95	64	85	91	2750	93,6	8	M6	13	1,40	116	154	59
ETP-65/84-68	65	84	102	68	90	96	3430	108	8	M6	13	1,73	126	168	63
ETP-70/90-72	70	90	113	72	94	100	4300	124	6	M8	32	1,90	135	180	67
ETP-75/95-85	75	95	118	85	108	114	5300	153	6	M8	32	2,25	143	190	80
ETP-80/100-90	80	100	123	90	114	122	6400	173	6	M8	32	2,62	150	200	85
ETP-85/106-95	85	106	129	95	119	127	7700	194	6	M8	32	3,00	159	212	90
ETP-90/112-100	90	112	135	100	127	135	9100	216	8	M8	32	3,56	168	224	95
ETP-95/120-105	95	120	143	105	132	140	10700	239	8	M8	32	4,39	180	240	100
ETP-100/125-110	100	125	148	110	139	147	12500	264	8	M8	32	4,81	188	250	105

Dimensions, technical specifications and other details were correct at the time of printing, but are subject to change. M_{anz} is the clamping torque of the clamping screws to reach M_N or F_N. F_N is the transmissible axial force at a torque of 0. M_N is the transmissible torque at an axial force of 0.

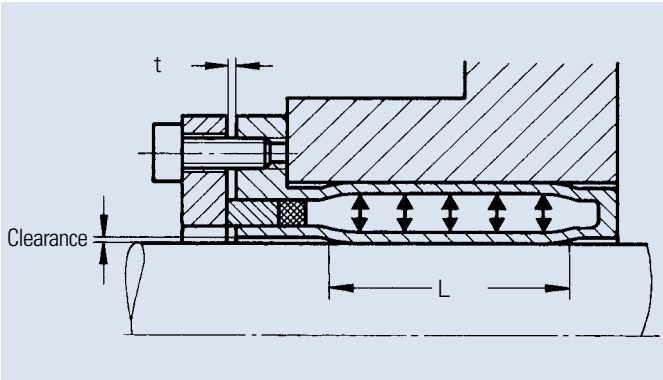

Fit tolerances

ETP bushings have been designed for the following fit tolerances:

Shafts Ø h8 – k6 (except 15 mm ø: h7), hub bore hole H7. Permissible roughness depth: R_a max = 3 / R_a min. = 1 [µm].

Please note: the torque transmission (M) is influenced in a negative way, if the tolerance zone of the bushing connection does not comply with the recommended values. The distance (t) will diminish with increasing clearance. In case of exceedingly high tolerances the pressure flange will connect to the sleeve without the surface pressure required for the torque transmission being reached.

Hub dimensioning

Depending on the material used, the pressure reached at the maximum clamping torque requires a minimum wall thickness of the hub as well as a minimum hub length (see table).

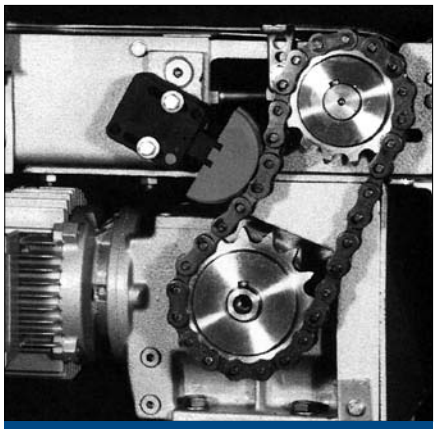

SPANN-BOX® size 0

Not only correct lubrication and wheel alignment, but also chain re-tensioning to compensate for elongation is of crucial importance for a satisfactory life cycle of a chain drive.

Apart from chain tension wheels, our chain tensioners SPANN-BOY® and SPANN-BOX® offer perfect solutions.Due to different sizes and profiles they cover almost all application areas.

For controlling purposes SPANN-BOY® and SPANN-BOX® can be fitted with limit or proximity switches.

We can also supply SPANN-BOY® and SPANN-BOX® with casings or springs made of stainless steel.

SPANN-BOY®

SPANN-BOX® size 1
with deflecting profile

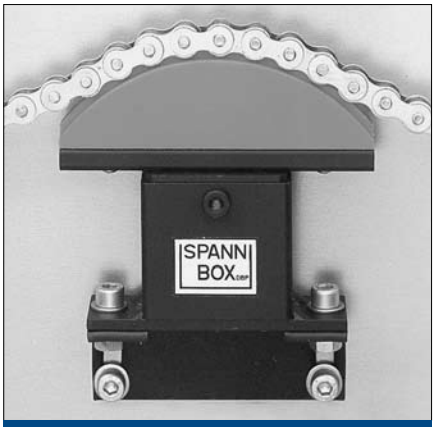

SPANN-BOX® size 1
with arch profile

Typ-KL

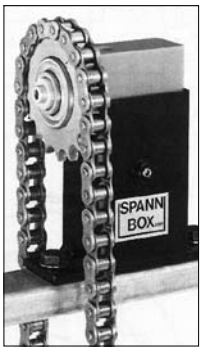

Typ-KS

SPANN-BOX® size 1
with sprocket

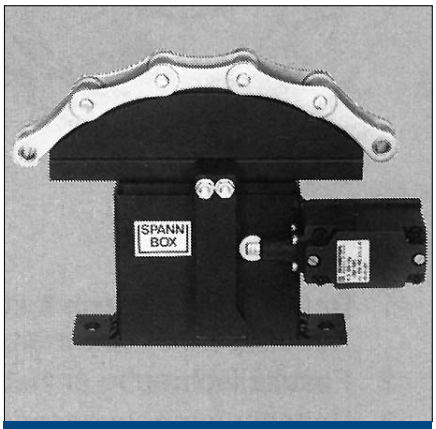

SPANN-BOX® size 1
with arch profile and limit switch

SPANN-BOX® size 2
with block profile

Chain	Pitch	Arch profile					Semicircle profile					Deflecting profile					Block profile					Sprocket				
		Size				SPANN-BOY®	Size				SPANN-BOY®	Size				SPANN-BOY®	Size				SPANN-BOY®	Size				SPANN-BOY®
No.	mm	0	30	1	2		0	30	1	2		0	30	1	2		0	30	1	2		0	30	1	2	
not mentioned chains with width up to 15 mm						X	X																			
455	9,525			X			X		X					X										X		X
D 455	9,525		X	X		X	X		X					X												
T 455	9,525		X	X		X			X					X												
462	12,7		X	X		X	X		X					X										X		X
D 462	12,7		X	X	X	X	X		X	X				X	X											
T 462	12,7		X	X	X				X	X				X	X											
501	15,875		X	X		X	X		X					X										X		X
D 501	15,875		X	X	X	X			X	X				X	X											
T 501	15,875			X	X					X					X											
513	19,05		X	X	X	X			X	X				X	X									X		X
D 513	19,05		X	X	X				X	X				X	X											
T 513	19,05			X	X										X											
548	25,4		X	X	X					X				X	X											
D 548	25,4			X	X															X						
T 548	25,4				X															X						
563	31,75			X	X										X											
D 563	31,75				X															X						
T 563	31,75				X															X						
596	38,1				X															X						
D 596	38,1				X															X						
T 596	38,1																			X						
613	44,45																			X						
D 613	44,45																			X						
T 613	44,45																			X						
652	50,8																			X						
D 652	50,8																			X						
T 652	50,8																			X						
671	63,5																			X						
D 671	63,5																			X						
T 671	63,5																			X						
679	76,2																			X						
D 679	76,2																			X						
T 679	76,2																			X						

Tension values and range of shift

Size	SPANN-BOY®		SPANN-BOX® size 0		SPANN-BOX® size 30 or 1		SPANN-BOX® size 2	
Range of shift	40 mm		40 mm		40 mm		60 mm	
Spring design	light	heavy	light	heavy	light	heavy	light	heavy
Tension force	N	N	N	N	N	N	N	N
1 spring released	58 - 32	132 - 60	58 - 32	132 - 60	58 - 32	132 - 60	148 - 82	262 - 116
2 springs released	-	-	-	-	116 - 64	264 - 120	296 - 164	524 - 236
3 springs released	-	-	-	-	174 - 96	396 - 180	444 - 246	786 - 454

The chain weight should not be higher than the force of a spring already released by 50%.
The second and the third spring may be activated later if required.
Further combinations and profiles made to specification are also available.

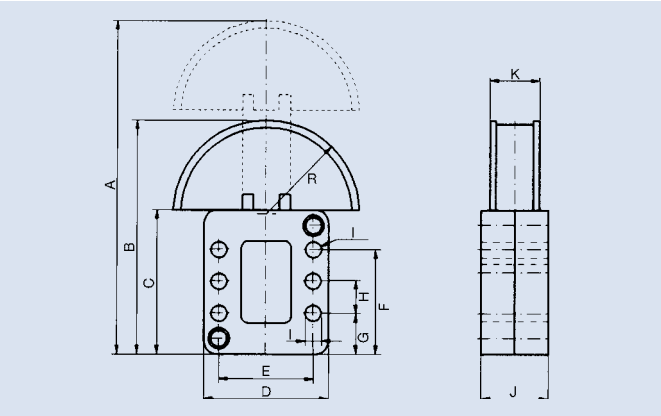

SPANN-BOX® size 0

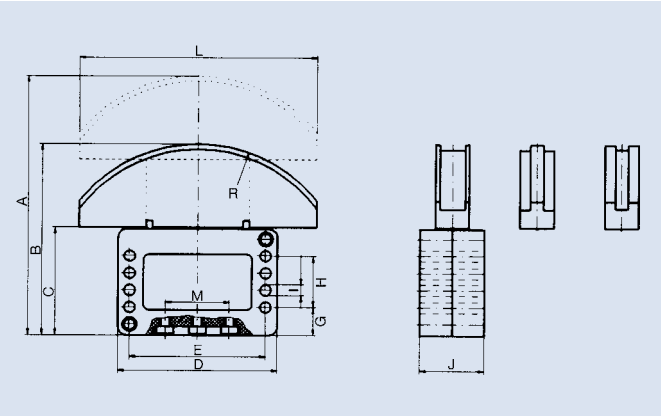

SPANN-BOX® size 30 with arch profile

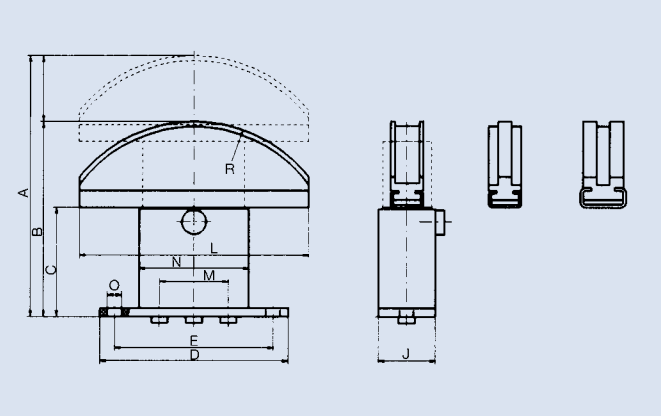

SPANN-BOX® size 1 and 2 with arch profile

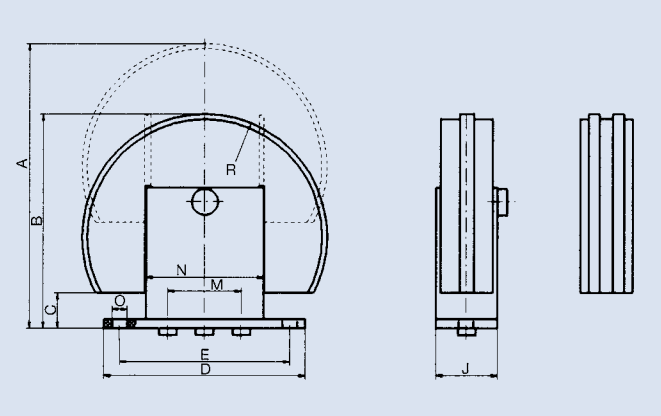

SPANN-BOX® size 1 and 2 with deflecting profile

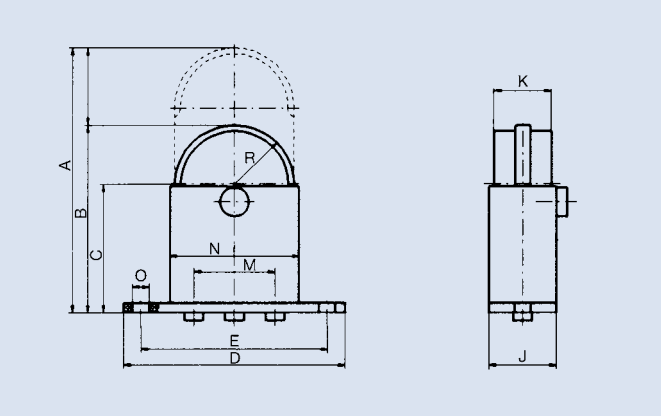

SPANN-BOX® size 1 and 2 with semicircle profile

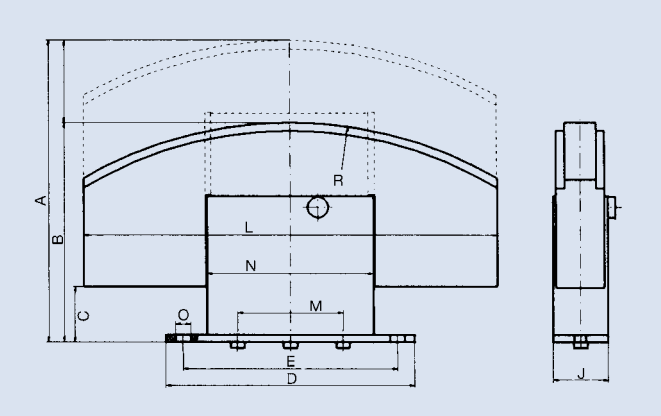

SPANN-BOX® size 2 with block profile

Dimensions	Ind.	A	B	C	D	E	F	G	H	I	J	K	L	M	N	O	R
Size 0		134	94	58	50	38	42	16,2	12,9	6,5	27	20	-	-	-	-	37,5
Size 30		152,5	112,5	63,5	94	80	-	16,5	30	6,5	38	-	140	38	-	-	90
Size 1, arch profile		158	118	66	115	97	-	-	-	-	35	-	140	42	67	8,5	90
Size 1, arch profile	*	173	133	81	115	97	-	-	-	-	40	-	140	42	67	8,5	90
Size 1, semicircle profile		137	97	66	115	97	-	-	-	-	35	30	-	42	67	8,5	31
Size 1, semicircle profile	*	152	112	81	115	97	-	-	-	-	40	30	-	42	67	8,5	31
Size 1, deflecting profile		162	122	20	115	97	-	-	-	-	35	-	-	42	67	8,5	70
Size 2, arch profile		209	149	86	180	155	-	-	-	-	40	-	200	76	120	11	150
Size 2, arch profile	*	229	169	106	180	155	-	-	-	-	40	-	200	76	120	11	150
Size 2, semicircle profile		203	143	86	180	155	-	-	-	-	40	35	-	76	120	11	57
Size 2, semicircle profile	*	223	163	106	180	155	-	-	-	-	40	35	-	76	120	11	57
Size 2, deflecting profile		225	165	40	180	155	-	-	-	-	40	-	-	76	120	11	100
Size 2, block profile		218	158	40	180	155	-	-	-	-	40	-	300	76	120	11	300

* long casing

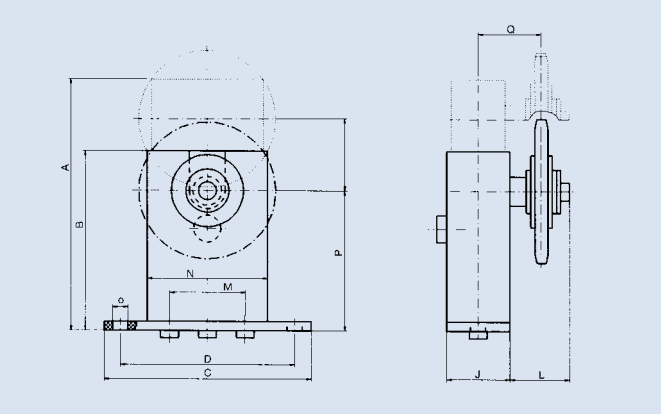

SPANN-BOX® size 1 with sprocket type KL

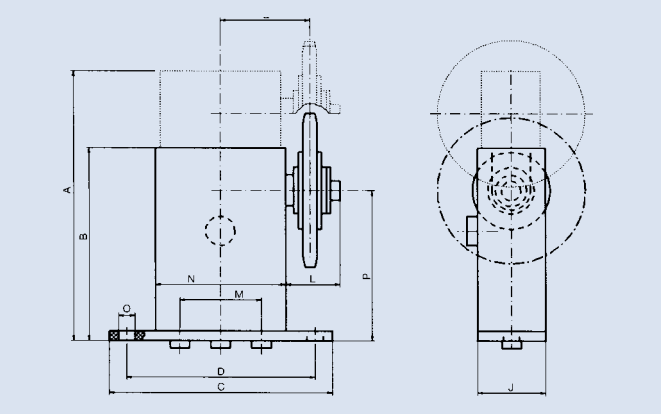

SPANN-BOX® size 1 with sprocket type KS

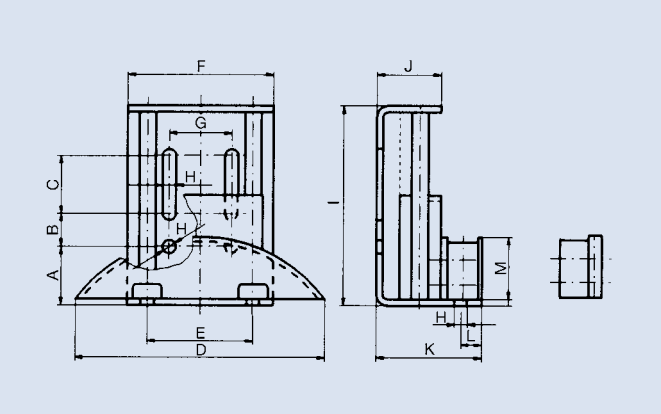

SPANN-BOY® with arch profile

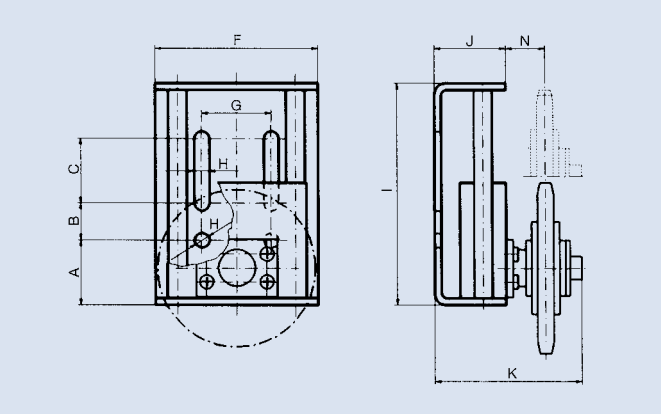

SPANN-BOY® with sprocket

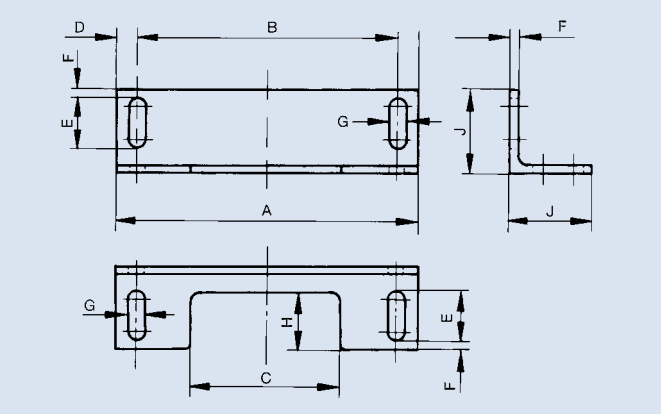

Mounting bracket for SPANN-BOX® size 1 and 2

Standard sprockets

Chain No.	Number of teeth			
455	20	21	23	
462	16	17	18	
501	14	15	16	17
513	13	15	16	17

Dimensions	A	B	C	D	E	F	G	H	I	J	K	L	M	N	O	P	Q
SPANN-BOX® size 1 (type KL)	140	100	115	97	-	-	-	-	-	35	8,5	35 max.	42	67	8,5	78	35
SPANN-BOX® size 1 (type KS)	140	100	115	97	-	-	-	-	-	35	8,5	30 max.	42	67	8,5	78	46
Bracket size 1	115	97	60	9	25	5	8,5	30	-	45	-	-	-	-	-	-	-
Bracket size 2	180	155	90	12,5	30	5	11	35	-	50	-	-	-	-	-	-	-
SPANN-BOY® (arch profile)	28	16	28	120	50,8	70	30	6,4	96	31	51	10	30	-	-	-	-
SPANN-BOY® (with sprocket)	28	16	28	-	-	70	30	6,4	96	31	66 max.	-	-	17	-	-	-

SPANN-BOX® and mounting brackets made of stainless steel grade 1.4301 on request (Please note: different sizes!)

In order to avoid errors or misunderstandings and thus time-consuming queries please supply the following details:

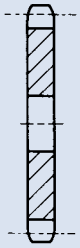

Type A

Plate sprocket Type "A"

(for simplex roller chains according to DIN 8187)
1. Number of plate sprockets
2. ⚙-plate sprocket No. (e.g. plate sprocket with 20 teeth for simplex roller chain No. 462 – 1/2" x 5/16" = A 20 462)
3. Custom bore size (fit normal H7)

Sprocket Type "B"

(for simplex, duplex and triplex roller chains according to DIN 8187)
1. Number of sprockets
2. ⚙-sprocket No. (e.g. sprocket with 23 teeth for duplex roller chain No. D 501 – 5/8" x 3/8" = B 23 D 501)
3. Custom bore size (fit normal H7)
4. Groove sizes (for keyways also tightening direction); without additional specifications (e.g. if you merely state groove according to DIN) we will supply sprockets on the basis of DIN 6885 sheet 1.
5. Inside threads or pin holes

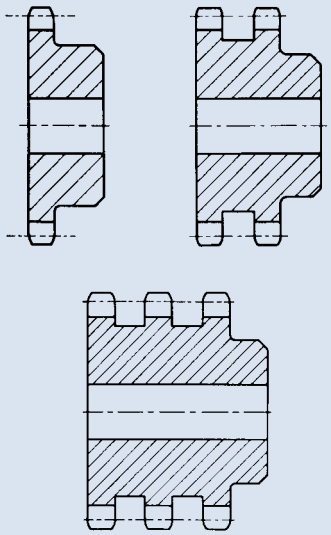

Type B

Sprockets in special designs

(for all chains in our manufacturing line)
1. Number of sprockets
2. Appropriate ⚙-chain No. or ISO No.; alternatively pitch p, inner width b1 (between inner plates) and roller Ø, pin Ø or bushing Ø.
3. Number of teeth z
4. Bore size and fit
5. Hub diameter and hub length
6. Hub seat (one-sided or symmetrical); in case of asymmetrical hubs please state the two hub sections up to the sprocket centre
7. Groove sizes (for keyways also tightening direction)
8. Inside threads or pin holes

It is advisable to include a precise drawing when ordering sprockets in special designs.

Toothing

(for all chains in our manufacturing line including inverted tooth chains up to p = 25,4 mm)
1. Number of wheel bodies to be toothed
2. ⚙-chain No. or ISO No.; alternatively pitch p, inner width b1 and roller Ø, pin Ø or bushing Ø
3. Number of teeth

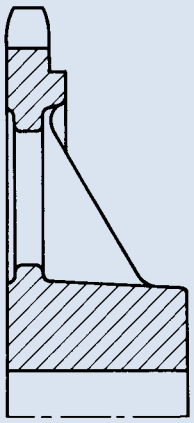

Type B (Cast iron)

Grooves

1. Number of parts to be grooved
2. Groove sizes (normal DIN 6885 sheet 1)

Lantern gear toothing

1. Number of lantern gears

Chain tensioner SPANN-BOX®

1. Number of chain tensioners SPANN-BOX®
2. ⚙-chain No. or ISO No.
3. SPANN-BOX® size
4. Sliding profile (arch, semicircle or deflecting profile)
5. Spring tension (high or low) and design (ordinary steel or grade 1.4301 [V2 A])

ETP Bushings

1. Number of bushings
2. Order number

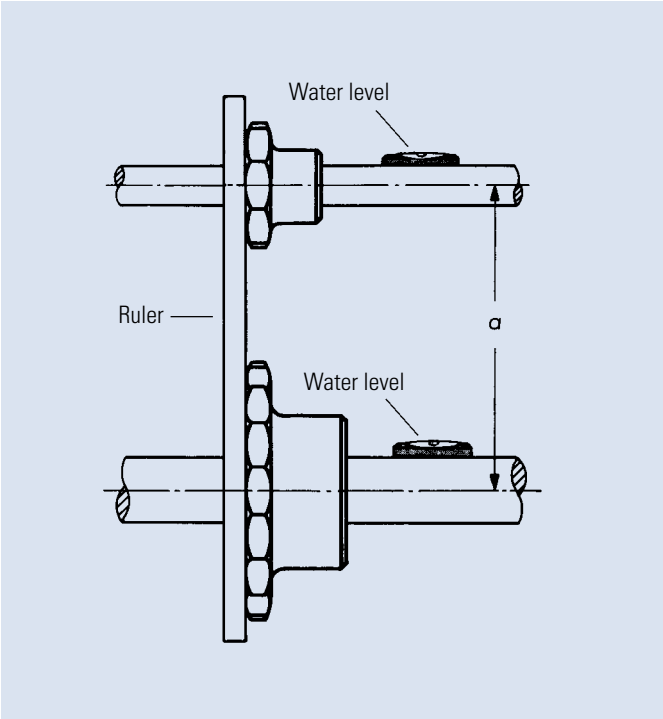

Alignment of the sprockets

The wear life of a chain largely depends on the proper alignment of the sprockets. Sprockets must always align exactly. Alignment can be checked by means of a long ruler applied across the sprockets. This check must be repeated several times with the sprockets turned a little further each time. Subsequently, they have to be secured in axial direction.

The shafts must be aligned exactly horizontally. They must be axially parallel and free from runout. In order to avoid vibrations they should be dimensioned according to the weight of the sprockets, the design layout and the loads.

Chain tensioning

Unlike belt drives, chains do not require pre-tensioning, and they should have a slight slack span (see page 110). Chains must not be over-tightened, since this would load the drive unnecessarily and lead to premature wear of the chain. However, if chains are fitted too loosely, they tend to "jump off" the sprockets. The chain slack span should be checked after a few weeks. Initial elongation is higher than during the subsequent operation period due to running-in wear.

FAULTY MOUNTING

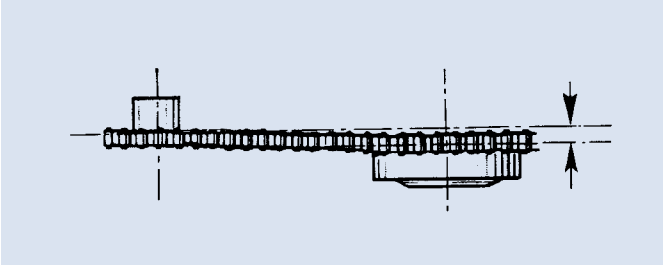

Chain runs on laterally offset sprockets

In this case the sprockets are not lopsided, but they are laterally offset. Therefore the chain runs laterally skewed. As a result, the chain plates heavily grind on the teeth of the sprocket and wear quickly. The lateral pressure also loosens the riveting. The chain cannot run smoothly and there is a relatively strong elongation due to the strong wear between pins and bushings.

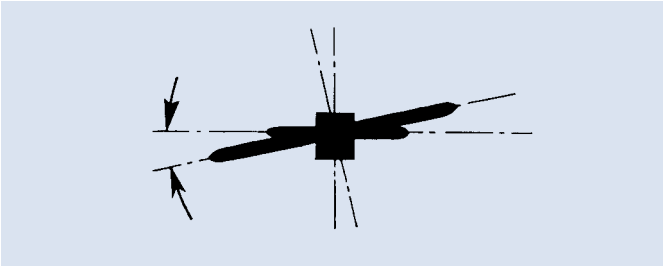

Tilted position of sprockets

Originally the sprockets were aligned. During tensioning the gear mechanism shifted and is now in an angle to the line of the sprocket on the machine shaft. The consequences are the same as before. Apart from that, axial forces put pressure on the machine and gearing shafts.

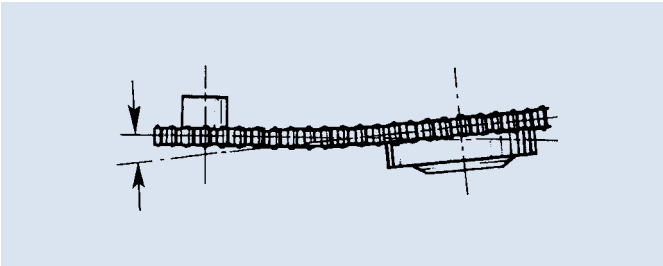

Skewed position of sprockets

The drawing shows that the sprockets are aligned, but that they are skewed, so that the driven sprocket, for example, has now a tilted position against the angle. In this case, the chain is also subject to extreme load and will wear prematurely.

The followings aspects should be considered when selecting a lubricant:

- **Oil or grease lubrication**
  Oils are normally used for continuous relubrication. Grease is preferred, if the ambient air contains dust (lime, talcum, flour etc.).

- **Operating temperature**
  This is one of the most significant aspects of lubricant selection. The decisive criterion is the temperature in the chain bearing during operation.

- **Viscosity**
  Viscosity must be high enough so that all the chain parts are protected against wear and galling. However, despite high viscosity the oil must be sufficiently capable of flow.

  The following rules of thumb apply:

  - Low bearing pressure, high chain speed = low viscosity
  - High bearing pressure, low chain speed = high viscosity
  - Low operating temperature = low viscosity
  - High operating temperature= high viscosity

- **Initial lubricant**
  It must have excellent corrosion protection qualities and guarantee sufficient wear protection up to the first relubrication. The envisaged operating conditions should be taken into account.

- **Load-bearing properties**
  Sufficient load-bearing properties of the lubricating oil film help to reduce wear.

- **Friction point wetting**
  The chain lubricant must be able to permeate the lubrication gap autonomously.

- **Chain cooling**
  In conjunction with appropriate lubrication procedures certain oils are suitable for cooling. The maximum service temperature of the lubricating oil must never be exceeded.

- **Applications in the food industry**
  Lubricants must comply with specific food law requirements.

- **Applications in the textile industry**
  Non-drip and non-adhesive oils should be used.

- **Corrosion protection**
  This is particularly important for chains used in corrosive environments.

- **Applications in wet environments**
  Lubricants must not be washed off by splash water. They must be capable of creep, and supply sufficient corrosion protection even as emulsions.

- **Muffling of chain noises**
  Lubricants with higher viscosity ensure better muffling properties than low viscosity lubricants. However, the lubricants must always be sufficiently capable of flow.

- **Contact with elastomers and synthetic materials**
  Compatibility with elastomers and synthetic materials must be guaranteed. Compatibility tests are always required.

- **Lifetime lubrication**
  Lubrication has been designed in a way that the lubricant will be functioning during the entire lifetime of the chain.

  Lifetime lubrication for chains is possible, if
  - the chain load is low
  - the service temperature of the lubricant is considerably underrun
  - the overall operating time is low

  For lifetime lubrication special non-aging chain lubricants have been developed.

- **Ground water hazards**
  Please refer to the appropriate safety data specifications

- **General environmental compatibility**
  Please use lubricants, which are biodegradable and particularly environmentally friendly.

Chain lubrication from production to operation

Chain manufacturers	Initial lubrication
	Corrosion and wear protection
	Selection of suitable lubrication method
Machine/engine manufacturers	Make already installed chains accessible for manual lubrication
	Plan chain protection boxes
	Provide oil pans
	Design lubrication facilities
	State reference values for lubrication schedules and lubricant dosage
Machine/engine operators	Inspection of lubrication state and, if necessary, evaluation of lubrication schedules and lubricant dosage
	Chain cleansing
	Chain conservation
	Relubrication

Also refer to the chapter "Maintenance of chain drives" on page 112

General information

Chains running on sprockets are subject to wear of the joints due to angle-sliding movements of the pins. Therefore efficient lubrication is of utmost importance. Even low-maintenance roller chains with plastic slide bearings should be relubricated occasionally.

Dry running condition (curve 1) causes excessive wear and destroys the chain within a very short time.

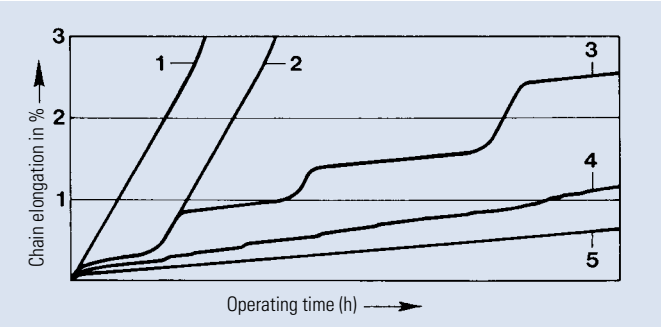

Chain elongation as a function of operating time with different lubrication states

One-time lubrication (curve 2) only delays the wear until the lubricant has been used up.

Intermittent dry running conditions (curve 3) frequently occur with manual lubrication, particularly if deadlines for relubrication have not been met.

Wrong lubrication (curve 4) results in uneven wear and may be caused by inferior, dirty, wrong (unsuitable viscosity) or too little lubricant.

Correct lubrication (curve 5) is crucial for chain drives according to performance diagrams.

Lubrication and degree of efficiency

The following graph shows the influence of lubrication on efficiency.

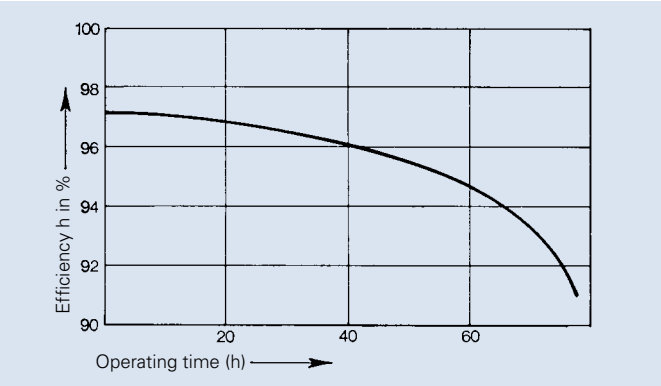

Degree of efficiency as a function of operating time with one-time lubrication (according to Worobjew)

Lubricants

The selection of an appropriate lubricant depends first of all on the type of lubrication.

Low viscosity mineral oils are particularly suitable for chain drives.

Ambient temperature °C	Viscosity group of lubricant
- 5 up to + 25	ISO VG 100 (SAE 30)
25 up to 45	ISO VG 150 (SAE 40)
45 up to 65	ISO VG 220 (SAE 50)

For higher temperatures (e.g. furnace chains) graphite or molybdenum disulfide (MoS_2) applied either as additive or spray will facilitate lubrication.

Low-viscosity or hardened grease products with a drop point of 70° C are also suitable for manual lubrication. In special cases liquidised grease may be sprayed on. Initial operation can start immediately after evaporation of the volatile carrier substance.

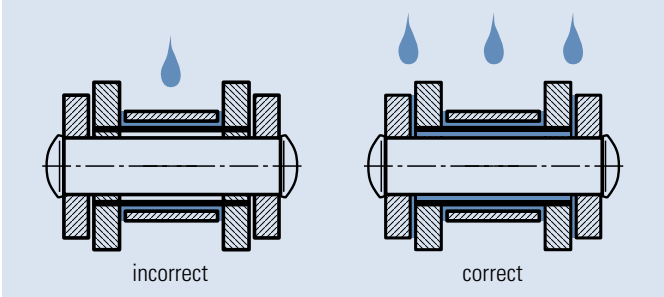

It is very important that the lubricant reaches the joints (pins, bushings), which are subject to wear.

Recommendations for lubrication

The type of lubrication depends on the chain pitch and the chain speed.

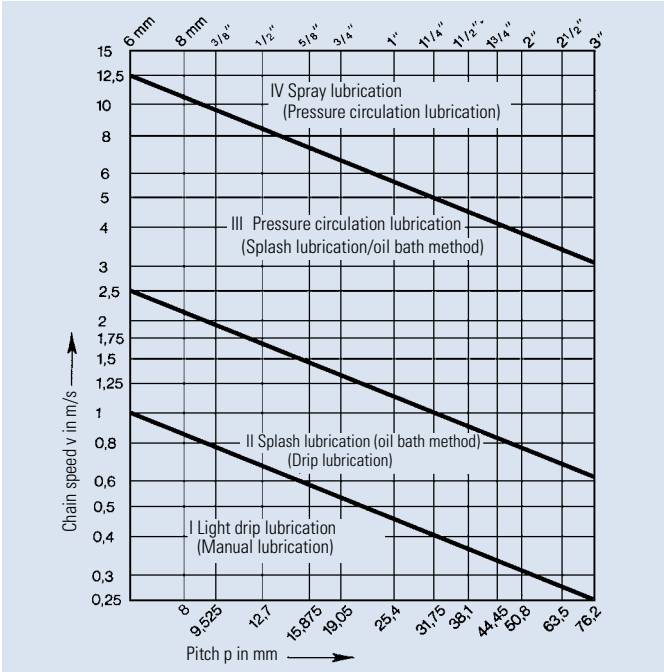

The lubrication types, which are not in brackets, are preferable to those in brackets (permitted).

In order to achieve a long wear life and high cost effectiveness for chain drives in lubrication range I (light drip lubrication or manual lubrication) relubrication schedules must be determined by tests.

Manual lubrication

This type of lubrication by means of oil can and brush is not very safe and therefore only suitable for chains with occasional operation or for secondary drives and low chain speeds.

Sufficient lubrication should take place at least once a day (if possible every 8 operating hours). Lubricant colouration may not occur.

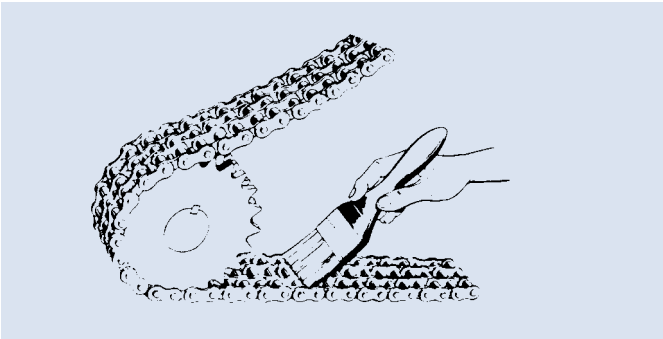

Spinning disk lubrication

With this type of lubrication the chain operates above oil level. A disk submerging into the lower oil level (peripheral velocity between min. and max. 40 m/s) centrifuges oil against the casing walls from where it continuously runs down onto the chain via drip rails.

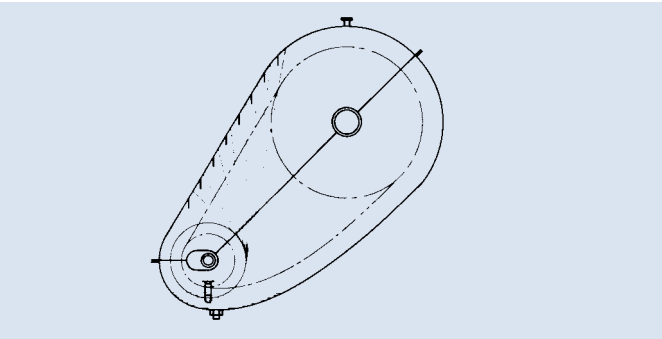

Drip lubrication

Drip lubrication by means of wick oilers, needle oilers or drip oilers is only suitable for low load bearing drives. Sufficient lubrication of the joint surfaces must be ensured. Lubricant colouration may not occur.

Splash lubrication (oil bath method)

There is just enough oil in a sufficiently sized protection box (the worn and elongated chain must not be able to hit against the casing wall) to allow the chain plates to submerge into the bath up to the rollers or the bushings respectively.

Higher submerging depths cause the oil to heat up and lead to untimely oxidation of the oil.

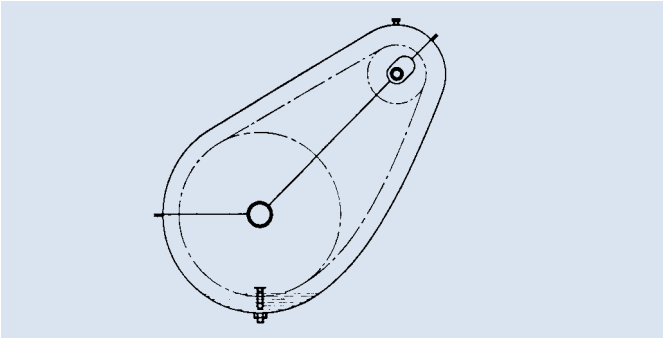

Pressure circulation lubrication

This type of lubrication is suitable for fast-running drives and high loads. The oil can be supplied via a connection to an existing pressure oil pipe or via an extra pump. By means of a lubrication shower situated near the large sprocket, oil is sprayed onto the inner side of the chain return strand in running direction over the whole width of the chain. High load-bearing drives need a second shower for cooling with the oil to be sprayed onto the pull strand. The oil quantity depends on the drive size and the amount of heat to be dissipated.

Spay lubrication

Spray lubrication is very similar to pressure circulation lubrication. Instead of a lubrication shower, however, lubrication spray valves atomise the oil into aerosol form, and thus the fine oil mist can reach every single chain joint.

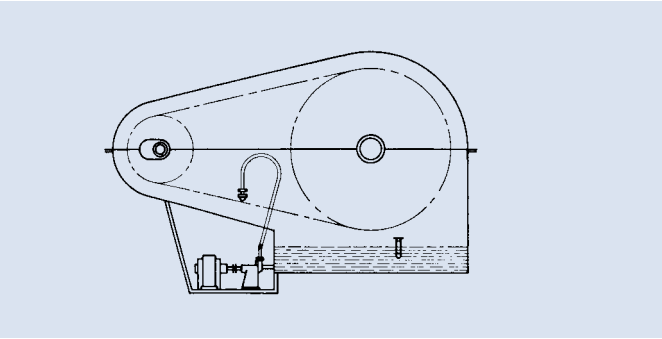

Lubrication overview

Lubrication range	Chain speed m/s	Lubrication a) favourable b) permitted	Transmissible power: correct lubrication (favourable/permitted)	insufficient lubrication: without contamination	insufficient lubrication: with contamination	without lubrication*
I	up to ≈ 1	a) Light drip lubrication b) Manual lubrication/grease lubrication	100 %	60 %	30 %	15 %
II	up to ≈ 2,5	a) Splash lubrication (oil bath method) b) Drip lubrication		30 %	15 %	
III	up to ≈ 12,5	a) Pressure circulation lubrication b) Splash lubrication (oil bath method), if possible with spinning disk		not permitted		
IV	above 12,5	a) Spray lubrication b) Pressure circulation lubrication (possibly with oil cooling system)				

* a wear life of 15 000 hours cannot be guaranteed!

Wippermann lubrication

Product	Oil	Grease	Spray	Application °C from	Application °C to	Technical features
WKS-C		✓		- 10	+ 100	**Wippermann standard lubrication** Mineral oil-based soap-free chain grease, with wax and product-specific additives, for extreme requirements as to corrosion and wear protection Water resistant.
WKS-W		✓		0	+ 80	**Lubrication wax for chains** "Quasi dry" non-tacky lubrication film Wear protection High corrosion protection Good adhesive properties Excellent water resistance
WKS-Rapid		✓		- 15	+ 120	**White chain lubricant** Difficult to centrifuge off Protects against corrosion and wear It has absorbing and rinsing properties and provides effective lubrication Resistant to water and vapour Quite resistant to acids and bases
WKS-D	✓			- 10	+ 80	**Corrosion protection oil** Chlorine-free lubricant made with mineral oil raffinates and corrosion protection additives; thin, waxen and pressure-resistant lubrication with anti-wear additives Excellent corrosion protection.
WKS-H1	✓			- 10	+ 170	**Chain lubricant for the food and beverage industry** Synthetic lubricant for hygienic and clean lubrication, which in itself is not germinable Excellent resistance to oxidation as well as temperature-resistant and with reduced vapour generation
WKS-Plus	✓		✓	- 30	+ 250	**High-temperature lubricant** Biodegradable synthetic high temperature lubricant based on ester with a low vaporisation rate Excellent wear and corrosion protection Good adhesive properties Not explosive
WKS-HT	✓			- 30 (as of +300 °C dry lubrication)	+1000	**High-temperature lubricant with graphite additives** Synthetic high-temperature lubricant based on ester with graphite-based solid lubricants With temperatures of more than 250 °C, the oil proportion in the lubricant evaporates; the solid lubricants remain and have excellent dry-running operation characteristics
WKS-T	✓			- 55	+ 90	**Lubricant for environments with low temperatures** Fast biodegradable and low-temperature multi-purpose oil based on synthetic ester with excellent wear protection The product has a low evaporation rate and is characterised by its excellent viscosity-temperature behaviour; it is also highly age resistant
WKS-Spezial			✓	- 10	+ 80	**Chain spray for relubrication** Mineral oil-based chain spray with synthetic wax, corrosion protection and anti-wear additives (propellant: propane / butane pressure gas mixture) For relubrication of open drive chains, conveyor chains in conveying systems as well as for load chains

All lubricants supplied by WIPPERMANN are free from chlorine and silicone.

Detailed product description and safety data sheets on request.

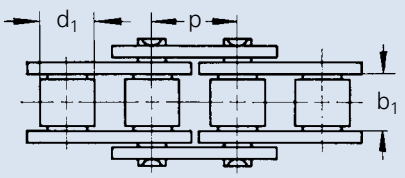

Steel link chains

Steel link chains

Generally, steel link chains can only operate on one plane, and they are primarily used as drive elements for chain drives.

They are precisely determined by three main measurements:

p = **Pitch** is the distance from pin centre to pin centre.

b_1 = **Inner width** is the distance between the inner plates.

d_1 = **Roller diameter, bushing diameter or pin diameter** is the outer dimension of the cylindrical parts between the inner plates.

The characteristic feature of a steel link chain is the chain joint.

It consists of an outer and an inner link. On this joint the calculated bearing area equals the projection of the pin onto the bearing area of the inner link. It has a different size depending on the type of chain.

In the following overview the characteristic features of various types of steel link chains are briefly described.

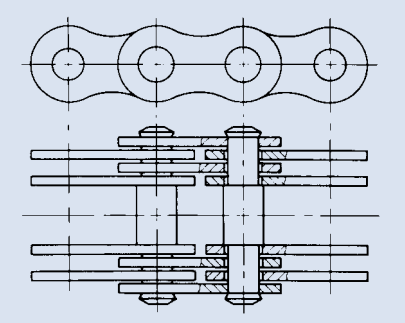
Galle chains

Galle chains

Galle chains were named after their inventor André Galle (1761-1841). A Galle chain is the simplest type of steel link chain.

The plates rotate directly on the pin lug. With this type of chain the bearing area is very small.

Therefore the chain speed should not exceed 0,3 m/s.

Consequently, Galle chains are less suitable for power transmission, and they are almost exclusively used as load chains (e.g. counterweight chains, lock chains and tack chains).

Galle chains on request (see page 59).

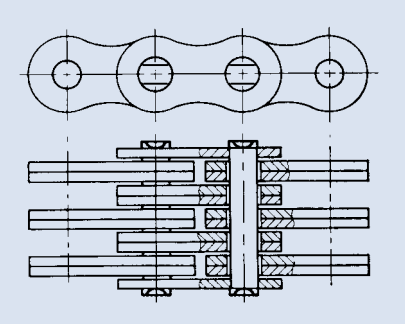
Leaf chains

Leaf chains

Leaf chains in normal design or reinforced design are used as load chains in cranes, hoisting gear and lifting equipment as well as for counterweights, e.g. on machine tools, and also to transmit back-and-forth movements.

The plates of leaf chains are punched from high-grade steel and are subsequently hardened and tempered to guarantee high fatigue strength. Very narrow tolerances ensure that all plates bear the same load proportions. Pins made of high alloy case-hardened steel are tempered to achieve high wear resistance. The tightly adjoining plates are designed in various combinations and rotate on the pins.

One special design is the heavy-duty type series U. On chains of this type all plates are mounted with a sliding fit and are also secured with laterally attached riveted disks. This design guarantees an even load distribution and reduces the bending load of the pins. These chains were especially developed for heavy loads and operations under harsh conditions. Due to their high fatigue strength they are particularly suitable for such application areas.

Due to their design (no tooth meshing) leaf chains cannot transmit torques. Their force direction, however, can easily be deflected by means of rollers. Even with a small working width they have a high breaking load.

Dimensions as of page 51.

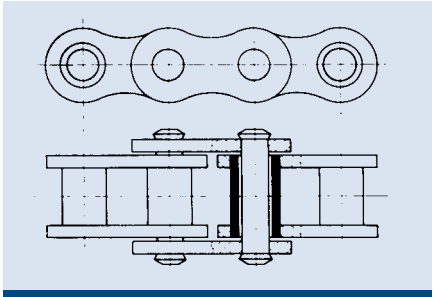

Bush chains

Bush chains

Bush chains are more wear-resistant than Galle chains. The inner links consist of two inner plates with two force-fitted bushings. The outer links consist of two outer plates with two force-fitted and riveted pins.

Chain speeds of up to 5 m/s are possible depending on the pitch.

Due to their robust design bush chains are mainly used as drive and conveyor chains, particularly where there are rough operating conditions, e.g. in mining or construction site equipment.

For dimensions see page 47.

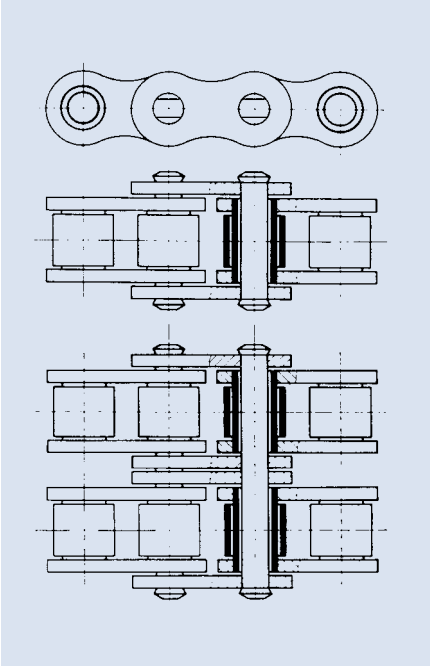

High performance roller chains

High performance roller chains

Compared to bush chains, high performance roller chains are of better quality due to the use of higher steel grades and heat treatment. Furthermore, they are produced with higher accuracy and narrower tolerances. The visible difference is the rollers, which are mounted on the bushings with running fit, and which absorb the meshing impact in the sprocket and thus reduce sprocket wear. Plates and rollers are hardened and tempered in order to achieve high fatigue strength, whereas bushings and pins, which are subject to wear, are case-hardened.

For high power transmission under restricted mounting conditions multi-strand roller chains can be used. This means that several simplex roller chains are connected by means of an end-to-end pin to form one single unit. Duplex and triplex chains are standardised.

Roller chains can be employed universally and are therefore the most common chain type. They are not only used as drive and gear chains in machine construction, but also in special designs with attachments for transport and conveyance purposes or instead of rack and pinion arrangements.

Roller chains RF made of stainless and acid-resistant steel grade 4301 have proved their value on corrosion-endangered drives and because of their anti-magnetic properties for many years. They are mainly used in the chemical, beverage and food industry.

Dimensions as of page 10.

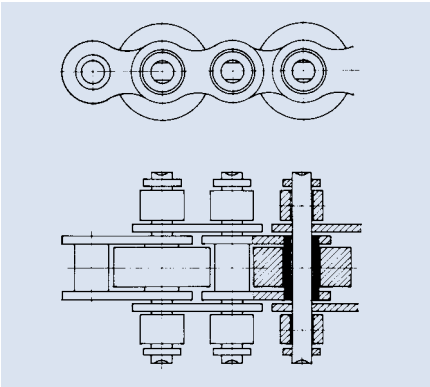

Accumulator chains

Accumulator chains

Accumulator chains are employed, when accumulation of piece goods during transportation is required. The chain runs on lateral support rollers, whereas the conveyor roller in the middle runs freely.

The particular advantages of this type of chain lie in the simple control, the exact guiding possibilities as well as in the smooth transition from one direction to another without abrupt acceleration. During intentional or unintentional accumulation of the transported piece goods no excessive impact pressure is put on the following transport units since the power and free conveyor chain will continue to run smoothly under the goods until the end of the accumulation, when transportation will continue due to friction.

For dimensions see page 26, 27, 48 - 50.

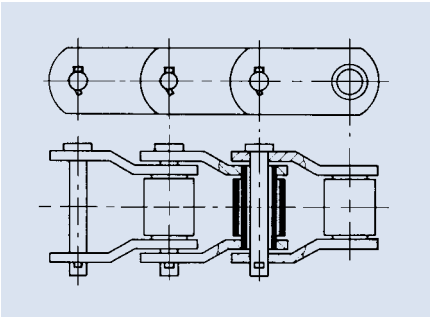

Cranked link chains

Cranked link chains (Rotary chains)

Cranked link chains (Rotary chains) are in fact roller chains, but only cranked plates are used. These plates help to give the chain a high amount of elasticity so that load impacts can easily be absorbed. It is also quite straightforward to repair cranked link chains since each individual link can be replaced.

Cranked link chains (Rotary chains) are mainly employed for applications with intermittent impacts and where the drive is exposed to rough soiling, e.g. in excavation machinery, crawlers for excavators and dozers or drilling equipment.

Cranked link chains (Rotary chains) on request (see page 59).

High efficiency:

η up to 0,98 with a properly lubricated chain under normal circumstances and with a drive working under full load.

Long wear life:

≈ 15,000 operating hours if the correct drive was selected and with appropriate maintenance.

Extensive power and speed range:

P up to 225 kW with simplex roller chain p = 76,2 mm
Power diagram for roller chains according to DIN 8187 see page 103.
Power diagram for roller chains according to DIN 8188 see page 104.
Power diagram for roller chains according to ISO 606 see page 105.

Long shaft distance:

The shaft distance (usually between 30 times and 50 times the pitch) has no fixed measurements. It can easily be adjusted by shortening or lengthening of the chain, even after completed assembly, in order to meet altered construction requirements.

No slip:

In contrast to friction-locked drives chain drives have no slip. In motor vehicles, camshaft drives with chains guarantee exact valve timing.

Multiple transmission ratios:

The transmission ratio:

$$i = \frac{n_1}{n_2} = \frac{z_2}{z_1}$$ (usually up to approx. 7:1)

(in special cases up to 10:1 in one step possible)
remains constant during the entire operation period due to its positive locking connection. However, it may be easily altered by simply changing the sprockets and keeping the shaft distance.

High load capacity:

For the permissible bearing pressure with recommended lubrication please refer to the table on page 102.

Elastic properties:

Roller chain drives have a high elasticity, because of the plate material and the lubrication layer between rollers, pins and bushings.

Versatile applications:

Roller chains are mainly used as drive elements for power transmission or as load chains; equipped with special links they can also be used for transportation and conveyance purposes. One chain is able to simultaneously drive several shafts with the same or opposite rotational direction at the same or at different speeds. It can also be employed as a rack and pinion assembly (lantern gears).

Cost effectiveness:

Roller chains do not need to be pre-tensioned. Therefore there are only minor bearing loads. Space-saving construction, simple mounting, low service and maintenance costs make chain drives very economical.

Designation	Symbol	Unit	Basic equations
Input speed	n	rpm	
Operating factor	k		$k = f_y \cdot f_i \cdot f_z$
Minimum tensile strength	F_B	N	see chain tables
Torque	M	Nm	$M = \frac{9550\,P}{n} = \frac{F \cdot d_0}{2000}$ in Nm
Correction factor for impact loads	f_y		see page 101
Correction factor for transmission ratio	f_i		see page 102
Correction factor for shaft distance	f_a		see page 102
Correction factor for number of teeth	f_z		see page 102
Bearing area	f	cm^2	see chain tables
Bearing pressure	p_r	N/cm^2	$p_r = \frac{F}{f}$ see page 100
Speed	v	m/s	$v = \frac{z \cdot p \cdot n}{60\,000}$ in m/s
Weight of chain per meter	q	kg/m	see chain tables
Power	P	kW	$P = \frac{F \cdot v}{1000} = \frac{M \cdot n}{9550}$ in kW
Diagram power	P_c	kW	$P_c = P \cdot k$ in kW
Safety factor	S		$S = \frac{F_B}{F_G}$
Impact coefficient	Y		see tables page 101
PCD	d_0	mm	$d_0 = \frac{p}{\sin \frac{180°}{z}}$ in mm
Pitch	p	mm	see chain tables
Transmission ratio	o		$i = \frac{n_1}{n_2} = \frac{z_2}{z_1}$
Shaft distance	a	mm	
Number of teeth	z_1, z_2		
Tensile force	F	N	$F = \frac{1000\,P}{V} = \frac{2000\,M}{d_0}$ in N
Tensile force, dynamic	Fd	N	$F_d = F \cdot f_y$ in N
Tensile force, centrifugal	FF	N	$F_F = q \cdot v^2$ in N
Tensile force, total	FG	N	$F_G = F_d + F_F$ in N

Dimensioning of leaf chains

The transmissible load as well as the operating conditions i.e. type of load, chain speed, chain activity rate, impact level and operating temperature must be considered when selecting a leaf chain.

The permissible dynamic tensile force depends on the fatigue strength of plates and pins. As an indirect benchmark the breaking load of chains is used, and thus fatigue strength is taken into account by including a sufficient safety factor. Type and design of the chain determine the safety factor to be selected. In order to be able to dimension leaf chains, the tensile force F as well and the operating conditions for assessing further dynamic loads have to be known. The tensile force F, the factor f_1 for the operating conditions and the safety factor S are crucial to calculate the required minimum breaking load F_B of the chain.

The safety factor S is subject to the regulations stipulated by various authorities and the German Technical Inspection Authority (TÜV). If there are no specific regulations, the factor S can normally be selected between 7 and 12 according to the type and design (combination of plates) of the respective chain.

Calculation of the minimum breaking load FB

$F_B \geq F \cdot f_1 \cdot S$

$F_B \geq F \cdot f_1 \cdot (n_{LW} \cdot 100 \cdot f_u)^{0,1}$

F_B : Minimum tensile strength of chain

F : Tensile force in chain

f_1 : Operating factor

S : Safety factor

n_{LW} : No. of load cycles (fatigue limit: $n_{LW} = 10^7$)

f_u : Correction factor for PCD

$S = (n_{LW} \cdot 100 \cdot f_u)^{0,1}$

$d_0 = d_u + g$

d_0 : PCD of deflection

d_u : Diameter of contact surface of deflection roller

g : Plate height

p : Chain pitch

Load type	f_1
no impact	1,00
uniform, single slight impacts, slightly swelling load	1,25
repeated slight impacts, moderately swelling load	1,37
repeated slight impacts, highly swelling load	1,59
repeated high impacts, moderately swelling load	1,72
repeated high impacts, highly swelling load	1,85

PCD d_0	f_u
4,5 · p	9,10
5,0 · p	7,14
5,5 · p	5,95
5,8 · p	5,43
6,0 · p	5,13
6,5 · p	4,52
7,0 · p	3,79
7,5 · p	3,70

Chain speed	Minimum safety factor S
up to 5 m/min.	7
> 5 ... 10 m/min.	10
> 10 ... 30 m/min.	12

Further details:

- For temperatures as of 150 °C higher safety factors apply. On request we will give you more detailed information as to these safety factors.
- The higher the number of plates the higher the safety factor S should be.
- For single lacing the safety factor should be higher than for double lacing.

Calculation of the bearing pressure p_r

$$p_r = p_r = \frac{F \cdot f_1}{f} \leq p_{rzul}$$

p_r : Bearing pressure
f : Chain joint area
p_{rzul} : Permissible pressure in bearing area
F : Tensile force in chain
f_1 : Operating factor

Chain speed	P_{rzul}	
up to 5 m/min.	14000	N/cm²
> 5 ... 10 m/min.	12000	N/cm²
> 10 ... 30 m/min.	9000	N/cm²

In case of permanent tensile force (counter balances) p_{rzul} must be smaller than with a regularly released chain.

Check and maintenance of leaf chains

Permissible wear elongation may be max. 3 %. If a chain has elongated by 3 % caused by wear in the joints, it must be replaced. Therefore leaf chains must be subjected to wear checks at regular intervals. These checks should comprise:

1. Check of elongation in working area (max. 3 %)
2. Check of play in joints (by pushing the chain together, pulling it apart again and measuring the length difference)
3. Check of pin fit in outer plates
4. Check for fatigue failure (cracks in plates)
5. Check for deformed plates
6. Check for corrosion (pitting corrosion)
7. Check of flexibility (sufficient lubrication)

Leaf chains must be relubricated at regular intervals (see as of page 91). Sufficient lubrication will considerably reduce wear and increase the wear life by a multiple.

Deflection of leaf chains

$d_0 = d + g$
$d_a = d_u + 2 \cdot k$
$d_R \geq d_u + 2 \cdot g$
$b_1 \geq l_1$
p : Chain pitch
d_0 : PCD of deflection
d_R : Diameter with fitted chain
b_1 : Width of contact surface
g : Plate height

$$k = 0{,}86 \cdot \frac{g - d_2}{2}$$

$b2 \geq 1{,}2 \cdot b_1$
d_u : Diameter of contact surface of deflection roller
d_a : Outer diameter of roller
b_2 : Roller width
l_1 : Width of chain over pin
k : Height of collar
d_2 : Pin diameter

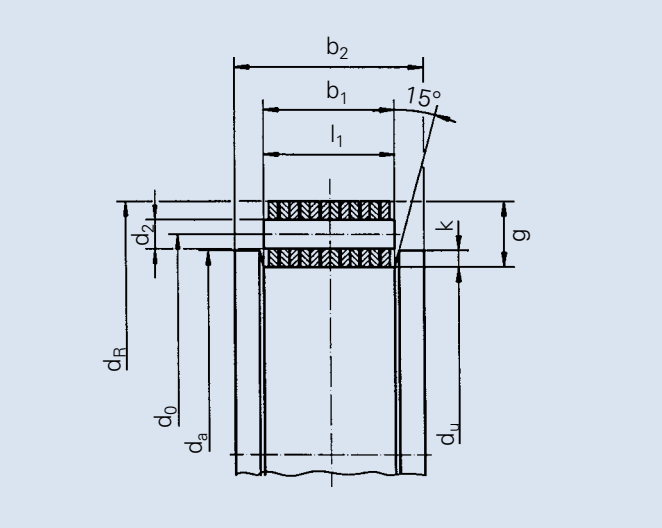

Leaf chains heavy duty design U

$$k^* = 0{,}86 \cdot \frac{g - d_3}{2}$$

$d_a^* = d_u + 2 \cdot k^*$
da* : Outer diameter of rollers (for chains with washers)
k^* : Height of collar (for chains with washers)
d_3 : Diameter of washers

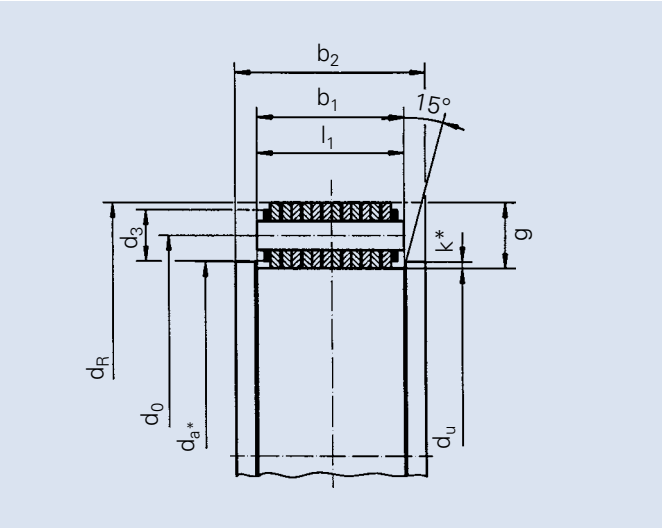

www.bergab.ru Берг АБ bergab@ya.ru Тел. (495)-228-06-21, факс (495) 223-3071

General information

The selection criteria discussed below apply to general mechanical engineering applications. Application areas such as hoisting devices (e.g. for lifting loads etc.) are excluded.

The chain life is exclusively determined by its wear behaviour. Wear occurs in the chain joints on pins and bushings. Primarily, wear depends on the chain tensile force, on deflection movements of links running along the sprockets, on the bearing area as well as on lubrication and on the number of rotations.

Therefore the chain must be dimensioned in a way that prevents overloads and fatigue failure. This means that plates and pins resist the transmissible tensile forces, rollers withstand the loads occurring when meshing with the sprocket, and that wear in the joints and on the tooth flanks remains within permissible limits.

Chain drives only have a satisfactory wear life, if the sprockets align, if they are subjected to sufficient lubrication, if there are re-tensioning facilities to compensate for the elongation occurring during operation, and if vibrations of the pull and return strands or torsional vibrations of the entire drive are eliminated. With new chains, the slack span in the return strand should be about 1 % of the shaft distance.

Basic information for chain selection

In order to be able to select a chain, at least the following values for power transmission must be known:

1. Transmissible power P in kW
2. Speed of driving sprocket n_1 in rpm
3. Transmission ratio $i = n_1/n_2 = z_2/z_1$
4. Operating conditions of drive (impact coefficient f_y)
5. Shaft distance a in mm

If possible, sprockets with at least 17 teeth should be selected. For chain drives with medium speeds or more, and for maximum loads we recommend sprockets with 21 tempered teeth. Normally, the maximum number of teeth should not exceed 150.

The optimal shaft distance is 30 times p - 50 times p and should allow an angle of lap of at least 120° on the smaller sprocket. On chain drives with an inclination of more than 60° clampingjockey sprockets or automatic chain tensioners must be mounted to ensure the required chain tension.

There often is a choice between a simplex roller chain with a longer pitch and a multiplex roller chains with a shorter pitch. However, chain drives with multiplex roller chains allow smaller sprocket diameters in restricted spaces. They cause less noise and fewer vibrations than chains with a long pitch, which run on sprockets with fewer teeth.

Factor f_y to take into account specific operating conditions

Driving motor / engine	Driven equipment		
	Centrifugal pumps and compressors Printing machines Conveyors with regular infeed Paper calenders Escalators Stirring devices for liquids Rotary driers Ventilators Generators (apart from welding generators)	Piston pumps and compressors with three or more cylinders Concrete mixers Conveyors with irregular feed Screw conveyors Rolling mills direct Saws and reciprocating saws Stirring devices for solid matter Spinning and rinsing machines Brick work machines	Planing machine and pulp grinders Excavators and other building plant Roller crushers Pulling machines Welding generators Choppers Rubber processing machines Piston pumps and compressors with one or two cylinders Gas or oil drill poles Dough mixers
Electric motors in continuous operation Internal combustion engines with hydraulic coupling Water, steam or gas turbines	1	1,4	1,8
Electric motors, which are repeatedly started and stopped with fewer than 10 cycles/min Internal combustion engines with six or more cylinders and mechanical coupling	1,1	1,5	1,9
Electric motors, which are repeatedly started and stopped with more than 10 cycles/min Internal combustion engines with fewer than six cylinders and mechanical coupling	1,3	1,7	2,1

Table of tolerable bearing pressures with recommended type of lubrication

Chain speed in m/s	Bearing pressure p_r in N/cm² with number of teeth z on smaller sprocket														
	11	12	13	14	15	16	17	18	19	20	21	22	23	24	≥ 25
0,1	3080	3120	3170	3220	3270	3300	3320	3350	3400	3430	3450	3480	3500	3530	3550
0,2	2810	2850	2880	2930	2980	3000	3030	3060	3100	3120	3140	3170	3190	3220	3240
0,4	2700	2740	2780	2830	2870	2890	2910	2950	2980	300	3020	3070	3070	3100	3120
0,6	2580	2620	2650	2700	2740	2760	2780	2820	2850	2870	2890	2910	2930	2960	2980
0,8	2490	2490	2560	2610	2650	2670	2680	2720	2750	2770	2790	2810	2830	2860	2880
1	2380	2420	2450	2490	2520	2540	2560	2590	2620	2640	2660	2680	2700	2720	2740
1,5	2290	2330	2360	2400	230	2450	2470	2500	2530	2550	2570	2590	2610	2630	2650
2	2210	2240	2270	2310	2350	2370	2380	2410	2440	2460	2470	2490	2510	2530	2550
2,5	2130	2160	2190	2230	2260	2280	2290	2320	2350	2370	2380	2400	2440	2470	2500
3	2050	2080	2110	2140	2170	2190	2210	2240	2260	2290	2320	2350	2380	2420	2460
4	1740	1830	1920	2000	2070	2100	2130	2160	2180	2220	2260	2300	2340	2380	2420
5	1400	1550	1690	1770	1840	1910	1970	2010	2050	2100	2150	2180	2210	2240	2280
6	1050	1230	1410	1540	1640	1730	1810	1880	1950	1990	2040	2070	2110	2140	2180
7	850	1000	1150	1280	1400	1510	1620	1740	1850	1870	1900	1940	1980	2020	2060
8	-	800	1020	1110	1200	1310	1420	1560	1700	1740	1780	1820	1870	1910	1960
10	-	-	810	900	1020	1110	1200	1320	1430	1460	1500	1570	1640	1700	1770
12	-	-	-	-	820	910	1070	1170	1260	1300	1350	1410	1480	1540	1600
15	-	-	-	-	-	-	890	970	1050	1100	1150	1210	1270	1330	1400
18	-	-	-	-	-	-	-	-	880	960	1050	1110	1180	1240	1300

This applies to chains according to DIN 8187 and 8188 with pins and bushings made of case-hardened steel.
Annotation: If requested, we can supply chains made of steel grades that can be subjected to particularly high bearing pressure.

Ratio between speed n and chain pitch p for z_1 = 25

Pitch p	mm	8	9,525	12,7	15,875	19,05	25,4	31,75	38,1	44,45	50,8	63,5	76,2
	inch	-	3/8"	1/2"	5/8"	3/4"	1"	11/4"	11/2"	13/4"	2"	21/2"	3"
Speed n_{max}	rpm	6000	5000	3600	2700	2000	1500	1200	900	700	550	450	300

Factors to be considered in case of different operating conditions

Impact coefficients f_y (see table on page 101)

Number of teeth of driving sprocket

z	11	13	15	17	19	21	23	25	31	37
f_z	2,5	2,0	1,75	1,55	1,35	1,2	1,1	1,0	0,78	0,64

Diagram power $P_C = P \cdot f_y \cdot f_z \cdot f_i = P \cdot k$

Transmission ratio

i	1 : 1	2 : 1	3 : 1	5 : 1
f_i	1,22	1,08	1	0,92

Shaft distance

a	10 p	20 p	40 p	80 p
f_a	1,3	1,15	1	0,85

Diagrams 1, 2 and 3 are typical power diagrams for chain drives with the following operating conditions:

a) Chain drive with two sprockets on parallel, horizontal shafts
b) Driving sprocket with 19 teeth
c) Simplex chain without a cranked link
d) Chain length 120 links (for shorter chains the chain life decreases proportionally)
e) Speed reducing ratio from 1:3 up to 3:1
f) 15000 h expected wear life; 15,000 operating hours only with a maximum of 3 % elongation caused by wear
g) Operating temperature between - 5°C and + 70°C
h) Sprockets aligned and chain tensioned according to specifications (see page 90, 110, 111)
i) Regular operation without overload, impacts or frequent restarts
j) Clean and sufficient lubrication (see page 91 - 94)

Power diagram for roller chains according to DIN 8187 (European type)

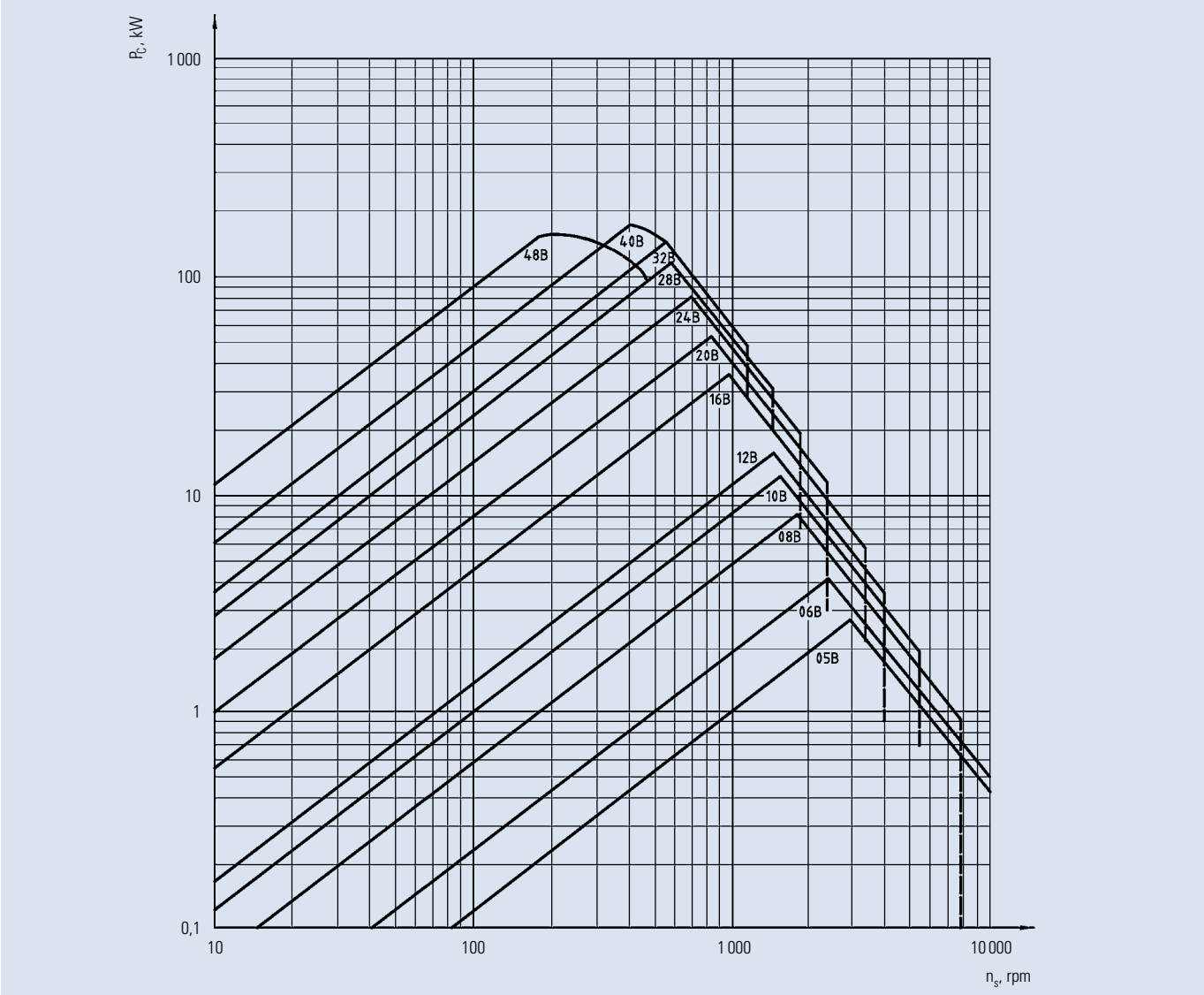

Figure 1: Typical power diagram for selection of simplex chains type B according to ISO 606, based on a sprocket with 19 teeth

P_c : Corrected power n_s : Speed of smaller sprocket

Annotation 1: The nominal values for the performance of duplex roller chains can be calculated by multiplying the P_C-value for simplex chains with the factor 1,7.

Annotation 2: The nominal values for the performance of triplex roller chains can be calculated by multiplying the P_C-value for simplex chains with the factor 2,5.

In case of different operating conditions, the value of the transmissible power "P" must be multiplied with the respective factor "k" in order to be able to select the appropriate chain from the diagram on the basis of the

Diagram power $P_C = P \cdot k$

The operating factor "k" takes into account the operating conditions of the drive, the number of teeth on the small sprocket, the transmission ratio and the shaft distance.

Longer wear lifes can be achieved by transmitting less power than shown in the diagram.

If roller chains are operated with very low speeds or idly (e.g. as load chains), the tensile force must be calculated according to the formula $Fd = F \cdot fy$.

The safety factor should be at least S = 7!

Power diagram for roller chains according to DIN 8188 (American type)

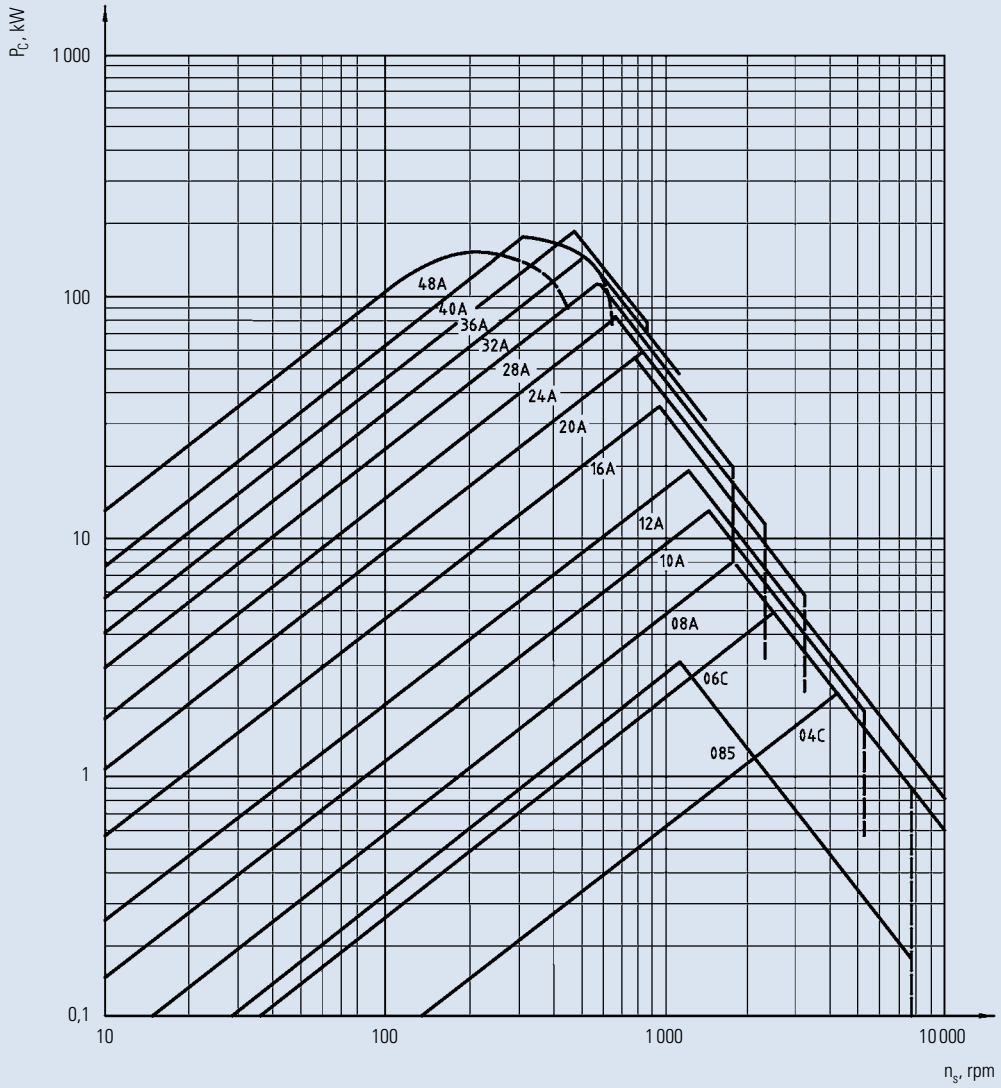

Figure 2: Typical power diagram for selection of simplex chains type A according to ISO 606, based on a sprocket with 19 teeth

P_c : Corrected power n_s : Speed of smaller sprocket

Annotation 1: The nominal values for the performance of duplex roller chains can be calculated by multiplying the P_C-value for simplex chains with the factor 1,7.

Annotation 2: The nominal values for the performance of triplex roller chains can be calculated by multiplying the P_C-value for simplex chains with the factor 2,5.

Power diagram for roller chains according to ISO 606 (American type, reinforced)

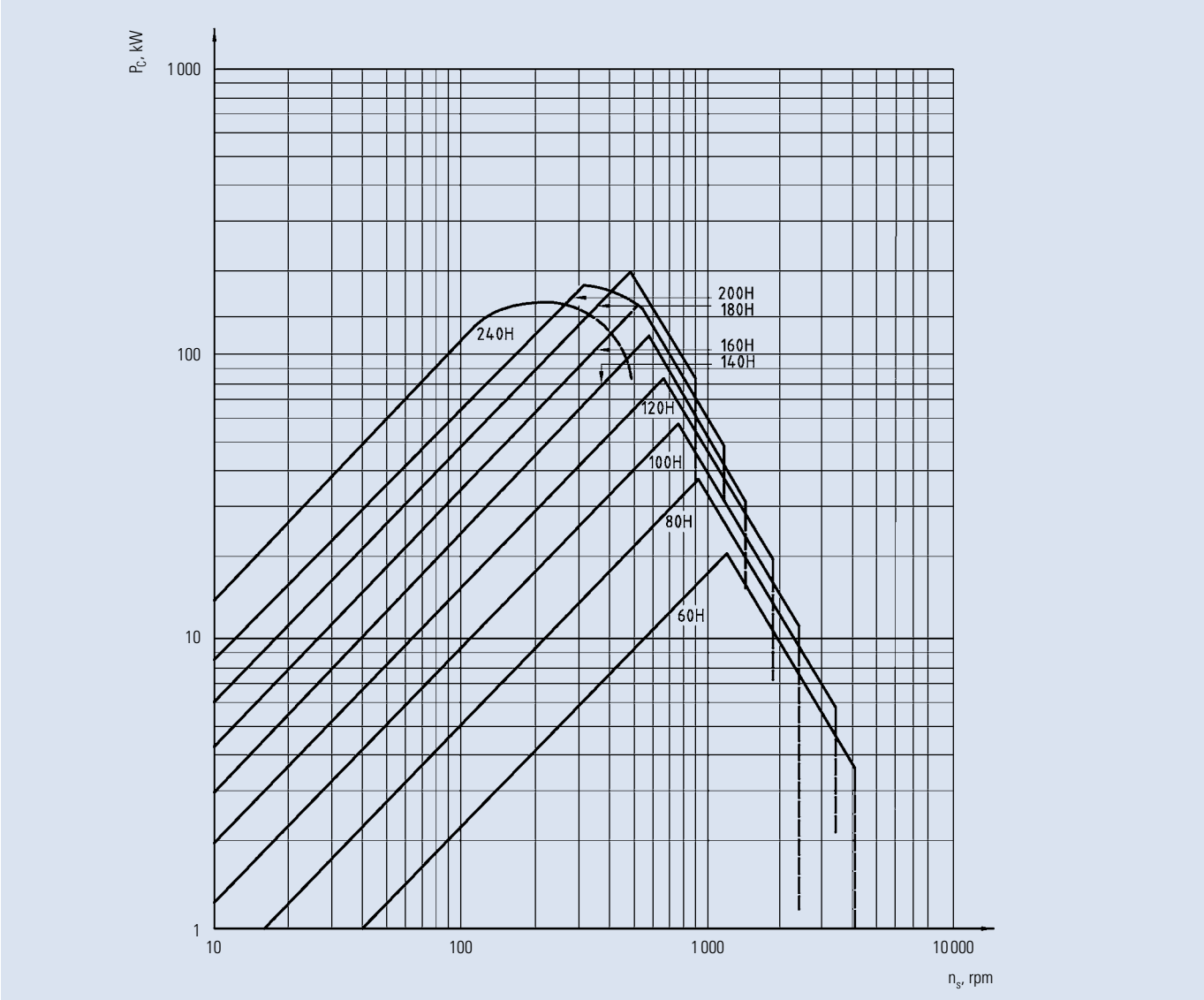

Figure 3: Typical power diagram for selection of reinforced simplex chains type A according to ISO 606, based on a sprocket with 19 teeth

P_c : Corrected power n_s : Speed of smaller sprocket

Annotation 1: The nominal values for the performance of duplex roller chains can be calculated by multiplying the P_C-value for simplex chains with the factor 1,7.

Annotation 2: The nominal values for the performance of triplex roller chains can be calculated by multiplying the P_C-value for simplex chains with the factor 2,5.

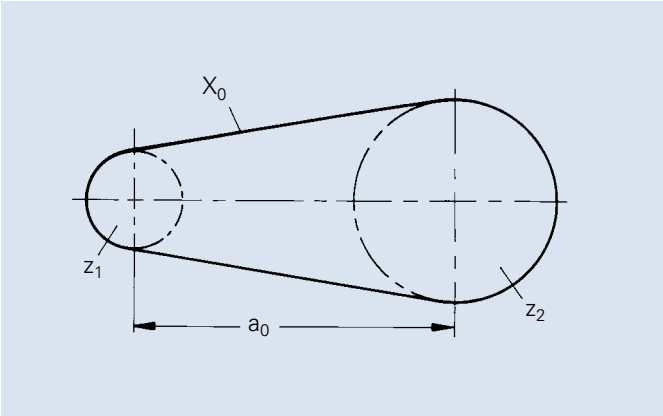

With the same number of teeth $z_1 = z_2$ the chain length is:

$$X_0 = 2\,\frac{a_0}{p} + z$$

With different numbers of teeth z_1 und z_2 the chain length is:

$$X_0 = 2\,\frac{a_o}{p} + \frac{z_1 + z_2}{2} + \frac{C\,p}{a_0}$$

X = Chain length in links
X_0 = Theoretical chain length
a = Shaft distance in mm
a_0 = Theoretical shaft distance
p = Pitch in mm
z_1 = Number of teeth on small sprocket
z_2 = Number of teeth on large sprocket
C = Coefficient from table

$$C = \left(\frac{z_2 - z_1}{2\,\pi}\right)^2$$

The calculated number of links must always be rounded up. In case of minor differences, one pitch should be added in order to avoid assembly difficulties. If the calculation results in an uneven number of chain links, one single cranked link (0,8 of breaking load) has to be mounted. In such cases it is recommended to select the next even number of links. Then the exact shaft distance can easily be calculated according to the detailed information on page 107.

Values for "C" $= \left(\frac{z_2 - z_1}{2\,\pi}\right)^2$

Example:

a_0 = 700 mm $\qquad z_1 = 19$
p = 19,05 mm $\qquad z_2 = 45$
C = 17,12 (for $z_2 - z_1 = 26$)

$$X_0 = 2\,\frac{a_0}{p} + \frac{z_1 + z_2}{2} + \frac{C \cdot p}{a_0}$$

$$X_0 = \frac{2 \times 700}{19{,}05} + \frac{19 + 45}{2} + \frac{17{,}12 \times 19{,}05}{700}$$

X_0 = 73,49 + 32 + 0,466 = 105,956

X = 106 links

$z_2 - z_1$	C	$z_2 - z_1$	C	$z_2 - z_1$	C	$z_2 - z_1$	C
1	0,025	41	42,58	81	166,19	121	370,86
2	0,101	42	44,68	82	170,32	122	377,02
3	0,228	43	46,84	83	174,50	123	383,22
4	0,405	44	49,04	84	178,73	124	389,48
5	0,633	45	51,29	85	183,01	125	395,79
6	0,912	46	53,60	86	187,34	126	402,14
7	1,24	47	55,95	87	191,73	127	408,55
8	1,62	48	58,36	88	196,16	128	415,01
9	2,05	49	60,82	89	200,64	129	421,52
10	2,53	50	63,33	90	205,18	130	428,08
11	3,07	51	65,88	91	209,76	131	434,69
12	3,65	52	68,49	92	214,40	132	441,36
13	4,28	53	71,15	93	219,08	133	448,07
14	4,96	54	73,86	94	223,82	134	454,83
15	5,70	55	76,62	95	228,61	135	461,64
16	6,48	56	79,44	96	233,44	136	468,51
17	7,32	57	82,30	97	238,33	137	475,42
18	8,21	58	85,21	98	243,27	138	482,39
19	9,14	59	88,17	99	248,26	139	489,41
20	10,13	60	91,19	100	253,30	140	496,47
21	11,17	61	94,25	101	258,39	141	503,59
22	12,26	62	97,37	102	263,54	142	510,76
23	13,40	63	100,54	103	268,73	143	517,98
24	14,59	64	103,75	104	273,97	144	525,25
25	15,83	65	107,02	105	279,27	145	532,57
26	17,12	66	110,34	106	284,61	146	539,94
27	18,47	67	113,71	107	290,01	147	547,36
28	19,86	68	117,13	108	295,45	148	554,83
29	21,80	69	120,60	109	300,95	149	562,36
30	22,80	70	124,12	110	306,50	150	569,93
31	24,34	71	127,69	111	312,09	151	577,56
32	25,94	72	131,31	112	317,74	152	585,23
33	27,58	73	134,99	113	323,44	153	592,96
34	29,28	74	138,71	114	329,19	154	600,73
35	31,03	75	142,48	115	334,99	155	608,56
36	32,83	76	146,31	116	340,84	156	616,44
37	34,68	77	150,18	117	346,75	157	624,37
38	36,58	78	154,11	118	352,70	158	632,35
39	38,53	79	158,09	119	358,70	159	640,38
40	40,53	80	162,11	120	364,76	160	648,46

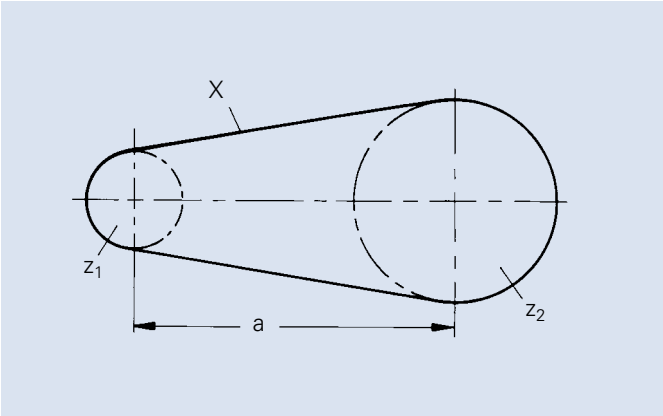

a = Shaft distance in mm
X = Chain length in links
p = Pitch in mm
z_1 = Number of teeth on small sprocket
z_2 = Number of teeth on large sprocket

The calculation of a chain length rarely results in an even number of links. Mostly, the result must be rounded up. In order to avoid a cranked link in the chain, an even number should be selected.

The exact shaft difference is calculated according to the following formulas:

With the same number of teeth $z_1 = z_2 = z$ the shaft distance is:

$$a = \frac{X - z}{2}\, p$$

With an uneven number of teeth $z_1 \neq z_2$ the shaft distance is:

$$a = p\,[2\,X - (z_1 + z_2)]\;\; B$$

The coefficient "B" is a function of $K = \frac{X - z_1}{z_2 - z_1}$ and can be taken from the following table.

Example:

X = 106 links z_1 = 19
p = 19,05 mm z_2 = 45

$$a = p\,[2\,x - (z_1 + z_2)]\;B$$

$$\frac{X - z_1}{z_2 - z_1} = \frac{106 - 19}{45 - 19} = \frac{87}{26} = 3{,}34615$$

The table shows a value B = 0,24825 for K = 3,2
and a value B = 0,24849 for K = 3,4

B must be calculated by means of interpolation.
The following applies:

$$\frac{\text{Difference K times table difference B}}{\text{Table difference K}}$$

$$B = 0{,}24825 + \frac{(3{,}34615 - 3{,}2) \times (0{,}24849 - 0{,}24825)}{3{,}4 - 3{,}2}$$

$$B = 0{,}24825 + \frac{0{,}14615 \times 0{,}00024}{0{,}2}$$

B = 0,24825 + 0,00017538 = 0,24843 (rounded up)

The exact shaft distance is

a = 19,05 (2 x 106 - 19 - 45) 0,24843

a = 700,4 mm

Coefficient "B"

K	B	K	B	K	B	K	B
13	0,24 991	2,7	0,24 735	1,54	0,23 758	1,26	0,22 520
12	990	2,6	708	1,52	705	1,25	443
11	988	2,5	678	1,50	648	1,24	361
10	986	2,4	643	1,48	588	1,23	275
9	983	2,3	602	1,46	524	1,22	185
8	978	2,2	552	1,44	455	1,21	090
7	970	2,1	493	1,42	381	1,20	0,21 990
6	958	2,0	421	1,40	301	1,19	884
5	937	1,95	380	1,39	259	1,18	771
4,8	931	1,90	333	1,38	215	1,17	652
4,6	925	1,85	281	1,37	170	1,16	526
4,4	917	1,80	222	1,36	123	1,15	390
4,2	907	1,75	156	1,35	073	1,14	245
4,0	896	1,70	081	1,34	022	1,13	090
3,8	883	1,68	048	1,33	0,22 968	1,12	0,20 923
3,6	868	1,66	013	1,32	912	1,11	744
3,4	849	1,64	0,23 977	1,31	854	1,10	549
3,2	825	1,62	938	1,30	793	1,09	336
3,0	795	1,60	897	1,29	729	1,08	104
2,9	778	1,58	854	1,28	662	1,07	0,19 848
2,8	758	1,56	807	1,27	593	1,06	564

K > 13 B = 0,25

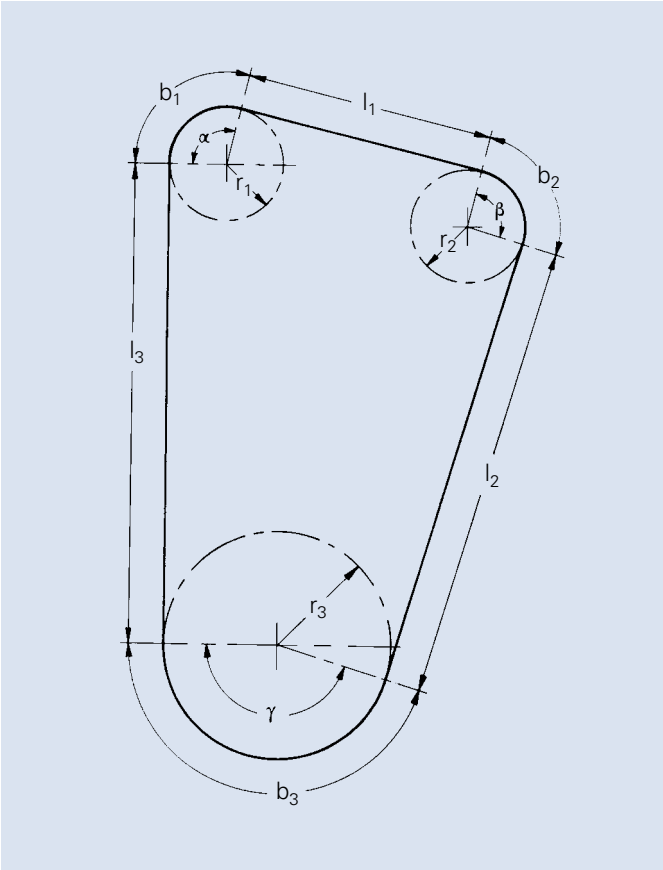

L = Chain length in mm
X = Chain length in links
p = Pitch in mm
$l_{1, 2, 3}$ = Tangent lengths in mm
$r_{1, 2, 3}$ = Pitch circle radiuses in mm
α, β, γ = Central angles in degrees
$b_{1, 2, 3}$ = Arc lengths in mm
= r_1 arc α, r_2 arc β, r_3 arc γ

Example: (see above drawing)

Chain pitch p = 15,875 mm

r_1 = 43,2 mm α = 104° l_1 = 188 mm
r_2 = 43,2 mm β = 93° l_2 = 345 mm
r_3 = 86,0 mm γ = 163° l_3 = 363 mm

$b_1 = r_1 \text{ arc } \alpha = 43{,}2 \times 1{,}8151 = 78{,}41$ mm
$b_2 = r_2 \text{ arc } \beta = 43{,}2 \times 1{,}6232 = 70{,}12$ mm
$b_3 = r_3 \text{ arc } \gamma = 86{,}0 \times 2{,}8449 = 244{,}66$ mm

$$L = b_1 + b_2 + b_3 + l_1 + l_2 + l_3$$
$$= 78{,}41 + 70{,}12 + 244{,}66 + 188 + 345 + 363$$
$$= 1289{,}19 \text{ mm}$$

$$X = \frac{L}{p} = \frac{1{,}289{,}19}{15{,}875} = 81{,}21 = \underline{\underline{82 \text{ links}}}$$

If a chain runs on several sprockets (as shown in the drawing), graphics will usually suffice to determine the chain length since this method is sufficiently accurate and considerably simpler than mathematical calculations. To begin with, the drive is drawn schematically, if possible on a scale of 1:1 or larger. Then tangents are drawn to the pitch circles, and the central angles of the circular arc spanned by the chain are determined.

For the respective arc values please refer to the table "arc lengths".

The chain length L can then be calculated by adding up the partial lengths.

$$L = l_1 + l_2 + l_3 + \ldots + b_1 + b_2 + b_3 \ldots$$
$$X = L/p$$

The result must always be rounded up, if possible to the next even number of links. Uneven numbers should be avoided!

Arc lengths for the radius r = 1

Central angle φ°	Arc length arc φ	Central angle φ°	Arc length arc φ	Central angle φ°	Arc length arc φ	Central angle φ°	Arc length arc φ
1	0,0175	46	0,8029	91	1,5882	136	2,3736
2	0,0349	47	0,8203	92	1,6057	137	2,3911
3	0,0524	48	0,8378	93	1,6232	138	2,4086
4	0,0698	49	0,8552	94	1,6406	139	2,4260
5	0,0873	50	0,8727	95	1,6580	140	2,4435
6	0,1047	51	0,8901	96	1,6755	141	2,4609
7	0,1222	52	0,9076	97	1,6930	142	2,4784
8	0,1396	53	0,9250	98	1,7104	143	2,4958
9	0,1571	54	0,9425	99	1,7279	144	2,5133
10	0,1745	55	0,9599	100	1,7453	145	2,5307
11	0,1920	56	0,9774	101	1,7628	146	2,5482
12	0,2094	57	0,9948	102	1,7802	147	2,5656
13	0,2269	58	1,0123	103	1,7977	148	2,5831
14	0,2443	59	1,0297	104	1,8151	149	2,6005
15	0,2618	60	1,0472	105	1,8326	150	2,6180
16	0,2793	61	1,0647	106	1,8500	151	2,6354
17	0,2967	62	1,0821	107	1,8675	152	2,6529
18	0,3142	63	1,0996	108	1,8850	153	2,6704
19	0,3316	64	1,1170	109	1,9024	154	2,6878
20	0,3491	65	1,1345	110	1,9199	155	2,7053
21	0,3665	66	1,1519	111	1,9373	156	2,7227
22	0,3840	67	1,1694	112	1,9548	157	2,7402
23	0,4014	68	1,1868	113	1,9722	158	2,7576
24	0,4189	69	1,2043	114	1,9897	159	2,7751
25	0,4363	70	1,2217	115	2,0071	160	2,7925
26	0,4538	71	1,2392	116	2,0246	161	2,8100
27	0,4712	72	1,2566	117	2,0420	162	2,8274
28	0,4887	73	1,2741	118	2,0595	163	2,8449
29	0,5061	74	1,2915	119	2,0769	164	2,8623
30	0,5236	75	1,3090	120	2,0944	165	2,8798
31	0,5411	76	1,3265	121	2,1118	166	2,8972
32	0,5585	77	1,3439	122	2,1293	167	2,9147
33	0,5760	78	1,3614	123	2,1468	168	2,9322
34	0,5934	79	1,3788	124	2,1642	169	2,9496
35	0,6109	80	1,3963	125	2,1817	170	2,9671
36	0,6283	81	1,4137	126	2,1991	171	2,9845
37	0,6458	82	1,4312	127	2,2166	172	3,0020
38	0,6632	83	1,4486	128	2,2340	173	3,0194
39	0,6807	84	1,4661	129	2,2515	174	3,0369
40	0,6981	85	1,4835	130	2,2689	175	3,0543
41	0,7156	86	1,5010	131	2,2864	176	3,0718
42	0,7330	87	1,5184	132	2,3038	177	3,0892
43	0,7505	88	1,5359	133	2,3213	178	3,1067
44	0,7679	89	1,5533	134	2,3387	179	3,1241
45	0,7854	90	1,5708	135	2,3562	180	3,1416

1. Example 1

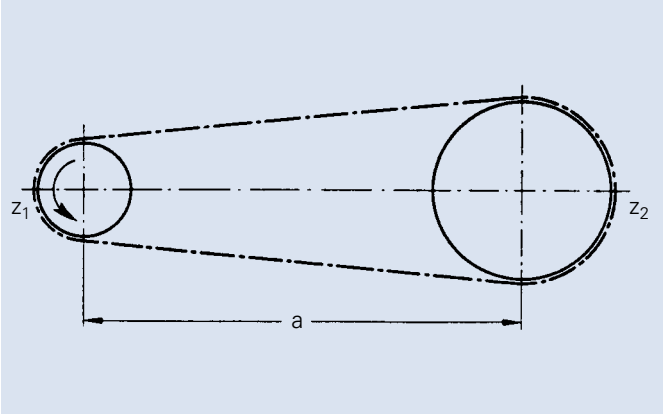

1.1 Given are:

(Refer to the drawing in example 1, which illustrates this worked example)

Input power	$P = 0{,}16$ kW
Input speed	$n_1 = 36$ rpm
Output speed	$n_2 = 10{,}75$ rpm
Transmission ratio	$i = \frac{n_1}{n_2} = 3{,}35$
Mode of drive	electric gear motor
Driven machine	Conveyor (with uneven charging)
Approx. shaft centre distance	$a_0 \approx 530$ mm

1.2 Selection of sprockets

Selected number of teeth on drive sprocket: $z_1 = 17$
Number of teeth on driven sprocket: $z_2 = i \cdot z_1$; $z_2 = 3{,}35 \cdot 17 = 57$

1.3 Calculations and selection of chain

1.3.1 Correction of chain

Correction factor for operating conditions: $k = f_y \cdot f_i \cdot f_z$ ($f_y = 1{,}4$; $f_i = 1$; $f_z = 1{,}55$)
Correction factor for number of teeth: $k = 1{,}4 \cdot 1 \cdot 1{,}55$
Corrected power: $P_C = P \cdot k$
$P_C = 0{,}16 \text{ kW} \cdot 2{,}17$
$P_C = 0{,}35$ kW

1.3.2 Selection of chain

For $P_C = 0{,}35$ kW and $n_1 = 36$ rpm the roller chain 10A-1 or 10B-1 is selected from the power diagrams (see pages 103 - 103-105).
The chain pitch p for a chain 10A-1 or 10B-1 is 15,875 mm (according to ISO 606).

1.3.3 Chain length

Calculation of number of links

$$X_0 = 2\,\frac{a_0}{p} + \frac{z_1 + z_2}{2} + \frac{C \cdot p}{a_0}$$

Here C = 40,529 for $z_2 - z_1 = 57 - 17 = 40$

Result:

$$X_0 = \frac{530}{15{,}875} + \frac{17 + 57}{2} + \frac{40{,}529 \cdot 15{,}875}{530}$$

$X_0 = 104{,}99$

Selected number of links X = 106 (i.e. the next higher even number).

1.3.4 Chain speed

$$v = \frac{n \cdot z \cdot p}{60\,000} = \frac{37 \cdot 17 \cdot 15{,}875}{60\,000} = 0{,}16 \text{ m/s}$$

1.4 Maximum shaft centre distance of sprockets

Maximum shaft centre distance:
$a = p\,[2\,X - (z_1 + z_2)]\,B$

Results: $B = 0{,}24567$ for $\frac{X - z_1}{z_2 - z_1} = \frac{106 - 17}{57 - 17} = 2{,}23$ (interpolated)

This is the value for the shaft centre distance:
$a = 15{,}875\,[\,2 \cdot 106 - (17 + 57)\,]\,0{,}24567$
$a = 538{,}2$ mm

1.5 Lubrication

For v = 0,16 m/s and for a chain type 10A-1 or 10B-1 the diagram (page 92) shows the lubrication range I. Consequently, the simplest lubrication method, i.e. regular manual oil lubrication, will be sufficient in this case.

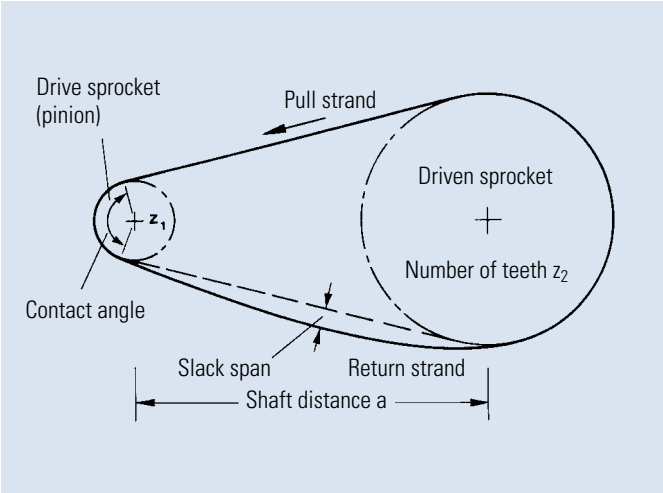

General information

Slack span of the return strand for horizontal drives approx. 1 % to 2 % of the shaft distance.
Chain contact angle on the drive sprocket 120° if possible (always the case when $a > d_o2 - d_o1$), at least 90° for higher number of teeth (z = 25).

The shaft distance is normally 30 times p - 50 times p.

$$\text{minimum } a_{min} > \frac{d_{k1} + d_{k2}}{2}$$

With longer shaft distances, heavy drives or vertical shafts, the chain weight of the pull strand and the return strand must be supported by means of chain support wheels, support rollers or guide strips. The number of teeth on the drive sprocket should be 19 if possible. The minimum number of teeth on a sprocket is 6 (d_o = 2 p), which is then only suitable for manual operation because of the polygon effect!

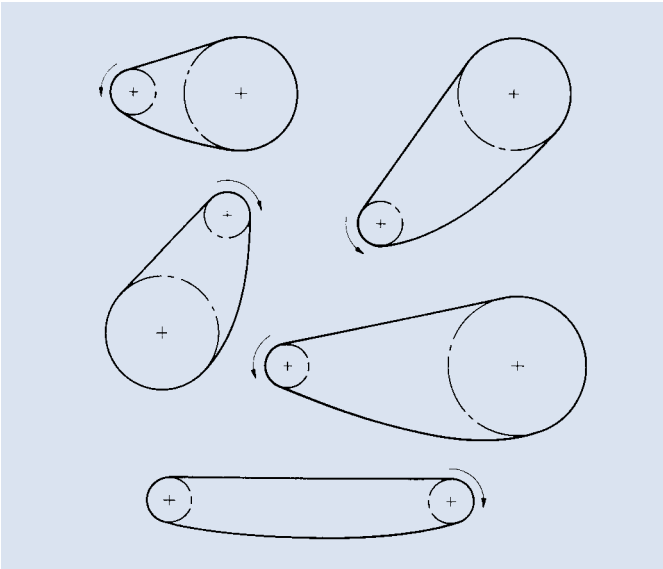

Chain drive configurations (assessment)

Favourable

In order to guarantee trouble-free operation and a long wear life, the correct chain run for the different drive configurations has to be selected. A horizontal drive or a configuration with a drive inclined by up to 60° is common and favourable. In this case the pull strand should be at the top and the return strand at the bottom.

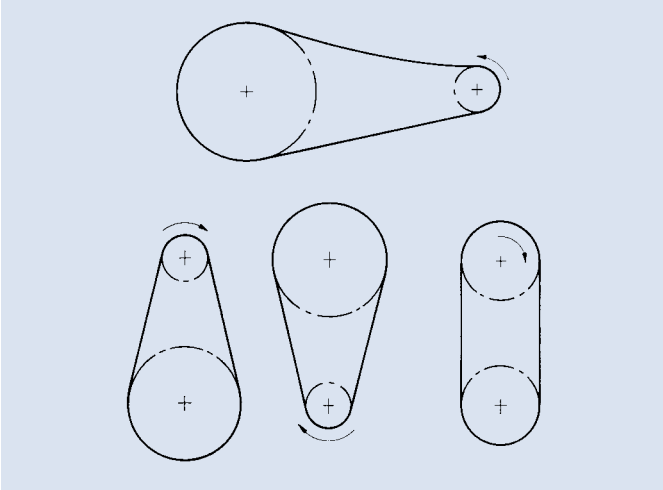

Less favourable

With horizontal drives and normal shaft distances the return strand may also be at the top.

Vertical drives should have the smaller sprocket at the top. The chain must be kept rather tight to stop it from getting slack and jumping off the lower sprocket. A minor deviation from the vertical position will improve the running conditions. It might be necessary to mount a jockey sprocket.

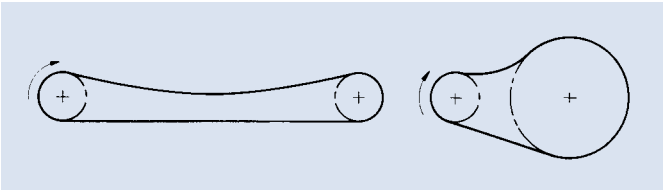

Please avoid if possible

In case of short or long shaft distances the pull strand should be at the top if possible!

Jockey sprockets should have approximately three teeth in mesh with the return strand of the chain. On the basis of the selected number of teeth, the maximum speed (see page102 “ratio between n and p“) must not be exceeded.

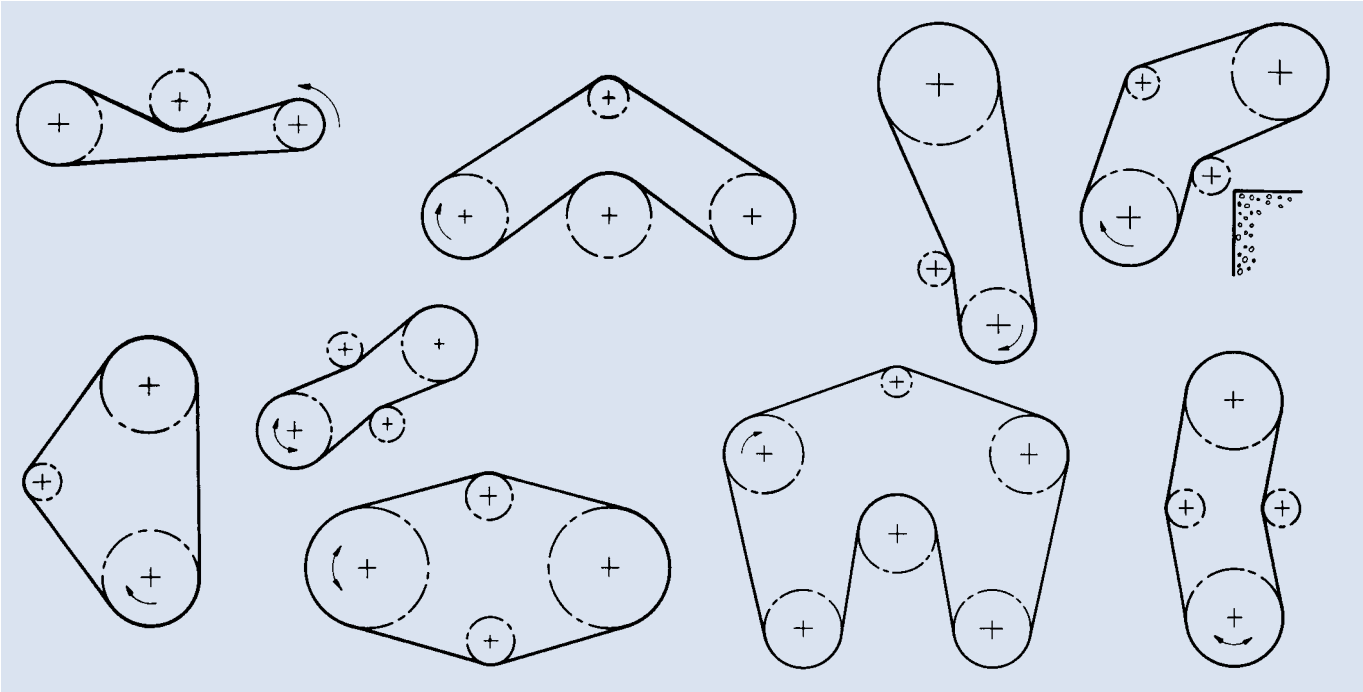

Instead of jockey sprockets, support wheels or deflexion pulleys, plastic guide rails might be advantageous in some cases to support or deflect a chain.

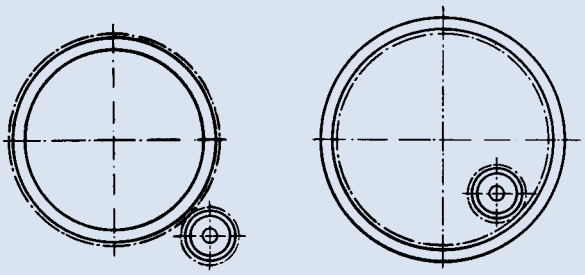

a) as outer sprocket b) as inner sprocket

Roller chain instead of a sprocket for large wheel bodies, drums, revolving platforms etc.

Driving of roller conveyors

a) by means of alternate individual chain strands driving from roller to roller;
b) by means of a circulating chain with lantern gear toothing sprockets (p. 71).

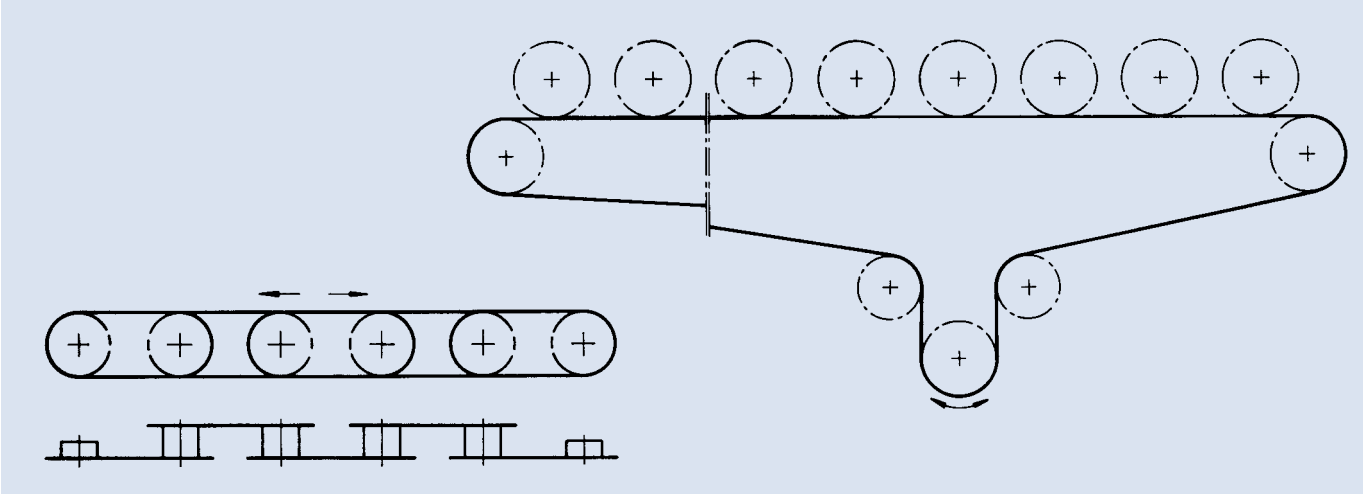

General information

A chain drive needs relatively little maintenance, if the correct chain was selected, if it was installed correctly and if it is lubricated according to the recommended procedure.

However, the chain should be protected against dirt and adverse environmental influences. A chain protection box helps to prevent dirt, averts accidents and absorbs noise.

In case of protected drives maintenance comprises a regular (annual) cleaning of the oil container and a renewal of the oil filling.

Open running chain drives must be cleaned every 3 to 6 months.

Shorter periods may be necessary, if the chains are very dirty. When cleaning the chain drives, wheel alignment and chain tension should be checked as well.

Cleaning

First of all, in order to clean a chain drive properly, the external rough dirt must be removed by means of a hard or steel brush. Subsequently, the chain is rinsed in cleaning solvent, paraffin or diesel oil.

Furthermore, it is important to clean the inner parts of the chain. Therefore the chain is placed into paraffin, diesel oil or another solvent for approximately 24 hours in order to soak the dirt in the joints as well as the hardened lubrication remnants.

If the chain is moved several times back and forth in the solvent bath, joints will be thoroughly cleaned.

After the chain has been properly cleaned it should not make anymore scratching noises when the links are moved; if it does, the remaining dirt in the joints will form a grinding compound with the lubricating agent, which would destroy the chain very quickly.

Repair

Subsequently the chain should be carefully examined for defective links, which must be replaced, if necessary.

A damaged outer link is replaced with a connecting link. Outer links are riveted into endless chains.

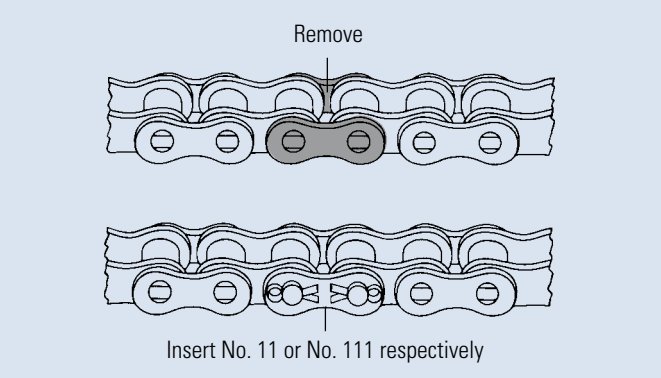

If an inner link or a roller is broken, the two adjoining links must also be removed; they must then be replaced by an inner link with two connecting links.

With endless chains outer links are to be used. However, if a chain looks really worn, it should be replaced by a new one.

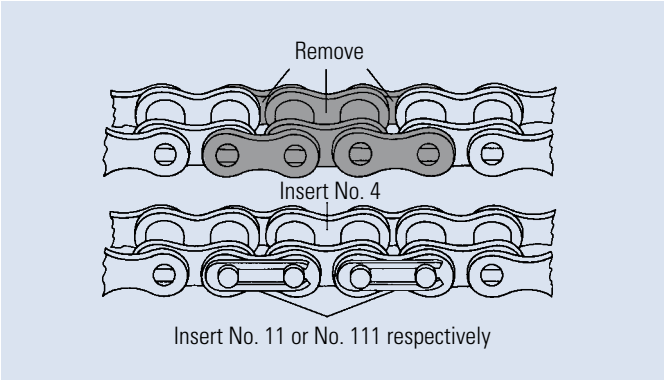

Relubrication

Thorough relubrication is to be carried out immediately after cleaning and, if necessary, repair of the chain. It is important to ensure that quality and viscosity of the lubricant comply with the operating conditions of the chain drive, e.g. temperature and velocity (please refer to pages 91 ff.). It is not recommended to add just a few drops from the oil can or simply douse the chain, since the oil will not reach the chain links, i.e. those parts which actually have to be lubricated. Even if the inner and outer plates are oiled, this will by no means guarantee a proper lubrication of the inner parts such as pins and bushings.

For perfect lubrication the chain is placed into a container with liquidised special chain lubricant heated up to 120° C. The chain is left in the lubricant bath until it has reached its temperature, before it is then taken out. Excess lubricant must be allowed to drip off since it will not aid the lubrication of the chains links if it sticks to the outer plates.

However, in practice, such perfect lubrication will rarely be possible. In this case an excellent engine lubricating oil should be used according to the recommendations on page 97. Please ensure that the lubricant will actually reach the links, which are to be lubricated.

Sprockets

The sprocket teeth must be thoroughly cleaned before the chain is finally put back on. It is particularly important to remove dirt sediments, which would stretch the chain, from the bottom of the tooth gaps. Subsequently, the sprocket must be examined in order to determine, if the teeth are worn too much. In case of excessive wear or hooked-shaped teeth, sprockets should be replaced with new ones.

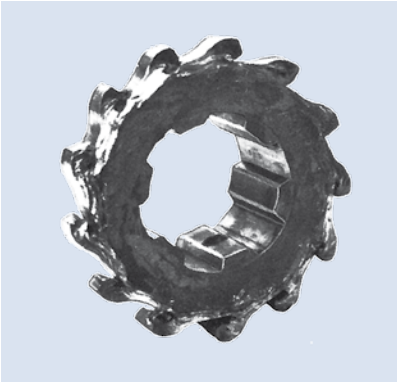

It is not recommended to simply turn a worn sprocket around so that it works in reverse running direction. New sprockets are to be checked according to the specifications on page 78.

Please note that a new chain should never be placed around a worn sprocket, because this will definitely reduce the lifecycle of the chain.

Shortening by 1 link

a) Even number of links

up to a pitch of 19,05 mm

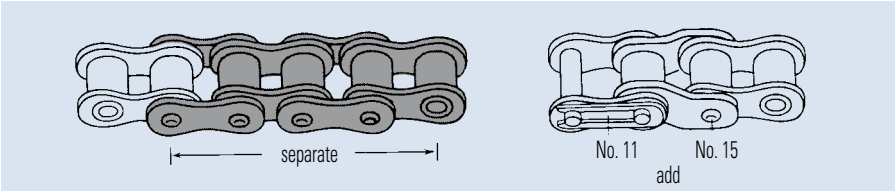

Pitch as of 25,4 mm

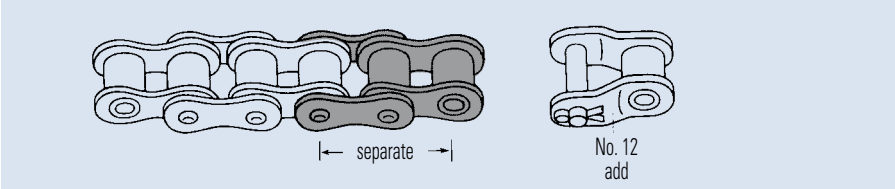

b) Odd number of links

up to a pitch of 19,05 mm

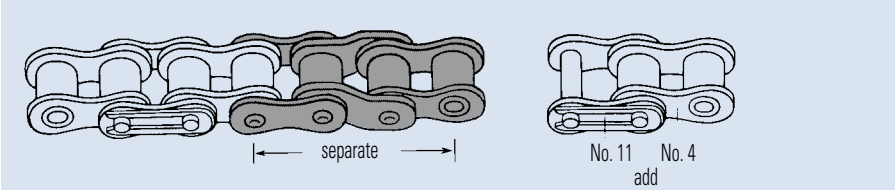

Pitch as of 25,4 mm

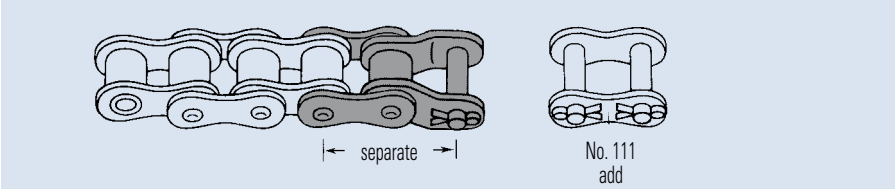

Extending by 1 link

a) Even number of links

up to a pitch of 19,05 mm

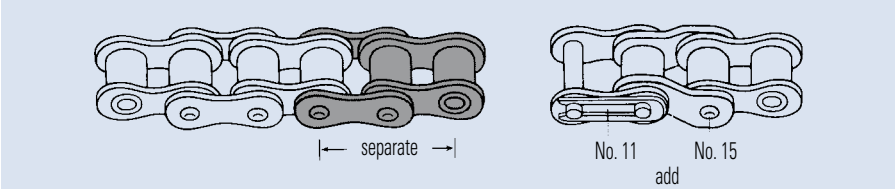

Pitch as of 25,4 mm

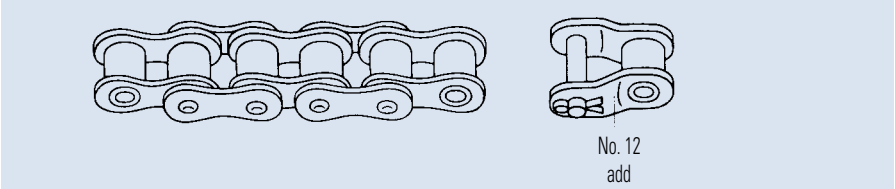

b) Odd number of linksl

up to a pitch of 19,05 mm

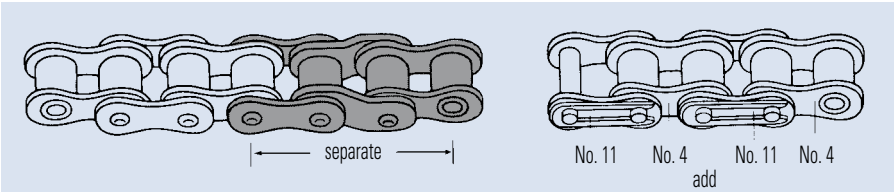

Pitch as of 25,4 mm

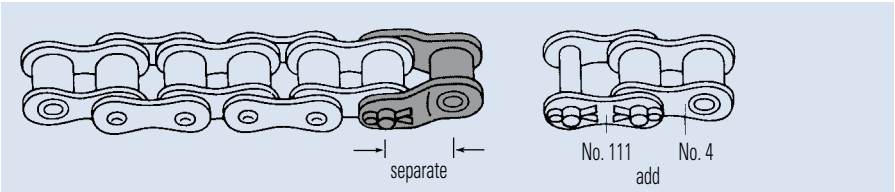

Please note: When cranked links are used, roller chains may only have 80 % of the tensile strength.

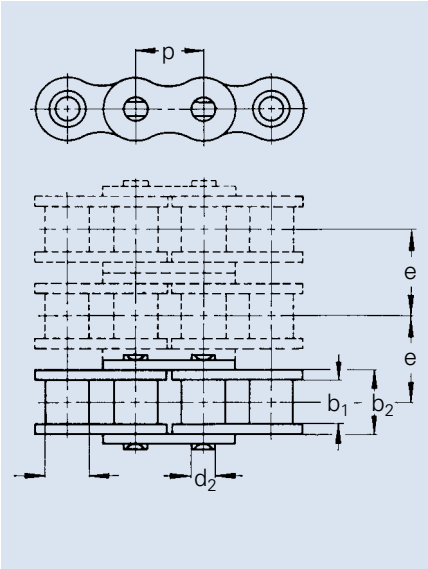

In order to avoid errors or misunderstandings and thus time-consuming queries please supply the following details:

Number of chains

- Chain No.

If this is unknown e.g. when ordering replacement chains, please supply a short part of the chain as a sample (at least one inner link) or, alternatively, state the following dimensions according to the adjoining drawing:

1. Pitch p
2. Inner width b_1
3. Inner link width b_2
4. Roller and bushing diameter as well as
5. Pin diameter for Galle chains d_1
6. Shoulder diameter for Galle chains d_2
7. Transverse pitch (only for multiplex roller chains)
8. Please state, if simplex, duplex or multiplex chain designs are required

For replacement chains it is sufficient to state the main dimensions p, b_1 and d_1 as well as e for multiplex chains. If a chain is to be extended or repaired, all the dimensions shown in the drawing must be supplied.

Please note: In case of replacements it is important to replace both sprockets as well as chains!

Length of chain in meters or links

1.) When ordered by length in metres (e.g. 5 m) the end links are always inner links. Connecting links must be ordered separately.

2.) When ordered by number of links:

Orders for chains with even number of links

	chain is supplied:
ready to be installed	including one connecting link
open*	end links = inner links including one single cranked link
endless	riveted

Orders for chains with odd number of links

	chain is supplied:
ready to be installed*	(up to a pitch of p = 19,05 mm = ¾“) including one double cranked link and one connecting link (up to a pitch of p = 25,4 mm = 1“) including one single cranked link
open	end links = inner links
endless*	riveted (including one cranked link)

* When cranked links are used, roller chains may only have 80 % of the breaking load. Avoid if possible!

What will the chain be used for?

Please inform us on the application area of the chain. Only then will we be able to offer you the perfect chain for the application you have in mind – and you will benefit from our long-time experience!

Parallel running chains

Chains envisaged for parallel running operation are matched for length, pre-stretched and marked at extra cost.

It is important to clearly stipulate this requirement when ordering!

In special cases measured chains can be supplied at extra cost.

In order to avoid errors or misunderstandings and thus time-consuming queries please supply the following details:

Number of chains

- Chain No. of the basic chain

Type of attachment links

(e.g. A, B, C, D, E or F); for other special designs please state if single-sided or double sided attachments are required.

Attachment spacing T of special links

in (preferably even) multiples of pitch p

If attachments are also available on the inner link, the attachment spacing can be arranged in any way. In case of an odd number (e.g. T = 3 p) the attachment is alternated on the outer and inner rings. If inner link attachments are not available, an odd number spacing can only be made possible by mounting a cranked connecting link No. 12 or a double cranked link No. 15. In this case the chain may only have 80 % of the breaking load!

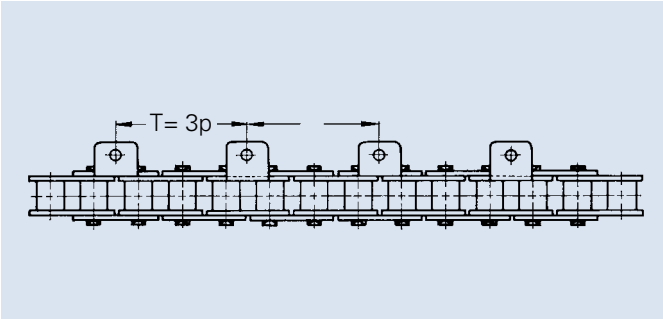

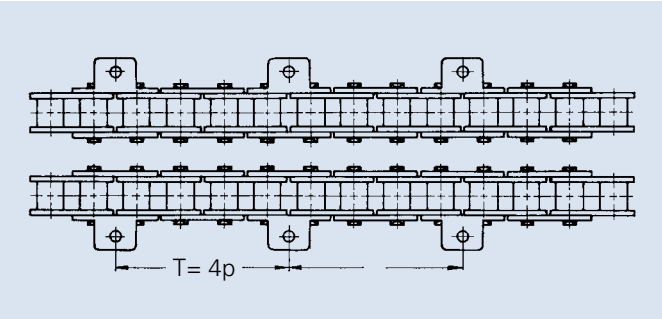

Length of chain in metres and links

a) When ordered by length in metres, the end links are always inner links. Connecting links must be ordered separately.

b) When ordered by a certain number of links, this number should be divisible by the distance T of the special links (e.g. chain length 176 links, T = 4 p, i.e. every 4th link is a special link; the chain includes 176 : 4 = 44 special links).

   If the chain length cannot be a multiple of T, but has to be longer or shorter for design reasons, this fact must be clearly stated as: "Does not work out even!" In such a case the distance T at the end of the chain will be alternately longer or shorter.

   Chains with an even number of links will be delivered with a connecting link and are ready for assembly. With a distance of T = 2 p (each outer link is a special link) the connecting link is supplied in the respective special design. With a distance of T = 4 p and more the connecting link will be supplied in the standard design.

Please note: When cranked links are used, roller chains may only have 80% of the breaking load. Avoid if possible!

Matched or pre-stretched special chains

Parallel running chain strands used for transport and conveying purposes are often required to have highly matching opposite attachments. At extra cost we will supply the appropriately matched chain strands and mark them accordingly.

When ordering your chain, please state clearly:
Please supply matched, pre-stretched and marked chain strands!

The installation of guide rails is recommended to help support and guide chains with long span lengths.

Application

What is to be conveyed or driven by the chain? (If an existing chain drive is to be replaced, please state which one!)

.....

.....

Chain drive

Please underline where applicable and enter the respective data if necessary!

Power requirement
(max. power to be transmitted)
power output P = ... hp/kW torque M = ... Nm tensile force F = ... N

Drive, type, and performance
..... / ..... hp/kW
(e.g. electric motor, internal combustion engine / 2, 4, 6 cylinders etc.)

Chain loading
operation period ..... hours/day
❍ regular ❍ cyclic ❍ impact ❍ alternating direction ..... times per hour
❍ interruption (re-start) approx ..... times per hour

Centrifugal mass for impact compensation
❍ existing ❍ possible ❍ not existing ❍ not possible

---

a = ... mm
shaft distance is adjustable by ..... mm / not adjustable
❍ jockey sprocket ❍ clamping rail ❍ clamping spring ❍ automatic chain tensioner

---

Ambient influences
❍ nothing in particular ❍ dust ❍ fibres ❍ sand ❍ humidity
temperatures up to ..... °C corrosion caused by .....

Chain protection box
❍ dust proof ❍ not dust proof ❍ installation not possible
❍ chain unprotected ❍ chain protected by engine / machine housing

Lubrication
❍ not permitted ❍ manually (occasionally) ❍ drip feed ❍ oil bath ❍ pressure circulation

---

Sprockets

	Driving sprocket	Driven sprocket
Speed or **planned transmission ratio**	n_1 = ... rpm	n_2 = ... rpm
	i = ... :	
Sprocket diameter Largest possible incl. chain	max. = ... mm Ø	max. = ... mm Ø
Sprocket width Largest possible incl. chain	max. = ... mm	max. = ... mm
Sprocket design	.....	.....
Hub bore (shaft Ø)	d_1 = ... mm Ø	d_2 = ... mm Ø
Hub length	L_1 = ... mm	L_2 = ... mm
Hub design One-sided: standard Double-sided: symmetrical or asymmetrical	.....	.....
Installation on the shaft (groove sizes according to DIN)	.....	.....

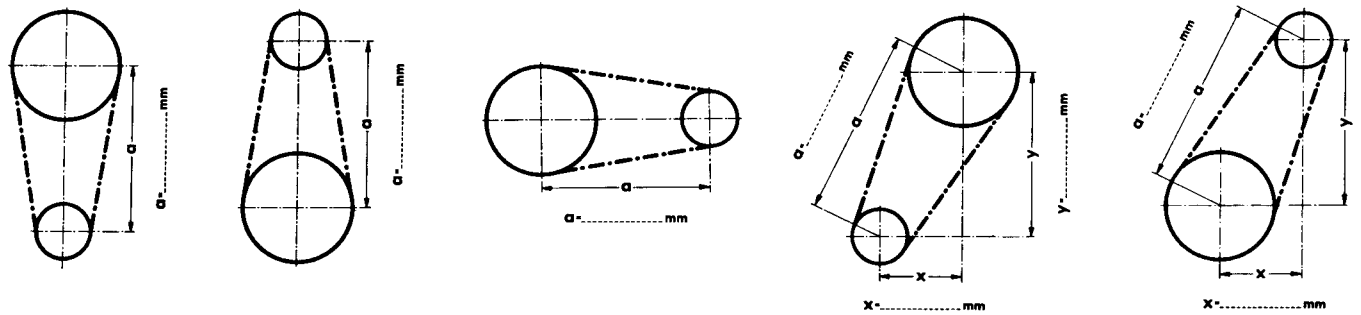

Please enter the dimensions of the requested drive into the drawing. The driving wheel designation should be T. Please indicate the rotation direction by an arrow and in case of alternating rotation direction by a double arrow (◄►).

DIN - designation	Wippermann-designation	Design	Page
	2DH I	Top-plate conveyor chain	47
03	440	Roller chain	10
04	445	„	10, 43
	D 445	„	11
04C-1	ASA 25	Bush chain	13
05B-1	450	Roller chain	10, 35, 36, 43, 48, 49
	450 RF	„ stainless steel	30, 38
	453	„	10
	454	„	10
05B-2	D 450	Roller chain	11
	D 450 RF	„ stainless steel	31
05B-3	T 450	„	12
06B-1	455 GL	„	10, 16, 24, 35 - 37, 43, 44
	06B-1 MA	„ maintenance-free	22, 24
	455 RF	„ stainless steel	30, 37, 38
	455 TL	Roller chain	33
06C-1	ASA 35	Bush chain	13, 43
	ASA 35 RF	Roller chain stainless steel	30
06B-2	455 GL-2	„	11, 16, 44
	455 GL-2 MA	„ maintenance-free	22, 24
	06B-2 GL MA	„ „	22, 24
	D 455 RF	„ stainless steel	31
06B-3	T 455 RF	„	32
06C-2	ASA 35-2	Bush chain	14
	ASA 35-2 RF	„	31
06B-3	455 GL-3	Roller chain	12, 16
	455 GL-3 MA	„ maintenance-free	22, 24
	06B 3 MA	„ „	22, 24
06C-3	ASA 35-3	Bush chain	15
08A-1	ASA 40	Roller chain	13, 35, 36, 43
	08A-1 MA	„ maintenance-free	23, 43
	ASA 40 RF	„ stainless steel	30, 38
081	331	Roller chain	10, 35, 36
	331 RF	„ stainless steel	30, 38
	332	„	10, 35, 35
	332 RF	„ stainless steel	30, 38
082	110	„	10
083	17	„	10
	18	„	33
	460	„	33
	461	„	10
08B-1	462	„	10, 35 - 37, 39, 40, 43, 44
	08B-1 MA	Roller chain maintenance-free	22, 24
	462 GL	„	16
	462 GL MA	„ maintenance-free	24
	462 RF	„ stainless steel	30, 37, 38
	462 RF GL	„	30
	462 RF MA	„ maintenance-free	29
08A-2	ASA 40-2	Roller chain	14
	08A-2 MA	„ maintenance-free	23
	ASA 40-2 RF	„ stainless steel	31
08B-2	D 462	„	11, 44
	08B-2 MA	„ maintenance-free	22
	462 GL-2	„	16
	462 GL-2 MA	„ maintenance-free	24
	D 462 RF	„ stainless steel	31
	D 462 RF MA	„ maintenance-free	29
08A-3	ASA 40-3	„	15
	08A-3 MA	„ maintenance-free	23
08B-3	T 462	„	12
	08B-3 MA	„ maintenance-free	22
	462 GL-3	„	16
	462 GL-3 MA	„ maintenance-free	24
08B-3	T 462 RF	„ stainless steel	32
	T 462 RF MA	„ maintenance-free	29
10A-1	ASA 50	„	13, 35, 36, 43
	ASA 50 H	„ reinforced	13
	ASA 50 HX	„ „	19
	10A-1 MA	„ maintenance-free	23, 43
	500	„	10

DIN - designation	Wippermann-designation	Design	Page
10B-1	501	„	10, 35 - 37, 39, 40, 43, 44
	10B-1 MA	„ maintenance-free	22, 25, 35 - 40, 43, 44
	501 GL	„	16
	501 GL MA	„ maintenance-free	24
	501 RF	„ stainless steel	30, 37, 38
	501 RF GL	„ „	30
	501 RF MA	„ maintenance-free	29
10A-2	ASA 50-2	„	14
	10A-2 MA	„ maintenance-free	23
10B-2	D 501	„	11, 44
	10B-2 MA	„ maintenance-free	22
	501 GL-2	„	16
	501 GL-2 MA	„ maintenance-free	24
	D 501 RF	„ stainless steel	31
	D 501 RF MA	„ maintenance-free	29
10A-3	ASA 50-3	„	15
	10A-3 MA	„ maintenance-free	23
10B-3	T 501	„	12
	10B-3 MA	„ maintenance-free	22
	501 GL-3	„	16
	501 GL-3 MA	„ maintenance-free	24
10B-3	T 501 RF	„ stainless steel	32
	T 501 RF MA	„ maintenance-free	29
12A-1	ASA 60	„	13, 35, 36, 43
	12A-1 MA	„ maintenance-free	23, 43
	ASA 60 GL	„	16
	ASA 60 H	„ reinforced	13
	ASA 60 HX	„ „	19
	ASA 60 HGL	„ „	16
	ASA 60 RF	„ stainless steel	30
12B-1	513	„	10, 35 - 37, 39, 40, 43, 44
	12B-1 MA	„ maintenance-free	22, 26, 27, 43
	513 GL	„	16
	513 GL MA	„	24
	513 RF	„ stainless steel	30, 37, 38
	513 RF GL	„ „	30
	513 RF MA	„ maintenance-free	29
	513 SF RF	Accumulator chain stainless steel	48
	513 SF	Accumulator chain	48
	513 SF MA	„ maintenance-free	26, 27
12A-2	ASA 60-2	Roller chain	14
	12A-2 MA	„ maintenance-free	23
	ASA 60 GL-2	„	16
	ASA 60-2 RF	„ stainless steel	31
12B-2	D 513	„	11, 44
	12B-2 MA	„ maintenance-free	22
	513 GL-2	„	16
	513 GL-2 MA	„ maintenance-free	24
	D 513 RF	„	30
	D 513 RF MA	„ maintenance-free	29
	D 513 SF	Accumulator chain	49, 49
	D 513 SF MA	„ maintenance-free	23, 27
12A-3	ASA 60-3	Roller chain	15
	12A-3 MA	„ maintenance-free	23
	ASA 60 GL-3	„	16
12B-3	T 513	„	12
	12B-3 MA	„ maintenance-free	22
	513 GL-3	„	16
	513 GL-3 MA	„ maintenance-free	24
12B-3	T 513 RF	„ stainless steel	32
	T 513 RF MA	„ maintenance-free	29
	T 513 SF RF	Accumulator chain stainless steel	48, 49
	T 513 SF	„	48, 49
	T 513 SF MA	„ maintenance-free	26, 27
	515	Roller chain	33
	517	„	33
	540	„	33
	546 b	„	33
	547	„	33
16A-1	ASA 80	„	13, 35, 36, 43

DIN - designation	Wippermann-designation	Design		Page
	ASA 80 H	„	reinforced	13
	ASA 80 HX	„	„	19
	16A-1 MA	„	maintenance-free	23, 43
16B-1	548	„		10, 35 - 37, 39, 40, 43, 44
	16B-1 MA	„	maintenance-free	22, 35 - 40, 43, 44
	548 GL	„		16
	548 GL MA	„	maintenance-free	24
	548 GLS	„		16
	548 GLS MA	„	maintenance-free	24
	548 GLX	„	reinforced	18
	548 RF	„	stainless steel	30, 37, 38
	548 RF GL	„	„	30
	548 RF GLS	„	„	30
	548 SF RF	Accumulator chain	„	48, 49
	548 SF	„		48, 49
	548 SF MA	„	maintenance-free	26, 27
16A-2	ASA 80-2	Roller chain		14
	16A-2 MA	„	maintenance-free	23
16B-2	D 548	„		11, 44
	16B-2 MA	Roller chain	maintenance-free	22
	548 GL-2	„		16
	548 GLS-2	„		16
	548 GL-2 MA	„	maintenance-free	24
	D 548 RF	„	stainless steel	31
	D 548 RF MA	„	maintenance-free	29
	D 548 SF	Accumulator chain		48, 49
	D 548 SF MA	„	maintenance-free	26, 27
16A-3	ASA 80-3	Roller chain		15
	16A-3 MA	„	maintenance-free	23
16B-3	T 548	„		12
	16B-3 MA	Roller chain	maintenance-free	22
	548 GL-3	„		16
	548 GLS-3	„		16
	548 GL-3 MA	„	maintenance-free	24
16B-3	T 548 RF	„	stainless steel	32
	T 548 RF MA	„	maintenance-free	29
	T 548 SF RF	Accumulator chain	stainless steel	48, 49
	T 548 SF	„		48, 49
	T 548 SF MA	„	maintenance-free	26, 27
20A-1	ASA 100	Roller chain		13, 43
	ASA 100 H	„	reinforced	13
	ASA 100 HX	„	„	19
	20A-1 MA	„	maintenance-free	23, 43
	552	„		10, 43
	552 MA	„	maintenance-free	22, 43
20B-1	563	„		10, 35 - 37, 43
	20B-1 MA	„	maintenance-free	22, 35 - 37, 43
	563 GL	„		16
	563 GL MA	„	maintenance-free	24
	563 GLX	„	reinforced	18
20A-2	ASA 100-2	„		14
	20A-2 MA	„	maintenance-free	23
20B-2	D 563	„		11
	20B-2 MA	„	maintenance-free	22
	563 GL-2	„		16
	563 GL-2 MA	„	maintenance-free	24
20A-3	ASA 100-3	„		15
	20A-3 MA	„	maintenance-free	23
20B-3	T 563	„		12
	20B-3 MA	„	maintenance-free	22
	563 GL-3	„		16
	563 GL-3 MA	„	maintenance-free	24
	577	„		33, 43
24A-1	ASA 120	„		13, 43
	ASA 120 H	„	reinforced	13
	ASA 120 HX	„	„	15
	24A-1 MA	„	maintenance-free	23, 43
24B-1	596	„		10, 35 - 37, 43
	24B-1 MA	„	maintenance-free	22, 35, 37, 43
	596 GL	„		16

DIN - designation	Wippermann-designation	Design		Page
	596 GL MA	„	maintenance-free	24
	596 R	„		18
	596 SX	„		18
24A-2	ASA 120-2	„		14
	24A-2 MA	„	maintenance-free	23
24B-2	D 596	„		11
	24B-2 MA	„	maintenance-free	22
	596 GL-2	„		16
	596 GL-2 MA	„	maintenance-free	24
24A-3	ASA 120-3	„		15
	24A-3 MA	„	maintenance-free	23
24B-3	T 596	„		12
	24B-3 MA	Roller chain	maintenance-free	22
	596 GL-3	Roller chain		16
	596 GL-3 MA	„	maintenance-free	24
28A-1	ASA 140	„		13
	ASA 140 H	„	reinforced	13
	ASA 140 HX	„	„	19
28B-1	613	„		10, 35, 36, 43
28A-2	ASA 140-2	„		14
28B-2	D 613	„		11
28A-3	ASA 140-3	„		15
28B-3	T 613	„		12
32A-1	ASA 160	„		13
	ASA 160 H	„	reinforced	13
	ASA 160 HX	„	„	19
	ASA 160 VS	„		18
32B-1	652	„		10, 35, 36, 43
32A-2	ASA 160-2	„		14
	ASA 160-2 VS	„		18
32B-2	D 652	„		11
32A-3	ASA 160-3	„		15
32B-3	T 652	„		12
40A-1	ASA 200	„		13
	ASA 200 H	„	reinforced	13
	ASA 200 HX	„	„	19
40B-1	671	„		10
	671 SX	„		18
	671 VX	„		18
40A-2	ASA 200-2	„		14
40B-2	D 671	„		11
40A-3	ASA 200-3	„		15
40B-3	T 671	„		12
48B-1	679	„		10
48B-2	D 679	„		11
48B-3	T 679	„		12
208 B	713	„		34, 41, 42
	208 B MA	„	maintenance-free	25, 41, 42
208 B	713 RF	„	stainless steel	34, 41, 42
210 B	717	Roller chain		34, 41, 42
	210 B MA	„	maintenance-free	25, 41, 42
210 B	717 RF	„	stainless steel	34, 41, 42
212 B	722	„		34, 41, 42
	212 B MA	„	maintenance-free	25, 41, 42
212 B	722 RF	„	stainless steel	34, 41, 42
	722 SF RF	Accumulator chain	„	48, 49
	722 SF	„		48, 49
	722 SF MA	„	maintenance-free	26, 27
216 B	728	Roller chain		34, 41, 42
	216 B MA	Roller chain	maintenance-free	25, 41, 42
216 B	728 RF	„	stainless steel	34, 41, 42
	728 SF RF	Accumulator chain	„	48, 49
	728 SF	„		48, 49
	728 SF MA	„	maintenance-free	26, 27
220 B	734	Roller chain		34, 41, 42
	220 B MA	„	maintenance-free	25, 41, 42
	6144	Roller chain	agricultural	33
S 62	6146	„	„	37
	01105	Hollow pin chain		17
	01462	„		17

DIN - designation	Wippermann-designation	Design	Page
	01463	„	17
	01500	„	17
	01501	„	17
	01513	„	17
	01589	„	17
	01598	„	17
	01650	„	17
	01650 RF	„ stainless steel	17
	1110	Inverted tooth chain with bushings	55
	1112	„	55
	1114	„	55
	1115	„	55
	06-015/20A	High performance inverted tooth chain	56
	06-025/030/035J	„	56
	08-015/020A	„	56
	08-025/030/035J	„	56
	08-050/65J	„	56
	10-025/035/040J	„	56
	10-050/065J	„	56
	12-035/040/050J	„	56
	12-065/075J	„	56
	16-050/065/075J	„	56
	16-100/125J	„	56
	24-065/075/100J	„	56
	24-125/150J	„	56
	32-100/115/135J	„	56
	32-150/180J	„	56
	HD06-015/020A	High performance inverted tooth chain type serie HD	57
	HD06-025/030/040J	„	57
	HD06-050/060J	„	57
	HD08-015/020A	„	57
	HD08-025/030/040J	„	57
	HD08-050/065/075J	„	57
	HD08-100J	„	57
	HD12-030/035/040J	„	57
	HD12-050/065/085J	„	57
	HD12-100/125/150J	„	57
	HD12-200J	„	57
	HD16-040/050/065J	„	57
	HD16-075/100/125J	„	57
	HD16-150/200J	„	57
	HP06-015/020A	High performance inverted tooth chain type serie HP	58
	HP06-025/030/040J	„	58
	HP06-050/065J	„	58
	HP08-015/025A	„	58
	HP08-025/030/040J	„	58
	HP08-050/065/075J	„	58
	HP08-100/125/150J	„	58
	HP12-020/025/030J	„	58
	HP12-035/040/050J	„	58
	HP12-065/085/100J	„	58
	HP12-125/150/200J	„	58
	HP16-040/050/065J	„	58
	HP16-075/100/125J	„	58
	HP16-150/200J	„	58
	200	Bush chain	47
	203	„	47
	206	„	47
	209	„	47
	212	„	47
	215	„	47
	218	„	47
LL 0822	F 122	Leaf chain	51
LL 0844	F 124	„	51
LL 0866	F 126	„	51
LL 1022	F 152	„	51
LL 1044	F 154	„	51
	FU 154	„ 1	52

DIN - designation	Wippermann-designation	Design	Page
LL 1066	F 156	„	51
	FU 156	„	52
	FU 156 S	„	52
	FU 158	„	52
LL 1222	F 192	„	51
LL 1244	F 194	„	51
	F 194 S	„	51
	FU 194	„	52
LL 1266	F 196	„	51
	F 196 S	„	51
	FU 196	„	52
	FU 196 S	„	52
LL 1622	F 252	„	51
LL 1644	F 254	„	51
	FU 254	„	52
LL 1666	F 256	„	51
	FU 256	„	52
	FU 258	„	52
LL 2022	F 312	„	51
LL 2044	F 314	„	51
LL 2066	F 316	„	51
LL 2422	F 382	„	51
LL 2444	F 384	„	51
	F 384 U	„	52
LL 2466	F 386	„	51
	F 386 U	„	52
	F 388 U	Leaf chain	52
	F 501 U	„	52
LL 3222	F 502	„	51
LL 3244	F 504	„	51
	F 504 U	„	52
LL 3266	F 506	„	51
	F 506 U	„	52
LL 3288	F 508	„	51
LL 3110	F 501	„	51
LL 4022	F 632	„	51
LL 4044	F 634	„	51
LL 4066	F 636	„	51
LL 4088	F 638	„	51
	F 508 U	„	52
	F 634 U	„	52
	F 636 U	„	52
	F 638 U	„	52
LH 1023	BL 523	„	54
LH 1034	BL 534	„	54
LH 1044	BL 544	„	54
LH 1046	BL 546	„	54
LH 1066	BL 566	„	54
LH 1623	BL 823	„	54
LH 1634	BL 834	„	54
LH 1644	BL 844	„	54
LH 1646	BL 846	„	54
LH 1666	BL 866	„	54

Conditions/Symptoms	Possible cause	What to do
One-sided wear on chains and sprockets	1. Shafts not parallel, sprocket and pinion not aligned	1. Realign
Wear on inner plates or on sides of sprocket teeth	1. Sprocket and pinion not aligned or shaft wobble	1. Realign sprockets
Wear on tooth heads	1. Chain elongation 2. Tooth error	1. Replace chain 2. Replace pinion and sprocket
Wear on tooth flanks, sprockets	1. Low material strength	1. Exchange for hardened sprockets
Wear on outer plates	1. Chain striking an obstruction	1. Make sure chain is not obstructed
Chain vibrates with high frequency	1. Eccentricity or sprocket wobble 2. Broken chain roller	1. Replace sprockets 2. Replace chain links or chain
Premature elongation	1. Insufficient lubrication or wrong chain size	1. Increase oil supply and check chain size
Rust-coloured discolouration of chain and pins	1. Insufficient lubrication	1. Improve lubrication
Chain jumps off sprocket	1. Excess chain slack 2. Chain riding too high on sprocket teeth due to chain wear	1. Adjust shaft centre distance or jockey sprocket 2. Replace chain
Broken chain parts	1. Drive overloaded 2. Excess chain slack and chain jumps off sprocket 3. Chain striking solid object 4. Chain speed too high 5. Imprecise toothing on the sprockets 6. Insufficient lubrication 7. Corrosion	1. Select another chain or avoid overload 2. Regular check and adjustment of shaft centre distance 3. Make sure chain is not obstructed 4. Check chain dimensioning 5. Change sprockets 6. Improve and increase lubrication 7. Avoid corrosion or use chains made of stainless material (please enquire)
Excessive noise	1. Chain striking an obstruction 2. Insufficient lubrication 3. Missing or broken rollers 4. Misalignment 5. Chain jumps off sprocket	1. Make sure chain is not obstructed 2. Improve lubrication 3. Replace chain or defective parts 4. Align shafts and sprockets 5. Re-adjust shaft centre distance

Country	Adress	
England	**Transmission Developments Co (G.B.) Ltd.** Dawkins Road, Hamworthy, Poole Dorset BH15 4HF	Phone: +44 (0) 1202-675555 Fax: +44 (0) 1202-677466 E-mail: sales@transdev.co.uk Internet: www.transdev.co.uk
Finland	**SKS-mekaniikka Oy** PL 122 FIN-01721 Vantaa	Phone: +358 (0) 20-76461 Fax: +358 (0) 20-7646824 E-mail: mekaniikka@sks.fi Internet: www.sks.fi
France	**Prud'homme** Transmissions 25, Chemin d´Aubervilliers F-93203 Saint-Denis Cedex	Phone: +33 (0) 148-114600 Fax: +33 (0) 148-344949 E-mail: info@prudhomme-trans.com Internet: www.prudhomme-trans.com
Greece	**MAS Michael Sofikitis & Son S.A.** 295 Monastiriou str. GR-54628 Thessaloniki	Phone: +30 (0) 2310-553443 Fax: +30 (0) 2310-551439 E-mail: sofikitis@the.forthnet.gr
Italy	**Kuhn W. S.r.l.** Via E. Mattei 84/13 I-40138 Bologna	Phone: +39 (0) 51-531584 Fax: +39 (0) 51-531611 E-mail: info@kuhnw.it Internet: www.kuhnw.it
The Netherlands	**K&W Transmissies B.V.** Asfaltstraat 14 NL 8211 AC Lelystad	Phone: +31 (0) 320-247370 Fax: +31 (0) 320-246594 E-mail: info@wippermann.nl Internet: www.wippermann.nl
Norway	**LM maskin as** Fernanda Nissensgt. 3 N-0484 Oslo	Phone: +47 23-392250 Fax: +47 22-222190 E-mail: firmapost@lm-maskin.no Internet: www.lm-maskin.no
Austria	**KATENA Stahlgelenkketten Handelsges. m.b.H** Jedlersdorfer Platz 7 A-1210 Wien	Phone: +43 (0) 1-2921071 Fax: +43 (0) 1-2929762 E-mail: office@katena.at Internet: www.katena.at
Sweden	**Ingenjörsfirman Kedjeteknik AB** Baragatan 2 SE-21228 Malmö	Phone: +46 (0) 40-181000 Fax: +46 (0) 40-932332 E-mail: info@kedjeteknik.se Internet: www.kedjeteknik.se
Switzerland	**C. Plüss & Co. AG** Oberdorfstr. 64 CH-8600 Dübendorf	Phone: +41 (0) 44-8248800 Fax: +41 (0) 44-8248818 E-mail: service@pluss.com Internet: www.pluss.com
Slovenia **Serbia, Croatia** **Bosnia-Herzegovina** **Montenegro, Macedonia**	**BELL d.o.o.** Ptujska Cesta 13 SI 2204 Miklavz na Dravskem polyu	Phone: +386 (0) 2-6296920 Fax: +386 (0) 2-6292120 E-mail: info@bell.si Internet: www.bell.si
Spain	**Comercio Industria y Distribución, S.L** C.T.M. Ctra. Villaverde-Vallecas, km. 3,6 Nave S8 - Local 9 E-28053 Madrid **Delegacion Norte** Kaukarreka Bidea, 3 P.109 (Pol.Asua-Berri) E-48950 Erandio (Bizkaia) **Delegacion Cataluña** **Suministros Y Cadenas, S.L.** Pol. Ind. Sur - c/ Industria, s/n. Nave 3, Parcela 445 E-08754 El Papiol (Barcelona)	Phone: +34 (0) 91-5072838 Fax: +34 (0) 91-5072773 E-mail: cid@cid.es Internet: www.cid.es Phone: +34 (0) 91-4536029 Fax: +34 (0) 91-4535762 Phone: +34 (0) 91-67308-67 Fax: +34 (0) 91-67308-61
Turkey	**EKINIS TARIM MAKAINALARI** **TIC ve SAN A.Ş.** Karaköy Meydani, Tünel Caddesi Percemli sk., No. 4/1-2-3 Karaköy 34420 Istanbul - Türkiye	Phone: +90 (0) 212-2521921 Phone: +90 (0) 212-2455069 Fax: +90 (0) 212-2441134 E-mail: ekinis@ekinis.com Internet: www.ekinis.com

1 WIPPERMANN jr. GmbH Direkt

Service-Stützpunkt
WIPPERMANN jr. GmbH Direkt
Im Obrock 153
D-32278 Kirchlengern

Phone: +49 (0) 52 23 - 76 33 - 30
Fax: +49 (0) 52 23 - 76 33 - 38

E-mail: direkt@wippermann.com

2 Donald Mertner

Donald Mertner
Industrievertretungen
Johannesweg 17b
D-33397 Rietberg

Phone: +49 (0) 52 44 - 90 698 - 09
Fax: +49 (0) 52 44 - 90 698 - 10
Mobil: +49 (0) 1 71 - 6 20 31 93

E-mail: donald.mertner@freenet.de

3 Ing. Michael Topf

Ing. Michael Topf
Industrievertretungen
Rheinstraße 7
D-15732 Eichwalde

Phone: +49 (0) 30 - 67 53 97 - 83
Fax: +49 (0) 30 - 67 53 97 - 84
Mobil: +49 (0) 1 72 - 3 06 44 69

E-mail: michael.topf@t-online.de

4 ATS Antriebstechnik

ATS Antriebstechnik
Dipl. Ing. (FH) Helmar Sperl
Schaddeler Dreieck Nr.40
D-04668 Großbothen

Phone: +49 (0) 3 43 84 - 7 33 - 41
Fax: +49 (0) 3 43 84 - 7 33 - 42
Mobil: +49 (0) 1 72 - 9 44 46 40

E-mail: ats-sperl@t-online.de

5 Siegfried Niethammer

Siegfried Niethammer
Industrievertretungen
Storchenweg 12
D-91220 Schnaittach

Postfach 2
D-91218 Schnaittach

Phone: +49 (0) 91 53 - 92 81 - 0
Fax: +49 (0) 91 53 - 87 75
Mobil: +49 (0) 1 71 - 7 79 16 97

E-mail: info@niethammer-kette.de

6 Rauhut GmbH

Rauhut GmbH
Industrievertretungen
Luitpoldstraße 1
D-82319 Starnberg

Postfach 2170
D-82311 Starnberg

Phone: +49 (0) 81 51 - 90 889 - 0
Fax: +49 (0) 81 51 - 90 889 - 13

E-mail: info@rauhut-gmbh.com

7 hohmann GmbH

hohmann GmbH
Industrievertretungen
Eltinger Fußweg 2/2
D-71229 Leonberg

Postfach 1765
D-71207 Leonberg

Phone: +49 (0) 71 52 - 3 31 13 - 0
Fax: +49 (0) 71 52 - 3 31 13 - 10

E-mail: info@hohmann-iv.de

8 Ing. Büro Wittke

Ing. Büro Wittke
Inhaber Jan-Dirk Wittke
Industrievertretungen
Eppenhauser Str. 161 L
D-58093 Hagen

Phone: +49 (0) 23 31 - 3 06 59 - 38/39
Fax: +49 (0) 23 31 - 3 06 59 - 41

E-mail: ingbuero.wittke@t-online.de

9 Intest Industrietechnik GmbH

Intest Industrietechnik GmbH
Stefansbecke 11
D- 45549 Sprockhövel

Phone: +49 (0) 23 39 - 91 44 - 0
Fax: +49 (0) 23 39 - 91 44 - 91

E-mail: intest@intest.de

10 TechnIQ Ltd. & Co. KG

TechnIQ Ltd. & Co. KG
An der Strusbek 8A
D-22926 Ahrensburg

Phone: +49 (0) 41 02 - 22 12 - 22
Fax: +49 (0) 41 02 - 22 12 - 20

E-mail: info@techniq.de

Adress	Wippermann jr. GmbH Delsterner Straße 133 58091 Hagen Postfach 4020 58040 Hagen
Phone	+49 (0) 2331 - 782 - 0
Fax	+49 (0) 2331 - 782 - 356
Homepage	www.wippermann.com
E-mail	info @ wippermann.com

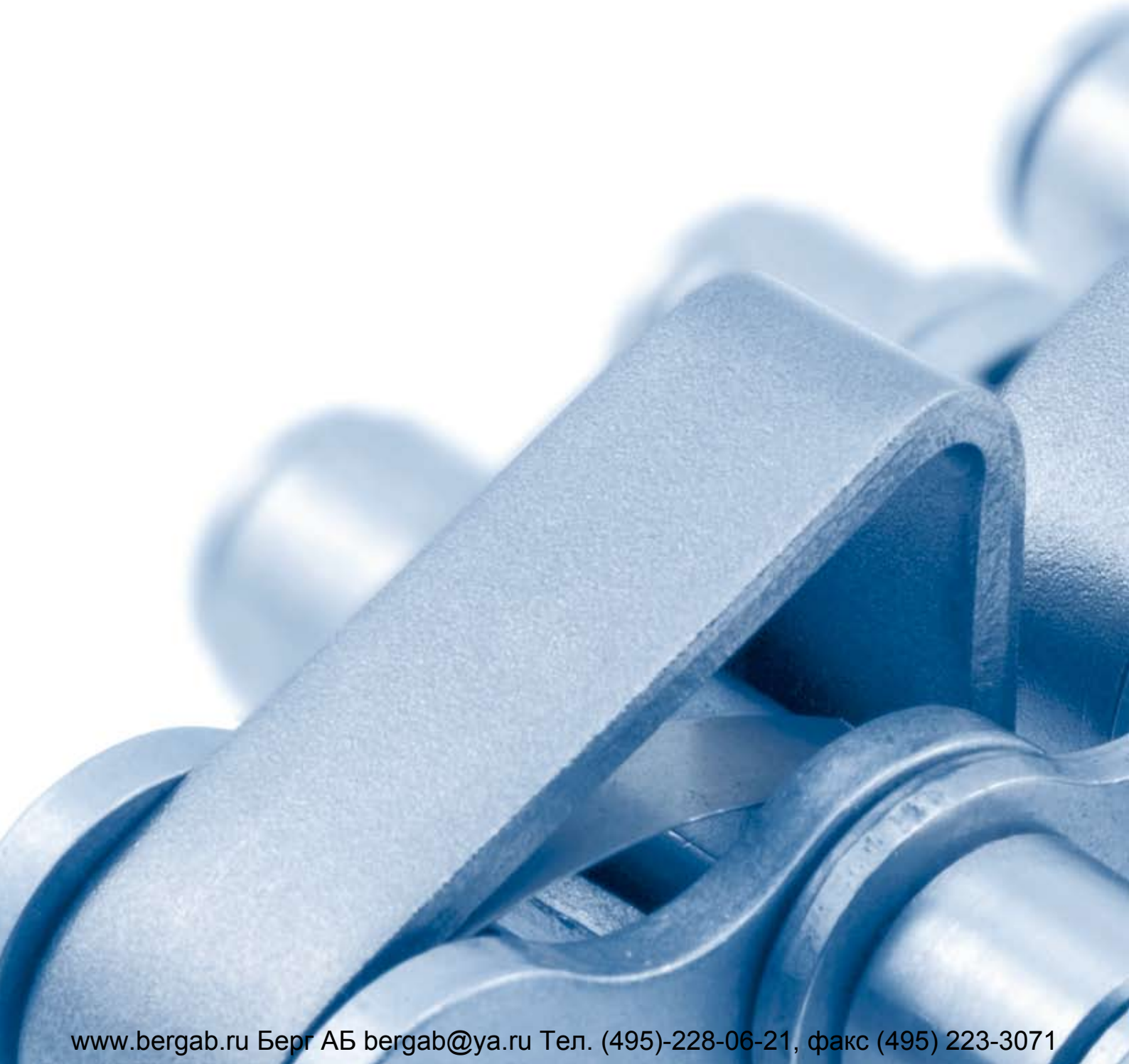

www.bergab.ru Берг АБ bergab@ya.ru Тел. (495)-228-06-21, факс (495) 223-3071